INCH-POUND

MIL-M-38510/540B
20 April 1989
SUPERSEDING
MIL-M-38510/540A
17 April 1985

MILITARY SPECIFICATION

# MICROCIRCUITS, DIGITAL, N-CHANNEL, SILICON GATE MONOLITHIC 16-BIT MICROPROCESSOR

This specification is approved for use by all Departments and Agencies of the Department of Defense.

## 1. SCOPE

1.1 Scope. This specification covers the detail requirements for a monolithic N-channel, silicon gate microprocessor. Two product assurance classes and a choice of case outline/lead finish are provided for each type, and are reflected in the complete Part or Identifying Number (PIN).

1.2 PIN. The PIN shall be in accordance with MIL-M-38510.

1.2.1 Device types. The device types shall be as follows:

| Device type | Clock frequency | Circuit |
|---|---|---|
| 01 | 4 to 6.0 MHz | 16-bit, fixed instruction microprocessor |
| 02 | 4 to 8.0 MHz | 16-bit, fixed instruction microprocessor |
| 03 | 4 to 10.0 MHz | 16-bit, fixed instruction microprocessor |

1.2.2 Device class. The device class shall be the product assurance level as defined in MIL-M-38510.

1.2.3 Case outlines. The case outlines shall be designated as follows:

| Letter | Case outline (see MIL-M-38510, appendix C) |
|---|---|
| T | See figure 1, (68-pin, 1.080" x 1.080" x .345"), pin grid array |
| Y | D-13 (64-lead, 3.240" x .920" x .225"), dual-in-line package |
| Z | C-7 (68-terminal, .962" x .962" x .120"), leadless chip carrier package |

Beneficial comments (recommendations, additions, deletions) and any pertinent data which may be of use in improving this document should be addressed to: Rome Air Development Center (RBE-2), Griffiss AFB, NY 13441, by using the self-addressed Standardization Document Improvement Proposal (DD Form 1426) appearing at the end of this document or by letter.

AMSC N/A FSC 5962
DISTRIBUTION STATEMENT A. Approved for public release; distribution is unlimited.

1.3 Absolute maximum ratings.

| | |
|---|---|
| Supply voltage range ($V_{CC}$ - GND) - - - - - | -0.3 V dc to +7.0 V dc |
| Voltage on any pin (referenced to ground) - | -0.3 V dc to +7.0 V dc |
| Storage temperature range - - - - - - - - - - | -65°C to +150°C |
| Maximum power dissipation ($P_D$) at maximum clock frequency - - - - - - - - - - - - - - | 1.68 W |
| Lead temperature (soldering, 5 seconds) - - | +270°C |
| Maximum junction temperature ($T_J$) 1/ - - - | +150°C |
| Thermal resistance, junction-to-case ($\theta_{JC}$): | |
| Case T - - - - - - - - - - - - - - - - - - - | 15°C/W 2/ |
| Cases Y and Z - - - - - - - - - - - - - - - - | See MIL-M-38510, appendix C |

1.4 Recommended operating conditions.

| | |
|---|---|
| Supply voltage range - - - - - - - - - - - - | 4.75 V dc minimum to 5.25 V dc maximum |
| Minimum high level input voltage ($V_{IH}$): | |
| Logic inputs - - - - - - - - - - - - - - - - | 2.0 V dc |
| Maximum low level input voltage ($V_{IL}$): | |
| Logic inputs - - - - - - - - - - - - - - - - | 0.8 V dc |
| Frequency of operation: | |
| Device type 01 - - - - - - - - - - - - - - - | 4.0 to 6.0 MHz |
| Device type 02 - - - - - - - - - - - - - - - | 4.0 to 8.0 MHz |
| Device type 03 - - - - - - - - - - - - - - - | 4.0 to 10.0 MHz |
| Case operating temperature range ($T_C$) - - - | -55°C to +110°C |
| Clock rise time ($t_r$)- - - - - - - - - - - - - | 10 ns maximum |
| Clock fall time ($t_f$)- - - - - - - - - - - - - | 10 ns maximum |

2. APPLICABLE DOCUMENTS

2.1 Government documents.

2.1.1 Specifications, standards, and handbooks. The following specifications, standards, and handbooks form a part of this document to the extent specified herein. Unless otherwise specified, the issues of these documents are those listed in the issue of the Department of Defense Index of Specifications and Standards (DODISS) and supplement thereto, cited in the solicitation (see 6.2).

SPECIFICATION

MILITARY

MIL-M-38510 - Microcircuits, General Specification for.

STANDARD

MILITARY

MIL-STD-883 - Test Methods and Procedures for Microelectronics.

(Unless otherwise indicated, copies of federal and military specifications, standards, and handbooks are available from the Naval Publications and Forms Center, (ATTN: NPODS), 5801 Tabor Avenue, Philadelphia, PA 19120-5099.)

2.2 Order of precedence. In the event of a conflict between the text of this document and the references cited herein (except for related associated detail specifications, specification sheets, or MS standards), the text of this document takes precedence. Nothing in this document, however, supersedes applicable laws and regulations unless a specific exemption has been obtained.

1/ Maximum junction temperature shall not be exceeded except for allowable short duration burn-in screening conditions in accordance with method 5004 of MIL-STD-883.

2/ When a thermal resistance value is included in MIL-M-38510, appendix C, it shall supersede the value stated herein.

3. REQUIREMENTS

3.1 Detail specification. The individual item requirements shall be in accordance with MIL-M-38510, and as specified herein.

3.2 Design, construction, and physical dimensions. The design, construction, and physical dimensions shall be as specified in MIL-M-38510, and herein.

3.2.1 Terminal connections. The terminal connections shall be as specified on figure 2.

3.2.2 Functional block diagram and input and output signals. The functional block diagram and input and output signals shall be as specified on figure 3.

3.2.3 Register organization, terminal and pin definitions. Register organization and terminal and pin definitions shall be as specified in 6.5 (and figure 11) and 6.6 respectively.

3.2.4 Microprocessor instructions. Microprocessor instructions shall be as specified in table VI.

3.2.5 Case outlines. The case outlines shall be as specified in 1.2.3 and figure 1.

3.3 Lead material and finish. Lead material and finish shall be in accordance with MIL-M-38510 (see 6.7).

3.4 Electrical performance characteristics. Unless otherwise specified, the electrical performance characteristics are as specified in table I and figures 5, 6, 7, and 8 and apply over the full recommended operating temperature range.

3.5 Electrical test requirements. The electrical test requirements shall be as specified in table II. The electrical tests for each subgroup are described in tables III, IV, and V and figures 5, 6, 7, and 8.

3.6 Marking. Marking shall be in accordance with MIL-M-38510. At the option of the manufacturer, the country of origin may be omitted from the body of the microcircuit, but shall be retained on the initial container.

3.7 Microcircuit group assignment. The devices covered by this specification shall be in microcircuit group number 107 (see MIL-M-38510, appendix E).

3.8 Schematic circuits. Submission of schematic circuits to the qualifying activity is not required.

TABLE I. Electrical performance characteristics.

| Test | Symbol | Conditions $T_C$ = -55°C to +110°C $V_{CC}$ = 5.0 V ±5% unless otherwise specified | Device type | Reference number 1/ | Limits Min | Limits Max | Unit |
|---|---|---|---|---|---|---|---|
| Low level output voltage A23-1, FC0-2, $\overline{BG}$, E | $V_{OL}$ | $I_{OL}$ = 3.2 mA $V_{CC}$ = 4.75 V | All | | | 0.5 | V |
| Low level output voltage $\overline{HALT}$ | $V_{OL}$ | $V_{CC}$ = 4.75 V $I_{OL}$ = 1.6 mA | All | | | 0.5 | V |
| Low level output voltage $\overline{AS}$,R/$\overline{W}$, D15-0, $\overline{UDS}$, $\overline{LDS}$, $\overline{VMA}$, | $V_{OL}$ | $I_{OL}$ = 5.3 mA $V_{CC}$ = 4.75 V | All | | | 0.5 | V |
| Low level output voltage $\overline{RESET}$ | $V_{OL}$ | $V_{CC}$ = 4.75 V $I_{OL}$ = 5.0 mA | All | | | 0.5 | V |
| High level output voltage | $V_{OH}$ | $I_{OH}$ = -400 μA | All | | 2.4 | | V |
| High level input current (all inputs) | $I_{IH}$ | $V_{IN}$ = 2.4 V | All | | | 2.5 | μA |
| Low level input current (all inputs) | $I_{IL}$ | $V_{IN}$ = 0.0 V | All | | -2.5 | | μA |
| High level input current $\overline{HALT}$/$\overline{RESET}$ | $I_{IH}$ | $V_{IN}$ = 2.4 V | All | | | 20 | μA |
| Low level input current $\overline{HALT}$/$\overline{RESET}$ | $I_{IL}$ | $V_{IN}$ = 0.4 V | All | | -20 | | μA |
| Three-state output high leakage (all outputs) | $I_{OHZ}$ | $V_{OUT}$ = 2.4 V | All | | | 20 | μA |
| Three-state output low leakage (all outputs) | $I_{OLZ}$ | $V_{OUT}$ = 0.4 V | All | | -20 | | μA |
| Supply current | $I_{CC}$ | $V_{CC}$ = 5.25 V | All | | | 320 | mA |
| Input capacitance (all inputs) | $C_I$ | $T_C$ = 25°C, $V_{CC}$ = GND f = 1 MHz | All | | | 20 | pF |

See footnotes at end of table.

TABLE I. Electrical performance characteristics - Continued.

| Test | Symbol | Conditions $T_C$ = -55°C to +110°C $V_{CC}$ = 5.0 V ±5% unless otherwise specified | Device type | Reference number 1/ | Limits Min | Limits Max | Unit |
|---|---|---|---|---|---|---|---|
| DIN to CLK low ($t_{SET}$) | $t_{DICL}$ | $V_{IH}$ = 2.4 V<br>$V_{IL}$ = 0.8 V<br>Freq = 4.0 MHz min<br>$C_L$ = 130 pF ±10%<br>3/ | 01<br>02<br>03 | 47 | 25<br>15<br>15 | | ns |
| DIN to CLK low ($t_{HOLD}$) 2/ | $t_{HDICL}$ | | 01<br>02<br>03 | 47 | 25<br>20<br>20 | | ns |
| $\overline{DTACK}$ to CLK low ($t_{SET}$) | $t_{SDTCL}$ | | 01<br>02<br>03 | 47 | 25<br>20<br>20 | | ns |
| $\overline{BR}$ to CLK low ($t_{SET}$) | $t_{SBRCL}$ | | 01<br>02<br>03 | 47 | 25<br>20<br>20 | | ns |
| $\overline{VPA}$ to CLK low ($t_{SET}$) | $t_{SVPACL}$ | | 01<br>02<br>03 | 47 | 25<br>20<br>20 | | ns |
| $\overline{BERR}$ to CLK low ($t_{SET}$) | $t_{SPERCL}$ | | 01<br>02<br>03 | 47 | 25<br>20<br>20 | | ns |
| Clock period | $t_{CYC}$ | | 01<br>02<br>03 | 1 | 167<br>125<br>100 | 250<br>250<br>250 | ns |
| CLK width low | $t_{CL}$ | | 01<br>02<br>03 | 2 | 75<br>55<br>45 | 125<br>125<br>125 | ns |
| CLK width high | $t_{CH}$ | | 01<br>02<br>03 | 3 | 75<br>55<br>45 | 125<br>125<br>125 | ns |
| CLK high to FC valid | $t_{CHFCV}$ | | 01<br>02<br>03 | 6A | | 80<br>70<br>60 | ns |
| CLK high to $\overline{AS}$, $\overline{DS}$ low, max | $t_{CHSLX}$ | | 01<br>02<br>03 | 9 | | 60<br>60<br>55 | ns |
| CLK high to $\overline{AS}$, $\overline{DS}$ low, min 4/ | $t_{CHSLN}$ | | All | 10 | 0 | | ns |
| CLK low to $\overline{AS}$ high | $t_{CLSH}$ | | 01<br>02<br>03 | 12 | | 80<br>70<br>55 | ns |

See footnotes at end of table.

TABLE I. Electrical performance characteristics - Continued.

| Test | Symbol | Conditions $T_C$ = -55°C to +110°C $V_{CC}$ = 5.0 V ±5% unless otherwise specified | Device type | Reference number 1/ | Limits Min | Limits Max | Unit |
|---|---|---|---|---|---|---|---|
| CLK low to $\overline{DS}$ high | $t_{CLSH}$ | $V_{IH}$ = 2.4 V<br>$V_{IL}$ = 0.8 V<br>Freq = 4.0 MHz min<br>$C_L$ = 130 pF ±10%<br>3/ | 01<br>02<br>03 | 12 | | 80<br>70<br>55 | ns |
| CLK high to R/$\overline{W}$ high, max | $t_{CHRHX}$ | | 01<br>02<br>03 | 18 | | 80<br>70<br>60 | ns |
| CLK high to R/$\overline{W}$ high, min 4/ | $t_{CHRHN}$ | | All | 19 | 0 | | ns |
| CLK high to R/$\overline{W}$ low | $t_{CHRL}$ | | 01<br>02<br>03 | 20 | | 80<br>70<br>60 | ns |
| CLK low to $D_{OUT}$ valid | $t_{CLDO}$ | | 01<br>02<br>03 | 23 | | 80<br>70<br>55 | ns |
| CLK low to address valid | $t_{CLAV}$ | | 01<br>02<br>03 | 6 | | 80<br>70<br>60 | ns |
| CLK high to $\overline{BG}$ low | $t_{CHGL}$ | | 01<br>02<br>03 | 33 | | 80<br>70<br>60 | ns |
| CLK high to $\overline{BG}$ high | $t_{CHGH}$ | | 01<br>02<br>03 | 34 | | 80<br>70<br>60 | ns |
| CLK low to $\overline{VMA}$ low | $t_{CLVML}$ | | 01<br>02<br>03 | 40 | | 80<br>70<br>70 | ns |
| CLK low to E transition | $t_{CLE}$ | | 01<br>02<br>03 | 41 | | 85<br>70<br>55 | ns |
| CLK high to address data three-state, max 4/ | $t_{CHAZX}$ | | 01<br>02<br>03 | 7 | | 100<br>80<br>70 | ns |
| CLK high to address/FC invalid, min 4/ | $t_{CHAZN}$ | | All | 8 | 0 | | ns |
| CLK high to $\overline{AS}$, $\overline{DS}$, three-state 4/ | $t_{CHSZ}$ | | 01<br>02<br>03 | 16 | | 100<br>80<br>70 | ns |

See footnotes at end of table.

TABLE I. Electrical performance characteristics - Continued.

| Test | Symbol | Conditions $T_C$ = -55°C to +110°C $V_{CC}$ = 5.0 V ±5% unless otherwise specified | Device type | Reference number 1/ | Limits Min | Limits Max | Unit |
|---|---|---|---|---|---|---|---|
| CLK high to R/$\overline{W}$ $\overline{VMA}$ three-state 4/ 5/ | $t_{CHRZ}$ | $V_{IH}$ = 2.4 V<br>$V_{IL}$ = 0.8 V<br>Freq = 4.0 MHz min<br>$C_L$ = 130 pF ±10% 3/ | 01<br>02<br>03 | 24 | | 100<br>80<br>70 | ns |
| Address to $\overline{AS}$, $\overline{DS}$ (read) low/$\overline{AS}$ write 4/ | $t_{AVSL}$ | | 01<br>02<br>03 | 11 | 35<br>30<br>20 | | ns |
| FC valid to $\overline{AS}$, $\overline{DS}$ (read) low/$\overline{AS}$ write 4/ | $t_{FCVSL}$ | | 01<br>02<br>03 | 11A | 70<br>60<br>50 | | ns |
| $\overline{AS}$, $\overline{DS}$, high to address/ FC invalid 4/ | $t_{SHAZ}$ | | 01<br>02<br>03 | 13 | 40<br>30<br>20 | | ns |
| $\overline{AS}$, $\overline{DS}$, width low (read) $\overline{AS}$ write 4/ | $t_{SL}$ | | 01<br>02<br>03 | 14 | 337<br>240<br>195 | | ns |
| $\overline{DS}$ width low (write) 4/ | $t_{DSL}$ | | 01<br>02<br>03 | 14A | 170<br>115<br>95 | | ns |
| $\overline{AS}$, $\overline{DS}$ width high 4/ | $t_{SH}$ | | 01<br>02<br>03 | 15 | 180<br>150<br>105 | | ns |
| $\overline{AS}$ high to R/$\overline{W}$ high 4/ | $t_{SHRH}$ | | 01<br>02<br>03 | 17 | 50<br>40<br>20 | | ns |
| Address valid to R/$\overline{W}$ low 4/ | $t_{AVRL}$ | | 01<br>02<br>03 | 21 | 25<br>20<br>0 | | ns |
| R/$\overline{W}$ low to $\overline{DS}$ low (write) 4/ | $t_{RLSL}$ | | 01<br>02<br>03 | 22 | 140<br>80<br>50 | | ns |
| $\overline{DS}$ high to $D_{OUT}$ invalid 4/ | $t_{SHDO}$ | | 01<br>02<br>03 | 25 | 40<br>30<br>20 | | ns |
| $\overline{AS}$, $\overline{DS}$ high to $\overline{DTACK}$ high 4/ | $t_{SHDAH}$ | | 01<br>02<br>03 | 28 | 0<br>0<br>0 | 325<br>245<br>190 | ns |
| $\overline{DS}$ to data invalid (holdtime) 4/ | $t_{SHDI}$ | | All | 29 | 0 | | ns |

See footnotes at end of table.

TABLE I. Electrical performance characteristics - Continued.

| Test | Symbol | Conditions $T_C$ = -55°C to +110°C $V_{CC}$ = 5.0 V ±5% unless otherwise specified | Device type | Reference number 1/ | Limits Min | Limits Max | Unit |
|---|---|---|---|---|---|---|---|
| $\overline{AS}$, $\overline{DS}$ high to $\overline{BERR}$ high 4/ | $t_{SHBEH}$ | $V_{IH}$ = 2.4 V<br>$V_{IL}$ = 0.8 V<br>Freq = 4.0 MHz min<br>$C_L$ = 130 pF ±10%<br>3/ | All | 30 | 0 | | ns |
| $\overline{DTACK}$ low to data in (setup time) 4/ | $t_{DALDI}$ | | 01<br>02<br>03 | 31 | | 120<br>90<br>65 | ns |
| $\overline{HALT}$ and $\overline{RESET}$ input transition time 4/ | $t_{RHRF}$ | | All | 32 | 0 | 200 | ns |
| $\overline{BR}$ low to $\overline{BG}$ low 4/ | $t_{BRLGL}$ | | 01 | 35 | 1.5 | 3.5 +100 ns | CLKS |
| | | | 02 | | 1.5 | +90 ns | |
| | | | 03 | | 1.5 | 3.5 +70 ns | |
| $\overline{BR}$ high to $\overline{BG}$ high 1/ 4/ | $t_{BRHGH}$ | | 01 | 36 | 1.5 | 3.0 +100 ns | CLKS |
| | | | 02 | | 1.5 | +90 ns | |
| | | | 03 | | 1.5 | 3.5 +90 ns | |
| $\overline{BGACK}$ low to $\overline{BG}$ high 4/ | $t_{GALGH}$ | | 01 | 37 | 1.5 | 3.0 +100 ns | CLKS |
| | | | 02 | | 1.5 | +90 ns | |
| | | | 03 | | 1.5 | 3.5 +80 ns | |
| $\overline{BG}$ low to bus three-state W/$\overline{AS}$ high 4/ | $t_{GLZ}$ | | 01<br>02<br>03 | 38 | | 100<br>80<br>70 | ns |
| $\overline{BG}$ width high 4/ | $t_{GH}$ | | All | 39 | 1.5 | | CLKS |
| E output rise and fall time 4/ | $t_{ERF}$ | | All | 42 | | 25 | ns |
| $\overline{VMA}$ low to E high 4/ | $t_{VMLEH}$ | | 01<br>02<br>03 | 43 | 240<br>200<br>150 | | ns |
| $\overline{AS}$, $\overline{DS}$ high to $\overline{VPA}$ high 4/ | $t_{SHVPH}$ | | 01<br>02<br>03 | 44 | 0<br>0<br>0 | 160<br>120<br>90 | ns |

See footnotes at end of table.

TABLE I. Electrical performance characteristics - Continued.

| Test | Symbol | Conditions $T_C$ = -55°C to +110°C $V_{CC}$ = 5.0 V ±5% unless otherwise specified | Device type | Reference number 1/ | Limits Min | Limits Max | Unit |
|---|---|---|---|---|---|---|---|
| E low to address $\overline{VWA}$/FC invalid 4/ | $t_{ELAI}$ | $V_{IH}$ = 2.4 V<br>$V_{IL}$ = 0.8 V<br>Freq = 4.0 MHz min<br>$C_L$ = 130 pF ±10%<br>3/ | 01<br>02<br>03 | 45 | 35<br>30<br>10 | | ns |
| $\overline{BGACK}$ width 4/ | $t_{BGL}$ | | All | 46 | 1.5 | | CLKS |
| $\overline{BERR}$ low to $\overline{DTACK}$ low 4/ | $t_{BELDAL}$ | | 01<br>02<br>03 | 48 | 25<br>20<br>20 | | ns |
| E low to $\overline{AS}$, $\overline{DS}$ invalid 4/ | $t_{ELSI}$ | | 01<br>02<br>03 | 49 | -80<br>-70<br>-55 | +80<br>+70<br>+55 | ns |
| E width high 4/ | $t_{EH}$ | | 01<br>02<br>03 | 50 | 600<br>450<br>350 | | ns |
| E width low 4/ | $t_{EL}$ | | 01<br>02<br>03 | 51 | 900<br>700<br>550 | | ns |
| E extended rise time 4/ | $t_{CIEHX}$ | | All | 52 | 80 | | ns |
| Data hold from clock high 4/ | $t_{CHDO}$ | | All | 53 | 0 | | ns |
| Data hold from E low (write) 4/ | $t_{ELDOZ}$ | | 01<br>02<br>03 | 54 | 35<br>30<br>20 | | ns |
| R/$\overline{W}$ to data bus impedance change 4/ | $t_{RLDO}$ | | 01<br>02<br>03 | 55 | 35<br>30<br>20 | | ns |
| HALT/$\overline{RESET}$ pulse width 4/ 6/ | $t_{HRPW}$ | | All | 56 | 10 | | clk. per. |

1/ The reference number refers to the position where the parameter being tested appears on figures 5, 6, 7 and 8.
2/ Not tested, user information only.
3/ Figures 5, 6, 7 and 8 represent the electrical performance characteristics associated with the ac limits shown in table I.
4/ Tested initially and at process or design changes.
5/ Combined with $t_{CHSZ}$ (16), control bus specification.
6/ After $V_{CC}$ has been applied for 100 ms.

TABLE II. Electrical test requirements.

| MIL-STD-883 test requirements | Subgroups (see table III) | |
|---|---|---|
| | Class S devices | Class B devices |
| Interim electrical parameters (method 5004) | 2,8(+110°C),10 | 2,8(+110°C),10 |
| Final electrical test parameters (method 5004) | *1,*2,3, 8(+110°C),10,11 | *1,*2,3 8(+110°C),10,11 |
| Group A test requirements (method 5005) | 2,**4,8(+110°C), 10,11 | 2,**4,8(+110°C), 10,11 |
| Group C end-point electrical parameters (method 5005) | 2,4,8(+110°C),10 | 2,8(+110°C),10 |
| Group D end-point electrical parameters (method 5005) | 2,4,8(+110°C),10 | 2,8(+110°C),10 |
| Additional electrical tests for group C inspection | None | None |

* PDA may apply to subgroup 1 or subgroup 2 with approval of qualifying activity (see 4.2c).

** Subgroup 4 shall be performed once upon qualification or device redesign which effects input capacitance. Select 5 samples at random and measure inputs of $\overline{D3}$, $\overline{BERR}$, $\overline{DTACK}$, $\overline{IPLD}$, and $\overline{BR}$ of each sample.

## 4. QUALITY ASSURANCE PROVISIONS

4.1 Sampling and inspection. Sampling and inspection procedures shall be in accordance with MIL-M-38510 and methods 5005 and 5007 of MIL-STD-883, as applicable, except as modified herein.

4.2 Screening. Screening shall be in accordance with method 5004 of MIL-STD-883, and shall be conducted on all devices prior to qualification and quality conformance inspection. The following additional criteria shall apply.

a. Burn-in test, method 1015 of MIL-STD-883.

(1) $T_A$ = +125°C minimum.

(2) Test condition D or E using the burn-in circuit and timing waveforms as specified on figure 4.

b. Constant acceleration in accordance with test condition D of method 2001 of MIL-STD-883.

c. Percent defective allowable (PDA) - The PDA shall be in accordance with MIL-M-38510.

4.3 Qualification inspection. Qualification inspection shall be in accordance with MIL-M-38510. Inspections to be performed shall be those specified herein for groups A, B, C, and D inspections (see 4.4.1 through 4.4.4).

4.3.1 Qualification extention. When authorized by the qualifying activity, for qualification inspection, if a manufacturer qualifies a device type, then the slower device types of the same type (see MIL-M-38510, 3.1.3.21) may be part I qualified, upon request of the manufacturer, without additional testing.

4.4 Quality conformance inspection. Quality conformance inspection shall be in accordance with MIL-M-38510. Inspections to be performed shall be those specified in method 5005 of MIL-STD-883 and herein for groups A, B, C, and D inspections (see 4.4.1 through 4.4.4).

4.4.1 Group A inspection. Group A inspection shall consist of the test subgroups and acceptance values as follows:

a. Tests shall be as specified in table II.

b. Subgroups 3, 5, 6, 7, and 9 of table I of method 5005 of MIL-STD-883 shall be omitted.

c.

| Subgroups | Minimum sample (accept number) |
|---|---|
| 4 | (See table II) |
| 1, 2 | 32(0) |
| 10, 11 | 22(0) |

Subgroup 8 is encompassed in subgroups 10 and 11.

4.4.2 Group B inspection. Group B inspection shall consist of the test subgroups and acceptance values shown in table II of method 5005 of MIL-STD-883.

a. A special subgroup shall be added using a minimum sample size of 15 with zero failures for class B. This subgroup shall consist of a high-voltage test of the input protection circuits, $V_{ZAP}$ (see 4.5.2). This subgroup shall be done for initial design qualification and process or design changes which may affect input protection circuit sensitivity.

b. Subgroup 3 (solderability) shall be omitted for devices in package Z. At the option of the manufacturer, the following alternate test method for subgroup 3 (solderability) shall be bath temperature = +245°C ±5°C dwell times 5 seconds ±.5 seconds, R or RMA flux and steam aged for 1 hour for devices in Z package only.

4.4.3 Groups C and D inspections. Groups C and D inspections shall consist of the test subgroups and acceptance values shown in tables III and IV of method 5005 of MIL-STD-883 and as follows:

a. End-point electrical parameters shall be as specified in table II.

b. Steady-state life test (method 1005 of MIL-STD-883).

(1) Use life test condition D using the circuit and timing as shown on figure 4.

(2) $T_A$ = +125°C.

4.4.4 Constant acceleration. The constant acceleration tests of groups C and D shall be performed using test condition D.

4.4.5 Inspection of packaging. Inspection of packaging shall be in accordance with MIL-M-38510.

TABLE III. Group A inspection for device types 01, 02, and 03.
Terminal conditions (pins not designated are open)

| Subgroup | Symbol | MIL-STD-883 method | Test no. | 1 D4 | 2 D3 | 3 D2 | 4 D1 | 5 D0 | 6 $\overline{AS}$ | 7 $\overline{UDS}$ | 8 $\overline{LDS}$ | 9 R/$\overline{W}$ | 10 $\overline{DTACK}$ | 11 $\overline{BG}$ | 12 $\overline{BGACK}$ | 13 $\overline{BR}$ | 14 $V_{CC}$ | 15 CLK | 16 GND | 17 $\overline{HALT}$ |
|---|---|---|---|---|---|---|---|---|---|---|---|---|---|---|---|---|---|---|---|---|
| 1 | Same tests, terminal conditions, and limits as for subgroup 2, except $T_C$ = +25°C. | | | | | | | | | | | | | | | | | | | |
| 2 $T_C$ = +110°C | $I_{CC}$ 1/ | 3005 | 1 | 0.8 V | 0.8 V | 0.8 V | 0.8 V | 0.8 V | | | | | 2.4 V | | 2.4 V | 2.4 V | 5.25 V | 0.8 V 1/ | GND | 2.4 V |
| | $V_{OL}$ 1/ | 3007 | 2 | 5.3 mA | | | | | | | | | " | | " | " | 4.75 V | " | " | " |
| | | | 3 | | 5.3 mA | | | | | | | | " | | " | " | " | " | " | " |
| | | | 4 | | | 5.3 mA | | | | | | | " | | " | " | " | " | " | " |
| | | | 5 | | | | 5.3 mA | | | | | | " | | " | " | " | " | " | " |
| | | | 6 | | | | | 5.3 mA | | | | | " | | " | " | " | " | " | " |
| | | | 7 | | | | | | | | | | " | | " | " | " | " | " | " |
| | | | 8 | | | | | | | | | | " | | " | " | " | " | " | " |
| | | | 9 | | | | | | | | | | " | | " | " | " | " | " | " |
| | | | 10 | | | | | | | | | | " | | " | " | " | " | " | " |
| | | | 11 | | | | | | | | | | " | | " | " | " | " | " | " |
| | | | 12 | | | | | | | | | | " | | " | " | " | " | " | " |
| | | | 13 | | | | | | | | | | " | | " | " | " | " | " | " |
| | | | 14 | | | | | | | | | | " | | " | " | " | " | " | " |
| | | | 15 | | | | | | | | | | " | | " | " | " | " | " | " |
| | | | 16 | | | | | | | | | | " | | " | " | " | " | " | " |
| | | | 17 | | | | | | | | | | " | | " | " | " | " | " | " |
| | | | 18 | | | | | | | | | | " | | " | " | " | " | " | " |
| | | | 19 | | | | | | | | | | " | | " | " | " | " | " | " |
| | | | 20 | | | | | | | | | | " | | " | " | " | " | " | " |
| | | | 21 | | | | | | | | | | " | | " | " | " | " | " | " |
| | | | 22 | | | | | | | | | | " | | " | " | " | " | " | " |
| | | | 23 | | | | | | | | | | " | | " | " | " | " | " | " |
| | | | 24 | | | | | | | | | | " | | " | " | " | " | " | " |
| | | | 25 | | | | | | | | | | " | | " | " | " | " | " | " |
| | | | 26 | | | | | | | | | | " | | " | " | " | " | " | " |
| | | | 27 | | | | | | | | | | " | | " | " | " | " | " | " |
| | | | 28 | | | | | | | | | | " | | " | " | " | " | " | " |
| | | | 29 | | | | | | | | | | " | | " | " | " | " | " | " |
| | | | 30 | | | | | | | | | | " | | " | " | " | " | " | " |
| | | | 31 | | | | | | | | | | " | | " | " | " | " | " | " |
| | | | 32 | | | | | | | | | | " | | " | " | " | " | " | " |
| | | | 33 | | | | | | | | | | " | | " | " | " | " | " | " |
| | | | 34 | | | | | | | | | | " | | " | " | " | " | " | " |
| | | | 35 | | | | | | | | | | " | | " | " | " | " | " | " |
| | | | 36 | | | | | | | | | | " | | " | " | " | " | " | " |
| | | | 37 | | | | | | | | | | " | | " | " | " | " | " | " |
| | | | 38 | | | | | | | | | | " | | " | " | " | " | " | " |
| | | | 39 | | | | | | | | | | " | | " | " | " | " | " | " |
| | | | 40 | | | | | | | | | | " | | " | " | " | " | " | " |
| | | | 41 | | | | | | | | | | " | | " | " | " | " | " | " |
| | | | 42 | | | | | | | | | | " | | " | " | " | " | " | " |
| | | | 43 | | | | | | | | | | " | | " | " | " | " | " | " |
| | | | 44 | | | | | | 5.3 mA | | | | " | | " | " | " | " | " | " |
| | | | 45 | | | | | | | 5.3 mA | | | " | | " | " | " | " | " | " |
| | | | 46 | | | | | | | | 5.3 mA | | " | | " | " | " | " | " | " |
| | | | 47 | | | | | | | | | 5.3 mA | " | | " | " | " | " | " | " |
| | | | 48 | | | | | | | | | | " | 3.2 mA | " | " | " | " | " | " |
| | | | 49 | | | | | | | | | | " | | " | " | " | " | " | " |
| | | | 50 | | | | | | | | | | " | | " | " | " | " | " | " |
| | | | 51 | | | | | | | | | | " | | " | " | " | " | " | 1.6 mA |
| | | | 52 | | | | | | | | | | " | | " | " | " | " | " | 2.4 V |
| | $V_{OH}$ 1/ | 3006 | 53 | -400 μA | | | | | | | | | " | | " | " | " | " | " | " |
| | | | 54 | | -400 μA | | | | | | | | " | | " | " | " | " | " | " |
| | | | 55 | | | -400 μA | | | | | | | " | | " | " | " | " | " | " |
| | | | 56 | | | | -400 μA | | | | | | " | | " | " | " | " | " | " |
| | | | 57 | | | | | -400 μA | | | | | " | | " | " | " | " | " | " |
| | | | 58 | | | | | | | | | | " | | " | " | " | " | " | " |
| | | | 59 | | | | | | | | | | " | | " | " | " | " | " | " |

See footnotes at end of table.

TABLE III. Group A inspection for device types 01, 02, and 03 - Continued.
Terminal conditions (pins not designated are open)

| Subgroup | Symbol | MIL-STD-883 method | Test no. | 18 | 19 | 20 | 21 | 22 | 23 | 24 | 25 | 26 | 27 | 28 | 29 | 30 | 31 | 32 | 33 | 34 |
|---|---|---|---|---|---|---|---|---|---|---|---|---|---|---|---|---|---|---|---|---|
| | | | | $\overline{RST}$ | $\overline{VMA}$ | E | $\overline{VPA}$ | $\overline{BERR}$ | IPL2 | IPL1 | IPL0 | FC2 | FC1 | FC0 | A1 | A2 | A3 | A4 | A5 | A6 |
| 1 | | | | | | | | | | | | | | | | | | | | |
| 2 $T_C$ = +110°C | $I_{CC}$ 1/ | 3005 | 1 | 2.4 V | | | 2.4 V | 2.4 V | 2.4 V | 2.4 V | 2.4 V | | | | | | | | | |
| | $V_{OL}$ 1/ | 3007 | 2 | " | | | " | " | " | " | " | | | | | | | | | |
| | | | 3 | " | | | " | " | " | " | " | | | | | | | | | |
| | | | 4 | " | | | " | " | " | " | " | | | | | | | | | |
| | | | 5 | " | | | " | " | " | " | " | | | | | | | | | |
| | | | 6 | " | | | " | " | " | " | " | | | | | | | | | |
| | | | 7 | " | | | " | " | " | " | " | | | | | | | | | |
| | | | 8 | " | | | " | " | " | " | " | | | | | | | | | |
| | | | 9 | " | | | " | " | " | " | " | | | | | | | | | |
| | | | 10 | " | | | " | " | " | " | " | | | | | | | | | |
| | | | 11 | " | | | " | " | " | " | " | | | | | | | | | |
| | | | 12 | " | | | " | " | " | " | " | | | | | | | | | |
| | | | 13 | " | | | " | " | " | " | " | | | | | | | | | |
| | | | 14 | " | | | " | " | " | " | " | | | | | | | | | |
| | | | 15 | " | | | " | " | " | " | " | | | | | | | | | |
| | | | 16 | " | | | " | " | " | " | " | | | | | | | | | |
| | | | 17 | " | | | " | " | " | " | " | | | | | | | | | |
| | | | 18 | " | | | " | " | " | " | " | | | | 3.2 mA | | | | | |
| | | | 19 | " | | | " | " | " | " | " | | | | | 3.2 mA | | | | |
| | | | 20 | " | | | " | " | " | " | " | | | | | | 3.2 mA | | | |
| | | | 21 | " | | | " | " | " | " | " | | | | | | | 3.2 mA | | |
| | | | 22 | " | | | " | " | " | " | " | | | | | | | | 3.2 mA | |
| | | | 23 | " | | | " | " | " | " | " | | | | | | | | | 3.2 mA |
| | | | 24 | " | | | " | " | " | " | " | | | | | | | | | |
| | | | 25 | " | | | " | " | " | " | " | | | | | | | | | |
| | | | 26 | " | | | " | " | " | " | " | | | | | | | | | |
| | | | 27 | " | | | " | " | " | " | " | | | | | | | | | |
| | | | 28 | " | | | " | " | " | " | " | | | | | | | | | |
| | | | 29 | " | | | " | " | " | " | " | | | | | | | | | |
| | | | 30 | " | | | " | " | " | " | " | | | | | | | | | |
| | | | 31 | " | | | " | " | " | " | " | | | | | | | | | |
| | | | 32 | " | | | " | " | " | " | " | | | | | | | | | |
| | | | 33 | " | | | " | " | " | " | " | | | | | | | | | |
| | | | 34 | " | | | " | " | " | " | " | | | | | | | | | |
| | | | 35 | " | | | " | " | " | " | " | | | | | | | | | |
| | | | 36 | " | | | " | " | " | " | " | | | | | | | | | |
| | | | 37 | " | | | " | " | " | " | " | | | | | | | | | |
| | | | 38 | " | | | " | " | " | " | " | | | | | | | | | |
| | | | 39 | " | | | " | " | " | " | " | | | | | | | | | |
| | | | 40 | " | | | " | " | " | " | " | | | | | | | | | |
| | | | 41 | " | | | " | " | " | " | " | 3.2 mA | | | | | | | | |
| | | | 42 | " | | | " | " | " | " | " | | 3.2 mA | | | | | | | |
| | | | 43 | " | | | " | " | " | " | " | | | 3.2 mA | | | | | | |
| | | | 44 | " | | | " | " | " | " | " | | | | | | | | | |
| | | | 45 | " | | | " | " | " | " | " | | | | | | | | | |
| | | | 46 | " | | | " | " | " | " | " | | | | | | | | | |
| | | | 47 | " | | | " | " | " | " | " | | | | | | | | | |
| | | | 48 | " | | | " | " | " | " | " | | | | | | | | | |
| | | | 49 | " | 5.3 mA | | " | " | " | " | " | | | | | | | | | |
| | | | 50 | " | | 3.2 mA | " | " | " | " | " | | | | | | | | | |
| | | | 51 | " | | | " | " | " | " | " | | | | | | | | | |
| | | | 52 | 5.0 mA | | | " | " | " | " | " | | | | | | | | | |
| | $V_{OH}$ 1/ | 3006 | 53 | 2.4 V | | | " | " | " | " | " | | | | | | | | | |
| | | | 54 | " | | | " | " | " | " | " | | | | | | | | | |
| | | | 55 | " | | | " | " | " | " | " | | | | | | | | | |
| | | | 56 | " | | | " | " | " | " | " | | | | | | | | | |
| | | | 57 | " | | | " | " | " | " | " | | | | | | | | | |
| | | | 58 | " | | | " | " | " | " | " | | | | | | | | | |
| | | | 59 | " | | | " | " | " | " | " | | | | | | | | | |

See footnotes at end of table.

TABLE III. Group A inspection for device types 01, 02, and 03 - Continued.
Terminal conditions (pins not designated are open)

| Subgroup | Symbol | MIL-STD-883 method | Test no. | 35 A7 | 36 A8 | 37 A9 | 38 A10 | 39 A11 | 40 A12 | 41 A13 | 42 A14 | 43 A15 | 44 A16 | 45 A17 | 46 A18 | 47 A19 | 48 A20 | 49 $V_{CC}$ | 50 A21 | 51 A22 |
|---|---|---|---|---|---|---|---|---|---|---|---|---|---|---|---|---|---|---|---|---|
| 1 | | | | | | | | | | | | | | | | | | 5.25 V | | |
| 2 $T_C$ = +110°C | $I_{CC}$ 1/ | 3005 | 1 | | | | | | | | | | | | | | | 5.25 V | | |
| | $V_{OL}$ 1/ | 3007 | 2 | | | | | | | | | | | | | | | 4.75 V | | |
| | | | 3 | | | | | | | | | | | | | | | " | | |
| | | | 4 | | | | | | | | | | | | | | | " | | |
| | | | 5 | | | | | | | | | | | | | | | " | | |
| | | | 6 | | | | | | | | | | | | | | | " | | |
| | | | 7 | | | | | | | | | | | | | | | " | | |
| | | | 8 | | | | | | | | | | | | | | | " | | |
| | | | 9 | | | | | | | | | | | | | | | " | | |
| | | | 10 | | | | | | | | | | | | | | | " | | |
| | | | 11 | | | | | | | | | | | | | | | " | | |
| | | | 12 | | | | | | | | | | | | | | | " | | |
| | | | 13 | | | | | | | | | | | | | | | " | | |
| | | | 14 | | | | | | | | | | | | | | | " | | |
| | | | 15 | | | | | | | | | | | | | | | " | | |
| | | | 16 | | | | | | | | | | | | | | | " | | |
| | | | 17 | | | | | | | | | | | | | | | " | | |
| | | | 18 | | | | | | | | | | | | | | | " | | |
| | | | 19 | | | | | | | | | | | | | | | " | | |
| | | | 20 | | | | | | | | | | | | | | | " | | |
| | | | 21 | | | | | | | | | | | | | | | " | | |
| | | | 22 | | | | | | | | | | | | | | | " | | |
| | | | 23 | | | | | | | | | | | | | | | " | | |
| | | | 24 | 3.2 mA | | | | | | | | | | | | | | " | | |
| | | | 25 | | 3.2 mA | | | | | | | | | | | | | " | | |
| | | | 26 | | | 3.2 mA | | | | | | | | | | | | " | | |
| | | | 27 | | | | 3.2 mA | | | | | | | | | | | " | | |
| | | | 28 | | | | | 3.2 mA | | | | | | | | | | " | | |
| | | | 29 | | | | | | 3.2 mA | | | | | | | | | " | | |
| | | | 30 | | | | | | | 3.2 mA | | | | | | | | " | | |
| | | | 31 | | | | | | | | 3.2 mA | | | | | | | " | | |
| | | | 32 | | | | | | | | | 3.2 mA | | | | | | " | | |
| | | | 33 | | | | | | | | | | 3.2 mA | | | | | " | | |
| | | | 34 | | | | | | | | | | | 3.2 mA | | | | " | | |
| | | | 35 | | | | | | | | | | | | 3.2 mA | | | " | | |
| | | | 36 | | | | | | | | | | | | | 3.2 mA | | " | | |
| | | | 37 | | | | | | | | | | | | | | 3.2 mA | " | | |
| | | | 38 | | | | | | | | | | | | | | | " | 3.2 mA | |
| | | | 39 | | | | | | | | | | | | | | | " | | 3.2 mA |
| | | | 40 | | | | | | | | | | | | | | | " | | |
| | | | 41 | | | | | | | | | | | | | | | " | | |
| | | | 42 | | | | | | | | | | | | | | | " | | |
| | | | 43 | | | | | | | | | | | | | | | " | | |
| | | | 44 | | | | | | | | | | | | | | | " | | |
| | | | 45 | | | | | | | | | | | | | | | " | | |
| | | | 46 | | | | | | | | | | | | | | | " | | |
| | | | 47 | | | | | | | | | | | | | | | " | | |
| | | | 48 | | | | | | | | | | | | | | | " | | |
| | | | 49 | | | | | | | | | | | | | | | " | | |
| | | | 50 | | | | | | | | | | | | | | | " | | |
| | | | 51 | | | | | | | | | | | | | | | " | | |
| | | | 52 | | | | | | | | | | | | | | | " | | |
| | $V_{OH}$ 1/ | 3006 | 53 | | | | | | | | | | | | | | | " | | |
| | | | 54 | | | | | | | | | | | | | | | " | | |
| | | | 55 | | | | | | | | | | | | | | | " | | |
| | | | 56 | | | | | | | | | | | | | | | " | | |
| | | | 57 | | | | | | | | | | | | | | | " | | |
| | | | 58 | | | | | | | | | | | | | | | " | | |
| | | | 59 | | | | | | | | | | | | | | | " | | |

See footnotes at end of table.

TABLE III. Group A inspection for device types 01, 02, and 03 - Continued.
Terminal conditions (pins not designated are open)

| Subgroup | Symbol | MIL-STD-883 method | Test no. | 52 | 53 | 54 | 55 | 56 | 57 | 58 | 59 | 60 | 61 | 62 | 63 | 64 | Measured terminal | Test limit Min | Test limit Max | Unit |
|---|---|---|---|---|---|---|---|---|---|---|---|---|---|---|---|---|---|---|---|---|
| | | | | A23 | GND | D15 | D14 | D13 | D12 | D11 | D10 | D9 | D8 | D7 | D6 | D5 | | | | |
| 1 | | | | | | | | | | | | | | | | | | See table IIIA | | |
| 2 $T_C$ = +110°C | $I_{CC}$ 1/ | 3005 | 1 | | GND | 0.8 V | 0.8 V | 0.8 V | 0.8 V | 0.8 V | 0.8 V | 0.8 V | 0.8 V | 0.8 V | 0.8 V | 0.8 V | $V_{CC}$ | | 275 | mA |
| | $V_{OL}$ 1/ | 3007 | 2 | | " | | | | | | | | | | | | D4 | | 0.5 | V |
| | | | 3 | | " | | | | | | | | | | | | D3 | | " | " |
| | | | 4 | | " | | | | | | | | | | | | D2 | | " | " |
| | | | 5 | | " | | | | | | | | | | | | D1 | | " | " |
| | | | 6 | | " | | | | | | | | | | | | D0 | | " | " |
| | | | 7 | | " | 5.3 mA | | | | | | | | | | | D15 | | " | " |
| | | | 8 | | " | | 5.3 mA | | | | | | | | | | D14 | | " | " |
| | | | 9 | | " | | | 5.3 mA | | | | | | | | | D13 | | " | " |
| | | | 10 | | " | | | | 5.3 mA | | | | | | | | D12 | | " | " |
| | | | 11 | | " | | | | | 5.3 mA | | | | | | | D11 | | " | " |
| | | | 12 | | " | | | | | | 5.3 mA | | | | | | D10 | | " | " |
| | | | 13 | | " | | | | | | | 5.3 mA | | | | | D9 | | " | " |
| | | | 14 | | " | | | | | | | | 5.3 mA | | | | D8 | | " | " |
| | | | 15 | | " | | | | | | | | | 5.3 mA | | | D7 | | " | " |
| | | | 16 | | " | | | | | | | | | | 5.3 mA | | D6 | | " | " |
| | | | 17 | | " | | | | | | | | | | | 5.3 mA | D5 | | " | " |
| | | | 18 | | " | | | | | | | | | | | | A1 | | " | " |
| | | | 19 | | " | | | | | | | | | | | | A2 | | " | " |
| | | | 20 | | " | | | | | | | | | | | | A3 | | " | " |
| | | | 21 | | " | | | | | | | | | | | | A4 | | " | " |
| | | | 22 | | " | | | | | | | | | | | | A5 | | " | " |
| | | | 23 | | " | | | | | | | | | | | | A6 | | " | " |
| | | | 24 | | " | | | | | | | | | | | | A7 | | " | " |
| | | | 25 | | " | | | | | | | | | | | | A8 | | " | " |
| | | | 26 | | " | | | | | | | | | | | | A9 | | " | " |
| | | | 27 | | " | | | | | | | | | | | | A10 | | " | " |
| | | | 28 | | " | | | | | | | | | | | | A11 | | " | " |
| | | | 29 | | " | | | | | | | | | | | | A12 | | " | " |
| | | | 30 | | " | | | | | | | | | | | | A13 | | " | " |
| | | | 31 | | " | | | | | | | | | | | | A14 | | " | " |
| | | | 32 | | " | | | | | | | | | | | | A15 | | " | " |
| | | | 33 | | " | | | | | | | | | | | | A16 | | " | " |
| | | | 34 | | " | | | | | | | | | | | | A17 | | " | " |
| | | | 35 | | " | | | | | | | | | | | | A18 | | " | " |
| | | | 36 | | " | | | | | | | | | | | | A19 | | " | " |
| | | | 37 | | " | | | | | | | | | | | | A20 | | " | " |
| | | | 38 | | " | | | | | | | | | | | | A21 | | " | " |
| | | | 39 | | " | | | | | | | | | | | | A22 | | " | " |
| | | | 40 | 3.2 mA | " | | | | | | | | | | | | A23 | | " | " |
| | | | 41 | | " | | | | | | | | | | | | FC2 | | " | " |
| | | | 42 | | " | | | | | | | | | | | | FC1 | | " | " |
| | | | 43 | | " | | | | | | | | | | | | FC0 | | " | " |
| | | | 44 | | " | | | | | | | | | | | | $\overline{AS}$ | | " | " |
| | | | 45 | | " | | | | | | | | | | | | $\overline{UDS}$ | | " | " |
| | | | 46 | | " | | | | | | | | | | | | $\overline{LDS}$ | | " | " |
| | | | 47 | | " | | | | | | | | | | | | R/$\overline{W}$ | | " | " |
| | | | 48 | | " | | | | | | | | | | | | $\overline{BG}$ | | " | " |
| | | | 49 | | " | | | | | | | | | | | | $\overline{VMA}$ | | " | " |
| | | | 50 | | " | | | | | | | | | | | | E | | " | " |
| | | | 51 | | " | | | | | | | | | | | | $\overline{HALT}$ | | " | " |
| | | | 52 | | " | | | | | | | | | | | | $\overline{RESET}$ | | " | " |
| | $V_{OH}$ 1/ | 3006 | 53 | | " | | | | | | | | | | | | D4 | 2.4 | | " |
| | | | 54 | | " | | | | | | | | | | | | D3 | " | | " |
| | | | 55 | | " | | | | | | | | | | | | D2 | " | | " |
| | | | 56 | | " | | | | | | | | | | | | D1 | " | | " |
| | | | 57 | | " | | | | | | | | | | | | D0 | " | | " |
| | | | 58 | | " | -400 μA | | | | | | | | | | | D15 | " | | " |
| | | | 59 | | " | | -400 μA | | | | | | | | | | D14 | " | | " |

See footnotes at end of table.

TABLE III. Group A inspection for device types 01, 02, and 03 - Continued.
Terminal conditions (pins not designated are open)

| Subgroup | Symbol | MIL-STD-883 method | Test no. | 1 D4 | 2 D3 | 3 D2 | 4 D1 | 5 D0 | 6 $\overline{AS}$ | 7 $\overline{UDS}$ | 8 $\overline{LDS}$ | 9 R/$\overline{W}$ | 10 $\overline{DTACK}$ | 11 $\overline{BG}$ | 12 $\overline{BGACK}$ | 13 $\overline{BR}$ | 14 $V_{CC}$ | 15 CLK | 16 GND | 17 $\overline{HALT}$ |
|---|---|---|---|---|---|---|---|---|---|---|---|---|---|---|---|---|---|---|---|---|
| $T_C$ [2] = +110°C | $V_{OH}$ 1/ | 3006 | 60 | | | | | | | | | | 2.4 V | | 2.4 V | 2.4 V | 4.75 V | 2/ | GND | 0.8 V |
| | | | 61 | | | | | | | | | | " | | " | " | " | " | " | " |
| | | | 62 | | | | | | | | | | " | | " | " | " | " | " | " |
| | | | 63 | | | | | | | | | | " | | " | " | " | " | " | " |
| | | | 64 | | | | | | | | | | " | | " | " | " | " | " | " |
| | | | 65 | | | | | | | | | | " | | " | " | " | " | " | " |
| | | | 66 | | | | | | | | | | " | | " | " | " | " | " | " |
| | | | 67 | | | | | | | | | | " | | " | " | " | " | " | " |
| | | | 68 | | | | | | | | | | " | | " | " | " | " | " | " |
| | | | 69 | | | | | | | | | | " | | " | " | " | " | " | " |
| | | | 70 | | | | | | | | | | " | | " | " | " | " | " | " |
| | | | 71 | | | | | | | | | | " | | " | " | " | " | " | " |
| | | | 72 | | | | | | | | | | " | | " | " | " | " | " | " |
| | | | 73 | | | | | | | | | | " | | " | " | " | " | " | " |
| | | | 74 | | | | | | | | | | " | | " | " | " | " | " | " |
| | | | 75 | | | | | | | | | | " | | " | " | " | " | " | " |
| | | | 76 | | | | | | | | | | " | | " | " | " | " | " | " |
| | | | 77 | | | | | | | | | | " | | " | " | " | " | " | " |
| | | | 78 | | | | | | | | | | " | | " | " | " | " | " | " |
| | | | 79 | | | | | | | | | | " | | " | " | " | " | " | " |
| | | | 80 | | | | | | | | | | " | | " | " | " | " | " | " |
| | | | 81 | | | | | | | | | | " | | " | " | " | " | " | " |
| | | | 82 | | | | | | | | | | " | | " | " | " | " | " | " |
| | | | 83 | | | | | | | | | | " | | " | " | " | " | " | " |
| | | | 84 | | | | | | | | | | " | | " | " | " | " | " | " |
| | | | 85 | | | | | | | | | | " | | " | " | " | " | " | " |
| | | | 86 | | | | | | | | | | " | | " | " | " | " | " | " |
| | | | 87 | | | | | | | | | | " | | " | " | " | " | " | " |
| | | | 88 | | | | | | | | | | " | | " | " | " | " | " | " |
| | | | 89 | | | | | | | | | | " | | " | " | " | " | " | " |
| | | | 90 | | | | | | | | | | " | | " | " | " | " | " | " |
| | | | 91 | | | | | | | | | | " | | " | " | " | " | " | " |
| | | | 92 | | | | | | | | | | " | | " | " | " | " | " | " |
| | | | 93 | | | | | | | | | | " | | " | " | " | " | " | " |
| | | | 94 | | | | | | | | | | " | | " | " | " | " | " | " |
| | | | 95 | | | | | | -400 μA | | | | " | | " | " | " | " | " | " |
| | | | 96 | | | | | | | -400 μA | | | " | | " | " | " | " | " | " |
| | | | 97 | | | | | | | | -400 μA | | " | | " | " | " | " | " | " |
| | | | 98 | | | | | | | | | -400 μA | " | | " | " | " | " | " | " |
| | | | 99 | | | | | | | | | | " | -400 μA | " | " | " | " | " | " |
| | | | 100 | | | | | | | | | | " | | " | " | " | " | " | " |
| | | | 101 | | | | | | | | | | " | | " | " | " | " | " | " |
| | $I_{IH}$ | 3010 | 102 | | | | | | | | | | | | | | 5.25 V | | " | |
| | | | 103 | | | | | | | | | | | | 2.4 V | | " | | " | |
| | | | 104 | | | | | | | | | | | | | 2.4 V | " | | " | |
| | | | 105 | | | | | | | | | | 2.4 V | | | | " | | " | |
| | | | 106 | | | | | | | | | | | | | | " | | " | |
| | | | 107 | | | | | | | | | | | | | | " | | " | |
| | | | 108 | | | | | | | | | | | | | | " | | " | |
| | | | 109 | | | | | | | | | | | | | | " | | " | |
| | | | 110 | | | | | | | | | | | | | | " | | " | 2.4 V |
| | | | 111 | | | | | | | | | | | | | | " | | " | |
| | $I_{IL}$ | 3009 | 112 | | | | | | | | | | | | | | " | | " | |
| | | | 113 | | | | | | | | | | | | 0.4 V | | " | | " | |
| | | | 114 | | | | | | | | | | | | | 0.4 V | " | | " | |
| | | | 115 | | | | | | | | | | 0.4 V | | | | " | | " | |
| | | | 116 | | | | | | | | | | | | | | " | | " | |
| | | | 117 | | | | | | | | | | | | | | " | | " | |
| | | | 118 | | | | | | | | | | | | | | " | | " | |
| | | | 119 | | | | | | | | | | | | | | " | | " | |
| | | | 120 | | | | | | | | | | | | | | " | | " | 0.4 V |
| | | | 121 | | | | | | | | | | | | | | " | | " | |

See footnotes at end of table.

TABLE III. Group A inspection for device types 01, 02, and 03 - Continued.
Terminal conditions (pins not designated are open)

| Subgroup | Symbol | MIL-STD-883 method | Test no. | 18 | 19 | 20 | 21 | 22 | 23 | 24 | 25 | 26 | 27 | 28 | 29 | 30 | 31 | 32 | 33 | 34 |
|---|---|---|---|---|---|---|---|---|---|---|---|---|---|---|---|---|---|---|---|---|
| | | | | RST | VMA | E | VPA | BERR | IPL2 | IPL1 | IPL0 | FC2 | FC1 | FC0 | A1 | A2 | A3 | A4 | A5 | A6 |
| $T_C = +110°C$ [2] | $V_{OH}$ 1/ | 3006 | 60 | 0.8 V | | | 2.4 V | 2.4 V | 2.4 V | 2.4 V | 2.4 V | | | | | | | | | |
| | | | 61 | " | | | " | " | " | " | " | | | | | | | | | |
| | | | 62 | " | | | " | " | " | " | " | | | | | | | | | |
| | | | 63 | " | | | " | " | " | " | " | | | | | | | | | |
| | | | 64 | " | | | " | " | " | " | " | | | | | | | | | |
| | | | 65 | " | | | " | " | " | " | " | | | | | | | | | |
| | | | 66 | " | | | " | " | " | " | " | | | | | | | | | |
| | | | 67 | " | | | " | " | " | " | " | | | | | | | | | |
| | | | 68 | " | | | " | " | " | " | " | | | | | | | | | |
| | | | 69 | " | | | " | " | " | " | " | | | | | | | | | |
| | | | 70 | " | | | " | " | " | " | " | | | | -400 μA | | | | | |
| | | | 71 | " | | | " | " | " | " | " | | | | | -400 μA | | | | |
| | | | 72 | " | | | " | " | " | " | " | | | | | | -400 μA | | | |
| | | | 73 | " | | | " | " | " | " | " | | | | | | | -400 μA | | |
| | | | 74 | " | | | " | " | " | " | " | | | | | | | | -400 μA | |
| | | | 75 | " | | | " | " | " | " | " | | | | | | | | | -400 μA |
| | | | 76 | " | | | " | " | " | " | " | | | | | | | | | |
| | | | 77 | " | | | " | " | " | " | " | | | | | | | | | |
| | | | 78 | " | | | " | " | " | " | " | | | | | | | | | |
| | | | 79 | " | | | " | " | " | " | " | | | | | | | | | |
| | | | 80 | " | | | " | " | " | " | " | | | | | | | | | |
| | | | 81 | " | | | " | " | " | " | " | | | | | | | | | |
| | | | 82 | " | | | " | " | " | " | " | | | | | | | | | |
| | | | 83 | " | | | " | " | " | " | " | | | | | | | | | |
| | | | 84 | " | | | " | " | " | " | " | | | | | | | | | |
| | | | 85 | " | | | " | " | " | " | " | | | | | | | | | |
| | | | 86 | " | | | " | " | " | " | " | | | | | | | | | |
| | | | 87 | " | | | " | " | " | " | " | | | | | | | | | |
| | | | 88 | " | | | " | " | " | " | " | | | | | | | | | |
| | | | 89 | " | | | " | " | " | " | " | | | | | | | | | |
| | | | 90 | " | | | " | " | " | " | " | | | | | | | | | |
| | | | 91 | " | | | " | " | " | " | " | | | | | | | | | |
| | | | 92 | " | | | " | " | " | " | " | -400 μA | | | | | | | | |
| | | | 93 | " | | | " | " | " | " | " | | -400 μA | | | | | | | |
| | | | 94 | " | | | " | " | " | " | " | | | -400 μA | | | | | | |
| | | | 95 | " | | | " | " | " | " | " | | | | | | | | | |
| | | | 96 | " | | | " | " | " | " | " | | | | | | | | | |
| | | | 97 | " | | | " | " | " | " | " | | | | | | | | | |
| | | | 98 | " | | | " | " | " | " | " | | | | | | | | | |
| | | | 99 | " | | | " | " | " | " | " | | | | | | | | | |
| | | | 100 | " | -400 μA | | " | " | " | " | " | | | | | | | | | |
| | | | 101 | " | | -400 μA | " | " | " | " | " | | | | | | | | | |
| | $I_{IH}$ | 3010 | 102 | | | | | | | | | | | | | | | | | |
| | | | 103 | | | | | | | | | | | | | | | | | |
| | | | 104 | | | | | | | | | | | | | | | | | |
| | | | 105 | | | | | | | | | | | | | | | | | |
| | | | 106 | | | | | | 2.4 V | | | | | | | | | | | |
| | | | 107 | | | | | | | 2.4 V | | | | | | | | | | |
| | | | 108 | | | | | | | | 2.4 V | | | | | | | | | |
| | | | 109 | | | | 2.4 V | | | | | | | | | | | | | |
| | | | 110 | | | | | | | | | | | | | | | | | |
| | | | 111 | 2.4 V | | | | | | | | | | | | | | | | |
| | $I_{IL}$ | 3009 | 112 | | | | | 0.4 V | | | | | | | | | | | | |
| | | | 113 | | | | | | | | | | | | | | | | | |
| | | | 114 | | | | | | | | | | | | | | | | | |
| | | | 115 | | | | | | | | | | | | | | | | | |
| | | | 116 | | | | | | 0.4 V | | | | | | | | | | | |
| | | | 117 | | | | | | | 0.4 V | | | | | | | | | | |
| | | | 118 | | | | | | | | 0.4 V | | | | | | | | | |
| | | | 119 | | | 0.4 V | | | | | | | | | | | | | | |
| | | | 120 | | | | | | | | | | | | | | | | | |
| | | | 121 | 0.4 V | | | | | | | | | | | | | | | | |

See footnotes at end of table.

TABLE III. Group A inspection for device types 01, 02, and 03 - Continued.
Terminal conditions (pins not designated are open)

| Subgroups | Symbol | MIL-STD-883 method | Test no. | 35 A7 | 36 A8 | 37 A9 | 38 A10 | 39 A11 | 40 A12 | 41 A13 | 42 A14 | 43 A15 | 44 A16 | 45 A17 | 46 A18 | 47 A19 | 48 A20 | 49 $V_{CC}$ | 50 A21 | 51 A22 |
|---|---|---|---|---|---|---|---|---|---|---|---|---|---|---|---|---|---|---|---|---|
| 2 $T_C$ = +110°C | $V_{OH}$ 1/ | 3006 | 60 | | | | | | | | | | | | | | | 4.75 V | | |
| | | | 61 | | | | | | | | | | | | | | | " | | |
| | | | 62 | | | | | | | | | | | | | | | " | | |
| | | | 63 | | | | | | | | | | | | | | | " | | |
| | | | 64 | | | | | | | | | | | | | | | " | | |
| | | | 65 | | | | | | | | | | | | | | | " | | |
| | | | 66 | | | | | | | | | | | | | | | " | | |
| | | | 67 | | | | | | | | | | | | | | | " | | |
| | | | 68 | | | | | | | | | | | | | | | " | | |
| | | | 69 | | | | | | | | | | | | | | | " | | |
| | | | 70 | | | | | | | | | | | | | | | " | | |
| | | | 71 | | | | | | | | | | | | | | | " | | |
| | | | 72 | | | | | | | | | | | | | | | " | | |
| | | | 73 | | | | | | | | | | | | | | | " | | |
| | | | 74 | | | | | | | | | | | | | | | " | | |
| | | | 75 | -400 μA | | | | | | | | | | | | | | " | | |
| | | | 76 | | -400 μA | | | | | | | | | | | | | " | | |
| | | | 77 | | | -400 μA | | | | | | | | | | | | " | | |
| | | | 78 | | | | -400 μA | | | | | | | | | | | " | | |
| | | | 79 | | | | | -400 μA | | | | | | | | | | " | | |
| | | | 80 | | | | | | -400 μA | | | | | | | | | " | | |
| | | | 81 | | | | | | | -400 μA | | | | | | | | " | | |
| | | | 82 | | | | | | | | -400 μA | | | | | | | " | | |
| | | | 83 | | | | | | | | | -400 μA | | | | | | " | | |
| | | | 84 | | | | | | | | | | -400 μA | | | | | " | | |
| | | | 85 | | | | | | | | | | | -400 μA | | | | " | | |
| | | | 86 | | | | | | | | | | | | -400 μA | | | " | | |
| | | | 87 | | | | | | | | | | | | | -400 μA | | " | | |
| | | | 88 | | | | | | | | | | | | | | -400 μA | " | | |
| | | | 89 | | | | | | | | | | | | | | | " | -400 μA | |
| | | | 90 | | | | | | | | | | | | | | | " | | -400 μA |
| | | | 91 | | | | | | | | | | | | | | | " | | |
| | | | 92 | | | | | | | | | | | | | | | " | | |
| | | | 93 | | | | | | | | | | | | | | | " | | |
| | | | 94 | | | | | | | | | | | | | | | " | | |
| | | | 95 | | | | | | | | | | | | | | | " | | |
| | | | 96 | | | | | | | | | | | | | | | " | | |
| | | | 97 | | | | | | | | | | | | | | | " | | |
| | | | 98 | | | | | | | | | | | | | | | " | | |
| | | | 99 | | | | | | | | | | | | | | | " | | |
| | | | 100 | | | | | | | | | | | | | | | " | | |
| | | | 101 | | | | | | | | | | | | | | | " | | |
| | $I_{IH}$ | 3010 | 102 | | | | | | | | | | | | | | | 5.25 V | | |
| | | | 103 | | | | | | | | | | | | | | | " | | |
| | | | 104 | | | | | | | | | | | | | | | " | | |
| | | | 105 | | | | | | | | | | | | | | | " | | |
| | | | 106 | | | | | | | | | | | | | | | " | | |
| | | | 107 | | | | | | | | | | | | | | | " | | |
| | | | 108 | | | | | | | | | | | | | | | " | | |
| | | | 109 | | | | | | | | | | | | | | | " | | |
| | | | 110 | | | | | | | | | | | | | | | " | | |
| | | | 111 | | | | | | | | | | | | | | | " | | |
| | $I_{IL}$ | 3009 | 112 | | | | | | | | | | | | | | | " | | |
| | | | 113 | | | | | | | | | | | | | | | " | | |
| | | | 114 | | | | | | | | | | | | | | | " | | |
| | | | 115 | | | | | | | | | | | | | | | " | | |
| | | | 116 | | | | | | | | | | | | | | | " | | |
| | | | 117 | | | | | | | | | | | | | | | " | | |
| | | | 118 | | | | | | | | | | | | | | | " | | |
| | | | 119 | | | | | | | | | | | | | | | " | | |
| | | | 120 | | | | | | | | | | | | | | | " | | |
| | | | 121 | | | | | | | | | | | | | | | " | | |

See footnotes at end of table.

TABLE III. Group A inspection for device types 01, 02, and 03 - Continued.
Terminal conditions (pins not designated are open)

| Subgroup | Symbol | MIL-STD-883 method | Test no. | 52 | 53 | 54 | 55 | 56 | 57 | 58 | 59 | 60 | 61 | 62 | 63 | 64 | Measured terminal | Test limit Min | Test limit Max | Unit |
|---|---|---|---|---|---|---|---|---|---|---|---|---|---|---|---|---|---|---|---|---|
| | | | | A23 | GND | D15 | D14 | D13 | D12 | D11 | D10 | D9 | D8 | D7 | D6 | D5 | | | | |
| 2 $T_C$ = +110°C | $V_{OH}$ 1/ | 3006 | 60 | | GND | | | -400 μA | | | | | | | | | D13 | 2.4 | | V |
| | | | 61 | | " | | | | -400 μA | | | | | | | | D12 | " | | " |
| | | | 62 | | " | | | | | -400 μA | | | | | | | D11 | " | | " |
| | | | 63 | | " | | | | | | -400 μA | | | | | | D10 | " | | " |
| | | | 64 | | " | | | | | | | -400 μA | | | | | D9 | " | | " |
| | | | 65 | | " | | | | | | | | -400 μA | | | | D8 | " | | " |
| | | | 66 | | " | | | | | | | | | -400 μA | | | D7 | " | | " |
| | | | 67 | | " | | | | | | | | | | -400 μA | | D6 | " | | " |
| | | | 68 | | " | | | | | | | | | | | -400 μA | D5 | " | | " |
| | | | 69 | | " | | | | | | | | | | | | A1 | " | | " |
| | | | 70 | | " | | | | | | | | | | | | A2 | " | | " |
| | | | 71 | | " | | | | | | | | | | | | A3 | " | | " |
| | | | 72 | | " | | | | | | | | | | | | A4 | " | | " |
| | | | 73 | | " | | | | | | | | | | | | A5 | " | | " |
| | | | 74 | | " | | | | | | | | | | | | A6 | " | | " |
| | | | 75 | | " | | | | | | | | | | | | A7 | " | | " |
| | | | 76 | | " | | | | | | | | | | | | A8 | " | | " |
| | | | 77 | | " | | | | | | | | | | | | A9 | " | | " |
| | | | 78 | | " | | | | | | | | | | | | A10 | " | | " |
| | | | 79 | | " | | | | | | | | | | | | A11 | " | | " |
| | | | 80 | | " | | | | | | | | | | | | A12 | " | | " |
| | | | 81 | | " | | | | | | | | | | | | A13 | " | | " |
| | | | 82 | | " | | | | | | | | | | | | A14 | " | | " |
| | | | 83 | | " | | | | | | | | | | | | A15 | " | | " |
| | | | 84 | | " | | | | | | | | | | | | A16 | " | | " |
| | | | 85 | | " | | | | | | | | | | | | A17 | " | | " |
| | | | 86 | | " | | | | | | | | | | | | A18 | " | | " |
| | | | 87 | | " | | | | | | | | | | | | A19 | " | | " |
| | | | 88 | | " | | | | | | | | | | | | A20 | " | | " |
| | | | 89 | | " | | | | | | | | | | | | A21 | " | | " |
| | | | 90 | | " | | | | | | | | | | | | A22 | " | | " |
| | | | 91 | -400 μA | " | | | | | | | | | | | | A23 | " | | " |
| | | | 92 | | " | | | | | | | | | | | | FC2 | " | | " |
| | | | 93 | | " | | | | | | | | | | | | FC1 | " | | " |
| | | | 94 | | " | | | | | | | | | | | | FC0 | " | | " |
| | | | 95 | | " | | | | | | | | | | | | $\overline{AS}$ | " | | " |
| | | | 96 | | " | | | | | | | | | | | | $\overline{UDS}$ | " | | " |
| | | | 97 | | " | | | | | | | | | | | | $\overline{LDS}$ | " | | " |
| | | | 98 | | " | | | | | | | | | | | | R/$\overline{W}$ | " | | " |
| | | | 99 | | " | | | | | | | | | | | | $\overline{BG}$ | " | | " |
| | | | 100 | | " | | | | | | | | | | | | $\overline{VMA}$ | " | | " |
| | | | 101 | | " | | | | | | | | | | | | E | " | | " |
| | $I_{IH}$ | 3010 | 102 | | " | | | | | | | | | | | | $\overline{BERR}$ | | 2.5 | μA |
| | | | 103 | | " | | | | | | | | | | | | $\overline{BGACK}$ | | " | " |
| | | | 104 | | " | | | | | | | | | | | | $\overline{BR}$ | | " | " |
| | | | 105 | | " | | | | | | | | | | | | $\overline{DTACK}$ | | " | " |
| | | | 106 | | " | | | | | | | | | | | | IPL2 | | " | " |
| | | | 107 | | " | | | | | | | | | | | | IPL1 | | " | " |
| | | | 108 | | " | | | | | | | | | | | | IPL0 | | " | " |
| | | | 109 | | " | | | | | | | | | | | | $\overline{VPA}$ | | " | " |
| | | | 110 | | " | | | | | | | | | | | | $\overline{HALT}$ | | 20.0 | " |
| | | | 111 | | " | | | | | | | | | | | | $\overline{RESET}$ | | 20.0 | " |
| | $I_{IL}$ | 3009 | 112 | | " | | | | | | | | | | | | $\overline{BERR}$ | -2.5 | | " |
| | | | 113 | | " | | | | | | | | | | | | $\overline{BGACK}$ | " | | " |
| | | | 114 | | " | | | | | | | | | | | | $\overline{BR}$ | " | | " |
| | | | 115 | | " | | | | | | | | | | | | $\overline{DTACK}$ | " | | " |
| | | | 116 | | " | | | | | | | | | | | | IPL2 | " | | " |
| | | | 117 | | " | | | | | | | | | | | | IPL1 | " | | " |
| | | | 118 | | " | | | | | | | | | | | | IPL0 | " | | " |
| | | | 119 | | " | | | | | | | | | | | | $\overline{VPA}$ | " | | " |
| | | | 120 | | " | | | | | | | | | | | | $\overline{HALT}$ | -20.0 | | " |
| | | | 121 | | " | | | | | | | | | | | | $\overline{RESET}$ | -20.0 | | " |

See footnotes at end of table.

TABLE III. Group A inspection for device types 01, 02, and 03 - Continued.
Terminal conditions (pins not designated are open)

| Subgroup | Symbol | MIL-STD-883 method | Test no. | 1 D4 | 2 D3 | 3 D2 | 4 D1 | 5 D0 | 6 $\overline{AS}$ | 7 $\overline{UDS}$ | 8 $\overline{LDS}$ | 9 R/$\overline{W}$ | 10 $\overline{DTACK}$ | 11 $\overline{BG}$ | 12 $\overline{BGACK}$ | 13 $\overline{BR}$ | 14 $V_{CC}$ | 15 CLK | 16 GND | 17 $\overline{HALT}$ |
|---|---|---|---|---|---|---|---|---|---|---|---|---|---|---|---|---|---|---|---|---|
| 2 $T_C$ = +110°C | $I_{OHZ}$ 3/ | | 122 | 2.4 V | | | | | | | | | 2.4 V | | 2.4 V | 2.4 V | 5.25 V | 2/ | GND | 0.8 V |
| | | | 123 | | 2.4 V | | | | | | | | " | | " | " | " | " | " | " |
| | | | 124 | | | 2.4 V | | | | | | | " | | " | " | " | " | " | " |
| | | | 125 | | | | 2.4 V | | | | | | " | | " | " | " | " | " | " |
| | | | 126 | | | | | 2.4 V | | | | | " | | " | " | " | " | " | " |
| | | | 127 | | | | | | | | | | " | | " | " | " | " | " | " |
| | | | 128 | | | | | | | | | | " | | " | " | " | " | " | " |
| | | | 129 | | | | | | | | | | " | | " | " | " | " | " | " |
| | | | 130 | | | | | | | | | | " | | " | " | " | " | " | " |
| | | | 131 | | | | | | | | | | " | | " | " | " | " | " | " |
| | | | 132 | | | | | | | | | | " | | " | " | " | " | " | " |
| | | | 133 | | | | | | | | | | " | | " | " | " | " | " | " |
| | | | 134 | | | | | | | | | | " | | " | " | " | " | " | " |
| | | | 135 | | | | | | | | | | " | | " | " | " | " | " | " |
| | | | 136 | | | | | | | | | | " | | " | " | " | " | " | " |
| | | | 137 | | | | | | | | | | " | | " | " | " | " | " | " |
| | | | 138 | | | | | | | | | | " | | " | " | " | " | " | " |
| | | | 139 | | | | | | | | | | " | | " | " | " | " | " | " |
| | | | 140 | | | | | | | | | | " | | " | " | " | " | " | " |
| | | | 141 | | | | | | | | | | " | | " | " | " | " | " | " |
| | | | 142 | | | | | | | | | | " | | " | " | " | " | " | " |
| | | | 143 | | | | | | | | | | " | | " | " | " | " | " | " |
| | | | 144 | | | | | | | | | | " | | " | " | " | " | " | " |
| | | | 145 | | | | | | | | | | " | | " | " | " | " | " | " |
| | | | 146 | | | | | | | | | | " | | " | " | " | " | " | " |
| | | | 147 | | | | | | | | | | " | | " | " | " | " | " | " |
| | | | 148 | | | | | | | | | | " | | " | " | " | " | " | " |
| | | | 149 | | | | | | | | | | " | | " | " | " | " | " | " |
| | | | 150 | | | | | | | | | | " | | " | " | " | " | " | " |
| | | | 151 | | | | | | | | | | " | | " | " | " | " | " | " |
| | | | 152 | | | | | | | | | | " | | " | " | " | " | " | " |
| | | | 153 | | | | | | | | | | " | | " | " | " | " | " | " |
| | | | 154 | | | | | | | | | | " | | " | " | " | " | " | " |
| | | | 155 | | | | | | | | | | " | | " | " | " | " | " | " |
| | | | 156 | | | | | | | | | | " | | " | " | " | " | " | " |
| | | | 157 | | | | | | | | | | " | | " | " | " | " | " | " |
| | | | 158 | | | | | | | | | | " | | " | " | " | " | " | " |
| | | | 159 | | | | | | | | | | " | | " | " | " | " | " | " |
| | | | 160 | | | | | | | | | | " | | " | " | " | " | " | " |
| | | | 161 | | | | | | | | | | " | | " | " | " | " | " | " |
| | | | 162 | | | | | | | | | | " | | " | " | " | " | " | " |
| | | | 163 | | | | | | | | | | " | | " | " | " | " | " | " |
| | | | 164 | | | | | | 2.4 V | | | | " | | " | " | " | " | " | " |
| | | | 165 | | | | | | | 2.4 V | | | " | | " | " | " | " | " | " |
| | | | 166 | | | | | | | | 2.4 V | | " | | " | " | " | " | " | " |
| | | | 167 | | | | | | | | | 2.4 V | " | | " | " | " | " | " | " |
| | $I_{OLZ}$ 3/ | | 168 | 0.4 V | | | | | | | | | " | | " | " | " | " | " | " |
| | | | 169 | | 0.4 V | | | | | | | | " | | " | " | " | " | " | " |
| | | | 170 | | | 0.4 V | | | | | | | " | | " | " | " | " | " | " |
| | | | 171 | | | | 0.4 V | | | | | | " | | " | " | " | " | " | " |
| | | | 172 | | | | | 0.4 V | | | | | " | | " | " | " | " | " | " |
| | | | 173 | | | | | | | | | | " | | " | " | " | " | " | " |
| | | | 174 | | | | | | | | | | " | | " | " | " | " | " | " |
| | | | 175 | | | | | | | | | | " | | " | " | " | " | " | " |
| | | | 176 | | | | | | | | | | " | | " | " | " | " | " | " |
| | | | 177 | | | | | | | | | | " | | " | " | " | " | " | " |
| | | | 178 | | | | | | | | | | " | | " | " | " | " | " | " |
| | | | 179 | | | | | | | | | | " | | " | " | " | " | " | " |
| | | | 180 | | | | | | | | | | " | | " | " | " | " | " | " |
| | | | 181 | | | | | | | | | | " | | " | " | " | " | " | " |
| | | | 182 | | | | | | | | | | " | | " | " | " | " | " | " |
| | | | 183 | | | | | | | | | | " | | " | " | " | " | " | " |
| | | | 184 | | | | | | | | | | " | | " | " | " | " | " | " |
| | | | 185 | | | | | | | | | | " | | " | " | " | " | " | " |
| | | | 186 | | | | | | | | | | " | | " | " | " | " | " | " |
| | | | 187 | | | | | | | | | | " | | " | " | " | " | " | " |
| | | | 188 | | | | | | | | | | " | | " | " | " | " | " | " |
| | | | 189 | | | | | | | | | | " | | " | " | " | " | " | " |

See footnotes at end of table

TABLE III. Group A inspection for device types 01, 02, and 03 - Continued.
Terminal conditions (pins not designated are open)

| Subgroup | Symbol | MIL-STD-883 method | Test no. | 18 RST | 19 VMA | 20 E | 21 VPA | 22 BERR | 23 IPL2 | 24 IPL1 | 25 IPL0 | 26 FC2 | 27 FC1 | 28 FC0 | 29 A1 | 30 A2 | 31 A3 | 32 A4 | 33 A5 | 34 A6 |
|---|---|---|---|---|---|---|---|---|---|---|---|---|---|---|---|---|---|---|---|---|
| 2 $T_C$ = +110°C | $I_{OHZ}$ 3/ | | 122 | 0.8 V | | | 2.4 V | 2.4 V | 2.4 V | 2.4 V | 2.4 V | | | | | | | | | |
| | | | 123 | " | | | " | " | " | " | " | | | | | | | | | |
| | | | 124 | " | | | " | " | " | " | " | | | | | | | | | |
| | | | 125 | " | | | " | " | " | " | " | | | | | | | | | |
| | | | 126 | " | | | " | " | " | " | " | | | | | | | | | |
| | | | 127 | " | | | " | " | " | " | " | | | | | | | | | |
| | | | 128 | " | | | " | " | " | " | " | | | | | | | | | |
| | | | 129 | " | | | " | " | " | " | " | | | | | | | | | |
| | | | 130 | " | | | " | " | " | " | " | | | | | | | | | |
| | | | 131 | " | | | " | " | " | " | " | | | | | | | | | |
| | | | 132 | " | | | " | " | " | " | " | | | | | | | | | |
| | | | 133 | " | | | " | " | " | " | " | | | | | | | | | |
| | | | 134 | " | | | " | " | " | " | " | | | | | | | | | |
| | | | 135 | " | | | " | " | " | " | " | | | | | | | | | |
| | | | 136 | " | | | " | " | " | " | " | | | | | | | | | |
| | | | 137 | " | | | " | " | " | " | " | | | | | | | | | |
| | | | 138 | " | | | " | " | " | " | " | | | | 2.4 V | | | | | |
| | | | 139 | " | | | " | " | " | " | " | | | | | 2.4 V | | | | |
| | | | 140 | " | | | " | " | " | " | " | | | | | | 2.4 V | | | |
| | | | 141 | " | | | " | " | " | " | " | | | | | | | 2.4 V | | |
| | | | 142 | " | | | " | " | " | " | " | | | | | | | | 2.4 V | |
| | | | 143 | " | | | " | " | " | " | " | | | | | | | | | 2.4 V |
| | | | 144 | " | | | " | " | " | " | " | | | | | | | | | |
| | | | 145 | " | | | " | " | " | " | " | | | | | | | | | |
| | | | 146 | " | | | " | " | " | " | " | | | | | | | | | |
| | | | 147 | " | | | " | " | " | " | " | | | | | | | | | |
| | | | 148 | " | | | " | " | " | " | " | | | | | | | | | |
| | | | 149 | " | | | " | " | " | " | " | | | | | | | | | |
| | | | 150 | " | | | " | " | " | " | " | | | | | | | | | |
| | | | 151 | " | | | " | " | " | " | " | | | | | | | | | |
| | | | 152 | " | | | " | " | " | " | " | | | | | | | | | |
| | | | 153 | " | | | " | " | " | " | " | | | | | | | | | |
| | | | 154 | " | | | " | " | " | " | " | | | | | | | | | |
| | | | 155 | " | | | " | " | " | " | " | | | | | | | | | |
| | | | 156 | " | | | " | " | " | " | " | | | | | | | | | |
| | | | 157 | " | | | " | " | " | " | " | | | | | | | | | |
| | | | 158 | " | | | " | " | " | " | " | | | | | | | | | |
| | | | 159 | " | | | " | " | " | " | " | | | | | | | | | |
| | | | 160 | " | | | " | " | " | " | " | | | | | | | | | |
| | | | 161 | " | | | " | " | " | " | " | 2.4 V | | | | | | | | |
| | | | 162 | " | | | " | " | " | " | " | | 2.4 V | | | | | | | |
| | | | 163 | " | | | " | " | " | " | " | | | 2.4 V | | | | | | |
| | | | 164 | " | | | " | " | " | " | " | | | | | | | | | |
| | | | 165 | " | | | " | " | " | " | " | | | | | | | | | |
| | | | 166 | " | | | " | " | " | " | " | | | | | | | | | |
| | | | 167 | " | | | " | " | " | " | " | | | | | | | | | |
| | $I_{OLZ}$ 3/ | | 168 | " | | | " | " | " | " | " | | | | | | | | | |
| | | | 169 | " | | | " | " | " | " | " | | | | | | | | | |
| | | | 170 | " | | | " | " | " | " | " | | | | | | | | | |
| | | | 171 | " | | | " | " | " | " | " | | | | | | | | | |
| | | | 172 | " | | | " | " | " | " | " | | | | | | | | | |
| | | | 173 | " | | | " | " | " | " | " | | | | | | | | | |
| | | | 174 | " | | | " | " | " | " | " | | | | | | | | | |
| | | | 175 | " | | | " | " | " | " | " | | | | | | | | | |
| | | | 176 | " | | | " | " | " | " | " | | | | | | | | | |
| | | | 177 | " | | | " | " | " | " | " | | | | | | | | | |
| | | | 178 | " | | | " | " | " | " | " | | | | | | | | | |
| | | | 179 | " | | | " | " | " | " | " | | | | | | | | | |
| | | | 180 | " | | | " | " | " | " | " | | | | | | | | | |
| | | | 181 | " | | | " | " | " | " | " | | | | | | | | | |
| | | | 182 | " | | | " | " | " | " | " | | | | | | | | | |
| | | | 183 | " | | | " | " | " | " | " | | | | | | | | | |
| | | | 184 | " | | | " | " | " | " | " | | | | 0.4 V | | | | | |
| | | | 185 | " | | | " | " | " | " | " | | | | | 0.4 V | | | | |
| | | | 186 | " | | | " | " | " | " | " | | | | | | 0.4 V | | | |
| | | | 187 | " | | | " | " | " | " | " | | | | | | | 0.4 V | | |
| | | | 188 | " | | | " | " | " | " | " | | | | | | | | 0.4 V | |
| | | | 189 | " | | | " | " | " | " | " | | | | | | | | | 0.4 V |

See footnotes at end of table.

TABLE III. Group A inspection for device types 01, 02, and 03 - Continued.
Terminal conditions (pins not designated are open)

| Subgroup | Symbol | MIL-STD-883 method | Test no. | 35 | 36 | 37 | 38 | 39 | 40 | 41 | 42 | 43 | 44 | 45 | 46 | 47 | 48 | 49 | 50 | 51 |
|---|---|---|---|---|---|---|---|---|---|---|---|---|---|---|---|---|---|---|---|---|
| | | | | A7 | A8 | A9 | A10 | A11 | A12 | A13 | A14 | A15 | A16 | A17 | A18 | A19 | A20 | $V_{CC}$ | A21 | A22 |
| 2 $T_C$ = +110°C | $I_{OHZ}$ 3/ | | 122 | | | | | | | | | | | | | | | 5.25 V | | |
| | | | 123 | | | | | | | | | | | | | | | " | | |
| | | | 124 | | | | | | | | | | | | | | | " | | |
| | | | 125 | | | | | | | | | | | | | | | " | | |
| | | | 126 | | | | | | | | | | | | | | | " | | |
| | | | 127 | | | | | | | | | | | | | | | " | | |
| | | | 128 | | | | | | | | | | | | | | | " | | |
| | | | 129 | | | | | | | | | | | | | | | " | | |
| | | | 130 | | | | | | | | | | | | | | | " | | |
| | | | 131 | | | | | | | | | | | | | | | " | | |
| | | | 132 | | | | | | | | | | | | | | | " | | |
| | | | 133 | | | | | | | | | | | | | | | " | | |
| | | | 134 | | | | | | | | | | | | | | | " | | |
| | | | 135 | | | | | | | | | | | | | | | " | | |
| | | | 136 | | | | | | | | | | | | | | | " | | |
| | | | 137 | | | | | | | | | | | | | | | " | | |
| | | | 138 | | | | | | | | | | | | | | | " | | |
| | | | 139 | | | | | | | | | | | | | | | " | | |
| | | | 140 | | | | | | | | | | | | | | | " | | |
| | | | 141 | | | | | | | | | | | | | | | " | | |
| | | | 142 | | | | | | | | | | | | | | | " | | |
| | | | 143 | | | | | | | | | | | | | | | " | | |
| | | | 144 | 2.4 V | | | | | | | | | | | | | | " | | |
| | | | 145 | | 2.4 V | | | | | | | | | | | | | " | | |
| | | | 146 | | | 2.4 V | | | | | | | | | | | | " | | |
| | | | 147 | | | | 2.4 V | | | | | | | | | | | " | | |
| | | | 148 | | | | | 2.4 V | | | | | | | | | | " | | |
| | | | 149 | | | | | | 2.4 V | | | | | | | | | " | | |
| | | | 150 | | | | | | | 2.4 V | | | | | | | | " | | |
| | | | 151 | | | | | | | | 2.4 V | | | | | | | " | | |
| | | | 152 | | | | | | | | | 2.4 V | | | | | | " | | |
| | | | 153 | | | | | | | | | | 2.4 V | | | | | " | | |
| | | | 154 | | | | | | | | | | | 2.4 V | | | | " | | |
| | | | 155 | | | | | | | | | | | | 2.4 V | | | " | | |
| | | | 156 | | | | | | | | | | | | | 2.4 V | | " | | |
| | | | 157 | | | | | | | | | | | | | | 2.4 V | " | | |
| | | | 158 | | | | | | | | | | | | | | | " | 2.4 V | |
| | | | 159 | | | | | | | | | | | | | | | " | | 2.4 V |
| | | | 160 | | | | | | | | | | | | | | | " | | |
| | | | 161 | | | | | | | | | | | | | | | " | | |
| | | | 162 | | | | | | | | | | | | | | | " | | |
| | | | 163 | | | | | | | | | | | | | | | " | | |
| | | | 164 | | | | | | | | | | | | | | | " | | |
| | | | 165 | | | | | | | | | | | | | | | " | | |
| | | | 166 | | | | | | | | | | | | | | | " | | |
| | | | 167 | | | | | | | | | | | | | | | " | | |
| | $I_{OLZ}$ 3/ | | 168 | | | | | | | | | | | | | | | " | | |
| | | | 169 | | | | | | | | | | | | | | | " | | |
| | | | 170 | | | | | | | | | | | | | | | " | | |
| | | | 171 | | | | | | | | | | | | | | | " | | |
| | | | 172 | | | | | | | | | | | | | | | " | | |
| | | | 173 | | | | | | | | | | | | | | | " | | |
| | | | 174 | | | | | | | | | | | | | | | " | | |
| | | | 175 | | | | | | | | | | | | | | | " | | |
| | | | 176 | | | | | | | | | | | | | | | " | | |
| | | | 177 | | | | | | | | | | | | | | | " | | |
| | | | 178 | | | | | | | | | | | | | | | " | | |
| | | | 179 | | | | | | | | | | | | | | | " | | |
| | | | 180 | | | | | | | | | | | | | | | " | | |
| | | | 181 | | | | | | | | | | | | | | | " | | |
| | | | 182 | | | | | | | | | | | | | | | " | | |
| | | | 183 | | | | | | | | | | | | | | | " | | |
| | | | 184 | | | | | | | | | | | | | | | " | | |
| | | | 185 | | | | | | | | | | | | | | | " | | |
| | | | 186 | | | | | | | | | | | | | | | " | | |
| | | | 187 | | | | | | | | | | | | | | | " | | |
| | | | 188 | | | | | | | | | | | | | | | " | | |
| | | | 189 | | | | | | | | | | | | | | | " | | |

See footnotes at end of table.

TABLE III. Group A inspection for device types 01, 02, and 03 - Continued.
Terminal conditions (pins not designated are open)

| Subgroup | Symbol | MIL-STD-883 method | Test no. | 52 | 53 | 54 | 55 | 56 | 57 | 58 | 59 | 60 | 61 | 62 | 63 | 64 | Measured terminal | Test limit | | Unit |
|---|---|---|---|---|---|---|---|---|---|---|---|---|---|---|---|---|---|---|---|---|
| | | | | A23 | GND | D15 | D14 | D13 | D12 | D11 | D10 | D9 | D8 | D7 | D6 | D5 | | Min | Max | |
| 2 $T_C$ = +110°C | $I_{OHZ}$ 3/ | | 122 | | GND | | | | | | | | | | | | D4 | | 20.0 | µA |
| | | | 123 | | " | | | | | | | | | | | | D3 | | " | " |
| | | | 124 | | " | | | | | | | | | | | | D2 | | " | " |
| | | | 125 | | " | | | | | | | | | | | | D1 | | " | " |
| | | | 126 | | " | | | | | | | | | | | | D0 | | " | " |
| | | | 127 | | " | 2.4 V | | | | | | | | | | | D15 | | " | " |
| | | | 128 | | " | | 2.4 V | | | | | | | | | | D14 | | " | " |
| | | | 129 | | " | | | 2.4 V | | | | | | | | | D13 | | " | " |
| | | | 130 | | " | | | | 2.4 V | | | | | | | | D12 | | " | " |
| | | | 131 | | " | | | | | 2.4 V | | | | | | | D11 | | " | " |
| | | | 132 | | " | | | | | | 2.4 V | | | | | | D10 | | " | " |
| | | | 133 | | " | | | | | | | 2.4 V | | | | | D9 | | " | " |
| | | | 134 | | " | | | | | | | | 2.4 V | | | | D8 | | " | " |
| | | | 135 | | " | | | | | | | | | 2.4 V | | | D7 | | " | " |
| | | | 136 | | " | | | | | | | | | | 2.4 V | | D6 | | " | " |
| | | | 137 | | " | | | | | | | | | | | 2.4 V | D5 | | " | " |
| | | | 138 | | " | | | | | | | | | | | | A1 | | " | " |
| | | | 139 | | " | | | | | | | | | | | | A2 | | " | " |
| | | | 140 | | " | | | | | | | | | | | | A3 | | " | " |
| | | | 141 | | " | | | | | | | | | | | | A4 | | " | " |
| | | | 142 | | " | | | | | | | | | | | | A5 | | " | " |
| | | | 143 | | " | | | | | | | | | | | | A6 | | " | " |
| | | | 144 | | " | | | | | | | | | | | | A7 | | " | " |
| | | | 145 | | " | | | | | | | | | | | | A8 | | " | " |
| | | | 146 | | " | | | | | | | | | | | | A9 | | " | " |
| | | | 147 | | " | | | | | | | | | | | | A10 | | " | " |
| | | | 148 | | " | | | | | | | | | | | | A11 | | " | " |
| | | | 149 | | " | | | | | | | | | | | | A12 | | " | " |
| | | | 150 | | " | | | | | | | | | | | | A13 | | " | " |
| | | | 151 | | " | | | | | | | | | | | | A14 | | " | " |
| | | | 152 | | " | | | | | | | | | | | | A15 | | " | " |
| | | | 153 | | " | | | | | | | | | | | | A16 | | " | " |
| | | | 154 | | " | | | | | | | | | | | | A17 | | " | " |
| | | | 155 | | " | | | | | | | | | | | | A18 | | " | " |
| | | | 156 | | " | | | | | | | | | | | | A19 | | " | " |
| | | | 157 | | " | | | | | | | | | | | | A20 | | " | " |
| | | | 158 | | " | | | | | | | | | | | | A21 | | " | " |
| | | | 159 | | " | | | | | | | | | | | | A22 | | " | " |
| | | | 160 | | " | | | | | | | | | | | | A23 | | " | " |
| | | | 161 | 2.4 V | " | | | | | | | | | | | | FC2 | | " | " |
| | | | 162 | | " | | | | | | | | | | | | FC1 | | " | " |
| | | | 163 | | " | | | | | | | | | | | | FC0 | | " | " |
| | | | 164 | | " | | | | | | | | | | | | AS | | " | " |
| | | | 165 | | " | | | | | | | | | | | | UDS | | " | " |
| | | | 166 | | " | | | | | | | | | | | | LDS | | " | " |
| | | | 167 | | " | | | | | | | | | | | | R/$\overline{W}$ | | " | " |
| | $I_{OLZ}$ 3/ | | 168 | | " | | | | | | | | | | | | D4 | -20.0 | | " |
| | | | 169 | | " | | | | | | | | | | | | D3 | " | | " |
| | | | 170 | | " | | | | | | | | | | | | D2 | " | | " |
| | | | 171 | | " | | | | | | | | | | | | D1 | " | | " |
| | | | 172 | | " | | | | | | | | | | | | D0 | " | | " |
| | | | 173 | | " | 0.4 V | | | | | | | | | | | D15 | " | | " |
| | | | 174 | | " | | 0.4 V | | | | | | | | | | D14 | " | | " |
| | | | 175 | | " | | | 0.4 V | | | | | | | | | D13 | " | | " |
| | | | 176 | | " | | | | 0.4 V | | | | | | | | D12 | " | | " |
| | | | 177 | | " | | | | | 0.4 V | | | | | | | D11 | " | | " |
| | | | 178 | | " | | | | | | 0.4 V | | | | | | D10 | " | | " |
| | | | 179 | | " | | | | | | | 0.4 V | | | | | D9 | " | | " |
| | | | 180 | | " | | | | | | | | 0.4 V | | | | D8 | " | | " |
| | | | 181 | | " | | | | | | | | | 0.4 V | | | D7 | " | | " |
| | | | 182 | | " | | | | | | | | | | 0.4 V | | D6 | " | | " |
| | | | 183 | | " | | | | | | | | | | | 0.4 V | D5 | " | | " |
| | | | 184 | | " | | | | | | | | | | | | A1 | " | | " |
| | | | 185 | | " | | | | | | | | | | | | A2 | " | | " |
| | | | 186 | | " | | | | | | | | | | | | A3 | " | | " |
| | | | 187 | | " | | | | | | | | | | | | A4 | " | | " |
| | | | 188 | | " | | | | | | | | | | | | A5 | " | | " |
| | | | 189 | | " | | | | | | | | | | | | A6 | " | | " |

See footnotes at end of table.

TABLE III. Group A inspection for device types 01, 02, and 03 - Continued.
Terminal conditions (pins not designated are open)

| Subgroup | Symbol | MIL-STD-883 method | Test no. | 1 | 2 | 3 | 4 | 5 | 6 | 7 | 8 | 9 | 10 | 11 | 12 | 13 | 14 | 15 | 16 | 17 |
|---|---|---|---|---|---|---|---|---|---|---|---|---|---|---|---|---|---|---|---|---|
| | | | | D4 | D3 | D2 | D1 | D0 | $\overline{AS}$ | $\overline{UDS}$ | $\overline{LDS}$ | R/$\overline{W}$ | $\overline{DTACK}$ | $\overline{BG}$ | $\overline{BGACK}$ | $\overline{BR}$ | $V_{CC}$ | CLK | GND | $\overline{HALT}$ |
| 2 $T_C$ = +110°C | $I_{OLZ}$ 3/ | | 190 | | | | | | | | | | 2.4 V | | 2.4 V | 2.4 V | 5.25 V | 2.4 V | GND | 0.8 V |
| | | | 191 | | | | | | | | | | " | | " | " | " | " | " | " |
| | | | 192 | | | | | | | | | | " | | " | " | " | " | " | " |
| | | | 193 | | | | | | | | | | " | | " | " | " | " | " | " |
| | | | 194 | | | | | | | | | | " | | " | " | " | " | " | " |
| | | | 195 | | | | | | | | | | " | | " | " | " | " | " | " |
| | | | 196 | | | | | | | | | | " | | " | " | " | " | " | " |
| | | | 197 | | | | | | | | | | " | | " | " | " | " | " | " |
| | | | 198 | | | | | | | | | | " | | " | " | " | " | " | " |
| | | | 199 | | | | | | | | | | " | | " | " | " | " | " | " |
| | | | 200 | | | | | | | | | | " | | " | " | " | " | " | " |
| | | | 201 | | | | | | | | | | " | | " | " | " | " | " | " |
| | | | 202 | | | | | | | | | | " | | " | " | " | " | " | " |
| | | | 203 | | | | | | | | | | " | | " | " | " | " | " | " |
| | | | 204 | | | | | | | | | | " | | " | " | " | " | " | " |
| | | | 205 | | | | | | | | | | " | | " | " | " | " | " | " |
| | | | 206 | | | | | | | | | | " | | " | " | " | " | " | " |
| | | | 207 | | | | | | | | | | " | | " | " | " | " | " | " |
| | | | 208 | | | | | | | | | | " | | " | " | " | " | " | " |
| | | | 209 | | | | | | | | | | " | | " | " | " | " | " | " |
| | | | 210 | | | | | | 0.4 V | | | | " | | " | " | " | " | " | " |
| | | | 211 | | | | | | | 0.4 V | | | " | | " | " | " | " | " | " |
| | | | 212 | | | | | | | | 0.4 V | | " | | " | " | " | " | " | " |
| | | | 213 | | | | | | | | | 0.4 V | " | | " | " | " | " | " | " |
| 3 | Same tests, terminal conditions, and limits as for subgroup 2, except $T_C$ = -55°C, and $I_{CC}$ = 320 mA. | | | | | | | | | | | | | | | | | | | |
| 4 4/ $T_C$ = +25°C | $C_I$ | 3012 | | | | | | | | | | | | | | | | | | |
| 8 5/ 6/ | Func-tional | 3014 See figure 9 | | See 6.2 (table V) | | | | | | | | | | | | | | | | |
| 10 6/ 7/ $T_C$ = +110°C | Switch-ing | 3003 See figure 9 | | See 6.2 (table V) | | | | | | | | | | | | | | | | |
| 11 6/ 7/ $T_C$ = -55°C | Switch-ing | 3003 See figure 9 | | Same tests, terminal conditions, and limits as for subgroup 10 except $T_C$ = -55°C. | | | | | | | | | | | | | | | | |

See footnotes at end of table.

TABLE III. Group A inspection for device types 01, 02, and 03 - Continued.
Terminal conditions (pins not designated are open)

| Subgroup | Symbol | MIL-STD-883 method | Test no. | 18 | 19 | 20 | 21 | 22 | 23 | 24 | 25 | 26 | 27 | 28 | 29 | 30 | 31 | 32 | 33 | 34 |
|---|---|---|---|---|---|---|---|---|---|---|---|---|---|---|---|---|---|---|---|---|
| | | | | $\overline{RST}$ | $\overline{VMA}$ | E | $\overline{VPA}$ | $\overline{BERR}$ | IPL2 | IPL1 | IPL0 | FC2 | FC1 | FC0 | A1 | A2 | A3 | A4 | A5 | A6 |
| 2 $T_C$ = +110°C | $I_{OLZ}$ 3/ | | 190 | 0.8 V | | | 2.4 V | 2.4 V | 2.4 V | 2.4 V | 2.4 V | | | | | | | | | |
| | | | 191 | " | | | " | " | " | " | " | | | | | | | | | |
| | | | 192 | " | | | " | " | " | " | " | | | | | | | | | |
| | | | 193 | " | | | " | " | " | " | " | | | | | | | | | |
| | | | 194 | " | | | " | " | " | " | " | | | | | | | | | |
| | | | 195 | " | | | " | " | " | " | " | | | | | | | | | |
| | | | 196 | " | | | " | " | " | " | " | | | | | | | | | |
| | | | 197 | " | | | " | " | " | " | " | | | | | | | | | |
| | | | 198 | " | | | " | " | " | " | " | | | | | | | | | |
| | | | 199 | " | | | " | " | " | " | " | | | | | | | | | |
| | | | 200 | " | | | " | " | " | " | " | | | | | | | | | |
| | | | 201 | " | | | " | " | " | " | " | | | | | | | | | |
| | | | 202 | " | | | " | " | " | " | " | | | | | | | | | |
| | | | 203 | " | | | " | " | " | " | " | | | | | | | | | |
| | | | 204 | " | | | " | " | " | " | " | | | | | | | | | |
| | | | 205 | " | | | " | " | " | " | " | | | | | | | | | |
| | | | 206 | " | | | " | " | " | " | " | | | | | | | | | |
| | | | 207 | " | | | " | " | " | " | " | 0.4 V | | | | | | | | |
| | | | 208 | " | | | " | " | " | " | " | | 0.4 V | | | | | | | |
| | | | 209 | " | | | " | " | " | " | " | | | 0.4 V | | | | | | |
| | | | 210 | " | | | " | " | " | " | " | | | | | | | | | |
| | | | 211 | " | | | " | " | " | " | " | | | | | | | | | |
| | | | 212 | " | | | " | " | " | " | " | | | | | | | | | |
| | | | 213 | " | | | " | " | " | " | " | | | | | | | | | |
| 3 | | | | | | | | | | | | | | | | | | | | |
| 4 $T_C$ = +25°C 4/ | $C_I$ | 3012 | | | | | | | | | | | | | | | | | | |
| 8 5/6/ | Functional | 3014 See figure 9 | | | | | | | | | | | | | | | | | | |
| 10 6/7/ $T_C$ = +110°C | Switching | 3003 See figure 9 | | | | | | | | | | | | | | | | | | |
| 11 6/7/ $T_C$ = -55°C | Switching | 3003 See figure 9 | | | | | | | | | | | | | | | | | | |

See footnotes at end of table.

TABLE III. Group A inspection for device types 01, 02, and 03 - Continued.
Terminal conditions (pins not designated are open)

| Subgroup | Symbol | MIL-STD-883 method | Test no. | 35 | 36 | 37 | 38 | 39 | 40 | 41 | 42 | 43 | 44 | 45 | 46 | 47 | 48 | 49 | 50 | 51 |
|---|---|---|---|---|---|---|---|---|---|---|---|---|---|---|---|---|---|---|---|---|
| | | | | A7 | A8 | A9 | A10 | A11 | A12 | A13 | A14 | A15 | A16 | A17 | A18 | A19 | A20 | $V_{CC}$ | A21 | A22 |
| 2 $T_C$ = +110°C | $I_{OLZ}$ 3/ | | 190 | 0.4 V | | | | | | | | | | | | | | 5.25 V | | |
| | | | 191 | | 0.4 V | | | | | | | | | | | | | " | | |
| | | | 192 | | | 0.4 V | | | | | | | | | | | | " | | |
| | | | 193 | | | | 0.4 V | | | | | | | | | | | " | | |
| | | | 194 | | | | | 0.4 V | | | | | | | | | | " | | |
| | | | 195 | | | | | | 0.4 V | | | | | | | | | " | | |
| | | | 196 | | | | | | | 0.4 V | | | | | | | | " | | |
| | | | 197 | | | | | | | | 0.4 V | | | | | | | " | | |
| | | | 198 | | | | | | | | | 0.4 V | | | | | | " | | |
| | | | 199 | | | | | | | | | | 0.4 V | | | | | " | | |
| | | | 200 | | | | | | | | | | | 0.4 V | | | | " | | |
| | | | 201 | | | | | | | | | | | | 0.4 V | | | " | | |
| | | | 202 | | | | | | | | | | | | | 0.4 V | | " | | |
| | | | 203 | | | | | | | | | | | | | | 0.4 V | " | | |
| | | | 204 | | | | | | | | | | | | | | | " | 0.4 V | |
| | | | 205 | | | | | | | | | | | | | | | " | | 0.4 V |
| | | | 206 | | | | | | | | | | | | | | | " | | |
| | | | 207 | | | | | | | | | | | | | | | " | | |
| | | | 208 | | | | | | | | | | | | | | | " | | |
| | | | 209 | | | | | | | | | | | | | | | " | | |
| | | | 210 | | | | | | | | | | | | | | | " | | |
| | | | 211 | | | | | | | | | | | | | | | " | | |
| | | | 212 | | | | | | | | | | | | | | | " | | |
| | | | 213 | | | | | | | | | | | | | | | GND | | |
| 3 | | | | | | | | | | | | | | | | | | 5.25 V | | |
| 4 4/ $T_C$ = +25°C | $C_I$ | 3012 | | | | | | | | | | | | | | | | 4.75 V<br>5.25 V | | |
| 8 5/6/ | Func-tional | 3014 See figure 9 | | | | | | | | | | | | | | | | 4.75 V<br>5.25 V | | |
| 10 6/7/ $T_C$ = +110°C | Switch-ing | 3003 See figure 9 | | | | | | | | | | | | | | | | | | |
| 11 6/7/ $T_C$ = -55°C | Switch-ing | 3003 See figure 9 | | | | | | | | | | | | | | | | | | |

See footnotes at end of table.

TABLE III. Group A inspection for device types 01, 02, and 03 - Continued.
Terminal conditions (pins not designated are open)

| Subgroup | Symbol | MIL-STD-883 method | Test no. | 52 | 53 | 54 | 55 | 56 | 57 | 58 | 59 | 60 | 61 | 62 | 63 | 64 | Measured terminal | Test limit Min | Test limit Max | Unit |
|---|---|---|---|---|---|---|---|---|---|---|---|---|---|---|---|---|---|---|---|---|
| | | | | A23 | GND | D15 | D14 | D13 | D12 | D11 | D10 | D9 | D8 | D7 | D6 | D5 | | | | |
| 2 $T_C$ = +110°C | $I_{OLZ}$ 3/ | | 190 | | GND | | | | | | | | | | | | A7 | | -20.0 | µA |
| | | | 191 | | " | | | | | | | | | | | | A8 | | " | " |
| | | | 192 | | " | | | | | | | | | | | | A9 | | " | " |
| | | | 193 | | " | | | | | | | | | | | | A10 | | " | " |
| | | | 194 | | " | | | | | | | | | | | | A11 | | " | " |
| | | | 195 | | " | | | | | | | | | | | | A12 | | " | " |
| | | | 196 | | " | | | | | | | | | | | | A13 | | " | " |
| | | | 197 | | " | | | | | | | | | | | | A14 | | " | " |
| | | | 198 | | " | | | | | | | | | | | | A15 | | " | " |
| | | | 199 | | " | | | | | | | | | | | | A16 | | " | " |
| | | | 200 | | " | | | | | | | | | | | | A17 | | " | " |
| | | | 201 | | " | | | | | | | | | | | | A18 | | " | " |
| | | | 202 | | " | | | | | | | | | | | | A19 | | " | " |
| | | | 203 | | " | | | | | | | | | | | | A20 | | " | " |
| | | | 204 | | " | | | | | | | | | | | | A21 | | " | " |
| | | | 205 | | " | | | | | | | | | | | | A22 | | " | " |
| | | | 206 | 0.4 V | " | | | | | | | | | | | | A23 | | " | " |
| | | | 207 | | " | | | | | | | | | | | | FC2 | | " | " |
| | | | 208 | | " | | | | | | | | | | | | FC1 | | " | " |
| | | | 209 | | " | | | | | | | | | | | | FC0 | | " | " |
| | | | 210 | | " | | | | | | | | | | | | $\overline{AS}$ | | " | " |
| | | | 211 | | " | | | | | | | | | | | | $\overline{UDS}$ | | " | " |
| | | | 212 | | " | | | | | | | | | | | | $\overline{LDS}$ | | " | " |
| | | | 213 | | " | | | | | | | | | | | | R/$\overline{W}$ | | " | " |
| 3 | | | | | | | | | | | | | | | | | - | See table IIIA | | |
| 4 4/ $T_C$ = +25°C | $C_I$ | 3012 | | | | | | | | | | | | | | | $D_3$, $\overline{BERR}$, $\overline{DTACK}$, $\overline{IPLD}$, $\overline{BR}$ | | 20 | pF |
| 8 5/6/ | Functional | 3014 See figure 9 | | | | | | | | | | | | | | | - | See table IIIA | | |
| 10 6/7/ $T_C$ = +110°C | Switching | 3003 See figure 9 | | | | | | | | | | | | | | | - | See table IIIA | | |
| 11 6/7/ $T_C$ = -55°C | Switching | 3003 See figure 9 | | | | | | | | | | | | | | | - | See table IIIA | | |

See footnotes at end of table.

TABLE IIIA. Group A inspection for device types 01, 02, and 03.

| Test | Symbol | Figure number 8/ | Reference number 9/ | Subgroups 10 and 11 limits $T_C$ = -55°C and +110°C | | | | | | Unit |
|---|---|---|---|---|---|---|---|---|---|---|
| | | | | Device type 01 | | Device type 02 | | Device type 03 | | |
| | | | | Min | Max | Min | Max | Min | Max | |
| $D_{IN}$ to CLK low ($t_{SET}$) | $t_{DICL}$ | 5 | 47 | 25 | | 20 | | 10 | | ns |
| $\overline{DTACK}$ to CLK low ($t_{SET}$) | $t_{SDTCL}$ | 5 | 47 | 25 | | 20 | | 20 | | ns |
| $\overline{BR}$ to CLK low ($t_{SET}$) | $t_{SBRCL}$ | 5 | 47 | 25 | | 20 | | 20 | | ns |
| $\overline{BGACK}$ to CLK low ($t_{SET}$) | $t_{SBGCL}$ | 5 | 47 | 25 | | 20 | | 20 | | ns |
| $\overline{VPA}$ to CLK low ($t_{SET}$) | $t_{SVPACL}$ | 5 | 47 | 25 | | 20 | | 20 | | ns |
| $\overline{BERR}$ to CLK low ($t_{SET}$) | $t_{SPERCL}$ | 5 | 47 | 25 | | 20 | | 20 | | ns |
| CLK width low | $t_{CL}$ | 5 | 2 | 75 | 125 | 55 | 125 | 45 | 125 | ns |
| CLK width high | $t_{CH}$ | 5 | 3 | 75 | 125 | 55 | 125 | 45 | 125 | ns |
| CLK high to FC valid | $t_{CHFCV}$ | 5 | 6A | | 80 | | 70 | | 60 | ns |
| CLK high to $\overline{AS}$, $\overline{DS}$ low, max | $t_{CHSLX}$ | 5 | 9 | | 70 | | 60 | | 55 | ns |
| CLK low to $\overline{AS}$ high | $t_{CLSH}$ | 5 | 12 | | 80 | | 70 | | 55 | ns |
| CLK low to $\overline{DS}$ high | $t_{CLSH}$ | 5 | 12 | | 80 | | 70 | | 55 | ns |
| CLK high to R/$\overline{W}$ high, max | $t_{CHRHX}$ | 5 | 18 | | 80 | | 70 | | 60 | ns |
| CLK high to R/$\overline{W}$ low | $t_{CHRL}$ | 6 | 20 | | 80 | | 70 | | 60 | ns |
| CLK low to $D_{OUT}$ valid | $t_{CLDO}$ | 6 | 23 | | 80 | | 70 | | 55 | ns |
| CLK low to address valid | $t_{CLAV}$ | 5 | 6 | | 80 | | 70 | | 60 | ns |
| CLK high to $\overline{BG}$ low | $t_{CHGL}$ | 7 | 33 | | 80 | | 70 | | 70 | ns |

See footnotes at end of table.

TABLE IIIA. Group A inspection for device types 01, 02, and 03 - Continued.

| Test | Symbol | Figure number 8/ | Reference number 9/ | Subgroups 10 and 11 limits $T_C$ = -55°C and +110°C | | | | | | Unit |
|---|---|---|---|---|---|---|---|---|---|---|
| | | | | Device type 01 | | Device type 02 | | Device type 03 | | |
| | | | | Min | Max | Min | Max | Min | Max | |
| CLK high to $\overline{BG}$ high | $t_{CHGH}$ | 7 | 34 | | 80 | | 70 | | 60 | ns |
| CLK low to $\overline{VMA}$ low | $t_{CLVML}$ | 8 | 40 | | 80 | | 70 | | 70 | ns |
| CLK low to E transition | $t_{CLE}$ | 8 | 41 | | 85 | | 70 | | 55 | ns |

1/ At the manufacturer's option this test may be performed as a functional test.
2/ Dynamic clock as specified:

3/ All three-state measurements are to the following output levels.
$V_{OUT}$ = 0.4 V
$V_{OUT}$ = 2.4 V
Output loads circuit in accordance with figure 9.
4/ Capacitance shall be measured between the designated terminal and $V_{SS}$ at a frequency of 1 MHz and a signal amplitude of 50 mV rms.
5/ Subgroup 8 is encompassed in subgroups 10 and 11.
6/ For subgroups 8, 10, and 11 input and output voltage conditions appear in table IV.
7/ These tests are performed as a series of functional tests verifying the limits of table IIIA.
8/ Figures 5 through 8 represent the timing diagrams associated with subgroups 8, 10, and 11.
9/ The reference number refers to the position where the parameter being measured appears on figures 5, 6, 7, and 8.

Device types 01, 02, and 03

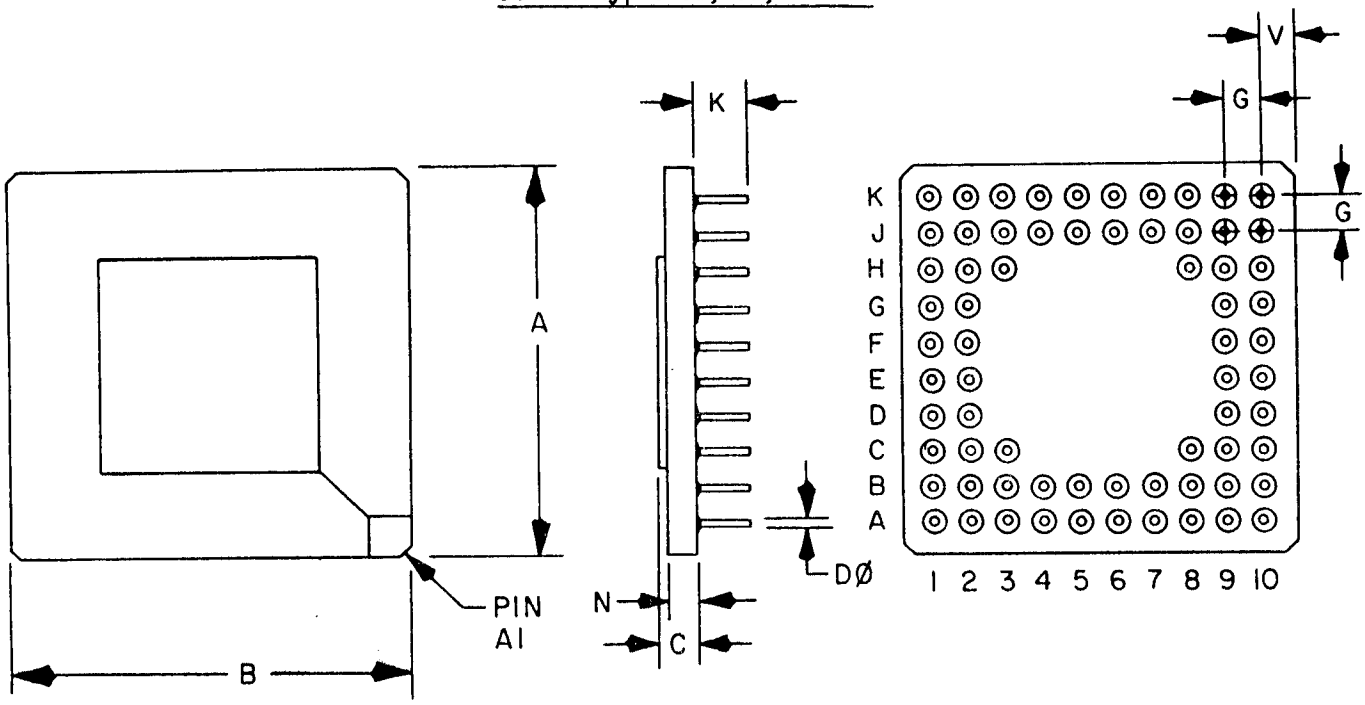


| Dim | Inches | | Millimeters | |
|---|---|---|---|---|
| | Min | Max | Min | Max |
| A | 1.040 | 1.080 | 26.41 | 27.43 |
| B | 1.040 | 1.080 | 26.41 | 27.43 |
| C | .083 | .102 | 2.11 | 2.59 |
| DØ | .017 | .024 | 0.43 | 0.61 |
| G | .100 BSC | | 2.54 BSC | |
| K | .140 | .190 | 3.56 | 4.83 |
| N | .072 | .088 | 1.83 | 2.23 |
| V | .070 | .090 | 1.78 | 2.29 |

NOTES:
1. Dimensions are in inches.
2. Metric equivalents are given for general information only.
3. Positional tolerance for leads (68 places):

   ⊕ Ø .005 (0.13 mm) Ⓜ

4. Manufacturers option, chamfer .15 (3.8 mm) maximum at 45°, all edges.
5. There shall be a .20 inch (5.1 mm) minimum spacing between any two metallized areas on the surfaces of the packages.
6. Increase maximum limit of pin diameter (DØ) by .003 inch (0.08 mm) when lead finish "A" is applied.

FIGURE 1. Case outline T (68 terminal pin grid array).

Device types 01, 02, and 03

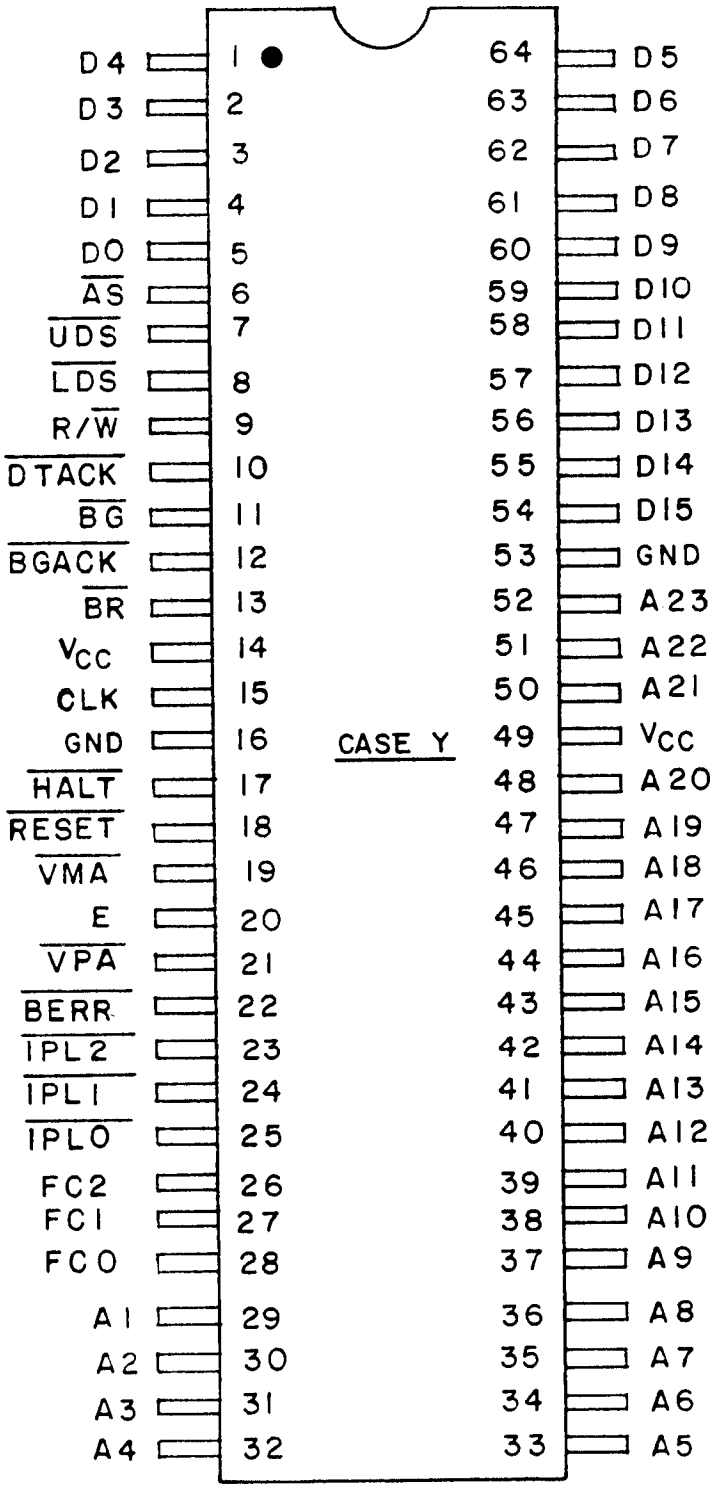


FIGURE 2. Terminal connections (top view).

Device types 01, 02, and 03

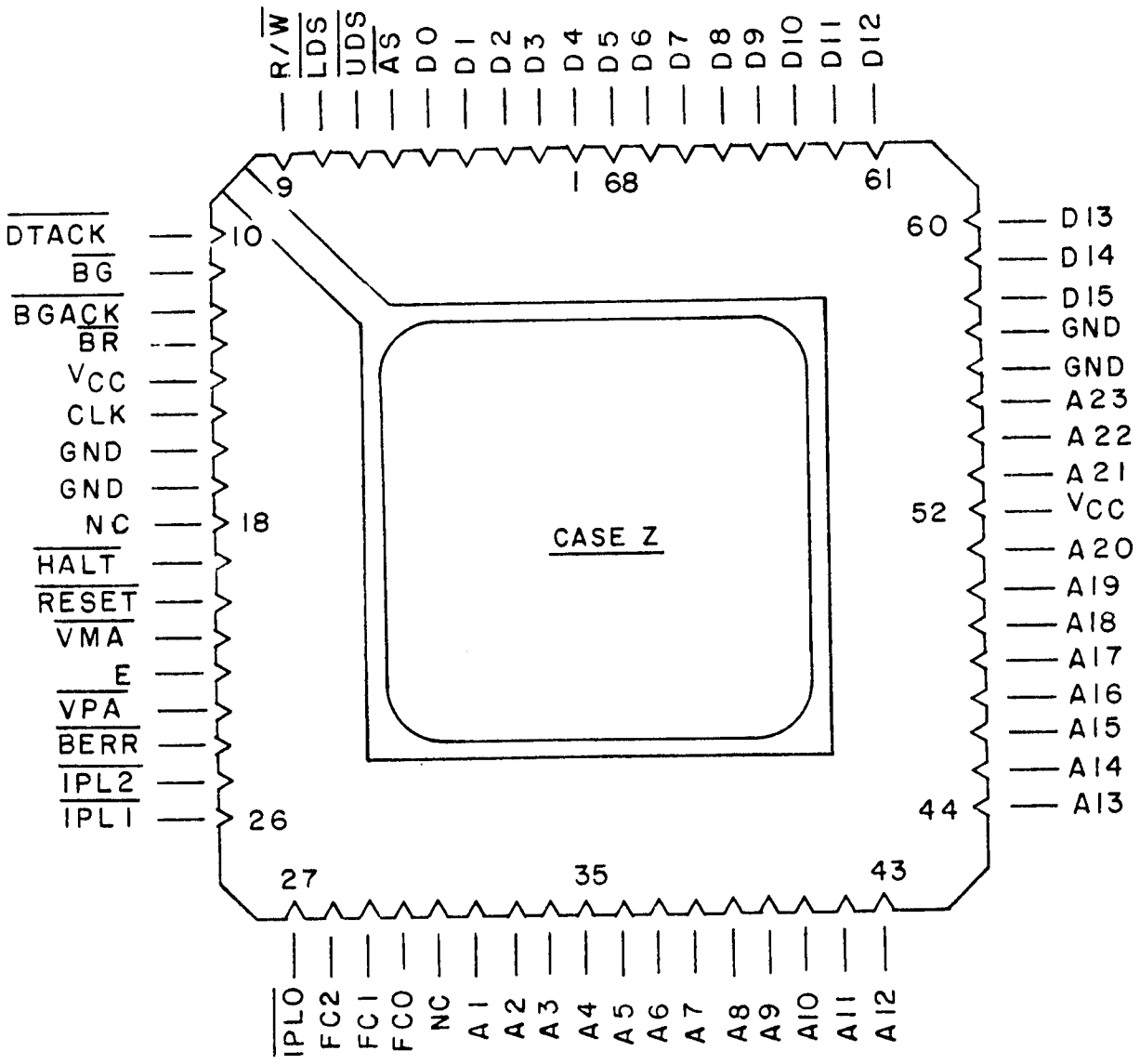


FIGURE 2. Terminal connections (top view) - Continued.

Device types 01, 02, and 03

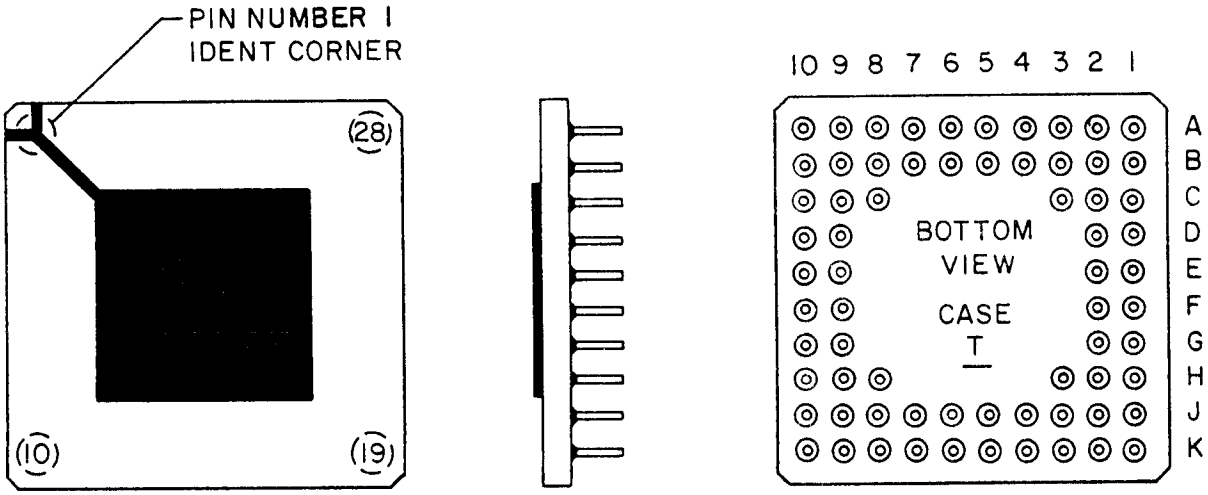


| Pin number | Function | Pin number | Function | Pin number | Function | Pin number | Function |
|---|---|---|---|---|---|---|---|
| 1A | Do not connect | 9K | A9 | 3A | D1 | 9H | A12 |
| 1B | $\overline{DTACK}$ | 10K | Do not connect | 2A | $\overline{AS}$ | 9G | A15 |
| 1C | $\overline{BGACK}$ | 10J | A14 | 2B | $\overline{LDS}$ | 9F | A18 |
| 1D | $\overline{BR}$ | 10H | A16 | 2C | $\overline{BG}$ | 9E | $V_{CC}$ |
| 1E | CLK | 10G | A17 | 2D | $V_{CC}$ | 9D | GND |
| 1F | $\overline{HALT}$ | 10F | A19 | 2E | GND | 9C | A23 |
| 1G | $\overline{VMA}$ | 10E | A20 | 2F | $\overline{RESET}$ | 9B | D14 |
| 1H | E | 10D | A21 | 2G | $\overline{VPA}$ | 8B | D11 |
| 1J | $\overline{BERR}$ | 10C | A22 | 2H | $\overline{IPL2}$ | 7B | D9 |
| 1K | Do not connect | 10B | D15 | 2J | $\overline{IPL0}$ | 6B | D6 |
| 2K | FC2 | 10A | D12 | 3J | FC1 | 5B | D3 |
| 3K | FC0 | 9A | D10 | 4J | Do not connect | 9C | DØ |
| 4K | A1 | 8A | D8 | 5J | A2 | 3B | $\overline{UDS}$ |
| 5K | A3 | 7A | D7 | 6J | A5 | 3C | R/$\overline{W}$ |
| 6K | A4 | 6A | D5 | 7J | A8 | 3H | $\overline{IPL1}$ |
| 7K | A6 | 5A | D4 | 8J | A10 | 8H | A13 |
| 7K | A7 | 4A | D2 | 9J | A11 | 8C | D13 |

FIGURE 2. Terminal connections - Continued.

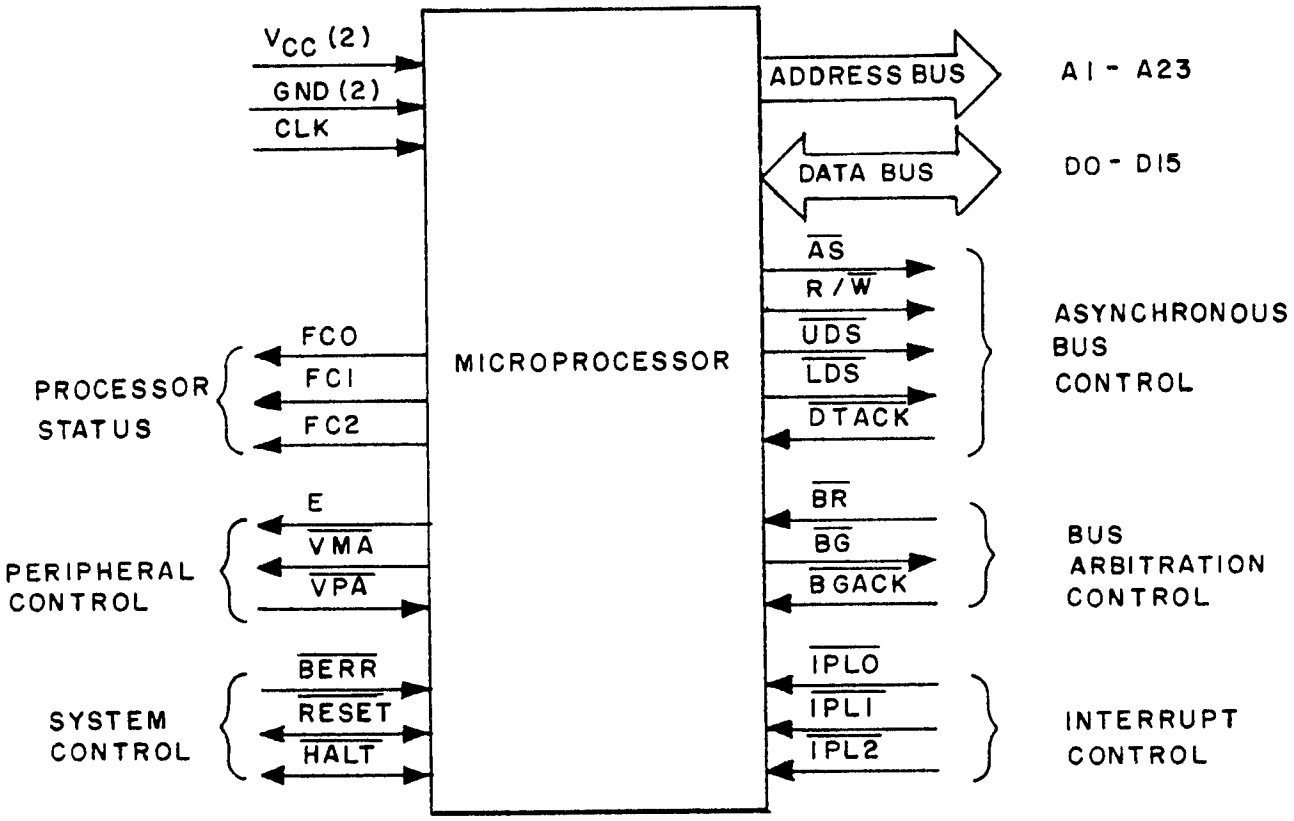


FIGURE 3. Functional block diagram and input and output signals.

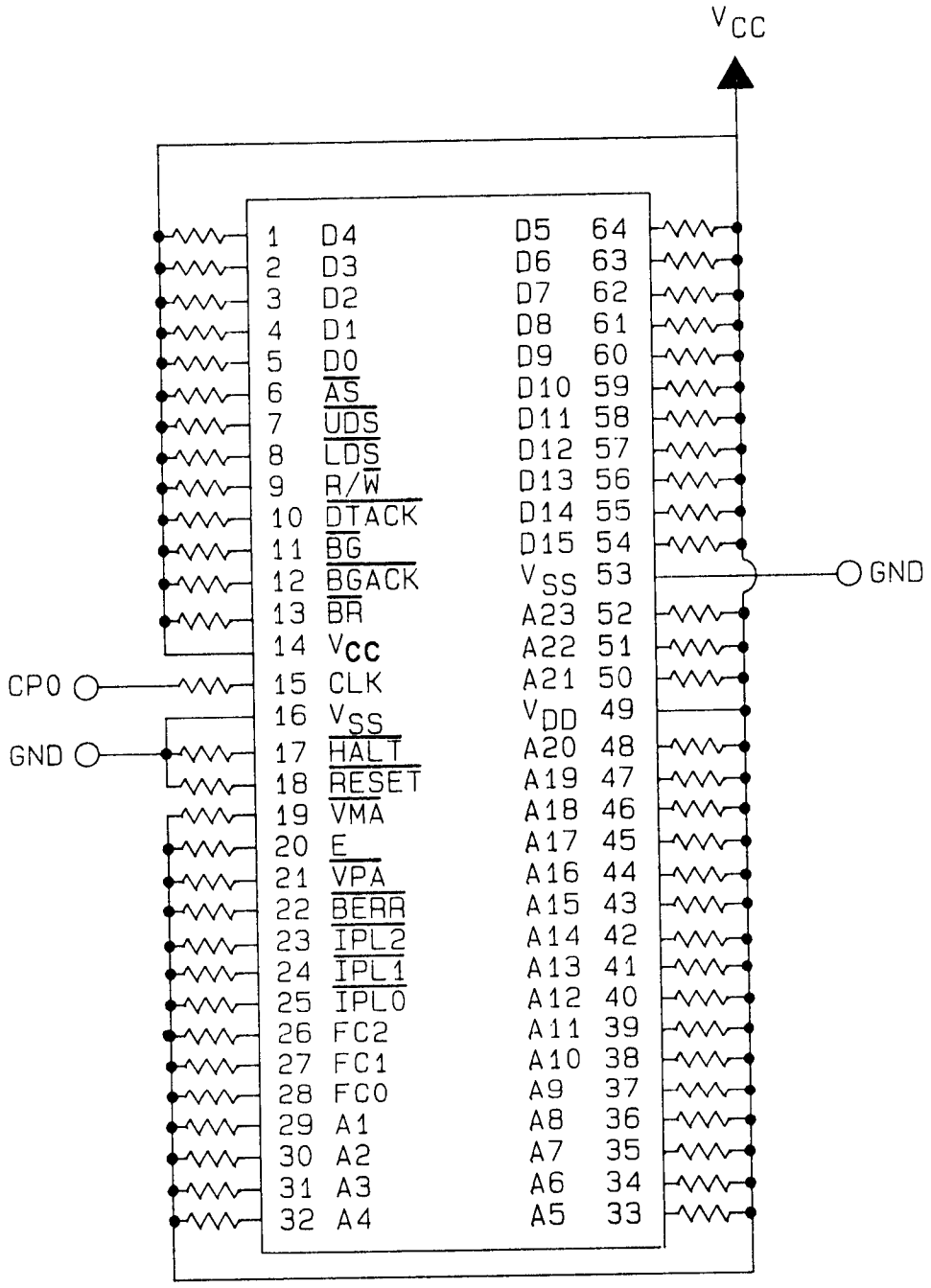


NOTES:
1. $V_{CC}$ = 5.25 to 5.5 V dc.
2. All resistors are 680Ω.
3. Clock pulse output = 200 kHz.

FIGURE 4. Burn-in circuit and timing waveforms.

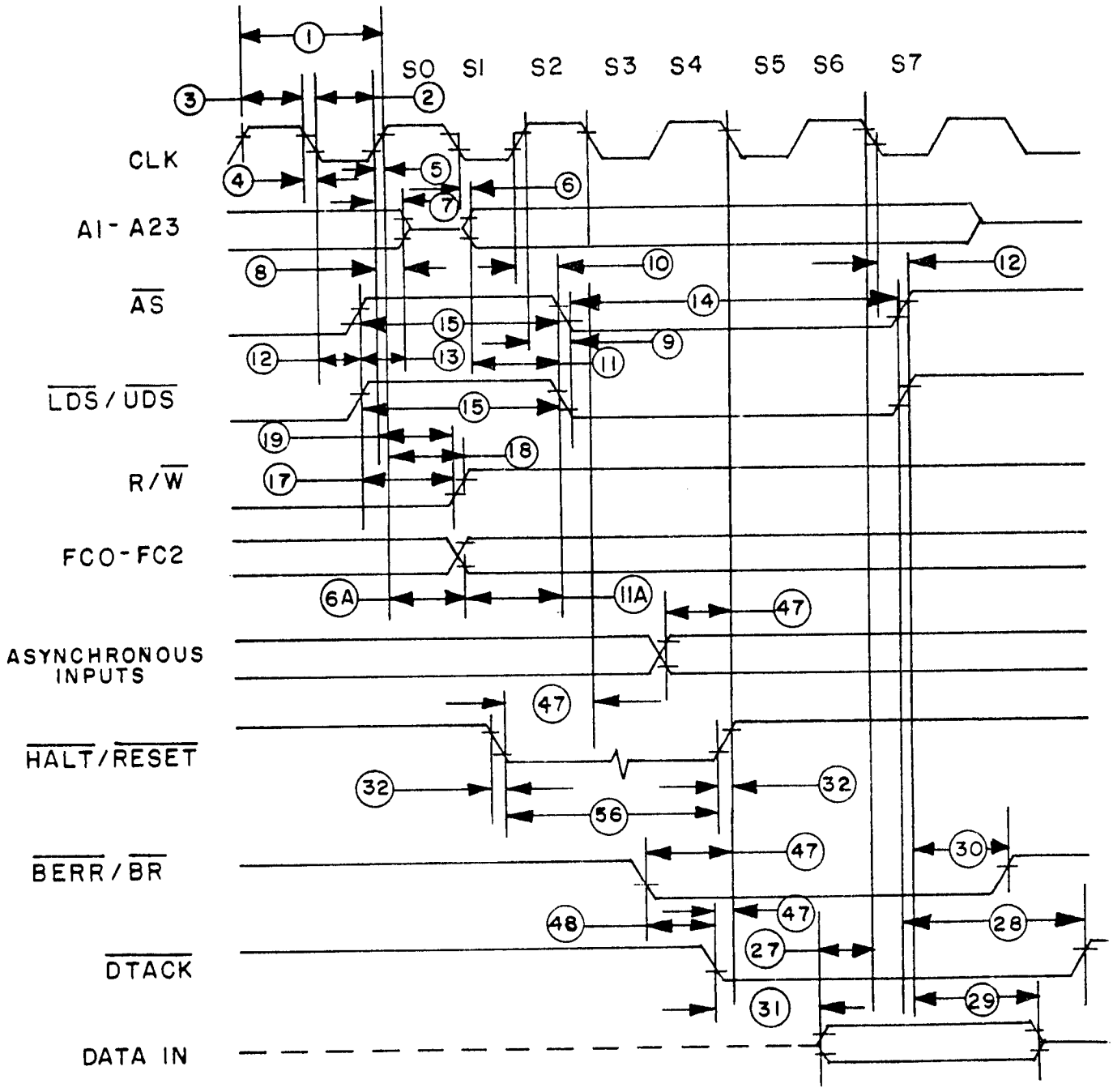


FIGURE 5. Read cycle timing.

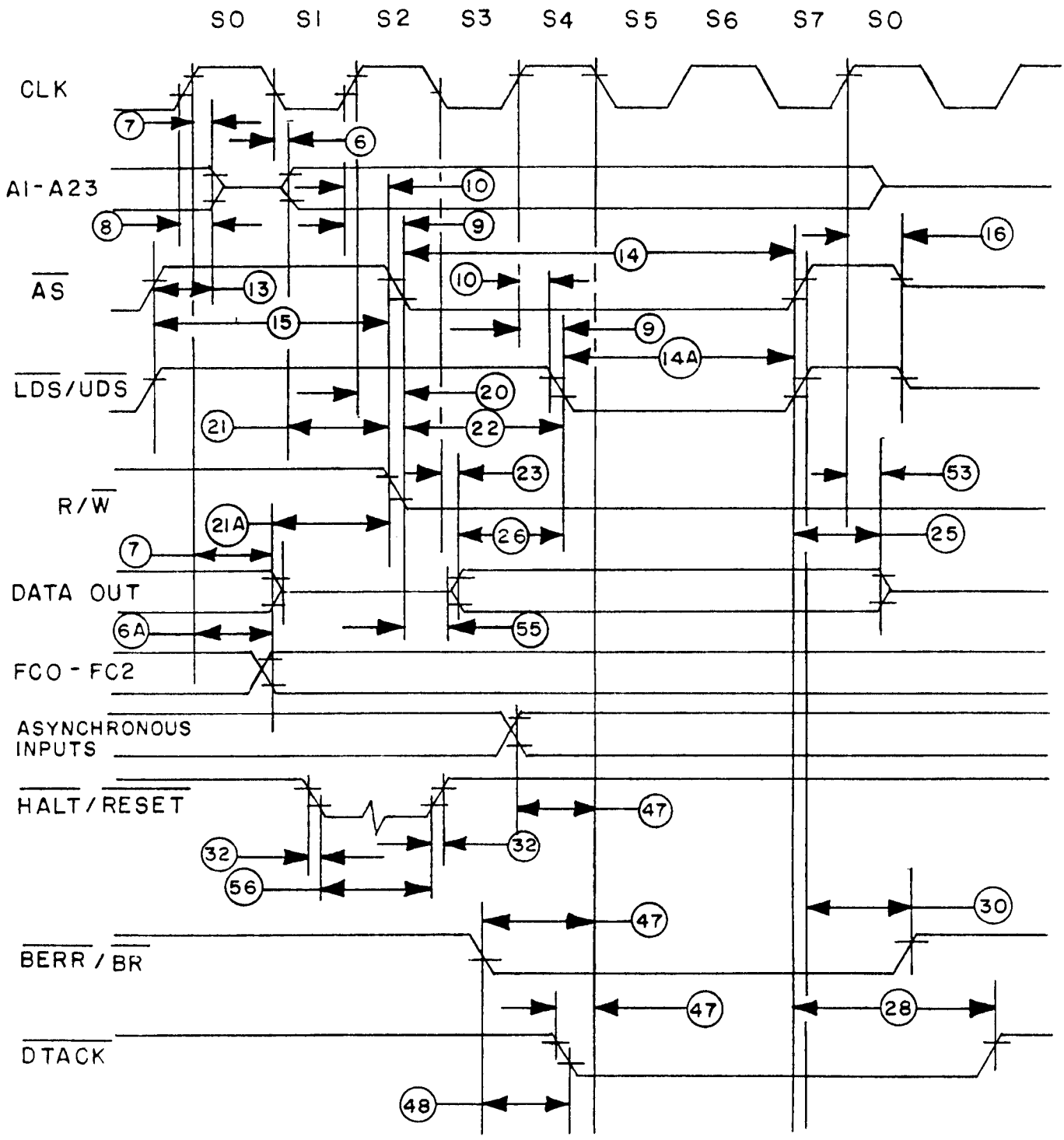


FIGURE 6. Write cycle timing.

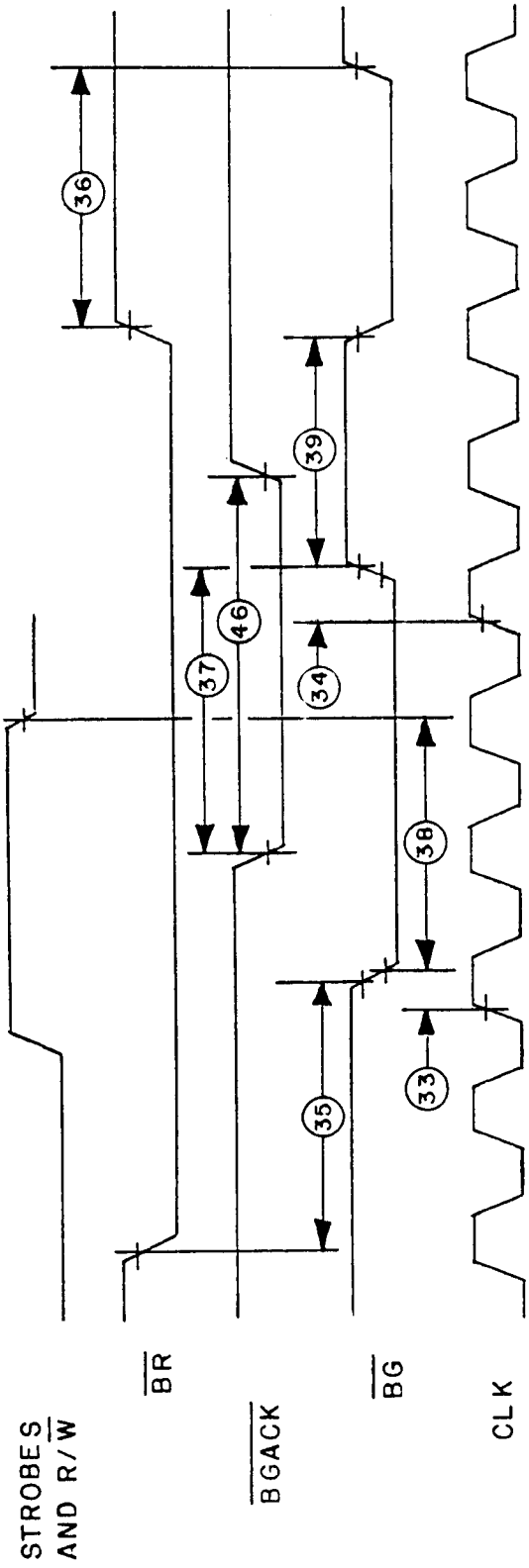


FIGURE 7. AC electrical waveforms - bus arbitration.

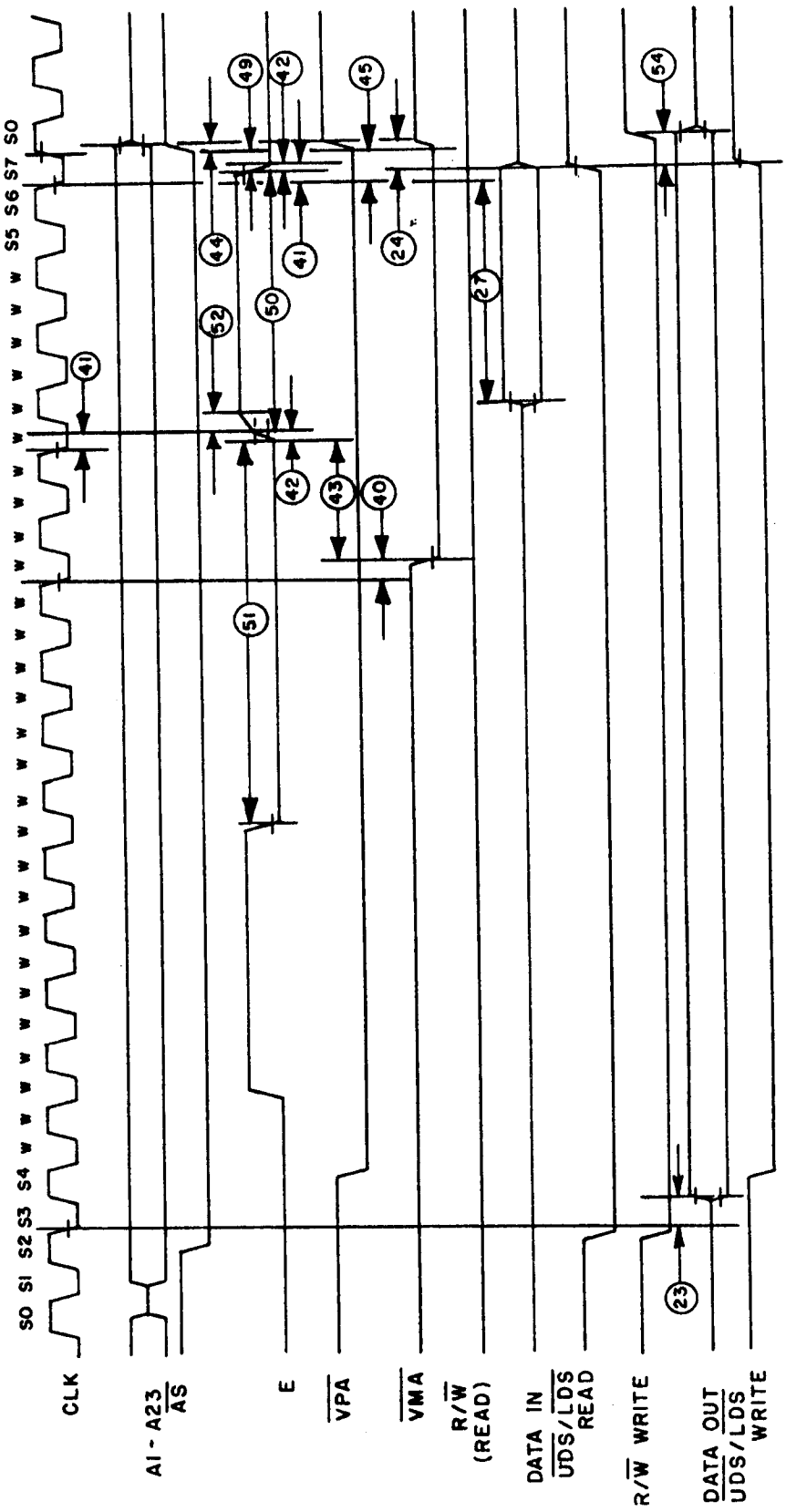


FIGURE 8. Enable/interface timing.

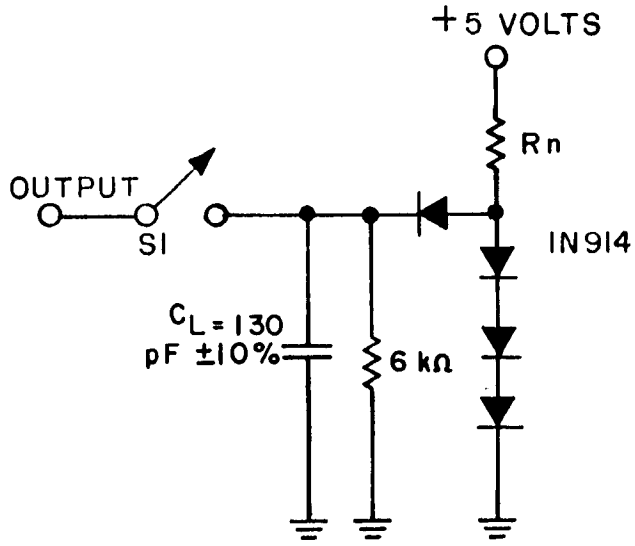


NOTES:
1. $R_n$ = 1.22 kΩ ±5% for A1 through A23, $\overline{BG}$, E and FCO-2.
2. $R_n$ = 740Ω ±5% for all other outputs.
3. $C_L$ = 130 pF ±10%.

FIGURE 9. Output load circuit for functional and ac testing.

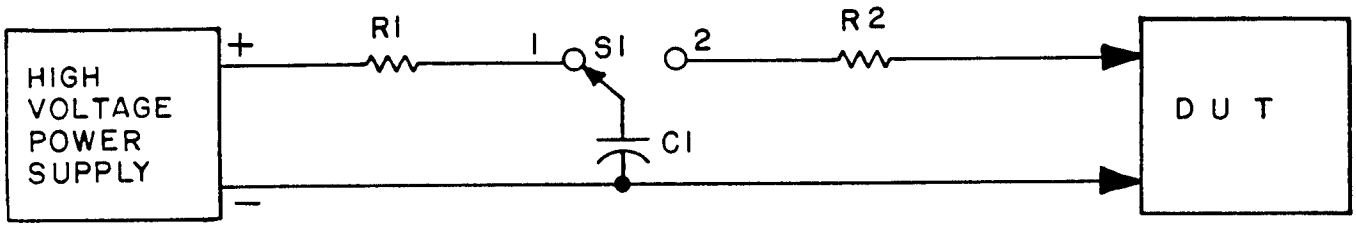


| Modes for high voltage test | | |
|---|---|---|
| Mode | + Terminal | - Terminal |
| 1 | $V_{CC}$ | Input |
| 2 | Input | GND |
| 3 | Input | Associated output |
| 3 | Associated output | Input |

NOTES:
1. $V_{ZAP}$ = 400 V minimum charge on C1.
2. 1 MΩ ≤ R1 ≤ 5 MΩ.
3. R2 = 1.5 kΩ ±5%.
4. C1 = 100 pF ±10%.
5. S1 = Hg-wetted "bounceless" relay.

FIGURE 10. High voltage ($V_{ZAP}$) test circuit.

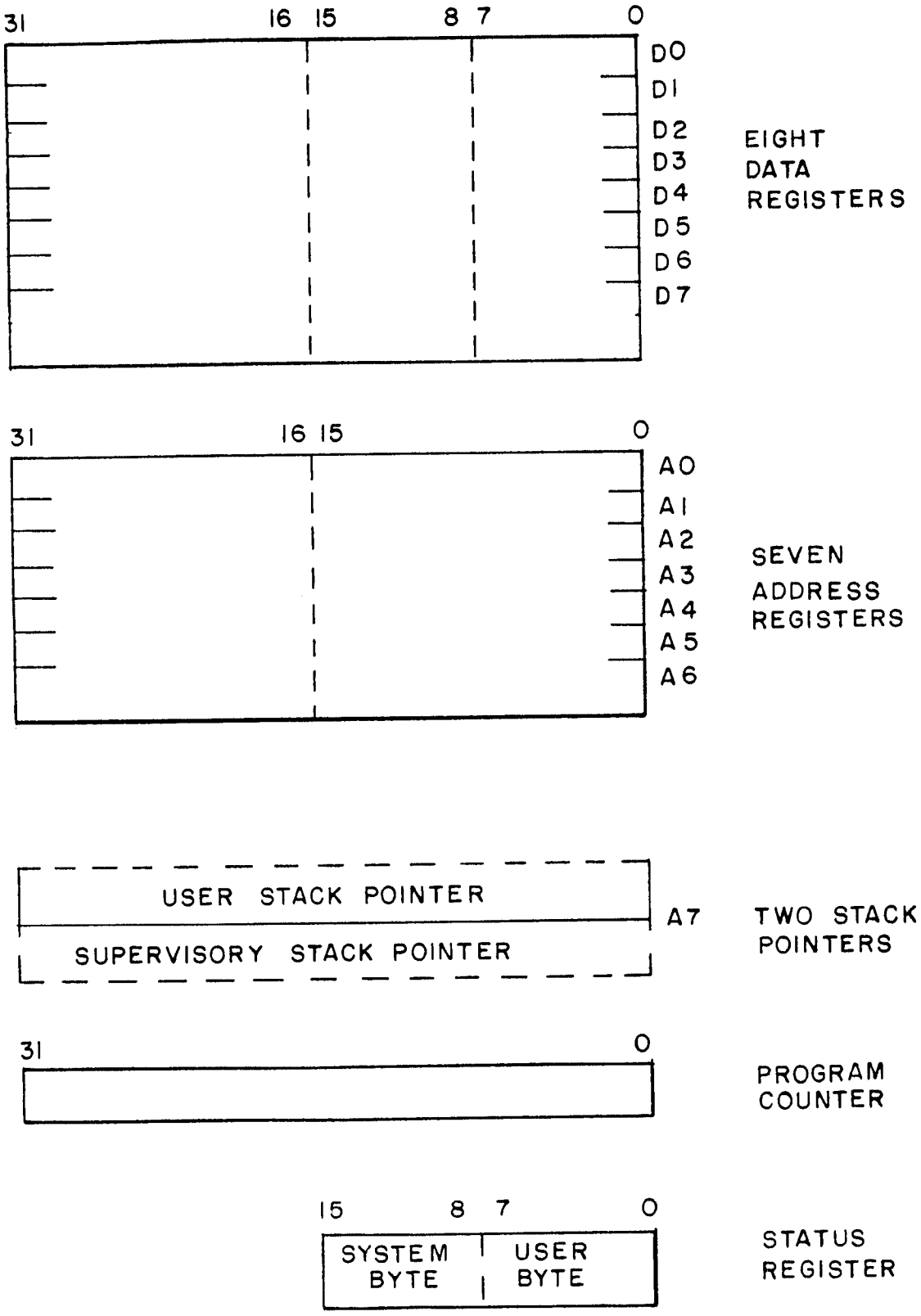


FIGURE 11. Register organization.

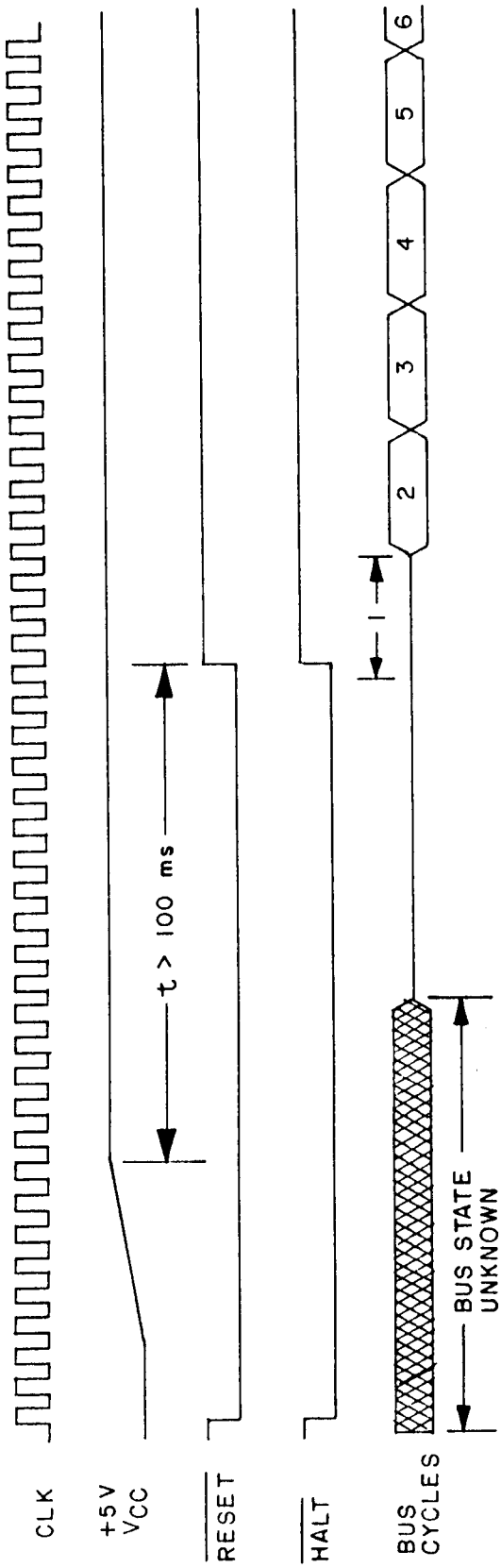


NOTES:
1. Internal start-up time.
2. SSP high read in here.
3. SSP low read in here.
4. PC high read in here.
5. PC low read in here.
6. First instruction fetched here. Data bus in read mode.

ALL CONTROL SIGNALS INACTIVE.

FIGURE 12. Reset operation timing diagram.

TABLE IV. Input voltage conditions for functional testing.

| Symbol | Parameter | Unit |
|---|---|---|
| $V_{CC}$ | 5.25 | V |
| GND | 0 | V |
| $V_{IH}$ | 2.4 | V |
| $V_{IL}$ | 0.8 | V |
| $V_{OH}$ | $\geq 1.4$ | V |
| $V_{OL}$ | $< 1.4$ | V |

TABLE VI. Instruction set.

| Mnemonic | Description | Operation | Condition codes X | N | Z | V | C |
|---|---|---|---|---|---|---|---|
| ABCD | Add decimal with extend | (Destination)$_{10}$+(Source)$_{10}$ Destination | * | U | * | U | * |
| ADD | Add binary | (Destination)+(Source) Destination | * | * | * | * | * |
| ADDA | Add address | (Destination)+(Source) Destination | - | - | - | - | - |
| ADDI | Add immediate | (Destination)+Immediate Data Destination | * | * | * | * | * |
| ADDQ | Add quick | (Destination)+Immediate Data Destination | * | * | * | * | * |
| ADDX | Add extended | (Destination)+(Source)+X Destination | * | * | * | * | * |
| AND | And logical | (Destination) (Source)+X Destination | - | * | * | 0 | 0 |
| ANDI | And immediate | (Destination) Immediate Data Destination | - | * | * | 0 | 0 |
| ASL,ASR | Arithmetic shift | (Destination)Shifted by <count> Destination | * | * | * | * | * |
| $B_{CC}$ | Branch conditionally | If $_{CC}$ then PC +d PC | - | - | - | - | - |
| BCHG | Test a bit and change | ~(<bit number>)OF Destination Z<br>~(<bit number>)OF Destination<br><bit number> OF Destination | - | - | * | - | - |
| BCLR | Test a bit and clear | ~(<bit number>)OF Destination Z<br>0 <bit number> OF Destination | - | - | * | - | - |
| BRA | Branch always | PC+d PC | - | - | - | - | - |
| BSET | Test a bit and set | ~(<bit number>)OF Destination Z<br>1 <bit number> OF Destination | - | - | * | - | - |
| BSR | Branch to subroutine | PC SP@-; PC+d PC | - | - | - | - | - |
| BTST | Test a bit | ~(<bit number>)OF Destination Z | - | - | * | - | - |

* affected 0 cleared U defined
\- unaffected 1 set

TABLE VI. Instruction set - Continued.

| Mnemonic | Description | Operation | Condition codes X | N | Z | V | C |
|---|---|---|---|---|---|---|---|
| CHK | Check register against bounds | If Dn <0 or Dn> (<ea>) then TRAP | - | * | U | U | U |
| CLR | Clear an operand | 0 Destination | - | 0 | 1 | 0 | 0 |
| CMP | Compare | (Destination)-(Source) | - | * | * | * | * |
| CMPA | Compare address | (Destination)-(Source) | - | * | * | * | * |
| CMPI | Compare immediate | (Destination)-Immediate Data | - | * | * | * | * |
| CMPM | Compare memory | (Destination)-(Source) | - | * | * | * | * |
| DBCC | Test condition, decrement and branch | If~CC then Dn-1 Dn; if Dn≠-1 then PC+d PC | - | - | - | - | - |
| DIVS | Signed divide | (Destination)/(Source) Destination | - | * | * | * | 0 |
| DIVU | Unsigned divide | (Destination)/(Source) Destination | - | * | * | * | 0 |
| EOR | Exclusive OR logical | (Destination)θ(Source) Destination | - | * | * | 0 | 0 |
| EORI | Exclusive OR immediate | (Destination) θ Immediate Data Destination | - | * | * | 0 | 0 |
| EXG | Exchange register | Rx Ry | - | - | - | - | - |
| EXT | Sign extend | (Destination)Sign-extended Destination | - | * | * | 0 | 0 |
| JMP | Jump | Destination PC | - | - | - | - | - |
| JSR | Jump to subroutine | PC~SP@-;Destination PC | - | - | - | - | - |
| LEA | Load effective address | Destination An | - | - | - | - | - |
| LINK | Link and allocate | An SP@-;SP An; SP+d SP | - | - | - | - | - |

* affected 0 cleared U defined
\- unaffected 1 set

TABLE VI. Instruction set - Continued.

| Mnemonic | Description | Operation | Condition codes X | N | Z | V | C |
|---|---|---|---|---|---|---|---|
| LSL,LSR | Logical shift | (Destination)Shifted by <count> Destination | * | * | * | 0 | * |
| MOVE | Move data from source destination | (Source) Destination | - | * | * | 0 | 0 |
| MOVE to CCR | Move to condition code | (Source) CCR | * | * | * | * | * |
| MOVE to SR | Move to the status register | (Source) SR | * | * | * | * | * |
| MOVE to SR | Move from the status register | SR Destination | - | - | - | - | - |
| MOVE USP | Move user stack pointer | USP An; An USP | - | - | - | - | - |
| MOVEA | Move address | (Source) Destination | - | - | - | - | - |
| MOVEM | Move multiple registers | Registers Destination<br>(Source) Registers | - | - | - | - | - |
| MOVEP | Move peripheral data | (Source) Registers | - | - | - | - | - |
| MOVEQ | Move quick | Immediate Data Destination | - | * | * | 0 | 0 |
| MULS | Signed multiply | (Destination)*(Source) Destination | - | * | * | 0 | 0 |
| MULU | Unsigned multiply | (Destination)*(Source) Destination | - | * | * | 0 | 0 |
| NBCD | Negate decimal with extend | $0-(\text{Destination})_{10}-X$ Destination | * | U | * | U | * |
| NEG | Negate | 0-(Destination) Destination | * | * | * | * | * |
| NEGX | Negate with extend | 0-(Destination)-X Destination | * | * | * | * | * |
| NOP | No operation | - | - | - | - | - | - |
| NOT | Logical complement | ~(Destination) Destination | - | * | * | 0 | 0 |

* affected  0 cleared  U defined
\- unaffected  1 set

TABLE VI. Instruction set - Continued.

| Mnemonic | Description | Operation | Condition codes X | N | Z | V | C |
|---|---|---|---|---|---|---|---|
| OR | Inclusive OR logical | (Destination)v(Source) Destination | - | * | * | 0 | 0 |
| ORI | Inclusive OR immediate | (Destination)vImmediate Data Destination | - | * | * | 0 | 0 |
| PEA | Push effective address | (Destination) SP@- | - | - | - | - | - |
| RESET | Reset external devices | - | - | - | - | - | - |
| ROL,ROR | Rotate (without extend) | (Destination) Rotated by <count> Destination | - | * | * | 0 | * |
| ROXL,ROXR | Rotate (with extend) | (Destination) Rotated by <count> Destination | * | * | * | 0 | * |
| RTE | Return from exception | SP@+ SR; SP@+ PC | * | * | * | * | * |
| RTR | Return and restore condition codes | SP@+ CC; SP@+ PC | * | * | * | * | * |
| RTS | Return from subroutine | SP@+ PC | - | - | - | - | - |
| SBCD | Subtract decimal with extend | $(Destination)_{10}-(Source)_{10}-X$ Destination | * | U | * | U | * |
| $S_{CC}$ | Set according to condition | If CC then 1's Destination else 0's Destination | - | - | - | - | - |
| STOP | Load status register and stop | Immediate Data SR; STOP | * | * | * | * | * |
| SUB | Subtract binary | (Destination)-(Source) Destination | * | * | * | * | * |
| SUBA | Subtract address | (Destination)-(Source) Destination | - | - | - | - | - |
| SUBI | Subtract immediate | (Destination)-Immediate Data Destination | * | * | * | * | * |
| SUBQ | Subtract quick | (Destination)-Immediate Data Destination | * | * | * | * | * |
| SUBX | Subtract with extend | (Destination)-(Source)-X Destination | * | * | * | * | * |

* affected  0 cleared  U defined
\- unaffected  1 set

TABLE VI. Instruction set - Continued.

| Mnemonic | Description | Operation | Condition codes | | | | |
|---|---|---|---|---|---|---|---|
| | | | X | N | Z | V | C |
| SWAP | Swap register halves | Register 31:16 Register 15:0 | - | * | * | 0 | 0 |
| TAS | Test and set an operand | (Destination) Tested CC; 1 7 OF Destination | - | * | * | 0 | 0 |
| TRAP | Trap | PC SSP@-; SR SSP@-;(Vector) PC | - | - | - | - | - |
| TRAPV | Trap on overflow | If V then TRAP | - | - | - | - | - |
| TST | Trap an operand | (Destination) Tested CC | - | * | * | 0 | 0 |
| UNLK | Unlink | An SP; SP@+ An | - | - | - | - | - |

= bit number
* affected 0 cleared U defined
\- unaffected 1 set

4.5 Methods of inspection. Methods of inspection shall be specified as follows.

4.5.1 Voltage and current. All voltage values given are referenced to the microcircuit ground terminal. Currents given are conventional and positive when flowing into the referenced terminal.

4.5.2 High-voltage ($V_{ZAP}$) test of input protection circuits. One input terminal of the device under test (DUT) shall be subjected to a voltage pulse of 400 V from a 100 pF source in the following test sequence:

a. Measure $I_{IH}$ and $I_{IL}$ at one input terminal of the device under tests at +25°C. These measurements shall be made in accordance with table III herein. The test limits for a single terminal measurement of $I_{IH}$ and $I_{IL}$ shall be as specified in table III.

b. Apply the test voltage ($V_{ZAP}$ = 400 V) to the same terminal selected for leakage current measurements. Apply $V_{ZAP}$ in a 2-pulse sequence as follows and in accordance with the test circuit as shown on figure 10.

(1) Input (-) to GND.

(2) Input (+) to GND.

c. Within 24 hours repeat the $I_{IH}$ and $I_{IL}$ measurements on the same terminal as performed above. At this time a DUT exhibiting leakage currents in excess of the specified limits is defective.

5. PACKAGING

5.1 Packaging requirements. The requirements for packaging shall be in accordance with MIL-M-38510. In addition, all devices shall be in contact with a conductive material which shorts all leads together to prevent electrostatic damage.

6. NOTES

(This section contains information of a general or explanatory nature that may be helpful, but is not mandatory.)

6.1 Notes. The notes specified in MIL-M-38510 are applicable to this specification.

6.2 Table V, test vectors. Table V, forms a part of this detail specification to the extent that is required by 3.5 herein. Table V is a software control program of the sequence of vectors needed for driving the devices represented in this detail specification as part of the inspection required by table II herein. Table V is generated only when a qualified source exists for this specification.

6.3 Intended use. Microcircuits conforming to this specification are intended for original equipment design application and logistic support of existing equipment.

6.4 Ordering data. The contract or purchase order should specify the following:

a. Complete PIN (see 1.2).

b. Requirement for delivery of one copy of the data (see 4.4) pertinent to the device manufacturer, if applicable.

c. Requirement for certificate of compliance, if applicable.

d. Requirement for notification of change of product or process to the contracting activity in addition to notification to the qualifying activity, if applicable.

e. Requirement for failure analysis (including required test condition of method 5003 of MIL-STD-883), corrective action, and reporting of results, if applicable.

f. Requirement for product assurance options.

g. Requirement for special carriers, lead lengths, or lead forming, if applicable.

h. Requirement for "JAN" marking.

6.5 Register organization.

A block diagram of the register organization is shown on figure 11.

Data registers. Each data register is 32 bits wide. Byte operands occupy the low order 8 bits, word operands the low order 16 bits, and long operands the entire 32 bits. The least significant bit is addressed as bit zero; the most significant bit is addressed as bit 31. When a data register is used as either a source or destination operand, only the appropriate low order portion is changed; the remaining high order portion is neither used nor changed.

Address registers. Each address register and the stack pointer is 32 bits wide and holds a full 32 bit address. Address registers do not support byte sized operands. Therefore, when an address register is used as a source operand, either the low order word or the entire long word operand is used depending upon the operation size. When an address register is used as the destination operand, the entire register is affected regardless of the operation size. If the operation size is word, any other operands are sign extended to 32 bits before the operation is performed.

Stacks and queues.

In addition to supporting the array data structure with the index addressing mode, the microprocessor also supports stack and queue data structures with the address register indirect postincrement and predecrement addressing modes. A stack is a last-in-first-out (LIFO) list, a queue is a first-in-first-out (FIFO) list. When data is added to a stack or queue, it is "pushed" into the structure; when it is removed, it is "pulled" from the structure. The system stack is used implicitly by many instructions; user stacks and queues may be created and maintained through the addressing modes.

System stack. Address register seven (A7) is the system stack pointer (SP). The system stack pointer is either the supervisor stack pointer (SSP) or the user stack pointer (USP), depending on the state of the S-bit in the status register. If the S-bit indicates supervisor state, the SSP is the active system stack pointer and the USP cannot be referenced as an address register. If the S-bit indicates user state, the USP is the active system stack pointer and the SSP cannot be referenced. Each system stack fills from high memory to low memory.

The program counter is saved on the active system stack on subroutine calls, and restored from the active system stack on returns. On the other hand, both the program counter and the status register are saved on the supervisor stack during the processing of traps and interrupts. Thus, the correct execution of the supervisor state code is not dependent on the behavior of user code and user programs may use the user stack pointer arbitrarily.

In order to keep data on the system stack aligned properly, data entry on the stack is restricted so that data is always put in the stack on a word boundary. Thus, byte data is pushed on or pulled from the system stack in the high-order half of the word; the lower half is unchanged.

User stacks. User stacks can be implemented and maintained by employing the address register indirect with postincrement and predecrement addressing modes. Using the address register (one of A0 through A6), the user may implement stacks which are filled either from high memory to low memory, or vice versa. The important things to remember are:

a. Using predecrement, the register is decremented before its contents are used as the pointer into the stack.

b. Using postincrement, the register is incremented after its contents are used as the pointer into the stack.

c. Byte data must be put on the stack in pairs when mixed with word or long data so that the stack will not get misaligned when the data is retrieved. Word and long accesses must be on word boundary (even) addresses.

6.6 Terminal and pin definition.

The input and output signals can be functionally organized into groups as shown on figure 3.

Address bus (A1 through A23). This 23-bit, unidirectional, three-state bus is capable of addressing 8 megawords of data. It provides the address for bus operation during all cycles except interrupt cycles. During interrupt cycles, address lines A1, A2, and A3 provide information about what level interrupt is being serviced while address lines A4 through A23 are all set to a logic high.

Data bus (D0 through D15). This 16-bit, bidirectional, three-state bus is the general purpose data path. It can transfer and accept data in either word or byte length. During an interrupt acknowledge cycle, the external device supplies the vector number on data lines D0 through D7.

Asynchronous bus control. Asynchronous data transfers are handled using the following control signals: address strobe, read/write, upper and lower data strobes, and data transfer acknowledge. These signals are explained in the following paragraphs.

Address strobe ($\overline{AS}$). This signal indicates that there is a valid address on the address bus.

Read/write (R/$\overline{W}$). This signal defines the data bus transfer as a read or write cycle. The R/$\overline{W}$ signal also works in conjunction with the upper and lower data strobes as explained in the following paragraph.

Data transfer acknowledge ($\overline{DTACK}$). This input indicates that the data transfer is completed. When the processor recognizes $\overline{DTACK}$ during a read cycle, data is latched and the bus cycle terminated. When $\overline{DTACK}$ is recognized during a write cycle, the bus cycle is terminated.

Bus arbitration control. These three signals form a bus arbitration circuit to determine which device will be the bus master device.

Upper and lower data strobes ($\overline{UDS}$, $\overline{LDS}$). These signals control the data on the data bus as shown in table VII herein. When the R/$\overline{W}$ line is high, the processor will read from the data bus as indicated. When the R/$\overline{W}$ line is low, the processor will write to the data bus as shown.

TABLE VII. Data strobe control of data bus.

| $\overline{UDS}$ | $\overline{LDS}$ | R/$\overline{W}$ | D8-D15 | D0-D7 |
|---|---|---|---|---|
| High | High | --- | No valid data | No valid data |
| Low | Low | High | Valid data bits 8-15 | Valid data bits 0-7 |
| High | Low | High | No valid data | Valid data bits 0-7 |
| Low | High | High | Valid data bits 8-15 | No valid data |
| Low | Low | Low | Valid data bits 8-15 | Valid data bits 0-7 |
| High | Low | Low | Valid data bits 0-7 | Valid data bits 0-7 |
| Low | High | Low | Valid data bits 8-15 | Valid data bits 8-15 |

Bus request ($\overline{BR}$), This input is wire ORed with all other devices that could be bus masters. This input indicates to the processor that some other device desires to become the bus master.

Bus grant ($\overline{BG}$). This output indicates to all other potential bus master devices that the processor will release bus control at the end of the current bus cycle.

Bus grant acknowledge ($\overline{BGACK}$). This input indicates that some other device has become the bus master. This signal cannot be asserted until the following four conditions are met:

a. A bus grant has been received.

b. Address strobe is inactive which indicates that the microprocessor is not using the bus.

c. Data transfer acknowledge is inactive which indicates that either memory or the peripherals are not using the bus.

d. Bus grant acknowledge is inactive which indicates that no other device is still claiming bus mastership.

Interrupt control ($\overline{IPL0}$, $\overline{IPL1}$, $\overline{IPL2}$). These input pins indicate the encoded priority level of the device requesting an interrupt. Level seven is the highest priority while level zero indicates that no interrupts are requested. The least significant bit is contained in $\overline{IPL0}$ and the most significant bit is contained in $\overline{IPL2}$.

System control. The system control inputs are used to either reset or halt the processor and to indicate to the processor that bus errors have occurred. The three system control inputs are explained in the following paragraphs.

Bus error ($\overline{BERR}$). This input informs the processor that there is a problem with the cycle currently being executed. Problems may be a result of:

a. Nonresponding devices.

b. Interrupt vector number acquisition failure.

c. Illegal access request as determined by a memory management unit.

d. Other application dependent errors.

The bus error signal interacts with the halt signal to determine if exception processing should be performed or the current bus cycle should be retired.

Reset ($\overline{RESET}$). This bidirectional signal line acts to reset (initiate a system initialization sequence) the processor in response to an external reset signal. An internally generated reset (result of a $\overline{RESET}$ instruction) causes all external devices to be reset and the internal state of the processor is not affected. A total system reset (processor and external devices) is the result of external halt and reset signals applied at the same time (see figure 12 herein).

HALT ($\overline{HALT}$). When this bidirectional line is driven by an external device, it will cause the processor to stop at the completion of the current bus cycle. When the processor has been halted using this input, all control signals are inactive and all three-state lines are put in their high impedance state.

When the processor has stopped executing instructions, such as in a double bus fault condition, the halt line is driven by the processor to indicate to external devices that the processor has stopped.

Peripheral control. These control signals are used to allow the interfacing of synchronous peripheral devices with the asynchronous processor. These signals are explained in the following paragraphs.

Enable (E). This signal is the standard enable signal common to all peripheral devices. The period for this output is 10 clock periods (6 clocks low; 4 clocks high).

Valid peripheral address ($\overline{VPA}$). This input indicates that the device or region addressed is a family device and that data transfer should coincide with the enable (E) signal. This input also indicates that the processor should use automatic vectoring for an interrupt.

Valid memory address ($\overline{VMA}$). This output is used to indicate to peripheral devices that there is a valid address on the address bus and the processor is synchronized to enable. This signal only responds to a valid peripheral address ($\overline{VPA}$) input which indicates that the peripheral is a family device.

Processor status (FC0, FC1, FC2). These function code outputs indicate the mode (user or supervisor) and the cycle type currently being executed as shown in table VIII. The information indicated by the function code outputs is valid whenever address strobe ($\overline{AS}$) is active.

TABLE VIII. Function code outputs.

| FC2 | FC1 | FC0 | Cycle type |
|---|---|---|---|
| Low | Low | Low | (Undefined, reserved) |
| Low | Low | High | User data |
| Low | High | Low | User program |
| Low | High | High | (Undefined, reserved) |
| High | Low | Low | (Undefined, reserved) |
| High | Low | High | Supervisor data |
| High | High | Low | Supervisor program |
| High | High | High | Interrupt acknowledge |

Clock (CLK). The clock input is a TTL compatible signal that is internally buffered for development of the internal clocks needed by the processor. The clock input shall be a constant frequency.

6.7 Logistic support. Lead material and finish (see 3.3), are interchangeable. Unless otherwise specified, microcircuits acquired for Government logistic support will be acquired to device class B (see 1.2.2), and lead material and finish "C" (see 3.3). Longer length leads and lead forming shall not affect the PIN.

6.8 Handling. MOS microprocessors should be handled with certain precautions to avoid damage due to the discharge of accumulated static charge. These NMOS devices are fabricated with a silicon gate technology, including input protection, which reduces the susceptibility to damage; however, the following handling practices are recommended.

a. Devices should be handled on benches with conductive and grounded surface.

b. Ground test equipment and tools.

c. Handling of devices by the leads should be avoided.

d. Devices should be stored in conductive carriers.

e. Avoid uses of plastic, rubber, or silk in MOS areas.

6.9 Substitutability. The cross-reference information below is presented for the convenience of users. Microcircuits covered by this specification will functionally replace the listed generic-industry type. Generic-industry microcircuit types may not have equivalent operational performance characteristics across military temperature ranges or reliability factors equivalent to MIL-M-38510 device types and may have slight physical variations in relation to case size. The presence of this information shall not be deemed as permitting substitution of generic-industry types for MIL-M-38510 types or as a waiver of any of the provisions of MIL-M-38510.

| Military device type | Generic-industry type |
|---|---|
| 01 | 68000-6 |
| 02 | 68000-8 |
| 03 | 68000-10 |

## CONCLUDING MATERIAL

Custodians:
Air Force - 17
Navy - EC
Army - ER

Review activities:
Army - AR, MI
Navy - OS, SH
Air Force - 11, 19, 85, 99
DLA - ES

User activities:
Army - SM
Navy - AS, CG, MC

Preparing activity:
Air Force - 17

Agent:
DLA - ES

(Project 5962-1174)