MIL-M-38510/503B
30 SEPTEMBER 1987
SUPERSEDING
MIL-M-38510/503A(USAF)
30 August 1984

MILITARY SPECIFICATION

MICROCIRCUITS, DIGITAL, BIPOLAR, PROGRAMMABLE LOGIC, MONOLITHIC SILICON

This specification is approved for use by all Departments and Agencies of the Department of Defense.

1. SCOPE

1.1 Scope. This specification covers the detail requirements for monolithic silicon, bipolar, programmable array logic microcircuits which employ titanium-tungsten resistors as the fusible link or programming element. Two product assurance classes and a choice of case outlines and lead finishes are provided and are reflected in the complete part number.

1.2 Part number. The part number shall be in accordance with MIL-M-38510 (see 3.6).

1.2.1 Device types. The device types shall be as follows:

Device type	Circuit	I_{CC} (mA)	t_{PHL} t_{PLH} (ns)
01,10,19	10-input 8-output AND-OR gate array	90,90,45	45,30,45
02,11,20	12-input 6-output AND-OR gate array	90,90,45	45,30,45
03,12,21	14-input 4-output AND-OR gate array	90,90,45	45,30,45
04,13,22	16-input 2-output AND-OR gate array	90,90,45	45,30,45
05,14,23	16-input 2-output AND-OR/and-or/invert gate array	90,90,45	45,30,45
06,15,24	10-input 8-output AND-OR invert gate array	90,90,45	45,30,45
07,16,25	12-input 6-output AND-OR invert gate array	90,90,45	45,30,45
08,17,26	14-input 4-output AND-OR invert gate array	90,90,45	45,30,45
09,18,27	16-input 2-output AND-OR invert gate array	90,90,45	45,30,45

1.2.2 Device class. The device class shall be the product assurance level as defined in MIL-M-38510.

1.2.3 Case outlines. The case outlines shall be designated as follows:

Outline letter	Case outline, (see MIL-M-38510, appendix C)
R	D-8 (20-lead, 1/4" x 1 1/16"), dual-in-line package
2	C-2 (20-terminal, .350" x .350"), square chip carrier package
Y	Figure 1, (20-lead, 3/8" x 3/8"), flat package

Beneficial comments (recommendations, additions, deletions) and any pertinent data which may be of use in improving this document should be addressed to: Rome Air Development Center, (RBE-2), Griffiss AFB, NY 13441, by using the self-addressed Standardization Document Improvement Proposal (DD Form 1426) appearing at the end of this document or by letter.

DISTRIBUTION STATEMENT A. Approved for public release; distribution is unlimited.

1.3 Absolute maximum ratings.

Supply voltage- - - - - - - - - - - - - - - - - -	-0.5 V dc to +12.0 V dc
Input voltage range - - - - - - - - - - - - - - -	-1.5 V dc to +5.5 V dc
Storage temperature range - - - - - - - - - - - -	-65°C to +150°C
Lead temperature (soldering, 10 seconds)- - - -	+260°C
Thermal resistance, junction-to-case (θ_{JC}):1/ 2/	(See appendix C, MIL-M-38510)
Output voltage applied- - - - - - - - - - - - - -	-1.5 V dc to +12 V dc
Output sink current - - - - - - - - - - - - - - -	100 mA
Maximum power dissipation, (P_D) 2/ - - - - - - -	2.0 W
Maximum junction temperature (T_J)- - - - - - - -	+175°C

1.4 Recommended operating conditions.

Supply voltage- - - - - - - - - - - - - - - - - -	4.5 V dc minimum to 5.5 Vdc maximum
Minimum high level input voltage (V_{IH})- - - - -	2.0 V dc
Maximum low level input voltage (V_{IL}) - - - - -	0.8 V dc
Case operating temperature range (T_C) - - - - -	-55°C to +125°C

2. APPLICABLE DOCUMENTS

2.1 Government documents.

2.1.1 Specification and standard. The following specification and standard form a part of this specification to the extent specified herein. Unless otherwise specified, the issues of these documents shall be those listed in the issue of the Department of Defense Index of Specifications and Standards and supplement thereto, cited in the solicitation.

SPECIFICATION

MILITARY

MIL-M-38510 - Microcircuits, General Specification for.

STANDARD

MILITARY

MIL-STD-883 - Test Methods and Procedures for Microelectronics.

(Copies of the specification and standard required by manufacturers in connection with specific acquisition functions should be obtained from the contracting activity or as directed by the contracting activity.)

2.2 Order of precedence. In the event of a conflict between the text of this specification and the references cited herein, (except for associated detail specification sheets or MS standards), the text of this specification shall take precedence. Nothing in this specification, however shall supersede applicable laws and regulations unless a specific exemption has been obtained.

3. REQUIREMENTS

3.1 Detail specifications. The individual item requirements shall be in accordance with MIL-M-38510, and as specified herein. When manufacturer-programmed devices are delivered to the user, an altered item drawing shall be prepared by the contracting activity to specify the required program configuration.

3.2 Design, construction, and physical dimensions. The design, construction, and physical dimensions shall be as specified in MIL-M-38510, and herein.

1/ Heat sinking is recommended to reduce the junction temperature.
2/ Must withstand the added P_D due to short circuit (e.g., I_{OS}) test.

3.2.1 Terminal connections. The terminal connections shall be as specified on figure 2.

3.2.2 Truth table.

3.2.2.1 Unprogrammed devices. The truth table for unprogrammed devices for contracts involving no altered item drawing shall be as specified on figure 3. When required in groups A, B, or C (see 4.4), the devices shall be programmed by the manufacturer prior to test. A minimum of 50 percent of the total number of fuses shall be programmed or at least 25 percent of the total number of fuses to any altered item drawing.

3.2.2.2 Programmed devices. The truth table for programmed devices shall be as specified by the altered item drawing.

3.2.3 Logic diagram. The logic diagram for unprogrammed devices shall be as specified on figure 4.

3.2.4 Case outlines. Case outlines shall be in accordance with MIL-M-38510 and 1.2.3 herein.

3.3 Lead material and finish. Lead material and finish shall be in accordance with MIL-M-38510 and 6.4 herein.

3.4 Electrical performance characteristics. The electrical performance characteristics are as specified in table I, and apply over the full recommended case temperature range, unless otherwise specified.

3.5 Electrical test requirements. Electrical test requirements shall be as specified in table II and (where applicable), the altered item drawing for the applicable device type and device class. The subgroups of table III which constitute the minimum electrical test requirements for screening, qualification, and quality conformance, by device class, are specified in table II.

3.6 Marking. Marking shall be in accordance with MIL-M-38510. For programmed devices, the altered item drawing number shall be added to the marking by the programming activity.

3.7 Processing options. Since the device is capable of being programmed by either the manufacturer or the user to result in a wide variety of configurations, two processing options are provided for selection in the contract, using an altered item drawing.

3.7.1 Unprogrammed device delivered to the user. All testing shall be verified through group A testing as defined in 3.2.2.1, tables II and III. It is recommended that users perform subgroups 1, 2, and 3 along with 7 and 8 at required access speeds after programming to verify the specific program configuration.

3.7.2 Manufacturer-programmed device delivered to the user. All testing requirements and quality assurance provisions herein, including the requirements of the altered item drawing shall be satisfied by the manufacturer prior to delivery.

3.8 Microcircuit group assignment. The devices covered by this specification shall be in microcircuit group number 14 (see MIL-M-38510, appendix E).

4. QUALITY ASSURANCE PROVISIONS

4.1 Sampling and inspection. Sampling and inspection procedures shall be in accordance with MIL-M-38510 and methods 5005 and 5007 of MIL-STD-883, except as modified herein.

4.2 Screening. Screening shall be in accordance with method 5004 of MIL-STD-883, and shall be conducted on all devices prior to qualification, and quality conformance inspection. The following additional criteria shall apply:

a. Burn-in test (method 1015 of MIL STD 883). Test condition D or E using the circuit shown on figure 5, or equivalent.

b. Interim and final electrical tests shall be as specified in table II, except interim electrical tests prior to burn-in is optional at the discretion of the manufacturer.

c. The percent defective allowable (PDA) shall be as specified in MIL-M-38510.

d. All devices processed by the manufacturer to an altered item drawing shall be programmed prior to burn-in.

4.3 Qualification inspection. Qualification inspection shall be in accordance with MIL-M-38510. Inspections to be performed shall be those specified herein for groups A, B, C, and D inspections (see 4.4.1 through 4.4.4). Qualification data for subgroups 7, 8, 9, 10, and 11 shall be by attributes only.

4.3.1 Qualification extension. When authorized by the qualifying activity, for qualification inspection, if a manufacturer qualifies the PAL device with the worst case metal mask which is processed (e.g., same mask sets excluding metal mask) and manufactured on the same certified line to the other PAL device types on this specification, then the other PAL device types may be part I qualified by conducting only group A electrical tests and any electricals specified as additional group C subgroups and submitting data in accordance with MIL-M-38510, appendix D (i.e., groups B, C, and D tests are not required for qualification).

4.4 Quality conformance inspection. Quality conformance inspection shall be in accordance with MIL-M-38510. Inspections to be performed shall be those specified in method 5005 of MIL-STD-883 and herein for groups A, B, C, and D inspections (see 4.4.1 through 4.4.4).

4.4.1 Group A inspection. Group A inspection shall be in accordance with table I of method 5005 of MIL-STD-883 and as follows:

a. Tests shall be as specified in table II herein.

b. Subgroups 4, 5, and 6 of table I of method 5005 of MIL-STD-883 shall be omitted.

c. For unprogrammed devices, a sample shall be selected to satisfy programmability requirements prior to performing subgroups 9, 10, and 11. Twelve devices shall be submitted to programming (see 3.2.2.1). If more than 2 devices fail to program, the lot shall be rejected. At the manufacturer's option, the sample may be increased to 24 total devices with no more than 4 total device failures allowable.

d. For unprogrammed devices, 10 devices from the programmability sample shall be submitted to the requirements of the specified tests of subgroups 1, 2, and 3 designated for programmed devices only. If any device fails, the lot shall be rejected. At the manufacturer's option, the sample may be increased to 20 total devices with no more than two total device failures allowable.

e. For unprogrammed devices, 10 devices from the programmability sample shall be submitted to the requirements of group A, subgroups 9, 10, and 11. If more than two total devices fail the lot shall be rejected. At the manufacturer's option, the sample may be increased to 20 total devices with no more than four total device failures allowable.

4.4.2 Group B inspection. Group B inspection shall be in accordance with table II of method 5005 of MIL-STD-883.

a. Class S devices selected for testing in subgroup 5 (table IIa of method *5005 of MIL-STD-883) shall be programmed in accordance with 3.2.2.*

b. Electrical parameters shall be as specified in table II herein.

c. Steady-state life test for class S devices shall be in accordance with table IIa (subgroup 5) of method 5005 of MIL-STD-883 using a circuit submitted to the qualifying activity for approval. If the alternate burn-in conditions are used, the circuit on figure 5 or equivalent shall be used.

4.4.3 Group C inspection. Group C inspection shall be in accordance with table III of method 5005 of MIL-STD-883 and as follows:

a. End-point electrical tests shall be as specified in table II herein.

b. Steady-state life test (method 1005 of MIL-STD-883) conditions:

(1) Test condition D or E, using the circuit shown on figure 5, or equivalent.

(2) T_A = +125°C, minimum.

(3) Test duration: 1,000 hours except, as permitted by method 1005 of MIL-STD-883.

c. For qualification, at least 50 percent of the sample selected for testing in subgroup 1 shall be programmed (see 3.2.2). For quality conformance inspection, the programmability sample (see 4.4.1c) shall be included in the subgroup 1 tests of table III of method 5005 of MIL-STD-883.

4.4.4 Group D inspection. Group D inspection shall be in accordance with table IV of method 5005 of MIL-STD-883 and as follows:

End-point electrical tests shall be as specified in table II herein.

4.5 Methods of inspection. Methods of inspection shall be as specified in the appropriate tables and as follows:

4.5.1 Voltage and current. All voltages given are referenced to the microcircuit ground terminal. Currents given are conventional current and positive when flowing into the referenced terminal.

TABLE I. Electrical performance characteristics.

Parameter	Symbol	Test condition 1/ T_C = -55°C to +125°C	Device type	Limits Min	Limits Max	Unit
Low level input voltage	V_{IL}		All	---	0.8	V
High level input voltage	V_{IH}		All	2	---	V
Input clamp voltage	V_{IC}	V_{CC} = 4.5 V, I_I = -18 mA	All	---	-1.5	V
Low level input current	I_{IL}	V_{CC} = 5.5 V, V_I = 0.4 V	All	---	-0.25	mA
High level input current	I_{IH}	V_{CC} = 5.5 V, V_I = 2.4 V	All	---	25	µA
Maximum input current	I_I	V_{CC} = 5.5 V, V_I = 5.5 V	All	---	1.0	mA
Low level output voltage	V_{OL}	V_{CC} = 4.5 V, V_{IL} = 0.8 V V_{IH} = 2 V, I_{OL} = 8 mA	All	---	0.5	V
High level output voltage	V_{OH}	V_{CC} = 4.5 V, V_{IL} = 0.8 V V_{IH} = 2 V, I_{OH} = -2 mA	All	2.4	---	V
Output short-circuit current	I_{OS}	V_{CC} = 5 V, V_O = 0 V	All	-30	-130	mA
DC supply current	I_{CC}	V_{CC} = 5.5 V	01-18		90	mA
			19-27		45	
Propagation delay data data input to output	t_{PHL}	R_1 = 560Ω, R_2 = 1.1 kΩ See figure 6	01-09, 19-27		45	ns
			14		35	
			10-13, 15-18		30	
Propagation delay data data input to output	t_{PLH}	R_1 = 560Ω, R_2 = 1.1 kΩ See figure 6	01-09, 19-27		45	ns
			14		35	
			10-13, 15-18		30	

1/ See table III for exact pin conditions.

TABLE II. Electrical test requirements. 1/2/3/

MIL-STD-883 test requirements	Subgroups (per table III)	
	Class S devices	Class B devices
Interim electrical parameters (method 5004)	1	1
Final electrical test parameters (method 5004) for unprogrammed devices	1*, 2, 3, 7*, 8	1*, 2, 3, 7*, 8
Final electrical test parameters (method 5004) for programmed devices	1*, 2, 3, 7*, 8, 9, 10, 11	1*, 2, 3, 7*, 8, 9
Group A test requirements (method 5005)	1, 2, 3, 7, 8, 9, 10, 11	1, 2, 3, 7, 8, 9, 10, 11
Group B test requirements (method 5005)	1, 2, 3, 7, 8, 9, 10, 11	N/A
Group C end-point electrical parameters (method 5005)	N/A	1, 2, 3, 7, 8
Group D end-point electrical parameters (method 5005)	1, 2, 3, 7, 8	1, 2, 3, 7, 8

1/ * indicates PDA applies to subgroups 1 and 7 (see 4.2c).
2/ Any or all subgroups may be combined when using high-speed testers.
3/ Subgroups 7 and 8 shall consist of verifying the pattern specified.

SYMBOL	INCHES		MILLIMETERS		NOTES
	MIN	MAX	MIN	MAX	
A	.006	.090	0.15	2.29	
b	.015	.019	3.81	0.48	5
c	.003	.006	0.08	0.15	5
D	.37	.41	9.40	10.41	3
E	.37	.41	9.40	10.41	
E_1		.430		10.92	3
E_2	.130		3.30		
E_3	.03		0.76		11
e	.050 BSC		1.27 BSC		4, 6
k					10
L		.305		7.75	
Q	.010	.040	0.25	1.02	2
S_1	.005		0.13		7, 8
S_2	.005		0.13		10
X	30°	90°	30°	90°	10, 11

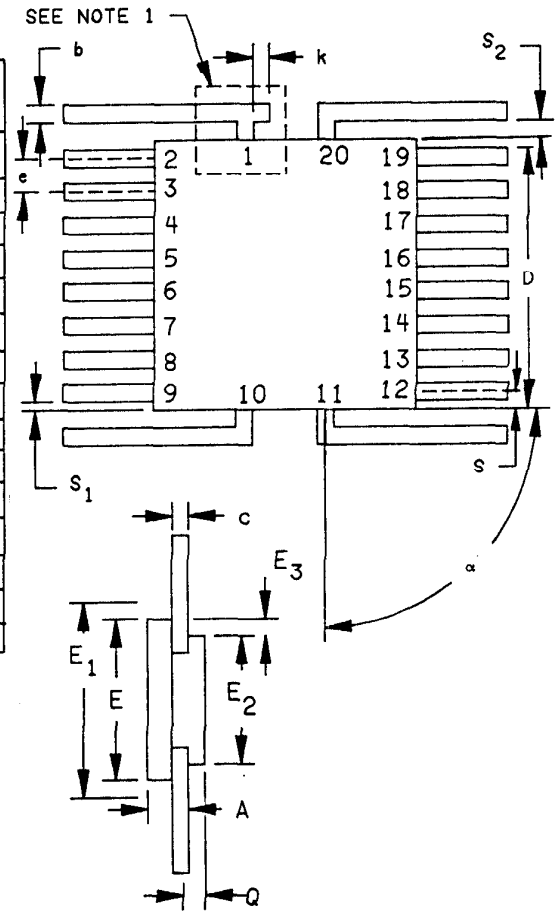

NOTES:

1. Index area; a notch or a pin one identification mark shall be located adjacent to pin one and shall be located within the shaded area shown. The manufacturer's identification shall not be used as a pin one identification mark. Alternatively, a tab (dimension k) may be used to identify pin one.
2. Dimension Q shall be measured at the point of exit of the lead from the body. Dimension Q shall be .0085 (0.216 mm) minimum when lead finish A is applied.
3. This dimension allows for off-center lid, meniscus and glass overrun.
4. The basic pin spacing is .050 (1.25 mm) between centerlines. Each pin centerline shall be located within ±.005 (0.13 mm) of its exact longitudinal position relative to pins 1 and 20.
5. All leads - increase maximum limit by .003 (0.08 mm) measured at the center of the flat, when lead finish A is applied.
6. Eighteen spaces.
7. Applies to all four corners (leads number 2, 9, 12, and 19).
8. Dimensions S_1 (see MIL-M-38510, appendix C) may be .000 (0.00 mm) if leads number 2, 9, 12, and 19 bend toward the cavity of the package within one leads width from the point of entry of the lead into the body. MIL-M-38510 shall apply for bottom or side brazed lead configurations.
9. Optional, see note 1. If a pin one identification mark is used in addition to this tab, the minimum limit of dimension k does not apply.
10. Applies to leads number 1, 10, 11, and 20.
11. Lead configuration is optional within dimension E except dimensions b and c apply (see MIL-M-38510, appendix C).

FIGURE 1. Case outline Y (20 lead, 3/8" x 3/8" flat package).

Device types 01, 06, 10, 15, 19, and 24

Cases R and Y

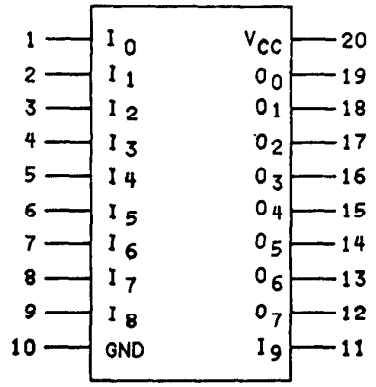

Device types 02, 07, 11, 16, 20, and 25

Cases R and Y

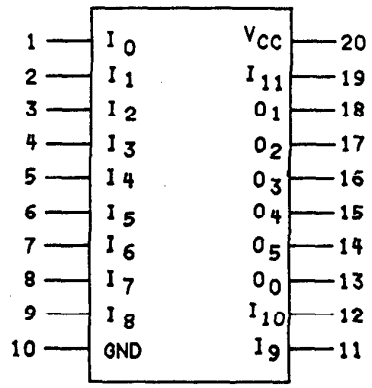

Device types 01, 06, 10, 15, 19, and 24

Case 2

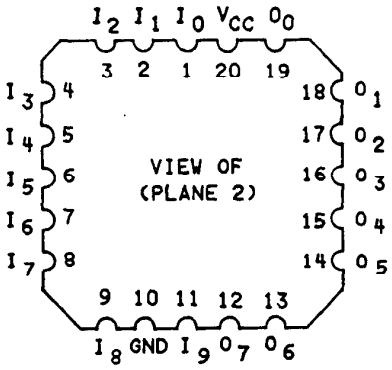

Option A with active terminals on plane 1.

Device types 02, 07, 11, 16, 20, and 25

Case 2

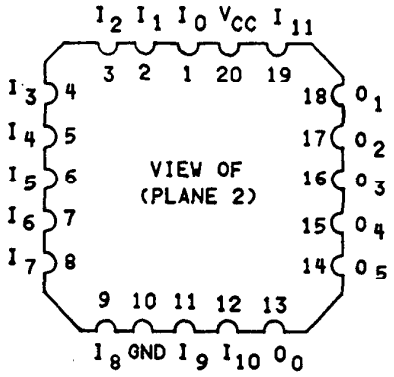

Option A with active terminals on plane 1.

FIGURE 2. Terminal connections.

Device types 03, 08, 12, 17, 21, and 26

Cases R and Y

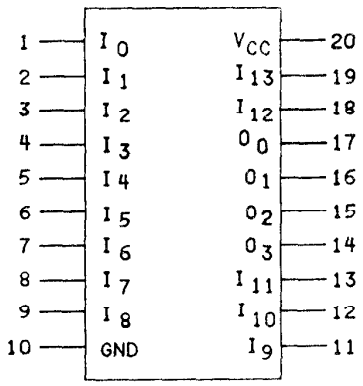

Device types 04, 05, 09, 13, 14, 18, 22, 23, and 27

Cases R and Y

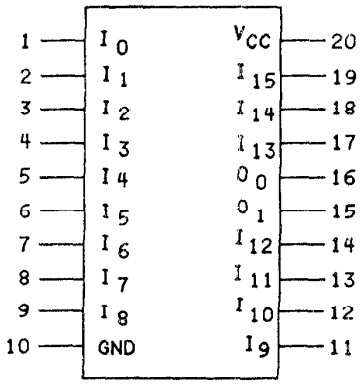

Device types 03, 08, 12, 17, 21, and 26

Case 2

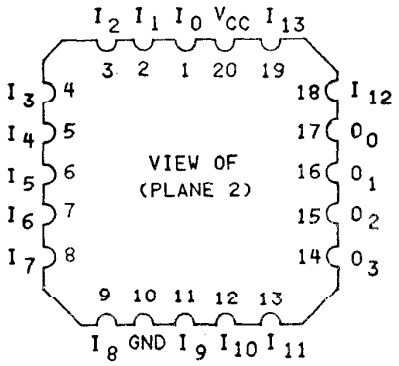

Option A with active terminals on plane 1.

Device types 04, 05, 09, 13, 14, 18, 22, 23, and 27

Case 2

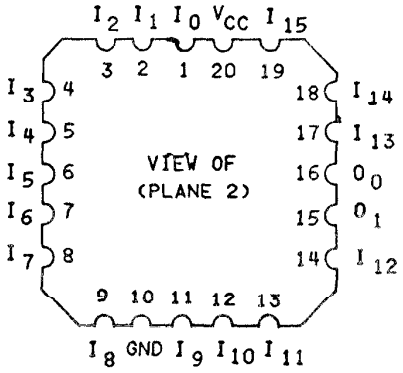

Option A with active terminals on plane 1.

FIGURE 2. Terminal connections - Continued.

Device types 01, 06, 10, 15, 19, and 24

Address										Output Level								Device types
I_9	I_8	I_7	I_6	I_5	I_4	I_3	I_2	I_1	I_0	O_7	O_6	O_5	O_4	O_3	O_2	O_1	O_0	
X	X	X	X	X	X	X	X	X	X	L	L	L	L	L	L	L	L	01, 10, 19
X	X	X	X	X	X	X	X	X	X	H	H	H	H	H	H	H	H	06, 15, 24

Device types 02, 07, 11, 16, 20, and 25

Address												Output Level						Device types
I_{11}	I_{10}	I_9	I_8	I_7	I_6	I_5	I_4	I_3	I_2	I_1	I_0	O_5	O_4	O_3	O_2	O_1	O_0	
X	X	X	X	X	X	X	X	X	X	X	X	L	L	L	L	L	L	02, 11, 20
X	X	X	X	X	X	X	X	X	X	X	X	H	H	H	H	H	H	07, 16, 25

Device types 03, 08, 12, 17, 21, and 26

Address														Output Level				Device types
I_{13}	I_{12}	I_{11}	I_{10}	I_9	I_8	I_7	I_6	I_5	I_4	I_3	I_2	I_1	I_0	O_3	O_2	O_1	O_0	
X	X	X	X	X	X	X	X	X	X	X	X	X	X	L	L	L	L	03, 12, 21
X	X	X	X	X	X	X	X	X	X	X	X	X	X	H	H	H	H	08, 17, 26

Device types 04, 05, 09, 13, 14, 18, 22, 23, and 27

Address																Output Level		Device types
I_{15}	I_{14}	I_{13}	I_{12}	I_{11}	I_{10}	I_9	I_8	I_7	I_6	I_5	I_4	I_3	I_2	I_1	I_0	O_1	O_0	
X	X	X	X	X	X	X	X	X	X	X	X	X	X	X	X	L	L	04, 13, 22
X	X	X	X	X	X	X	X	X	X	X	X	X	X	X	X	H	L	05, 14, 23
X	X	X	X	X	X	X	X	X	X	X	X	X	X	X	X	H	H	09, 18, 27

FIGURE 3. Truth table (unprogrammed).

Device types 01, 10, and 19

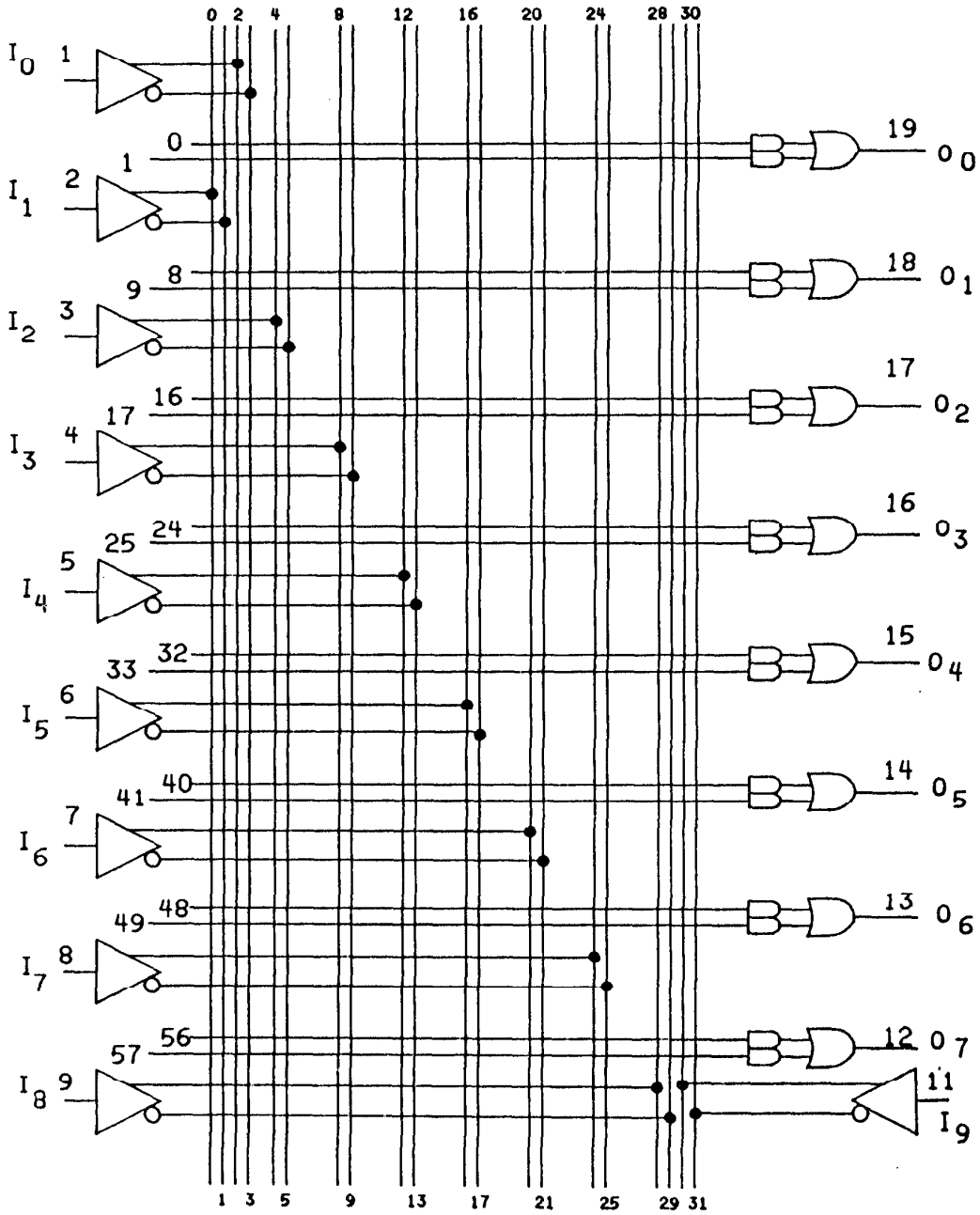

FIGURE 4. Unprogrammed logic diagram.

Device types 02, 11, and 20

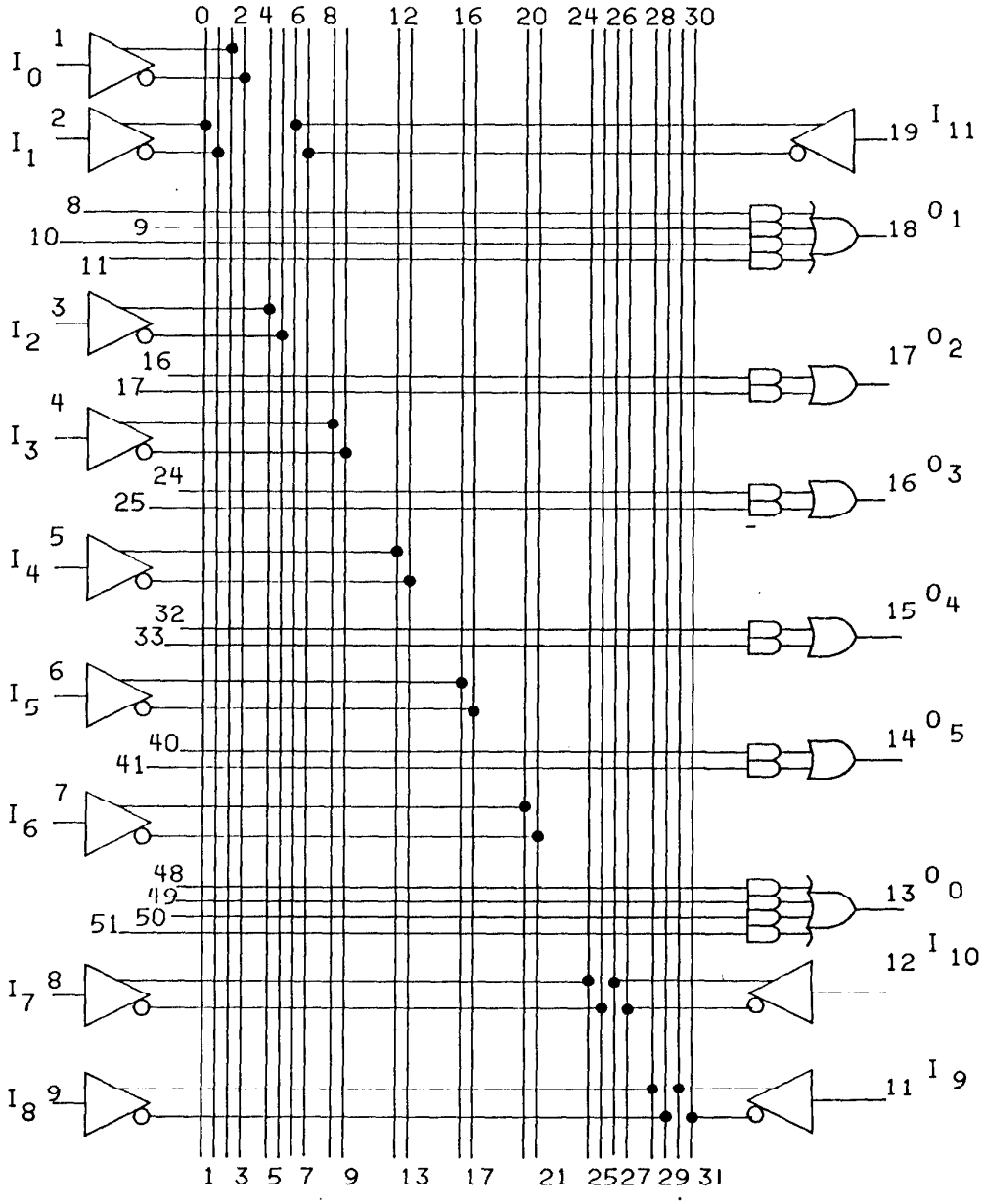

FIGURE 4. Unprogrammed logic diagram - Continued.

Device types 03, 12, and 21

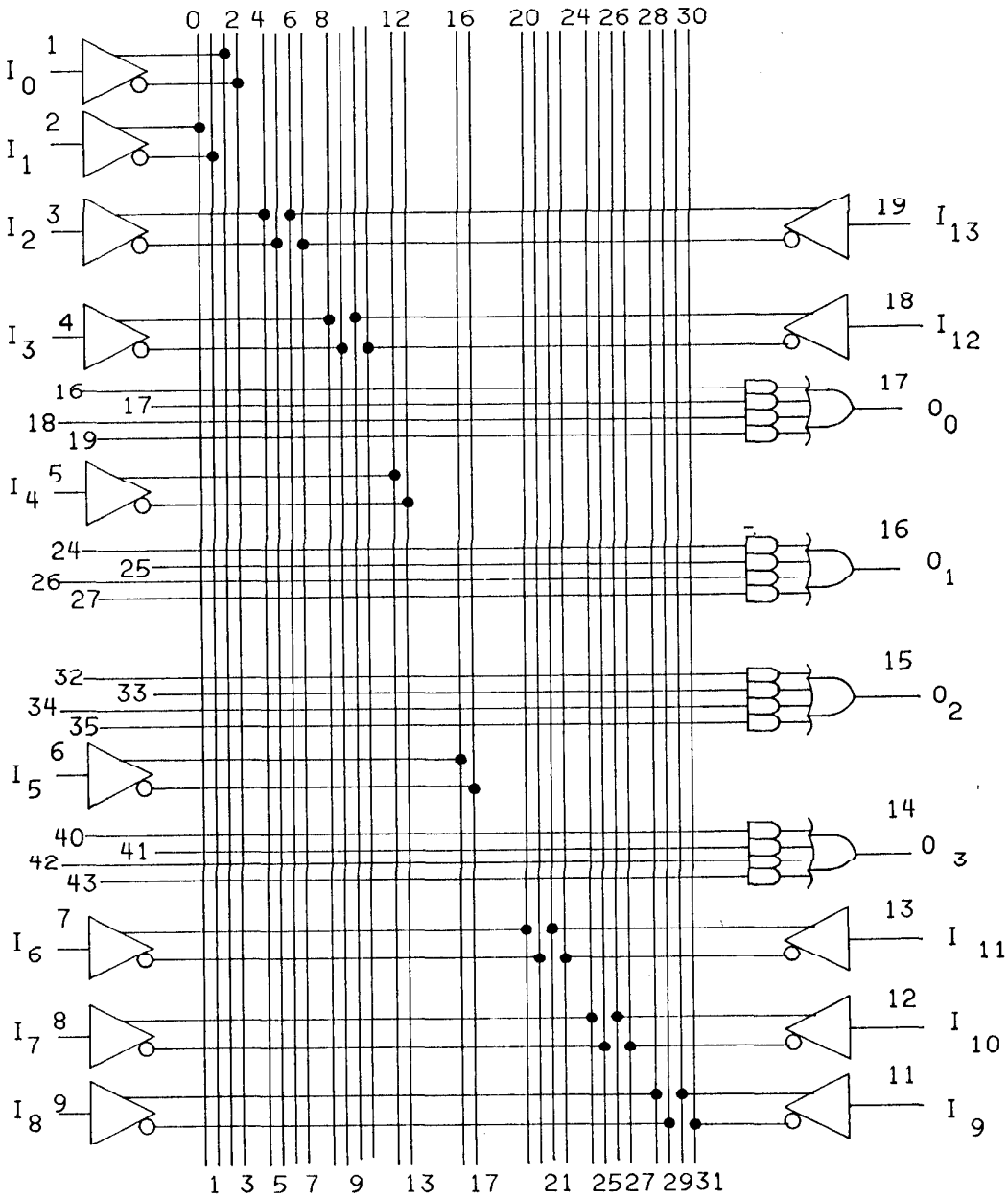

FIGURE 4. Unprogrammed logic diagram - Continued.

Device types 04, 13, and 22

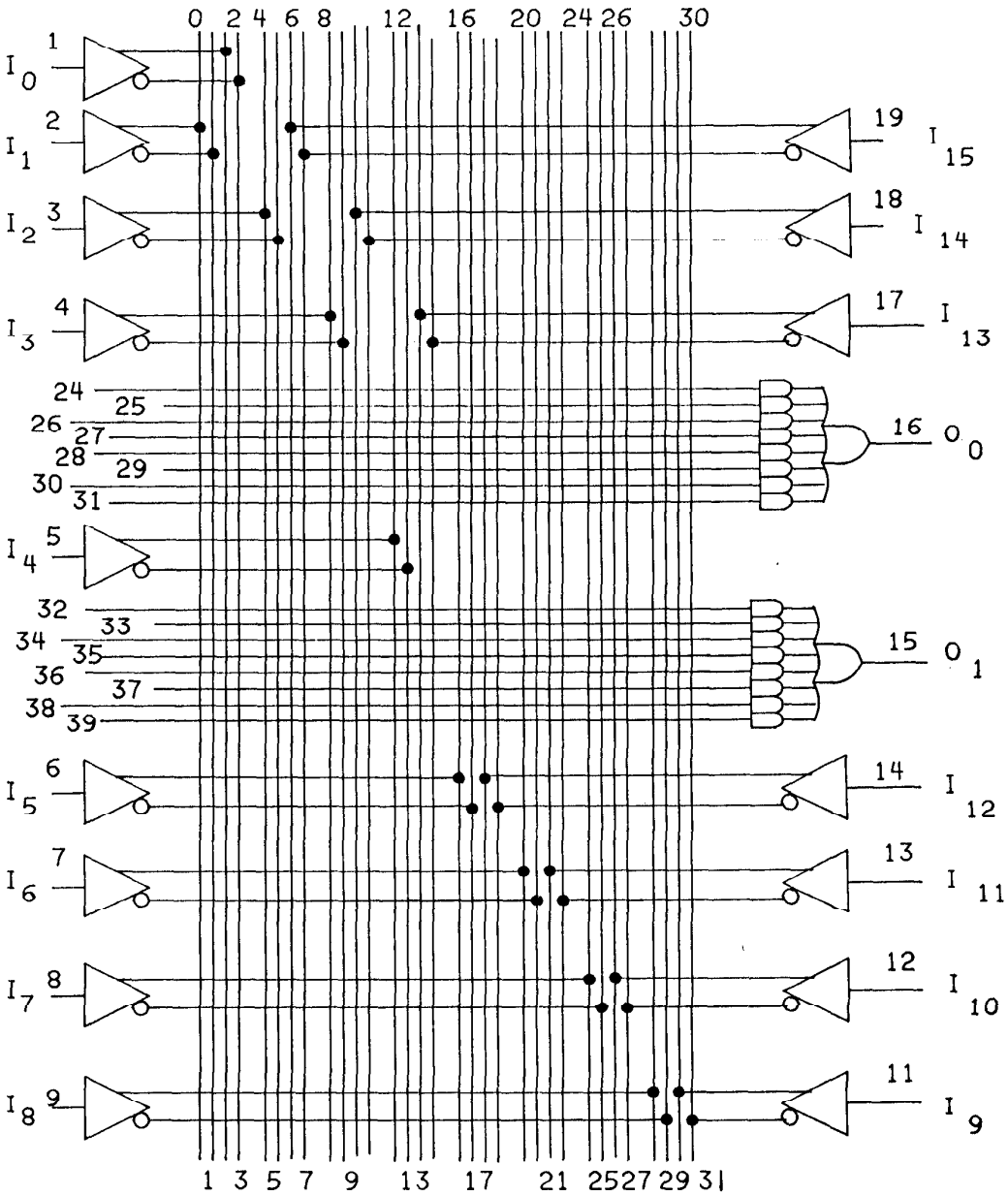

FIGURE 4. Unprogrammed logic diagram - Continued.

Device types 05, 14, and 23

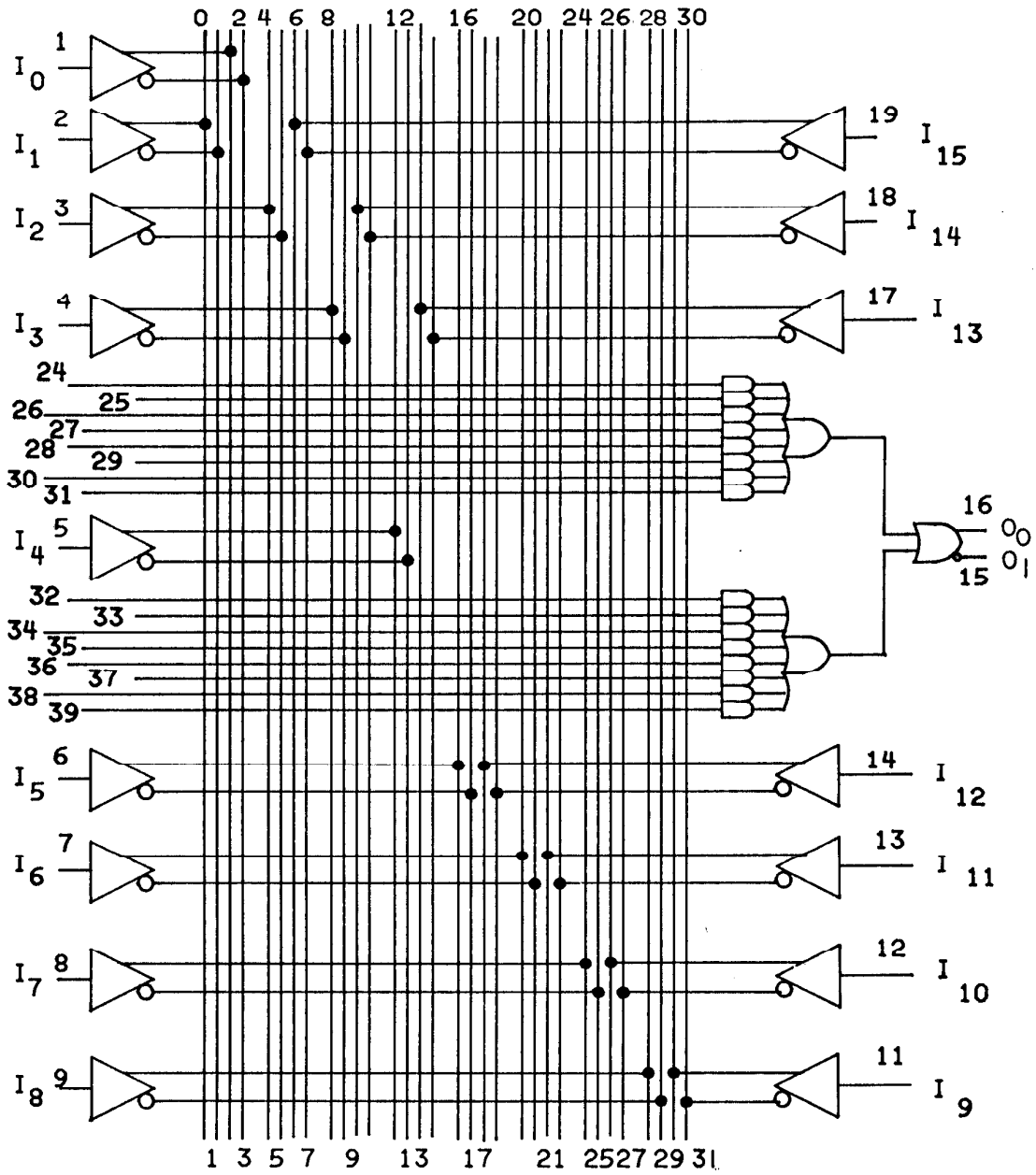

FIGURE 4. Unprogrammed logic diagram - Continued.

Device types 06, 15, and 24

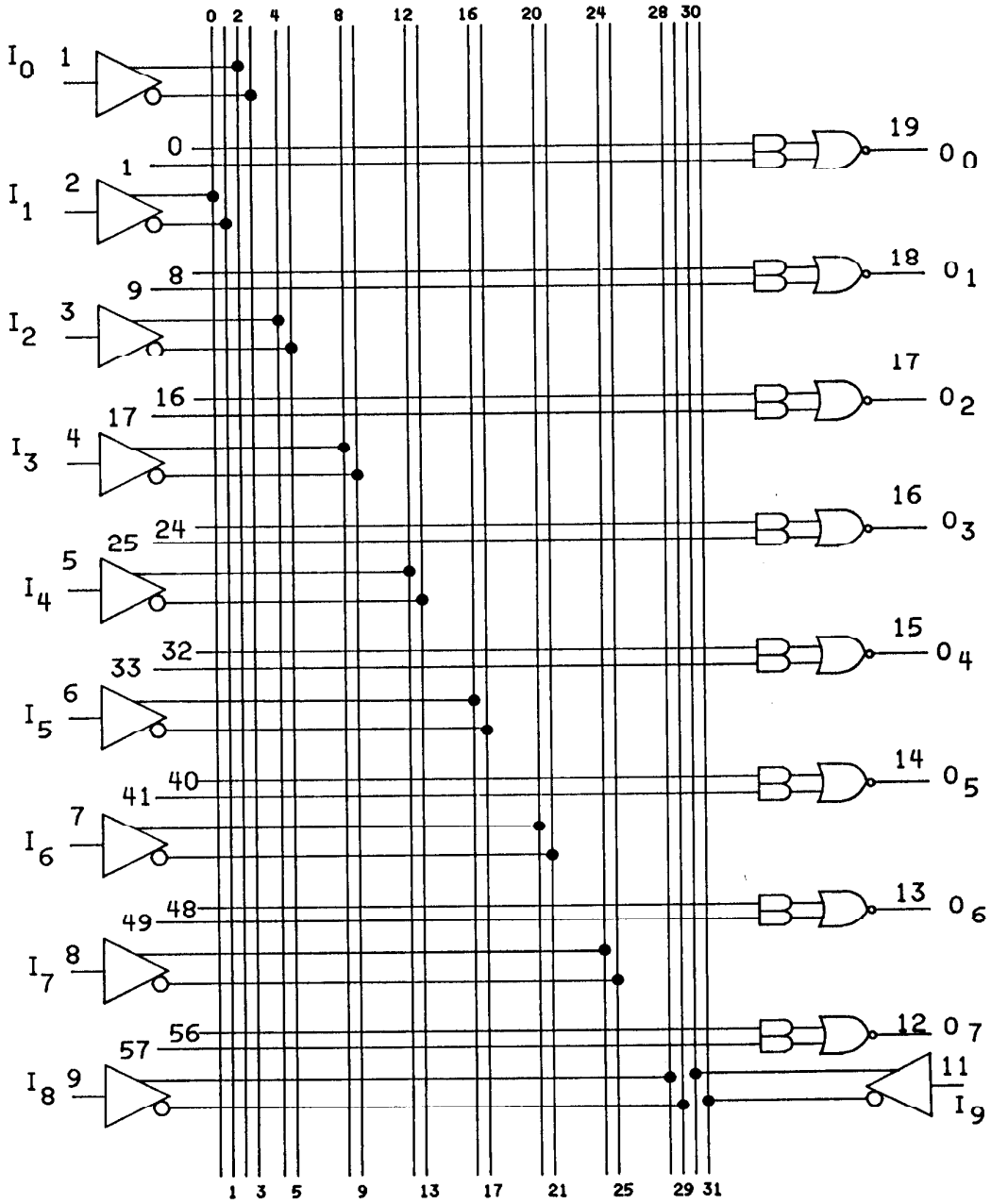

FIGURE 4. Unprogrammed logic diagram - Continued.

Device types 07, 16, and 25

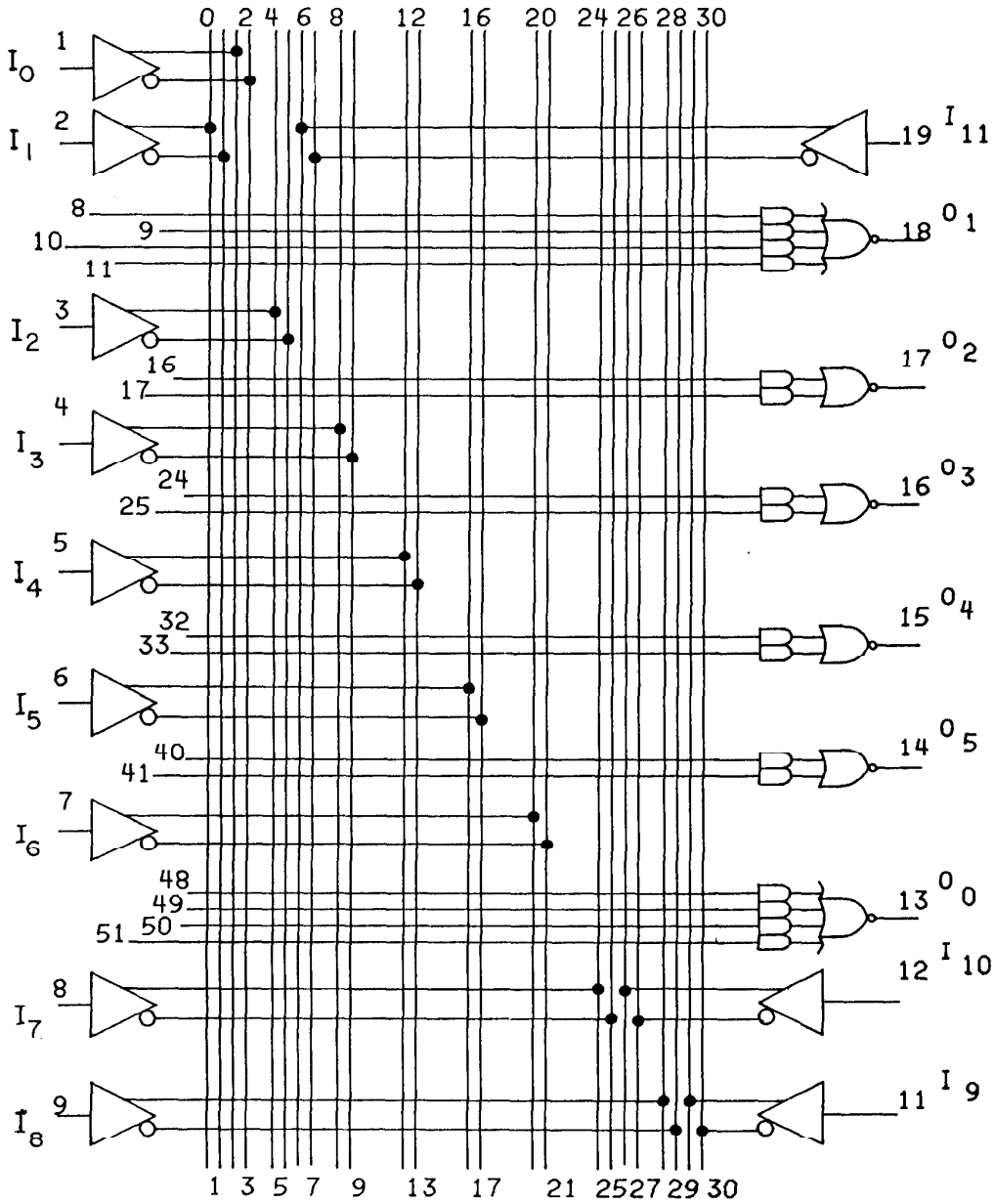

FIGURE 4. Unprogrammed logic diagram - Continued.

Device types 08, 17, and 26

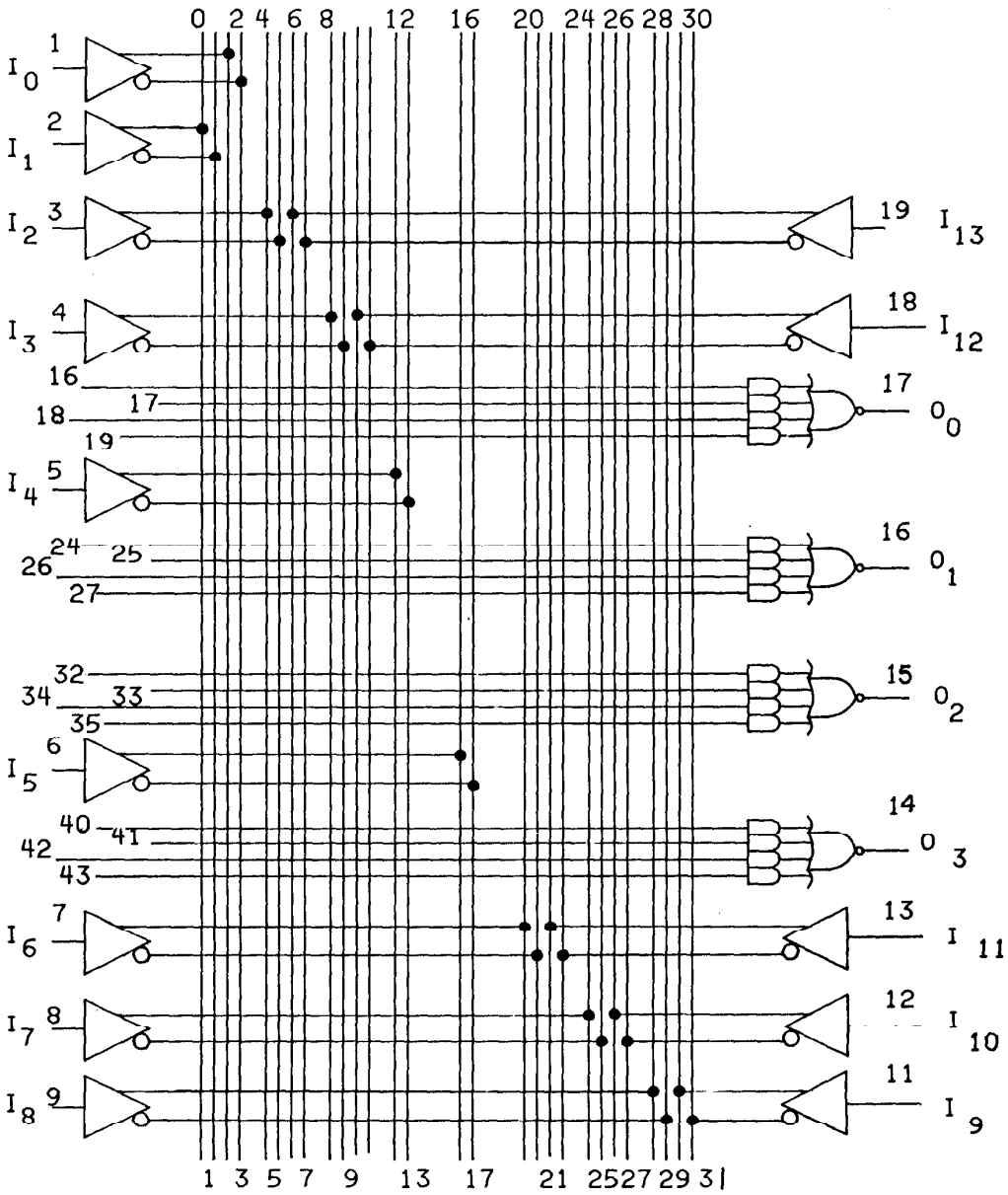

FIGURE 4. Unprogrammed logic diagram - Continued.

Device types 09, 18, and 27

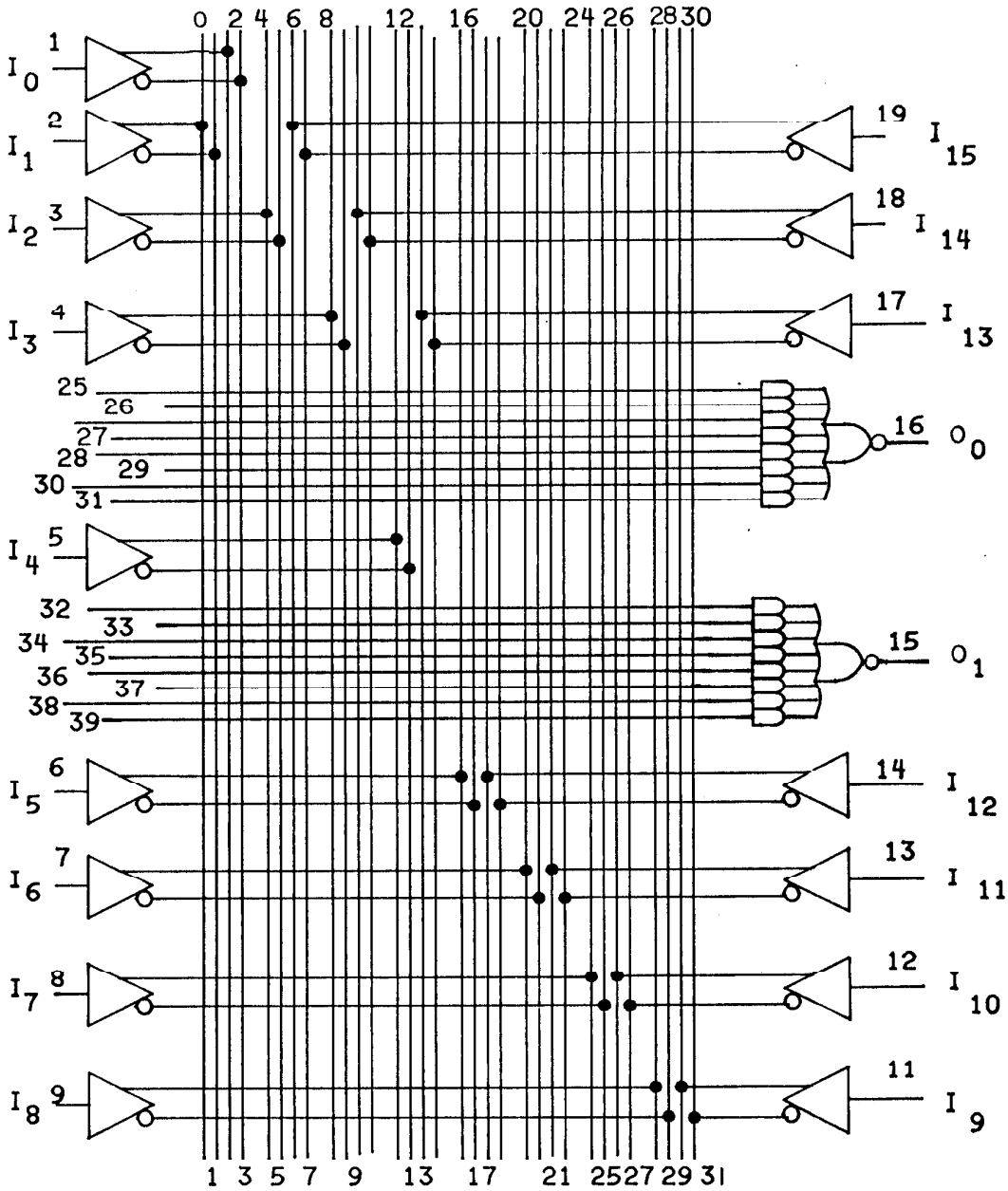

FIGURE 4. Unprogrammed logic diagram - Continued.

Device types 01, 06, 10, 15, 19, and 24

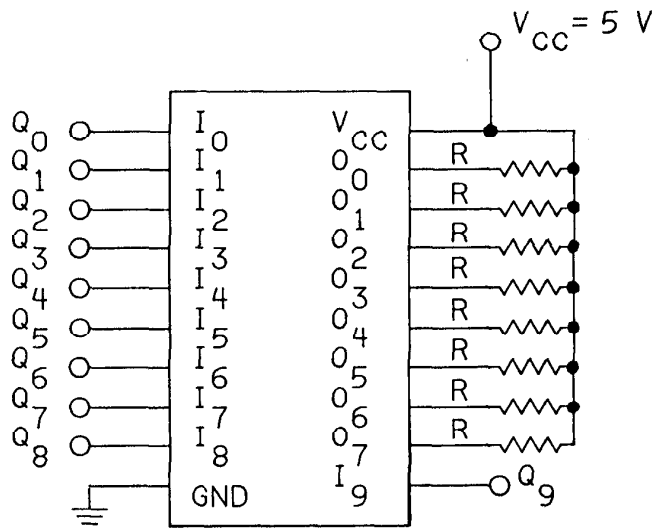

NOTES:
1. R = 560Ω ±5%. All outputs shall have separate identical loads.
2. All pulse generators have the following characteristics:
   V_{IL} - -1.5 V minimum to 0.8 maximum; V_{IH} - 2.0 V minimum to 5.5 V maximum;
   50% ± 15% duty cycle and frequencies as specified in note 4.
3. V_{CC} shall be high enough to insure 5.0 V minimum at the device V_{CC} terminal.
4. Input frequencies are as follows:

Input	Frequency (±50%)	Input	Frequency (±50%)
Q_0	f_0 = 100 kHz	Q_8	$f_8 = 1/256\ f_0$
Q_1	$f_1 = 1/2\ f_0$	Q_9	$f_9 = 1/512\ f_0$
Q_2	$f_2 = 1/4\ f_0$	Q_{10}	$f_{10} = 1/1024\ f_0$
Q_3	$f_3 = 1/8\ f_0$	Q_{11}	$f_{11} = 1/2048\ f_0$
Q_4	$f_4 = 1/16\ f_0$	Q_{12}	$f_{12} = 1/4096\ f_0$
Q_5	$f_5 = 1/32\ f_0$	Q_{13}	$f_{13} = 1/8192\ f_0$
Q_6	$f_6 = 1/64\ f_0$	Q_{14}	$f_{14} = 1/16384\ f_0$
Q_7	$f_7 = 1/128\ f_0$	Q_{15}	$f_{15} = 1/32768\ f_0$

FIGURE 5. Burn-in and life test circuit.

Device types 02, 07, 11, 16, 20, and 25

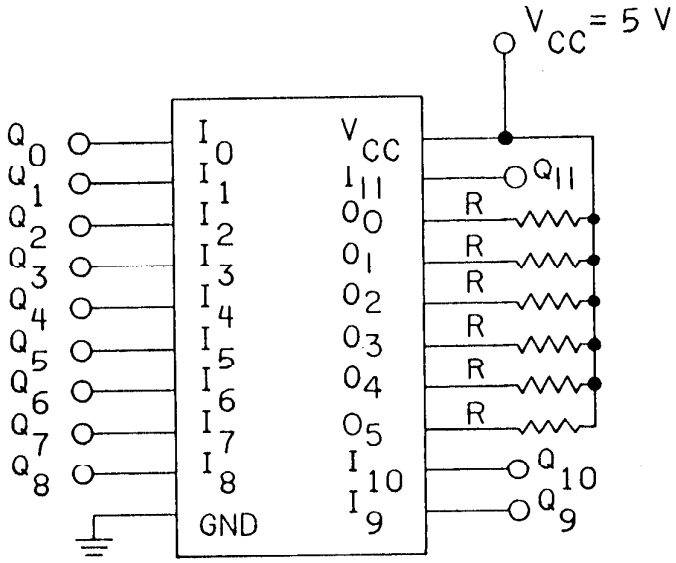

NOTES:
1. R = 560Ω ±5%. All outputs shall have separate identical loads.
2. All pulse generators have the following characteristics:
   V_{IL} = -1.5 V minimum to 0.8 V maximum; V_{IH} = 2.0 V minimum to 5.5 V maximum;
   50 ±15% duty cycle and frequencies as specified in note 4.
3. V_{CC} shall be high enough to insure 5.0 V minimum at the device V_{CC} terminal.
4. Input frequencies are as follows:

Input	Frequency (±50%)	Input	Frequency (±50%)
Q_0	f_0 = 100 kHz	Q_8	f_8 = 1/256 f_0
Q_1	f_1 = 1/2 f_0	Q_9	f_9 = 1/512 f_0
Q_2	f_2 = 1/4 f_0	Q_{10}	f_{10} = 1/1024 f_0
Q_3	f_3 = 1/8 f_0	Q_{11}	f_{11} = 1/2048 f_0
Q_4	f_4 = 1/16 f_0	Q_{12}	f_{12} = 1/4096 f_0
Q_5	f_5 = 1/32 f_0	Q_{13}	f_{13} = 1/8192 f_0
Q_6	f_6 = 1/64 f_0	Q_{14}	f_{14} = 1/16384 f_0
Q_7	f_7 = 1/128 f_0	Q_{15}	f_{15} = 1/32768 f_0

FIGURE 5. Burn-in and life test circuit - Continued.

Device types 03, 08, 12, 17, 21, and 26

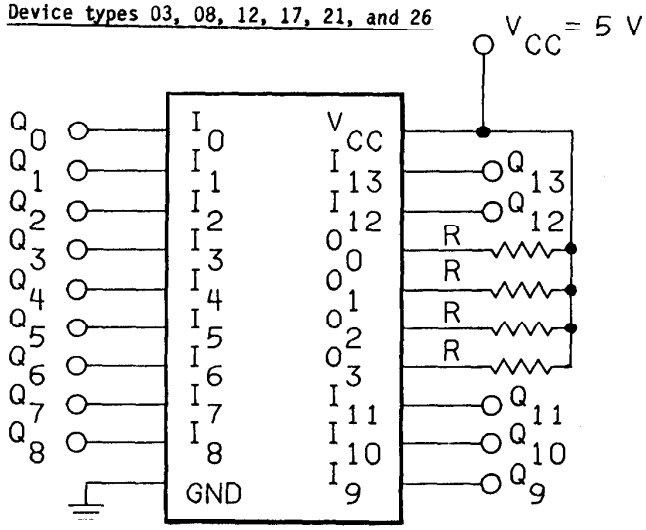

NOTES:
1. R = 560Ω ±5%. All outputs shall have separate identical loads.
2. All pulse generators have the following characteristics: V_{IL} = -1.5 V minimum to 0.8 maximum; V_{IH} = 2.0 V minimum to 5.5 V maximum; 50% ± 15% duty cycle and frequencies as specified in note 4.
3. V_{CC} shall be high enough to insure 5.0 V minimum at the device V_{CC} terminal.
4. Input frequencies are as follows:

Input	Frequency (±50%)	Input	Frequency (±50%)
Q_0	f_0 = 100 kHz	Q_8	f_8 = 1/256 f_0
Q_1	f_1 = 1/2 f_0	Q_9	f_9 = 1/512 f_0
Q_2	f_2 = 1/4 f_0	Q_{10}	f_{10} = 1/1024 f_0
Q_3	f_3 = 1/8 f_0	Q_{11}	f_{11} = 1/2048 f_0
Q_4	f_4 = 1/16 f_0	Q_{12}	f_{12} = 1/4096 f_0
Q_5	f_5 = 1/32 f_0	Q_{13}	f_{13} = 1/8192 f_0
Q_6	f_6 = 1/64 f_0	Q_{14}	f_{14} = 1/16384 f_0
Q_7	f_7 = 1/128 f_0	Q_{15}	f_{15} = 1/32768 f_0

FIGURE 5. Burn-in and life test circuit - Continued.

Device types 04, 05, 09, 13, 14, 18, 22, 23, and 27

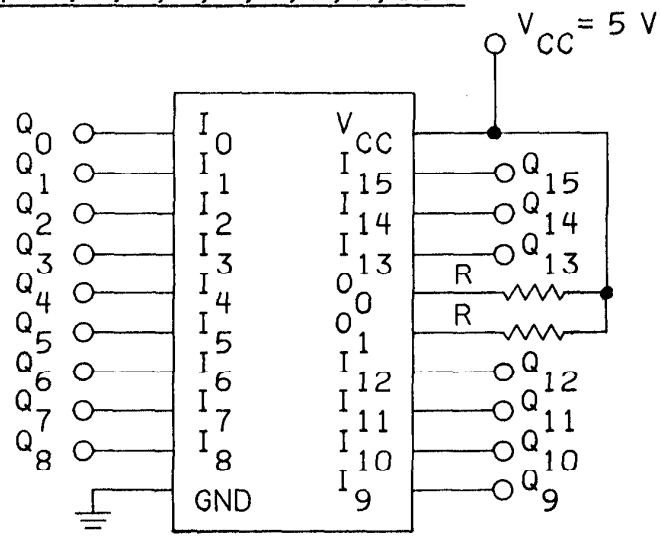

NOTES:
1. R = 560Ω ±5%. All outputs shall have separate identical loads.
2. All pulse generators have the following characteristics:
   V_{IL} = -1.5 V minimum to 0.8 maximum; V_{IH} = 2.0 V minimum to 5.5 V maximum
   50% ± 15% duty cycle and frequencies as specified in note 4.
3. V_{CC} shall be high enough to insure 5.0 V minimum at the device V_{CC} terminal.
4. Input frequencies are as follows:

Input	Frequency (±50%)	Input	Frequency (±50%)
Q_0	f_0 = 100 kHz	Q_8	$f_8 = 1/256\ f_0$
Q_1	$f_1 = 1/2\ f_0$	Q_9	$f_9 = 1/512\ f_0$
Q_2	$f_2 = 1/4\ f_0$	Q_{10}	$f_{10} = 1/1024\ f_0$
Q_3	$f_3 = 1/8\ f_0$	Q_{11}	$f_{11} = 1/2048\ f_0$
Q_4	$f_4 = 1/16\ f_0$	Q_{12}	$f_{12} = 1/4096\ f_0$
Q_5	$f_5 = 1/32\ f_0$	Q_{13}	$f_{13} = 1/8192\ f_0$
Q_6	$f_6 = 1/64\ f_0$	Q_{14}	$f_{14} = 1/16384\ f_0$
Q_7	$f_7 = 1/128\ f_0$	Q_{15}	$f_{15} = 1/32768\ f_0$

FIGURE 5. Burn-in and life test circuit - Continued.

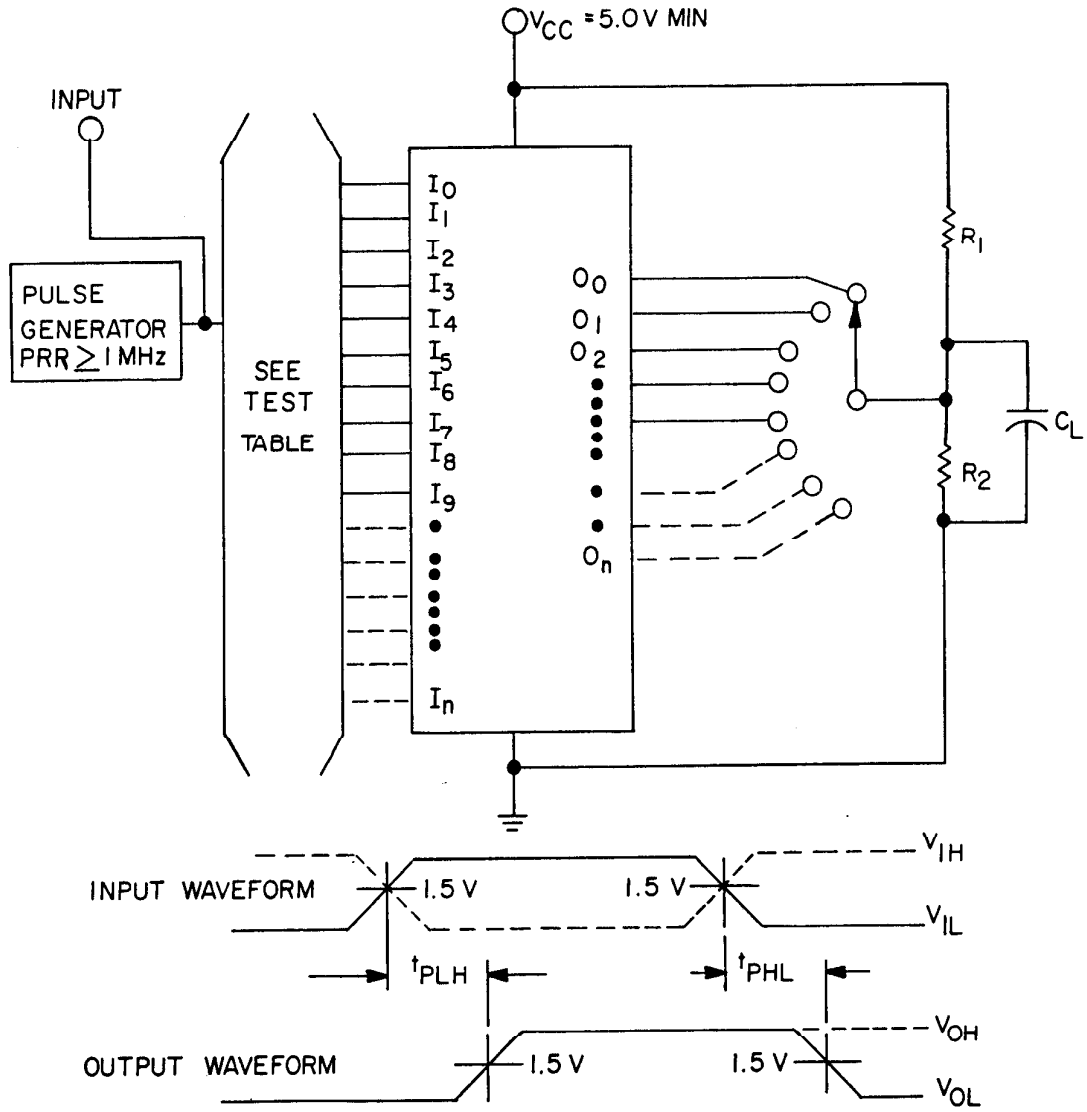

NOTES:
1. Test table for devices programmed in accordance with an altered item drawing may be replaced by the equivalent tests which apply to the specific program configuration for the resulting PAL.
2. C_L = 50 pF minimum, including jig and probe capacitance; R_1 = 560Ω ±20 percent; R_2 = 1.1 kΩ ±20 percent.
3. Outputs may be under load simultaneously.
4. V_{IL} = 0 V, V_{IH} = 3 V.

FIGURE 6. Switching time test circuit.

TABLE III. Group A inspection for device types 01, 06, 10, 15, 19, and 24.
Terminal conditions (pins not designated may be high ≥2.0 V, low ≤0.8 V, or open).

Subgroup	Symbol	MIL-STD-883 method	Test no.	1 I_0	2 I_1	3 I_2	4 I_3	5 I_4	6 I_5	7 I_6	8 I_7	9 I_8	10 GND	11 I_9	12 O_7	13 O_6	14 O_5	15 O_4	16 O_3	17 O_2	18 O_1	19 O_0	20 V_{CC}	Measured terminal	Test limits Min	Test limits Max	Unit
1 T_C = +25°C	I_{IC}		1	-18 mA									GND										4.5 V	I_0		-1.5	V
			2		-18 mA								"										"	I_1		"	"
			3			-18 mA							"										"	I_2		"	"
			4				-18 mA						"										"	I_3		"	"
			5					-18 mA					"										"	I_4		"	"
			6						-18 mA				"										"	I_5		"	"
			7							-18 mA			"										"	I_6		"	"
			8								-18 mA		"										"	I_7		"	"
			9									-18 mA	"										"	I_8		"	"
			10										"	-18 mA									"	I_9		"	"
	I_{OL}	3007	11	1/	1/	1/	1/	1/	1/	1/	1/	1/	"	1/								8 mA	"	O_0		0.5	"
			12	"	"	"	"	"	"	"	"	"	"	"							8 mA		"	O_1		"	"
			13	"	"	"	"	"	"	"	"	"	"	"						8 mA			"	O_2		"	"
			14	"	"	"	"	"	"	"	"	"	"	"					8 mA				"	O_3		"	"
			15	"	"	"	"	"	"	"	"	"	"	"				8 mA					"	O_4		"	"
			16	"	"	"	"	"	"	"	"	"	"	"			8 mA						"	O_5		"	"
			17	"	"	"	"	"	"	"	"	"	"	"		8 mA							"	O_6		"	"
			18	"	"	"	"	"	"	"	"	"	"	"	8 mA								"	O_7		"	"
	I_{IL}	3009	19	0.4 V									"										5.5 V	I_0		-0.25	mA
			20		0.4 V								"										"	I_1		"	"
			21			0.4 V							"										"	I_2		"	"
			22				0.4 V						"										"	I_3		"	"
			23					0.4 V					"										"	I_4		"	"
			24						0.4 V				"										"	I_5		"	"
			25							0.4 V			"										"	I_6		"	"
			26								0.4 V		"										"	I_7		"	"
			27									0.4 V	"										"	I_8		"	"
			28										"	0.4 V									"	I_9		"	"
	I_{IH}	3010	29	2.4 V									"										"	I_0		25	μA
			30		2.4 V								"										"	I_1		"	"
			31			2.4 V							"										"	I_2		"	"
			32				2.4 V						"										"	I_3		"	"
			33					2.4 V					"										"	I_4		"	"
			34						2.4 V				"										"	I_5		"	"
			35							2.4 V			"										"	I_6		"	"
			36								2.4 V		"										"	I_7		"	"
			37									2.4 V	"										"	I_8		"	"
			38										"	2.4 V									"	I_9		"	"
	I_{CC} 2/	3005	39																					V_{CC}		2/	mA
	I_{OS}	3011	40	1/	1/	1/	1/	1/	1/	1/	1/	1/	"	1/								0 V	5.0 V	O_0	-20	-130	"
			41	"	"	"	"	"	"	"	"	"	"	"							0 V		"	"	O_1	"	"	"
			42	"	"	"	"	"	"	"	"	"	"	"						0 V			"	"	O_2	"	"	"
			43	"	"	"	"	"	"	"	"	"	"	"					0 V				"	"	O_3	"	"	"
			44	"	"	"	"	"	"	"	"	"	"	"				0 V					"	"	O_4	"	"	"
			45	"	"	"	"	"	"	"	"	"	"	"			0 V						"	"	O_5	"	"	"
			46	"	"	"	"	"	"	"	"	"	"	"		0 V							"	"	O_6	"	"	"
			47	"	"	"	"	"	"	"	"	"	"	"	0 V								"	"	O_7	"	"	"
	I_{OH}	3006	48	"	"	"	"	"	"	"	"	"	"	"								-2 mA	4.5 V	O_0	2.4		V
			49	"	"	"	"	"	"	"	"	"	"	"							-2 mA		"	"	O_1	"		"
			50	"	"	"	"	"	"	"	"	"	"	"						-2 mA			"	"	O_2	"		"
			51	"	"	"	"	"	"	"	"	"	"	"					-2 mA				"	"	O_3	"		"
			52	"	"	"	"	"	"	"	"	"	"	"				-2 mA					"	"	O_4	"		"
			53	"	"	"	"	"	"	"	"	"	"	"			-2 mA						"	"	O_5	"		"
			54	"	"	"	"	"	"	"	"	"	"	"		-2 mA							"	"	O_6	"		"
			55	"	"	"	"	"	"	"	"	"	"	"	-2 mA								"	"	O_7	"		"
	I_I		56	5.5 V									"										5.5 V	I_0		1.0	mA
			57		5.5 V								"										"	I_1		"	"
			58			5.5 V							"										"	I_2		"	"
			59				5.5 V						"										"	I_3		"	"
			60					5.5 V					"										"	I_4		"	"
			61						5.5 V				"										"	I_5		"	"
			62							5.5 V			"										"	I_6		"	"
			63								5.5 V		"										"	I_7		"	"
			64									5.5 V	"										"	I_8		"	"
			65										"	5.5 V									"	I_9		"	"
2	Same tests, terminal conditions, and limits as for subgroup 1, except T_C = +125°C.																										
3	Same tests, terminal conditions, and limits as for subgroup 1, except T_C = -55°C.																										

See footnotes at end of table.

TABLE III. Group A inspection for device types 01, 06, 10, 15, 19, and 24 - Continued.
Terminal conditions (pins not designated may be high ≥2.0 V, low ≤0.8 V, or open).

Subgroup	Symbol	MIL-STD-883 method	Test no.	1	2	3	4	5	6	7	8	9	10	11	12	13	14	15	16	17	18	19	20	Measured terminal	Test limits Min	Test limits Max	Unit
				I_0	I_1	I_2	I_3	I_4	I_5	I_6	I_7	I_8	GND	I_9	O_7	O_6	O_5	O_4	O_3	O_2	O_1	O_0	V_{CC}				
7 T_C = +25°C	Functional tests	3014	66	3/	3/	3/	3/	3/	3/	3/	3/	3/	GND	3/	3/	3/	3/	3/	3/	3/	3/	3/	3/	(8) outputs		3/	
8	Same tests, terminal conditions and limits as in subgroup 7, except T_C = +125°C and -55°C.																										
9 T_C = +25°C 2/	t_{PHL}	3003 Figure 6	67	4/	4/	4/	4/	4/	4/	4/	4/	4/	GND	4/	5/	5/	5/	5/	5/	5/	5/	5/	4/	(8) outputs		2/	ns
	t_{PLH}		68	4/	4/	4/	4/	4/	4/	4/	4/	4/	GND	4/	5/	5/	5/	5/	5/	5/	5/	5/	4/			2/	ns
10	Same tests, terminal conditions, and limits as for subgroup 9, except T_C = +125°C.																										
11	Same tests, terminal conditions, and limits as for subgroup 9, except T_C = -55°C.																										

See footnotes at end of table.

TABLE III. Group A inspection for device types 02, 07, 11, 16, 20, and 25.
Terminal conditions (pins not designated may be high ≥2.0 V, low ≤0.8 V, or open).

Subgroup	Symbol	MIL-STD-883 method	Test no.	1	2	3	4	5	6	7	8	9	10	11	12	13	14	15	16	17	18	19	20	Measured terminal	Test limits Min	Test limits Max	Unit
				I_0	I_1	I_2	I_3	I_4	I_5	I_6	I_7	I_8	GND	I_9	I_{10}	O_0	O_5	O_4	O_3	O_2	O_1	I_{11}	V_{CC}				
T_C = +25°C [1]	V_{IC}		1	-18 mA									GND										4.5 V	I_0		-1.5	V
			2		-18 mA								"										"	I_1		"	"
			3			-18 mA							"										"	I_2		"	"
			4				-18 mA						"										"	I_3		"	"
			5					-18 mA					"										"	I_4		"	"
			6						-18 mA				"										"	I_5		"	"
			7							-18 mA			"										"	I_6		"	"
			8								-18 mA		"										"	I_7		"	"
			9									-18 mA	"										"	I_8		"	"
			10										"	-18 mA									"	I_9		"	"
			11										"		-18 mA								"	I_{10}		"	"
			12										"									-18 mA	"	I_{11}		"	"
	V_{OL}	3007	13	1/	1/	1/	1/	1/	1/	1/	1/	1/	"	1/	1/	8 mA								O_0		0.5	"
			14	"	"	"	"	"	"	"	"	"	"	"	"						8 mA	1/	"	O_1		"	"
			15	"	"	"	"	"	"	"	"	"	"	"	"					8 mA		"	"	O_2		"	"
			16	"	"	"	"	"	"	"	"	"	"	"	"				8 mA			"	"	O_3		"	"
			17	"	"	"	"	"	"	"	"	"	"	"	"			8 mA				"	"	O_4		"	"
			18	"	"	"	"	"	"	"	"	"	"	"	"		8 mA					"	"	O_5		"	"
	I_{IL}	3009	19	0.4 V									"										5.5 V	I_0		-0.25	mA
			20		0.4 V								"										"	I_1		"	"
			21			0.4 V							"										"	I_2		"	"
			22				0.4 V						"										"	I_3		"	"
			23					0.4 V					"										"	I_4		"	"
			24						0.4 V				"										"	I_5		"	"
			25							0.4 V			"										"	I_6		"	"
			26								0.4 V		"										"	I_7		"	"
			27									0.4 V	"										"	I_8		"	"
			28										"	0.4 V									"	I_9		"	"
			29										"		0.4 V								"	I_{10}		"	"
			30										"									0.4 V	"	I_{11}		"	"
	I_{IH}	3010	31	2.4 V									"										"	I_0		25	μA
			32		2.4 V								"										"	I_1		"	"
			33			2.4 V							"										"	I_2		"	"
			34				2.4 V						"										"	I_3		"	"
			35					2.4 V					"										"	I_4		"	"
			36						2.4 V				"										"	I_5		"	"
			37							2.4 V			"										"	I_6		"	"
			38								2.4 V		"										"	I_7		"	"
			39									2.4 V	"										"	I_8		"	"
			40										"	2.4 V									"	I_9		"	"
			41										"		2.4 V								"	I_{10}		"	"
			42										"									2.4 V	"	I_{11}		"	"
	I_{CC} 2/	3005	43										"										"	I_{CC}		2/	mA
	I_{OS}	3011	44	1/	1/	1/	1/	1/	1/	1/	1/	1/	"	1/	1/	0 V							5.0 V	O_0	-30	-130	"
			45	"	"	"	"	"	"	"	"	"	"	"	"						0 V	1/	"	O_1	"	"	"
			46	"	"	"	"	"	"	"	"	"	"	"	"					0 V		"	"	O_2	"	"	"
			47	"	"	"	"	"	"	"	"	"	"	"	"				0 V			"	"	O_3	"	"	"
			48	"	"	"	"	"	"	"	"	"	"	"	"			0 V				"	"	O_4	"	"	"
			49	"	"	"	"	"	"	"	"	"	"	"	"		0 V					"	"	O_5	"	"	"
	V_{OH}	3006	50	"	"	"	"	"	"	"	"	"	"	"	"	-2 mA							4.5 V	O_0	2.4		V
			51	"	"	"	"	"	"	"	"	"	"	"	"						-2 mA	1/	"	O_1	"		"
			52	"	"	"	"	"	"	"	"	"	"	"	"					-2 mA		"	"	O_2	"		"
			53	"	"	"	"	"	"	"	"	"	"	"	"				-2 mA			"	"	O_3	"		"
			54	"	"	"	"	"	"	"	"	"	"	"	"			-2 mA				"	"	O_4	"		"
			55	"	"	"	"	"	"	"	"	"	"	"	"		-2 mA					"	"	O_5	"		"
	I_I		56	5.5 V									"										5.5 V	I_0		1.0	mA
			57		5.5 V								"										"	I_1		"	"
			58			5.5 V							"										"	I_2		"	"
			59				5.5 V						"										"	I_3		"	"
			60					5.5 V					"										"	I_4		"	"
			61						5.5 V				"										"	I_5		"	"
			62							5.5 V			"										"	I_6		"	"
			63								5.5 V		"										"	I_7		"	"
			64									5.5 V	"										"	I_8		"	"
			65										"	5.5 V									"	I_9		"	"
			66										"		5.5 V								"	I_{10}		"	"
			67										"									5.5 V	"	I_{11}		"	"
2	Same tests, terminal conditions, and limits as for subgroup 1, except T_C = +125°C.																										

See footnotes at end of table.

TABLE III. Group A inspection for device types 02, 07, 11, 16, 20, and 25 - Continued.
Terminal conditions (pins not designated may be high ≥2.0 V, low ≤0.8 V, or open).

Subgroup	Symbol	MIL-STD-883 method	Test no.	1	2	3	4	5	6	7	8	9	10	11	12	13	14	15	16	17	18	19	20	Measured terminal	Test limits Min	Test limits Max	Unit
				I_0	I_1	I_2	I_3	I_4	I_5	I_6	I_7	I_8	GND	I_9	I_{10}	O_0	O_5	O_4	O_3	O_2	O_1	I_{11}	V_{CC}				
3	Same tests, terminal conditions, and limits as for subgroup 1, except T_C = -55°C.																										
7 T_C = +25°C	Functional tests	3014	68	3/	3/	3/	3/	3/	3/	3/	3/	3/	GND	3/	3/	3/	3/	3/	3/	3/	3/	3/	3/	(6) outputs		3/	
8	Same tests, terminal conditions and limits as in subgroup 7, except T_C = +125°C and -55°C.																										
9 T_C = +25°C 2/	t_{PHL}	3003 Figure 6	69	4/	4/	4/	4/	4/	4/	4/	4/	4/	GND	4/	4/	5/	5/	5/	5/	5/	5/	4/	4/	(6) outputs		2/	ns
	t_{PLH}		70	4/	4/	4/	4/	4/	4/	4/	4/	4/	GND	4/	4/	5/	5/	5/	5/	5/	5/	4/	4/			2/	ns
10	Same tests, terminal conditions, and limits as for subgroup 9, except T_C = +125°C.																										
11	Same tests, terminal conditions, and limits as for subgroup 9, except T_C = -55°C.																										

See footnotes at end of table.

TABLE III. Group A inspection for device types 03, 08, 12, 17, 21, and 26.
Terminal conditions (pins not designated may be high ≥2.0 V, low ≤0.8 V, or open).

Subgroup	Symbol	MIL-STD-883 method	Test no.	1	2	3	4	5	6	7	8	9	10	11	12	13	14	15	16	17	18	19	20	Measured terminal	Test limits Min	Test limits Max	Unit
				I_0	I_1	I_2	I_3	I_4	I_5	I_6	I_7	I_8	GND	I_9	I_{10}	I_{11}	O_3	O_2	O_1	O_0	I_{12}	I_{13}	V_{CC}				
1 T_C = +25°C	V_{IC}		1	-18 mA									GND										4.5 V	I_0		-1.5	V
			2		-18 mA								"										"	I_1		"	"
			3			-18 mA							"										"	I_2		"	"
			4				-18 mA						"										"	I_3		"	"
			5					-18 mA					"										"	I_4		"	"
			6						-18 mA				"										"	I_5		"	"
			7							-18 mA			"										"	I_6		"	"
			8								-18 mA		"										"	I_7		"	"
			9									-18 mA	"										"	I_8		"	"
			10										"	-18 mA									"	I_9		"	"
			11										"		-18 mA								"	I_{10}		"	"
			12										"			-18 mA							"	I_{11}		"	"
			13										"								-18 mA		"	I_{12}		"	"
			14										"									-18 mA	"	I_{13}		"	"
	V_{OL}	3007	15	1/	1/	1/	1/	1/	1/	1/	1/	1/	"	1/	1/	1/					1/	1/	"	O_0		0.5	"
			16	"	"	"	"	"	"	"	"	"	"	"	"	"			8 mA	8 mA	"	"	"	O_1		"	"
			17	"	"	"	"	"	"	"	"	"	"	"	"	"		8 mA			"	"	"	O_2		"	"
			18	"	"	"	"	"	"	"	"	"	"	"	"	"	8 mA				"	"	"	O_3		"	"
	I_{IL}	3009	19	0.4 V									"										5.5 V	I_0		-0.25	mA
			20		0.4 V								"										"	I_1		"	"
			21			0.4 V							"										"	I_2		"	"
			22				0.4 V						"										"	I_3		"	"
			23					0.4 V					"										"	I_4		"	"
			24						0.4 V				"										"	I_5		"	"
			25							0.4 V			"										"	I_6		"	"
			26								0.4 V		"										"	I_7		"	"
			27									0.4 V	"										"	I_8		"	"
			28										"	0.4 V									"	I_9		"	"
			29										"		0.4 V								"	I_{10}		"	"
			30										"			0.4 V							"	I_{11}		"	"
			31										"								0.4 V		"	I_{12}		"	"
			32										"									0.4 V	"	I_{13}		"	"
	I_{IH}	3010	33	2.4 V									"										"	I_0		25	μA
			34		2.4 V								"										"	I_1		"	"
			35			2.4 V							"										"	I_2		"	"
			36				2.4 V						"										"	I_3		"	"
			37					2.4 V					"										"	I_4		"	"
			38						2.4 V				"										"	I_5		"	"
			39							2.4 V			"										"	I_6		"	"
			40								2.4 V		"										"	I_7		"	"
			41									2.4 V	"										"	I_8		"	"
			42										"	2.4 V									"	I_9		"	"
			43										"		2.4 V								"	I_{10}		"	"
			44										"			2.4 V							"	I_{11}		"	"
			45										"								2.4 V		"	I_{12}		"	"
			46										"									2.4 V	"	I_{13}		"	"
	I_{CC} 2/	3005	47										"										"	V_{CC}		2/	mA
	I_{OS}	3011	48	1/	1/	1/	1/	1/	1/	1/	1/	1/	"	1/	1/	1/					1/	1/	5.0 V	O_0	-30	-130	"
			49	"	"	"	"	"	"	"	"	"	"	"	"	"			0 V	0 V	"	"	"	O_1	"	"	"
			50	"	"	"	"	"	"	"	"	"	"	"	"	"		0 V			"	"	"	O_2	"	"	"
			51	"	"	"	"	"	"	"	"	"	"	"	"	"	0 V				"	"	"	O_3	"	"	"
	V_{OH}	3006	52	"	"	"	"	"	"	"	"	"	"	"	"	"					"	"	4.5 V	O_0	2.4		V
			53	"	"	"	"	"	"	"	"	"	"	"	"	"			-2 mA	-2 mA	"	"	"	O_1	"		"
			54	"	"	"	"	"	"	"	"	"	"	"	"	"		-2 mA			"	"	"	O_2	"		"
			55	"	"	"	"	"	"	"	"	"	"	"	"	"	-2 mA				"	"	"	O_3	"		"
	I_I		56	5.5 V									"										5.5 V	I_0		1.0	mA
			57		5.5 V								"										"	I_1		"	"
			58			5.5 V							"										"	I_2		"	"
			59				5.5 V						"										"	I_3		"	"
			60					5.5 V					"										"	I_4		"	"
			61						5.5 V				"										"	I_5		"	"
			62							5.5 V			"										"	I_6		"	"
			63								5.5 V		"										"	I_7		"	"
			64									5.5 V	"										"	I_8		"	"
			65										"	5.5 V									"	I_9		"	"
			66										"		5.5 V								"	I_{10}		"	"
			67										"			5.5 V					5.5 V		"	I_{11}		"	"
			68										"									5.5 V	"	I_{12}		"	"
			69										"										"	I_{13}		"	"

See footnotes at end of table.

TABLE III. Group A inspection for device types 03, 08, 12, 17, 21, and 26 - Continued.
Terminal conditions (pins not designated may be high ≥2.0 V, low ≤0.8 V, or open).

Subgroup	Symbol	MIL-STD-883 method	Test no.	1	2	3	4	5	6	7	8	9	10	11	12	13	14	15	16	17	18	19	20	Measured terminal	Test limits Min	Test limits Max	Unit
				I_0	I_1	I_2	I_3	I_4	I_5	I_6	I_7	I_8	GND	I_9	I_{10}	I_{11}	O_3	O_2	O_1	O_0	I_{12}	I_{13}	V_{CC}				
2	Same tests, terminal conditions, and limits as for subgroup 1, except T_C = +125°C.																										
3	Same tests, terminal conditions, and limits as for subgroup 1, except T_C = -55°C.																										
7 T_C = +25°C	Functional tests	3014	70	3/	3/	3/	3/	3/	3/	3/	3/	3/	GND	3/	3/	3/	3/	3/	3/	3/	3/	3/	3/	(4) outputs	3/	3/	
8	Same tests, terminal conditions and limits as in subgroup 7, except T_C = +125°C and -55°C.																										
9 T_C = +25°C 2/	t_{PHL}	3003 Figure 6	71	4/	4/	4/	4/	4/	4/	4/	4/	4/	GND	4/	4/	4/	5/	5/	5/	5/	4/	4/	4/	(4) outputs		2/	ns
	t_{PLH}		72	4/	4/	4/	4/	4/	4/	4/	4/	4/	GND	4/	4/	4/	5/	5/	5/	5/	4/	4/	4/			2/	ns
10	Same tests, terminal conditions, and limits as for subgroup 9, except T_C = +125°C.																										
11	Same tests, terminal conditions, and limits as for subgroup 9, except T_C = -55°C.																										

See footnotes at end of table.

TABLE III. Group A inspection for device types 04, 05, 09, 13, 14, 18, 22, 23, and 27.
Terminal conditions (pins not designated may be high ≥2.0 V, low ≤0.8 V, or open).

Subgroup	Symbol	MIL-STD-883 method	Test no.	1	2	3	4	5	6	7	8	9	10	11	12	13	14	15	16	17	18	19	20	Measured terminal	Test limits Min	Test limits Max	Unit
				I_0	I_1	I_2	I_3	I_4	I_5	I_6	I_7	I_8	GND	I_9	I_{10}	I_{11}	I_{12}	O_1	O_0	I_{13}	I_{14}	I_{15}	V_{CC}				
1 T_C = +25°C	V_{IC}		1	-18 mA									GND										4.5 V	I_0		-1.5	V
			2		-18 mA								"										"	I_1		"	"
			3			-18 mA							"										"	I_2		"	"
			4				-18 mA						"										"	I_3		"	"
			5					-18 mA					"										"	I_4		"	"
			6						-18 mA				"										"	I_5		"	"
			7							-18 mA			"										"	I_6		"	"
			8								-18 mA		"										"	I_7		"	"
			9									-18 mA	"										"	I_8		"	"
			10										"	-18 mA									"	I_9		"	"
			11										"		-18 mA								"	I_{10}		"	"
			12										"			-18 mA							"	I_{11}		"	"
			13										"				-18 mA						"	I_{12}		"	"
			14										"							-18 mA			"	I_{13}		"	"
			15										"								-18 mA		"	I_{14}		"	"
			16										"									-18 mA	"	I_{15}		"	"
	V_{OL}	3007	17										"						8 mA	8 mA	1/	1/	1/	O_0		0.5	"
			18	1/	1/	1/	1/	1/	1/	1/	1/	1/	"	1/	1/	1/	1/	8 mA					5.5 V	O_1		0.5	
	I_{IL}	3009	19	0.4 V									"										"	I_0		-0.25	mA
			20		0.4 V								"										"	I_1		"	"
			21			0.4 V							"										"	I_2		"	"
			22				0.4 V						"										"	I_3		"	"
			23					0.4 V					"										"	I_4		"	"
			24						0.4 V				"										"	I_5		"	"
			25							0.4 V			"										"	I_6		"	"
			26								0.4 V		"										"	I_7		"	"
			27									0.4 V	"										"	I_8		"	"
			28										"	0.4 V									"	I_9		"	"
			29										"		0.4 V								"	I_{10}		"	"
			30										"			0.4 V							"	I_{11}		"	"
			31										"				0.4 V						"	I_{12}		"	"
			32										"					0.4 V					"	I_{13}		"	"
			33										"						0.4 V				"	I_{14}		"	"
			34										"							0.4 V			"	I_{15}		"	"
	I_{IH}	3010	35	2.4 V									"										"	I_0		25	μA
			36		2.4 V								"										"	I_1		"	"
			37			2.4 V							"										"	I_2		"	"
			38				2.4 V						"										"	I_3		"	"
			39					2.4 V					"										"	I_4		"	"
			40						2.4 V				"										"	I_5		"	"
			41							2.4 V			"										"	I_6		"	"
			42								2.4 V		"										"	I_7		"	"
			43									2.4 V	"										"	I_8		"	"
			44										"	2.4 V									"	I_9		"	"
			45										"		2.4 V								"	I_{10}		"	"
			46										"			2.4 V							"	I_{11}		"	"
			47										"				2.4 V						"	I_{12}		"	"
			48										"					2.4 V					"	I_{13}		"	"
			49										"						2.4 V				"	I_{14}		"	"
			50										"							2.4 V			"	I_{15}		"	"
	I_{CC}	3005	51										"										"	V_{CC}		2/	mA
	I_{OS}	3011	52	1/	1/	1/	1/	1/	1/	1/	1/	1/	"	1/	1/	1/	1/	0 V	0 V	1/	1/	1/	5.0 V	O_0	-30	-130	"
			53										"										5.0 V	O_1	-30	-130	
	V_{OH}	3006	54	"	"	"	"	"	"	"	"	"	"	"	"	"	"	-2 mA	-2 mA	"	"	"	4.5 V	O_0	2.4		V
			55										"										4.5 V	O_1	2.4		V
	I_I		56	5.5 V									"										5.5 V	I_0		1.0	mA
			57		5.5 V								"										"	I_1		"	"
			58			5.5 V							"										"	I_2		"	"
			59				5.5 V						"										"	I_3		"	"
			60					5.5 V					"										"	I_4		"	"
			61						5.5 V				"										"	I_5		"	"
			62							5.5 V			"										"	I_6		"	"
			63								5.5 V		"										"	I_7		"	"
			64									5.5 V	"										"	I_8		"	"
			65										"	5.5 V									"	I_9		"	"
			66										"		5.5 V								"	I_{10}		"	"
			67										"			5.5 V							"	I_{11}		"	"
			68										"				5.5 V						"	I_{12}		"	"
			69										"					5.5 V					"	I_{13}		"	"
			70										"						5.5 V				"	I_{14}		"	"
			71										"							5.5 V			"	I_{15}		"	"

See footnotes at end of table.

TABLE III. Group A inspection for device types 04, 05, 09, 13, 14, 18, 22, 23, and 27 - Continued.
Terminal conditions (pins not designated may be high ≥2.0 V, low ≤0.8 V, or open).

Subgroup	Symbol	MIL-STD-883 method	Test no.	1	2	3	4	5	6	7	8	9	10	11	12	13	14	15	16	17	18	19	20	Measured terminal	Test limits Min	Test limits Max	Unit
				I_0	I_1	I_2	I_3	I_4	I_5	I_6	I_7	I_8	GND	I_9	I_{10}	I_{11}	I_{12}	O_1	O_0	I_{13}	I_{14}	I_{15}	V_{CC}				
2	Same tests, terminal conditions, and limits as for subgroup 1, except T_C = +125°C.																										
3	Same tests, terminal conditions, and limits as for subgroup 1, except T_C = -55°C.																										
7 T_C = +25°C	Functional tests	3014	72	3/	3/	3/	3/	3/	3/	3/	3/	3/	GND	3/	3/	3/	3/	3/	3/	3/	3/	3/	3/	(2) outputs		3/	
8	Same tests, terminal conditions and limits as in subgroup 7, except T_C = +125°C and -55°C.																										
9 T_C = +25°C 5/	t_{PHL}	3003 Figure 6	73	4/	4/	4/	4/	4/	4/	4/	4/	4/	GND	4/	4/	4/	4/	5/	5/	4/	4/	4/	4/	(2) outputs		2/	ns
	t_{PLH}		74	4/	4/	4/	4/	4/	4/	4/	4/	4/	GND	4/	4/	4/	4/	5/	5/	4/	4/	4/	4/			2/	ns
10	Same tests, terminal conditions, and limits as for subgroup 9, except T_C = +125°C.																										
11	Same tests, terminal conditions, and limits as for subgroup 9, except T_C = -55°C.																										

1/ For programmed devices, select an appropriate set of inputs to acquire the desired output state.

For unprogrammed 01-04, 10-13, and 15-22 devices cannot check V_{OH}, I_{OS}. Any combination on inputs will give V_{OL} on outputs.

For unprogrammed 06-09, 15-18, and 24-27 devices cannot check V_{OL}. Any combination on inputs will give V_{OH}, I_{OS} on outputs.

For unprogrammed 05, 14, and 23 devices cannot check V_{OH}, I_{OS} on O_0 or V_{OL} on O_1. Any combination on inputs will give V_{OL} on O_0 and V_{OH}, I_{OS} on O_1.

2/ Specific device limits specified in table I.

3/ The functional tests shall verify that no fuses are blown for unprogrammed devices or that the altered item drawing pattern exists for programmed devices (see table II).

4/ (Programmed device) The test will check all inputs, gates, and outputs that have been programmed. Propagation test for t_{PHL} and t_{PLH} is also measured. This test shall be performed with V_{CC} = 4.5 V, and V_{CC} = 5.5 V.

5/ The outputs are loaded in accordance with figure 6.

4.6 Programming-verifying procedure for circuit A and circuit B. The programming specifications on figure 7A, figure 8, and table IV for circuit A, and figure 7B, figure 8, and table V for circuit B, and the following procedures shall be used for programming the device.

4.6.1 Pre-verification.

a. Raise V_{CC} to 5.0 volts.

b. Raise output disable pin, OD, to V_{IHH}.

c. Select an input line by specifying inputs and L/R as shown in table VI.

d. Select a product line by specifying A0, A1, and A2 one-of-eight select as shown in table VII.

e. Pulse the CLOCK pin and verify (with CLOCK at V_{IL}) that the output pins, O0 through O3, are in the state corresponding to an unblown fuse. Use the minimum timing conditions as specified on figure 7A for circuit A, and figure 7B for circuit B.

(1) For verified unblown condition, continue procedure from c. through e.

(2) For verified blown condition, stop procedure.

4.6.2 Programming algorithm.

a. Raise output disable pin, OD, to V_{IHH}.

b. Lower CLOCK pin to V_{IL}.

c. Select an input line as specified in 4.6.1c.

d. Select a product line as specified in 4.6.1d.

e. Raise V_{CC} to V_{IHH}.

f. Program the fuse by pulsing the output pins of the selected group, one at a time to V_{IHH} (see figure 7A for circuit A, and figure 7B for circuit B).

g. Lower V_{CC} to 5.0 volts.

h. Repeat this procedure from c. until pattern is complete.

4.6.3 First verification pass for all fuse locations.

a. Select input line as specified in 4.6.1c.

b. Select a product line as specified in 4.6.1d.

c. Pulse the CLOCK pin and verify (with CLOCK at V_{IL}) that the output pins, O0 through O3, are in the correct state.

(1) For verified output state, continue procedure.

(2) For overblown conditions, stop procedure.

(3) For underblown condition, reject part.

d. Repeat this procedure from a. until the entire array is exercised.

4.6.4 High voltage verify for all fuse locations.

a. Raise V_{CC} to 5.5 volts.

b. Repeat from 4.6.3a to 4.6.3c until the entire array is exercised.

Programming should be attempted at room temperature, +15°C to +30°C. To prevent further programming, security fuses may be blown. Raise V_{CC} to 6.0 volts, and raise pins 1 and 11 to V_P for 10 milliseconds to 1 second.

5. PACKAGING

5.1 Packaging requirements. The requirements for packaging shall be in accordance with MIL-M-38510.

6. NOTES

6.1 Intended use. Microcircuits conforming to this specification are intended for use for original equipment design application and logistic support of existing equipment.

6.2 Ordering data. Acquisition documents should specify the following:

a. Complete part number (see 1.2).

b. Requirements for delivery of one copy of the quality conformance inspection data pertinent to the device inspection lot to be supplied with each shipment by the device manufacturer, if applicable.

c. Requirement for certificate of compliance, if applicable.

d. Requirements for notification of change of product or process to contracting activity in addition to notification to the qualifying activity, if applicable.

e. Requirements for failure analysis (including required test condition of method 5003 of MIL-STD-883), corrective action and reporting of results, if applicable.

f. Requirements for product assurance options.

g. Requirements for special lead lengths or lead forming, if applicable. These requirements shall not affect the part number. Unless otherwise specified, these requirements will not apply to direct purchase by or direct shipment to the Government.

h. Requirements for programming the device, including processing option.

i. Requirements for "JAN" marking.

6.3 Abbreviations, symbols, and definitions. The abbreviations, symbols, and definitions used herein are defined in MIL-M-38510, MIL-STD-1331, and as follows:

GND - - - - - - - - - - - - - Ground zero voltage potential.

V_{IN} - - - - - - - - - - - - - Voltage level at an input terminal.

V_{IC} - - - - - - - - - - - - - Input clamp voltage.

I_{IN} - - - - - - - - - - - - - Current flowing into an input terminal.

L/R - - - - - - - - - - - - - Programming left/right identifier.

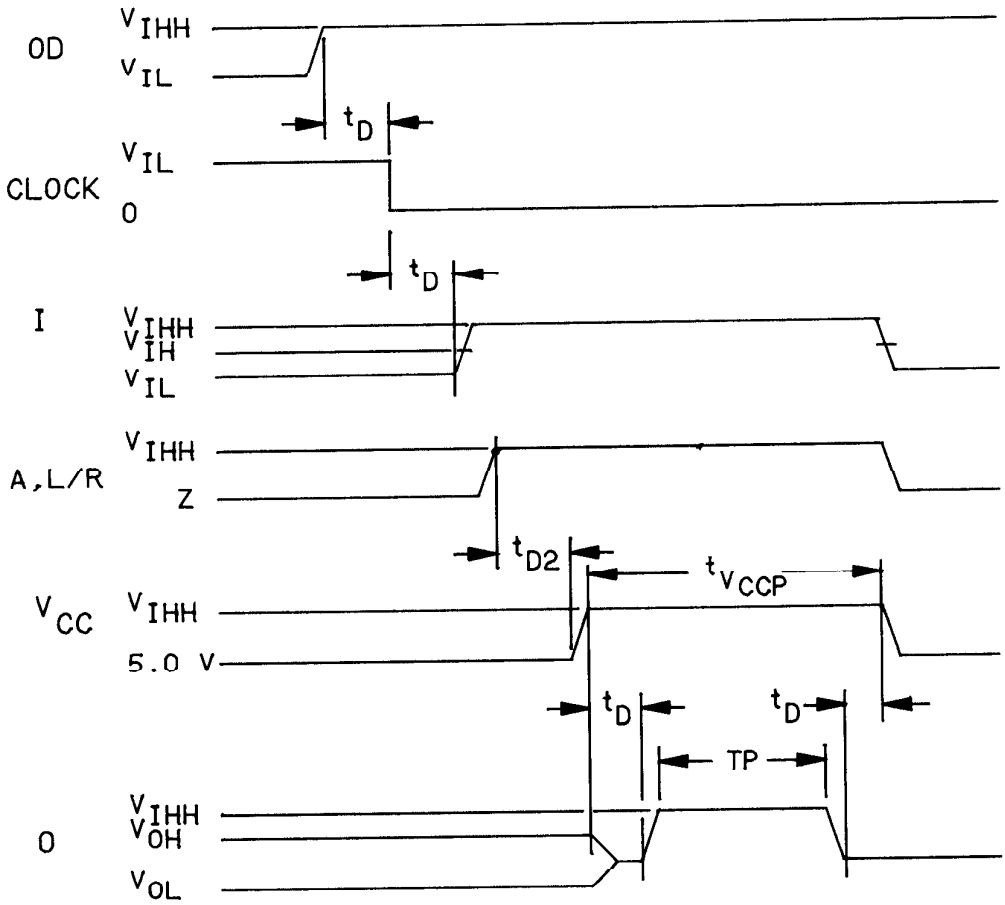

FIGURE 7A. Programming waveforms for circuit A.

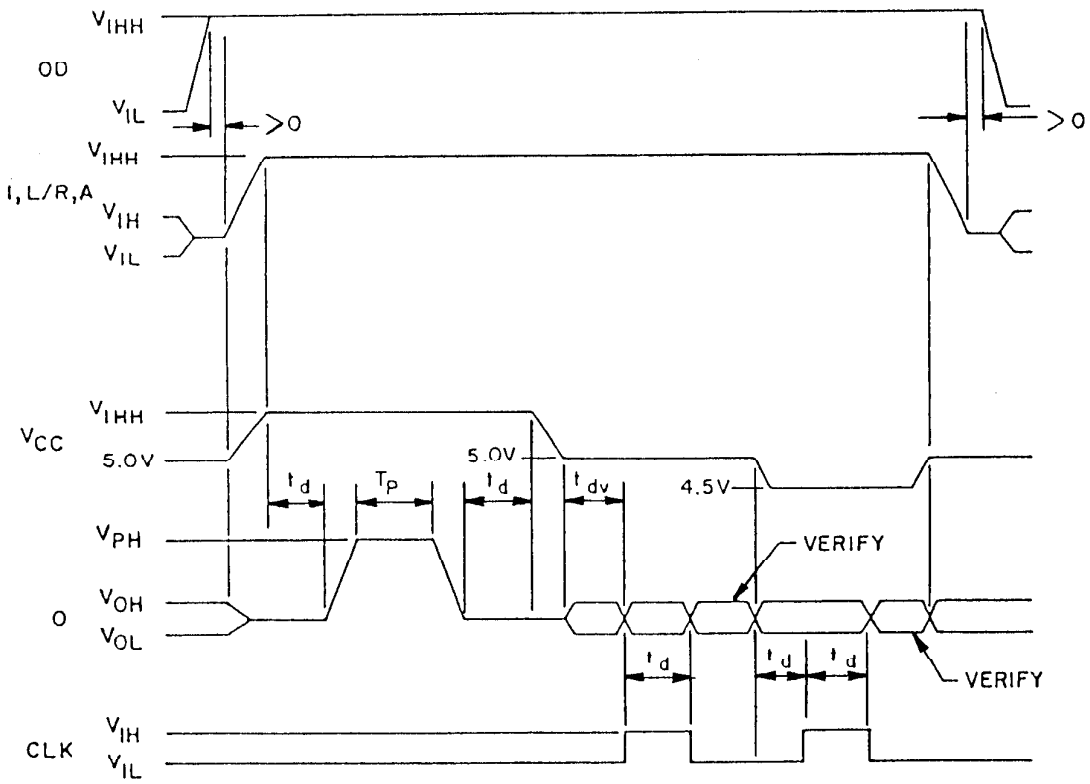

FIGURE 7B. Programming waveforms for circuit B.

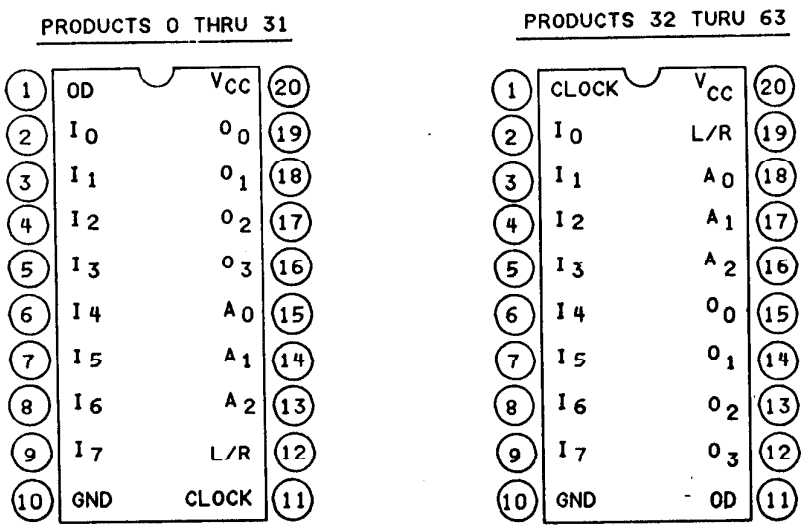

FIGURE 8. Programming pin identification for circuit A and circuit B.

TABLE IV. Programming characteristics for circuit A.

Symbol	Parameters		Limits Min	Limits Typ	Limits Max	Unit
V_{IHH}	Program-level input voltage		11.5	11.75	12.0	V
I_{IHH}	Program-level input current	Output program pulse	---	---	50	mA
		Output disable, OD	---	---	50	
		All other inputs	---	---	10	
I_{CCH}	Program supply current		---	---	400	mA
T_p	Program pulse width		10	20	50	µs
t_d	Delay time		100	---	---	ns
---	Program pulse duty cycle		---	---	20	%
V_p	Program verify, protect input voltage		18	18.5	19	V
I_p	Program verify, protect input current		---	---	400	mA
T_{pp}	Security fuse programming pulse width		10	40	70	µs
	Security fuse programming duty cycle		---	---	50	%
t_{RP}	Rise time of output programming and address pulses		1	1.5	10	V/µs
t_{RP}	Rise time of security fuse programming pulses		1	1.5	10	V/µs
V_{CCPP}	V_{CC} value during security fuse programming		5.75	6.0	6.25	V
	V_{CC} value for first verify		4.75	5.0	5.25	
	V_{CC} value for high V_{CC} verify		5.4	5.5	5.6	
	V_{CC} value for low V_{CC} verify		4.4	4.5	4.6	

TABLE V. Programming characteristics for circuit B.

Symbol	Parameter		Limits Min	Limits Typ	Limits Max	Units
V_{IHH}	Program-level input voltage		11.5	11.75	12.0	V
I_{HH}	Program-level input current	Output program pulse			50	mA
		OD, L/R			50	
		All other inputs			10	
I_{CCH}	Program supply current				900	mA
T_p	Program pulse width		10	20	50	µs
t_d	Delay time		100			ns
---	Program pulse duty cycle				20	%
V_p	Program verify protect-input voltage ($5.5\ V \leq V_{CC} \leq 6\ V$)			20		V
I_p	Program verify protect-input current				400	mA
t_{dv}	Delay time to verify		100			µs
V_{PH}	Programming pulse		11.5	11.75	12.0	V

TABLE VI. Input line select.

Input line number	Pin identification								
	I_7	I_6	I_5	I_4	I_3	I_2	I_1	I_0	L/R
0	HH	HH	HH	HH	HH	HH	HH	L	Z
1	HH	HH	HH	HH	HH	HH	HH	H	Z
2	HH	HH	HH	HH	HH	HH	HH	L	HH
3	HH	HH	HH	HH	HH	HH	HH	H	HH
4	HH	HH	HH	HH	HH	HH	L	HH	Z
5	HH	HH	HH	HH	HH	HH	H	HH	Z
6	HH	HH	HH	HH	HH	HH	L	HH	HH
7	HH	HH	HH	HH	HH	HH	H	HH	HH
8	HH	HH	HH	HH	HH	L	HH	HH	Z
9	HH	HH	HH	HH	HH	H	HH	HH	Z
10	HH	HH	HH	HH	HH	L	HH	HH	HH
11	HH	HH	HH	HH	HH	H	HH	HH	HH
12	HH	HH	HH	HH	L	HH	HH	HH	Z
13	HH	HH	HH	HH	H	HH	HH	HH	Z
14	HH	HH	HH	HH	L	HH	HH	HH	HH
15	HH	HH	HH	HH	H	HH	HH	HH	HH
16	HH	HH	HH	L	HH	HH	HH	HH	Z
17	HH	HH	HH	H	HH	HH	HH	HH	Z
18	HH	HH	HH	L	HH	HH	HH	HH	HH
19	HH	HH	HH	H	HH	HH	HH	HH	HH
20	HH	HH	L	HH	HH	HH	HH	HH	Z
21	HH	HH	H	HH	HH	HH	HH	HH	Z
22	HH	HH	L	HH	HH	HH	HH	HH	HH
23	HH	HH	H	HH	HH	HH	HH	HH	HH
24	HH	L	HH	HH	HH	HH	HH	HH	Z
25	HH	H	HH	HH	HH	HH	HH	HH	Z
26	HH	L	HH	HH	HH	HH	HH	HH	HH
27	HH	H	HH	HH	HH	HH	HH	HH	HH
28	L	HH	HH	HH	HH	HH	HH	HH	Z
29	H	HH	HH	HH	HH	HH	HH	HH	Z
30	L	HH	HH	HH	HH	HH	HH	HH	HH
31	H	HH	HH	HH	HH	HH	HH	HH	HH

L = Low level input voltage, V_{IL}.

H = High level input voltage, V_{IH}.

HH = High level program voltage, V_{IHH}.

Z = High impedance (e.g., 10 kΩ to 5.0 V).

TABLE VII. Product line select.

Product line number	Pin identification						
	O_3	O_2	O_1	O_0	A_2	A_1	A_0
0, 32	Z	Z	Z	HH	Z	Z	Z
1, 33	Z	Z	Z	HH	Z	Z	HH
2, 34	Z	Z	Z	HH	Z	HH	Z
3, 35	Z	Z	Z	HH	Z	HH	HH
4, 36	Z	Z	Z	HH	HH	Z	Z
5, 37	Z	Z	Z	HH	HH	Z	HH
6, 38	Z	Z	Z	HH	HH	HH	Z
7, 39	Z	Z	Z	HH	HH	HH	HH
8, 40	Z	Z	HH	Z	Z	Z	Z
9, 41	Z	Z	HH	Z	Z	Z	HH
10, 42	Z	Z	HH	Z	Z	HH	Z
11, 43	Z	Z	HH	Z	Z	HH	HH
12, 44	Z	Z	HH	Z	HH	Z	Z
13, 45	Z	Z	HH	Z	HH	Z	HH
14, 46	Z	Z	HH	Z	HH	HH	Z
15, 47	Z	Z	HH	Z	HH	HH	HH
16, 48	Z	HH	Z	Z	Z	Z	Z
17, 49	Z	HH	Z	Z	Z	Z	HH
18, 50	Z	HH	Z	Z	Z	HH	Z
19, 51	Z	HH	Z	Z	Z	HH	HH
20, 52	Z	HH	Z	Z	HH	Z	Z
21, 53	Z	HH	Z	Z	HH	Z	HH
22, 54	Z	HH	Z	Z	HH	HH	Z
23, 55	Z	HH	Z	Z	HH	HH	HH
24, 56	HH	Z	Z	Z	Z	Z	Z
25, 57	HH	Z	Z	Z	Z	Z	HH
26, 58	HH	Z	Z	Z	Z	HH	Z
27, 59	HH	Z	Z	Z	Z	HH	HH
28, 60	HH	Z	Z	Z	HH	Z	Z
29, 61	HH	Z	Z	Z	HH	Z	HH
30, 62	HH	Z	Z	Z	HH	HH	Z
31, 63	HH	Z	Z	Z	HH	HH	HH

L = Low level input voltage, V_{IL}.

H = High level input voltage, V_{IH}.

HH = High level program voltage, V_{IHH}.

Z = High impedance (e.g., 10 kΩ to 5.0 V).

6.4 Logistic support. Lead materials and finishes (see 3.3) are interchangeable. Unless otherwise specified, microcircuits acquired for Government logistic support will be acquired to device class B (see 1.2.2), and lead material and finish C (see 3.3). Longer length leads and lead forming shall not affect the part number. It is intended that spare devices for logistic support be acquired in the unprogrammed condition (see 3.7.1) and programmed by the maintenance activity, except where use of quantities for devices with a specific program or pattern justify stocking of preprogrammed devices.

6.5 Substitutability. The cross-reference information below is presented for the convenience of users. Microcircuits covered by this specification will functionally replace the listed generic-industry type. Generic-industry microcircuit types may not have equivalent operational performance characteristics across military temperature ranges or reliability factors equivalent to MIL-M-35810 device types and may have slight physical variations in relation to case size. The presence of this information shall not be deemed as permitting substitution of generic-industry types for MIL-M-38510 types or as a waiver of any of the provisions of MIL-M-38510.

Military device type	Generic-industry type/manufacturer	Circuit designator	Fusible link	Symbol CAGE number
01	PAL10H8/Monolithic Memories	A	TiW	CECD/50364
01,10,19	PAL10H8,A,A2/National	B	TiW	CCXP/27014
02	PAL12H6/Monolithic Memories	A	TiW	---
02,11,20	PAL12H6,A,A2/National	B	TiW	---
03	PAL14H4/Monolithic Memories	A	TiW	---
03,12,21	PAL14H4,A,A2/National	B	TiW	---
04	PAL16H2/Monolithic Memories	A	TiW	---
04,13,22	PAL16H2,A,A2/National	B	TiW	---
05	PAL16C1/Monolithic Memories	A	TiW	---
05,14,23	PAL16C1,A,A2/National	B	TiW	---
06	PAL10L8/Monolithic Memories	A	TiW	---
06,15,24	PAL10L8,A,A2/National	B	TiW	---
07	PAL12L6/Monolithic Memories	A	TiW	---
07,16,25	PAL12L6,A,A2/National	B	TiW	---
08	PAL14L4/Monolithic Memories	A	TiW	---
08,17,26	PAL14L4,A,A2/National	B	TiW	---
09	PAL16L2/Monolithic Memories	A	TiW	---
09,18,27	PAL16L2,A,A2/National	B	TiW	---

6.6 Changes from previous issue. Asterisks are not used in this revision to identify changes with respect to the previous issue, due to the extensiveness of the changes.

Custodians:
Army - ER
Navy - EC
Air Force - 17

Review activities:
Army - AR, MI
Navy - OS, SH, TD
Air Force - 11, 19, 85, 99
DLA - ES

User activities:
Army - SM
Navy - AS, CG, MC

Preparing activity:
Air Force - 17

Agent:
DLA - ES

(Project 5962-1035)