MIL-M-38510/423A
9 August 1983
SUPERSEDING
MIL-M-38510/423(USAF)
8 February 1980

QUALIFICATION REQUIREMENTS REMOVED

MILITARY SPECIFICATION

MICROCIRCUITS, DIGITAL, SCHOTTKY TTL, SYSTEM CONTROLLER AND BUS DRIVER, MONOLITHIC SILICON

INACTIVE FOR NEW DESIGN AFTER DATE OF THIS REVISION

This specification is approved for use by all Departments and Agencies of the Department of Defense.

1. SCOPE

1.1 Scope. This specification covers the detail requirements for monolithic silicon, Schottky TTL system controller/bus driver microcircuits. One product assurance class and a choice of case outline and lead finishes are provided for each type and are reflected in the complete part number.

1.2 Part number. The complete part number shall be as specified in MIL-M-38510. With the exception that the "JAN" or "J" certification mark shall not be used.

1.2.1 Device type. Device type shall be as shown in the following:

Device type	Circuit
01	System controller/bus driver

1.2.2 Device class. Device class shall be the product assurance level as defined in MIL-M-38510.

1.2.3 Case outline. The case outline shall be designated as follows:

Letter	Case outline, MIL-M-38510, appendix C
Z	See figure 1 (28-lead, 5/8" x 1-1/2", dual-in-line pack)

1.3 Absolute maximum ratings.

DC output current, into outputs	50 mA
Supply voltage range (V_{CC})	-0.5 to 7.0 Vdc
Input voltage range	-1.0 to 7.0 Vdc
Storage temperature range	-65° to 150°C
Maximum power dissipation, P_D 1/	
Device type 01	1.2 Wdc
Lead temperature (soldering), 10 seconds	300°C
Thermal resistance, junction to case	θ_{JC} = 30°C/W for dual-in-line pack
Junction temperature	T_J = 175°C

1.4 Recommended operating conditions.

Supply voltage (V_{CC})	4.5 Vdc, minimum to 5.5 Vdc, maximum
Minimum high level input voltage	2.0 Vdc
Maximum low level input voltage	0.8 Vdc

1/ Must withstand the added P_D due to short circuit test (e.g., I_{OS}).

Beneficial comments (recommendations, additions, deletions) and any pertinent data which may be of use in improving this document should be addressed to: Rome Air Development Center, RBE-2, Griffiss AFB, NY 13441, by using the self addressed Standardization Document Improvement Proposal (DD Form 1426) appearing at the end of this document or by letter.

Setup time,	
Processor bus to $\overline{STSTB}$- - - - - - - -	12 ns minimum
System bus to HLDA- - - - - - - - - -	10 ns minimum
Hold time,	
Processor bus to $\overline{STSTB}$- - - - - - - -	5 ns minimum
System bus to HLDA- - - - - - - - - -	20 ns minimum
Pulse width,	
$\overline{STSTB}$ - - - - - - - - - - - - - - - - -	25 ns minimum
Case operating temperature range (T_C) -	-55° to +125°C

2. APPLICABLE DOCUMENTS

2.1 Government specifications and standards. Unless otherwise specified, the following specifications and standards, of the issue listed in that issue of the Department of Defense Index of Specifications and Standards specified in the solicitation, form a part of this specification to the extent specified herein.

SPECIFICATION

MILITARY

MIL-M-38510 - Microcircuits, General Spescification for.

STANDARD

MILITARY

MIL-STD-883 - Test Methods and Procedures for Microelectronics.

(Copies of specifications, standards, handbooks, drawings, and publications required by manufacturers in connection with specific acquisition functions should be obtained from the contracting activity or as directed by the contracting officer.)

2.2 Order of precedence. In the event of a conflict between the text of this specification and the references cited herein, the text of this specification shall take precedence.

3. REQUIREMENTS

3.1 Detail specification. The individual item requirements shall be in accordance with MIL-M-38510, and as specified herein.

3.2 Design, construction, and physical dimensions. The design, construction, and physical dimensions shall be as specified in MIL-M-38510, and herein.

3.2.1 Terminal connection. The terminal connections shall be as specified on figure 1.

3.2.2 Truth table. The truth table shall be as specified on figure 2.

3.2.3 Logic diagram. The logic diagram shall be as specified on figure 3.

3.2.4 Case outline. Case outline shall as specified in MIL-M-38510 and in 1.2.3 herein.

3.3 Lead material and finish. Lead material and finish shall be in accordance with MIL-M-38510 (see 6.5).

3.4 Electrical performance characteristics. The electrical performance characteristics are specified in table I, and apply over the full recommended case operating temperature range, unless otherwise specified.

3.5 Electrical test requirements. Electrical test requirements shall be the subgroups specified in table II. The electrical tests for each subgroup are described in table III.

3.6 Manufacturer eligibility. To be eligible to supply microcircuits to this specification a manufacturer shall have a manufacturer certification in accordance with MIL-M-38510 for at least one line. Not necessarily the line producing the device type described herein.

TABLE I. Electrical performance characteristics.

Test	Symbol	Conditions	Limits Min	Limits Max	Unit
High-level output voltage, control outputs, DB_0-DB_7	V_{OH1}	V_{CC} = 4.5 V; I_{OH} = -1 mA 1/	2.4		V
High-level output voltage, D_0-D_7	V_{OH2}	V_{CC} = 4.5 V; I_{OH} = -10 μA 1/	3.3		V
Low-level output voltage, control outputs, DB_0-DB_7	V_{OL1}	V_{CC} = 4.5 V; I_{OL} = 10 mA 1/		0.5	V
Low-level output voltage, D_0-D_7	V_{OL2}	V_{CC} = 4.5 V; I_{OL} = 2 mA 1/		0.5	V
Low-level input current, $\overline{STSTB}$	I_{IL1}	V_{CC} = 5.5 V; V_{IN} = 0.4 V		-500	μA
Low-level input current, D_2, D_6	I_{IL2}	V_{CC} = 5.5 V, V_{IN} = 0.4 V		-750	μA
Low-level input current, all other inputs	I_{IL3}	V_{CC} = 5.5 V; V_{IN} = 0.4 V		-250	μA
High-level input current, DB_0-DB_7	I_{IH1}	V_{CC} = 5.5 V; V_{IN} = 5.5 V		20	μA
High-level input current, all other inputs	I_{IH2}	V_{CC} = 5.5 V; V_{IN} = 5.5 V		100	μA
Output leakage current high, high impedance state, control outputs	I_{ZH}	V_{CC} = 5.5 V; V_{OUT} = 5.5 V		100	μA
Output leakage current low, high impedance state, control outputs	I_{ZL}	V_{CC} = 5.5 V; V_{OUT} = 0.45 V		-100	μA
Input clamp voltage	V_{IC}	V_{CC} = 4.5 V; I_{IN} = -5 mA		-1.2	V
Output short circuit current	I_{OS}	V_{CC} = 5.5 V; V_{OUT} = GND	-15	-100	mA
Power supply current	I_{CC}	V_{CC} = 5.5 V; control inputs and D0-D7 are GND		210	mA
High-level input current, INTA	I_{INT}	V_{CC} = 5.5 V; V_{IN} = 12.0 V; R_{IN} = 1 kΩ ±10%		5	mA
Input capacitance, control inputs	C_{IN}	V_{CC} = 5.0 V; V_{BIAS}= 2.5 V; F = 1.0 MHz		12	pF
Output capacitance, control outputs	C_{OUT}			15	pF
Input/output capacitance, D_0-D_7, DB_0-DB_7	$C_{I/O}$			15	pF

1/ V_{IL} = 0 V; V_{IH} = 4.5 V.

TABLE I. Electrical performance characteristics.

Test	Symbol	Conditions	Limits Min	Limits Max	Unit
Propagation delay, $\overline{STSTB}$ to control outputs	t_{PHL1}	See figure 5	20	75	ns
Propagation delay, DBIN to $\overline{INTA}$, $\overline{I/OR}$, $\overline{MEMR}$	t_{PLH2}			35	ns
Propagation delay, HLDA to $\overline{INTA}$, $\overline{I/OR}$, $\overline{MEMR}$	t_{PLH3}			28	ns
Propagation delay, WR to MEMW, I/OW	t_{PLH4}		5	60	ns
	t_{PHL4}		5	60	ns
Propagation delay, system bus (DB_0-DB_7) to processor bus (D_0-D_7)	t_{PLH5}			45	ns
	t_{PHL5}			45	ns
Processor delay, DBIN to processor bus: Into high impedance state	t_{PHZ1}			45	ns
	t_{PLZ1}			45	ns
Out of high impedance state	t_{PZH1}			45	ns
	t_{PZL1}			45	ns
Propagation delay, processor bus (D_0-D_7) to system bus (DB_0-DB_7)	t_{PLH6}		5	40	ns
	t_{PHL6}		5	40	ns
Propagation delay $\overline{STSTB}$ to system bus from high impedance state	t_{PZH2}			36	ns
	t_{PZL2}			36	ns
Propagation delay, $\overline{BUSEN}$ to system bus: Into high impedance state	t_{PHZ3}			35	ns
	t_{PLZ3}			35	ns
Out of high impedance state	t_{PZH3}			35	ns
	t_{PZL3}			35	ns
Setup time, processor bus to $\overline{STSTB}$	t_{SLH1}	V_{CC} = 5.0 V	12		ns
	t_{SHL1}				
Setup time, system bus to HLDA	t_{SLH2}		10		ns
	t_{SHL2}				
Hold time, processor bus to $\overline{STSTB}$	t_{HLH1}		5		ns
	t_{HHL1}				
Hold time, system bus to HLDA	t_{HLH2}		20		ns
	t_{HHL2}				
Pulse width, $\overline{STSTB}$	t_{WL}		25		ns

TABLE II. Electrical test requirements.

MIL-STD-883 test requirements	Subgroups (see (see table III) Class B devices
Interim electrical parameters (pre burn-in) (method 5004)	1
Final electrical test parameters (method 5004)	1*,2,3,7,9, 10,11
Group A test requirements (method 5005)	1,2,3,7,8, 9,10,11
Group C end point electrical parameters (method 5005)	N/A
Additional electrical subgroups for group C periodic inspections	N/A
Group D end point electrical parameters (method 5005)	1,2,3

*PDA applies to subgroup 1 (see 4.3c).

3.7 Certification. Certification in accordance with MIL-M-38510 is not required for this device.

3.8 Marking. Marking shall be in accordance with MIL-M-38510 and 1.2 herein. At the option of the manufacturer, the country of origin may be omitted from the body of the microcircuit, but shall be retained on the initial container. The "JAN" or "J" certification mark shall not be used.

4. QUALITY ASSURANCE PROVISIONS

4.1 Sampling and inspection. Sampling and inspection procedures shall be in accordance with MIL-M-38510 and methods 5005 and 5007, as applicable, of MIL-STD-883, except as modified herein.

4.2 Qualification inspection. Qualification inspection is not required.

4.3 Screening. Screening shall be in accordance with method 5004 of MIL-STD-883, and shall be conducted on all devices prior to quality conformance inspection. The following additional criteria shall apply:

a. Burn-in test (method 1015 of MIL-STD-883).
   1. Test condition D or E, using the circuit shown on figure 5, or equivalent.
   2. T_A = 125°C minimum.
b. Interim and final electrical test parameters shall be as specified in table II, except interim electrical parameters test prior to burn-in is optional at the discretion of the manufacturer.
c. The percent defective allowable for class B devices shall be 10 percent based on failures from group A, subgroup 1 test after cooldown as final electrical test in accordance with method 5004 of MIL-STD-883, and with no intervening electrical measurements. If interim electrical parameter tests are performed prior to burn-in, failures resulting from pre burn-in screening may be excluded from the PDA. If interim electrical parameter tests prior to burn-in are omitted, then all screening failures shall be included in the PDA. The verified failures of group A, subgroup 1 after burn-in divided by the total number of devices submitted for burn-in in that lot shall be used to determine the percent defective for that lot, and the lot shall be accepted or rejected based on the PDA for the applicable device class.

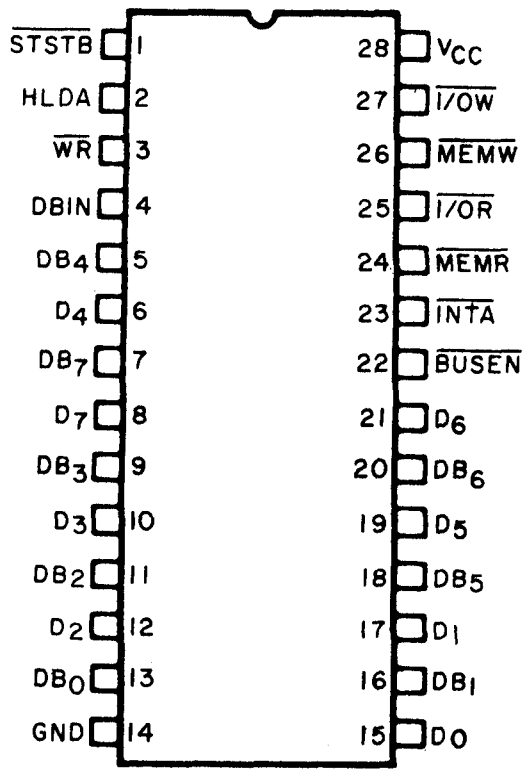

FIGURE 1. Case outline and terminal connections.

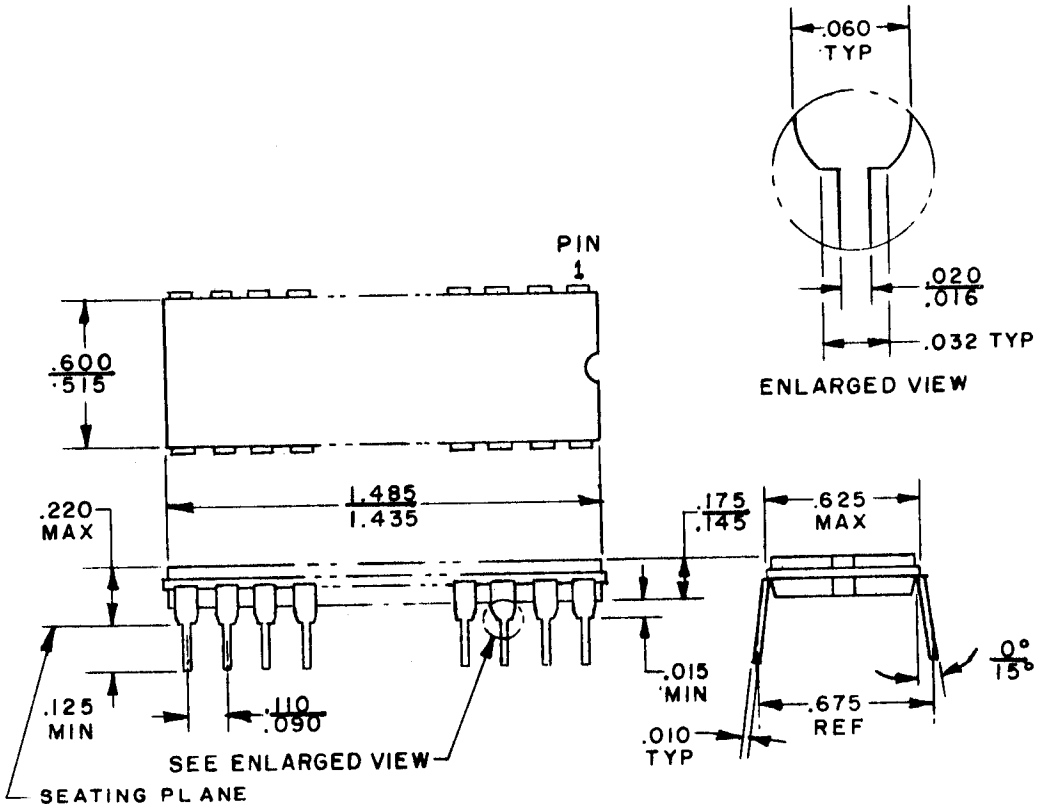

Case outline Z

INCHES	MM	INCHES	MM
.010	.25	.145	3.68
.015	.38	.175	4.44
.016	.41	.220	5.59
.020	.51	.515	13.08
.032	.81	.600	15.24
.060	1.52	.625	15.88
.090	2.29	.675	17.14
.110	2.79	1.435	36.45
.125	3.18	1.485	37.72

FIGURE 1. Case outline and terminal connections - Continued.

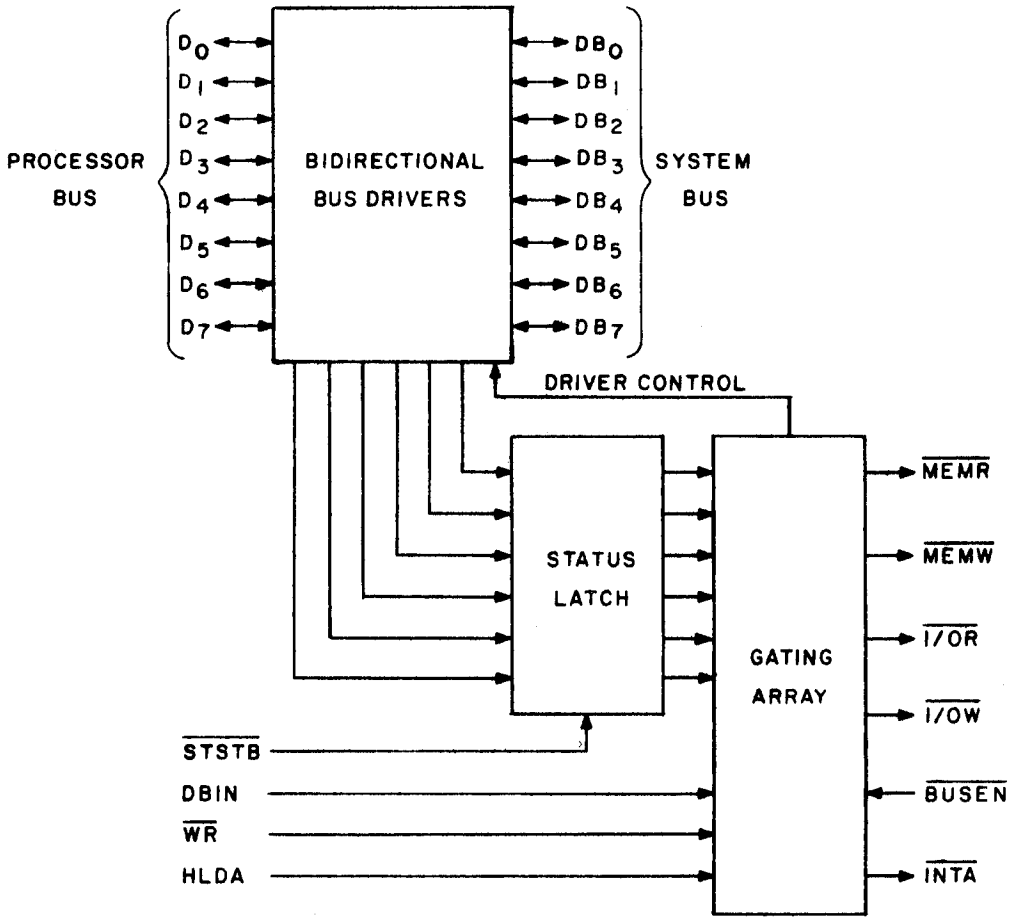

FIGURE 2. Block diagram and truth table.

TYPE OF MACHINE CYCLE

	DATA BUS BIT	STATUS INFORMATION	INSTRUCTION FETCH	MEMORY READ	MEMORY WRITE	STACK READ	STACK WRITE	INPUT READ	OUTPUT WRITE	INTERRUPT ACKNOWLEDGE	HALT ACKNOWLEDGE	INTERRUPT ACKNOWLEDGE WHILE HALT
		1	2	3	4	5	6	7	8	9	10
D_0	INTA	0	0	0	0	0	0	0	1	0	1
D_1	$\overline{WO}$	1	1	0	1	0	1	0	1	1	1
D_2	STACK	0	0	0	1	1	0	0	0	0	0
D_3	HLTA	0	0	0	0	0	0	0	0	1	1
D_4	OUT	0	0	0	0	0	0	1	0	0	0
D_5	M_1	1	0	0	0	0	0	0	1	0	1
D_6	INP	0	0	0	0	0	1	0	0	0	0
D_7	MEMR	1	1	0	1	0	0	0	0	1	0

STATUS WORD

CONTROL SIGNALS

INTA
(NONE)
$\overline{INTA}$
$\overline{I/O\ W}$
$\overline{I/O\ R}$
$\overline{MEM\ W}$
$\overline{MEM\ R}$
$\overline{MEM\ W}$
$\overline{MEM\ R}$
$\overline{MEM\ R}$

FIGURE 2. Block diagram and truth table - Continued.

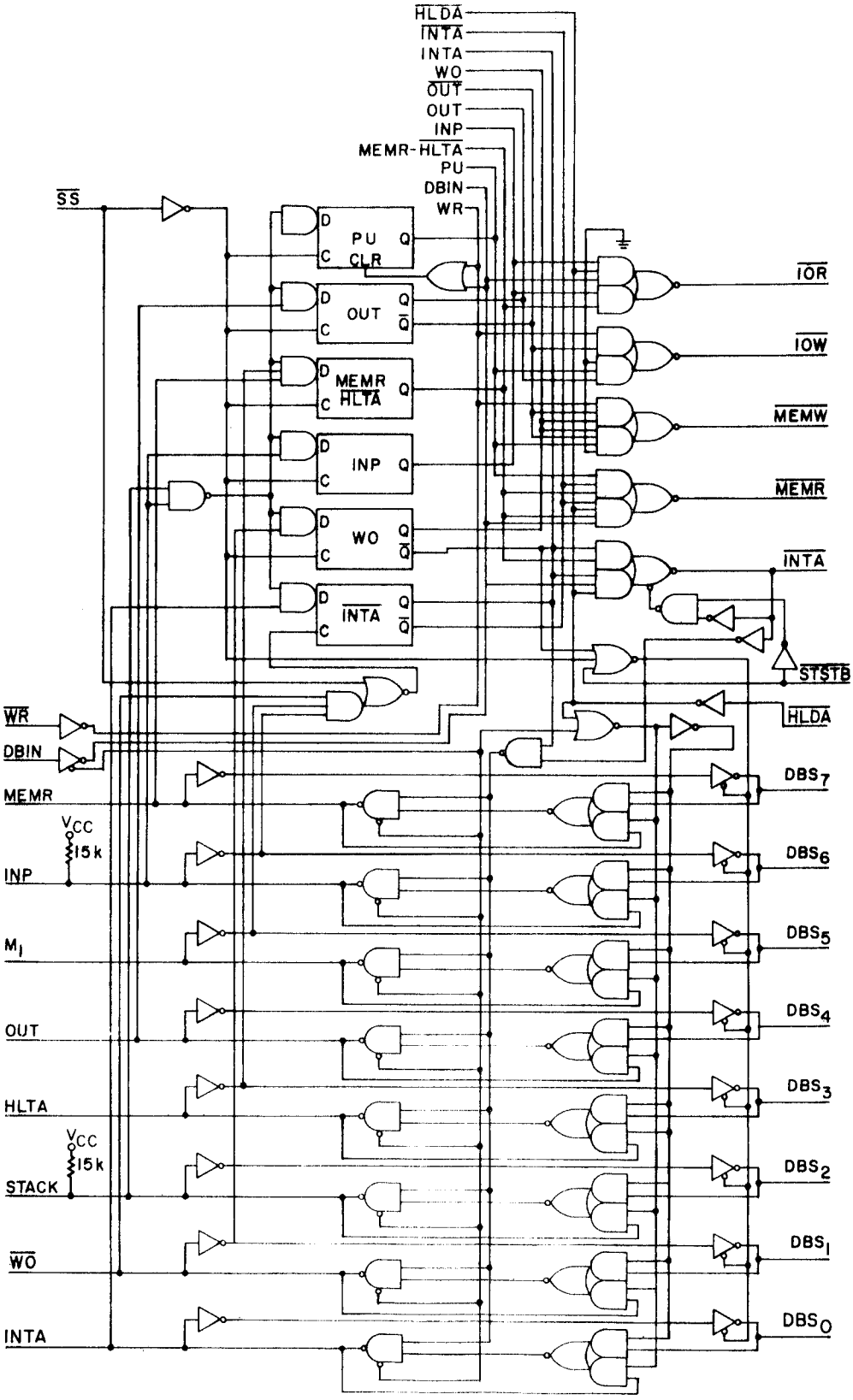

FIGURE 3. Logic diagram.

Pin	Pin name	Schematic
1	$\overline{STSTB}$	D
2	HLDA	A
3	$\overline{WR}$	A
4	DB_{IN}	C
5	DB_4	B+E
6	D_4	A+F
7	DB_7	B+E
8	D_7	A+F
9	DB_3	B+E
10	D_3	A+F
11	DB_2	B+E
12	D_2	A+F
13	DB_0	B+E
14	GND	
15	D_0	A+F
16	DB_1	B+E
17	D_1	A+F
18	DB_5	B+E
19	D_5	A+F
20	DB_6	B+E
21	D_6	A+F
22	$\overline{BUSEN}$	A
23	$\overline{INTA}$	E
24	$\overline{MEMR}$	E
25	$\overline{I/OR}$	E
26	$\overline{MEMW}$	E
27	$\overline{I/OW}$	E

FIGURE 4. Schematic circuit.

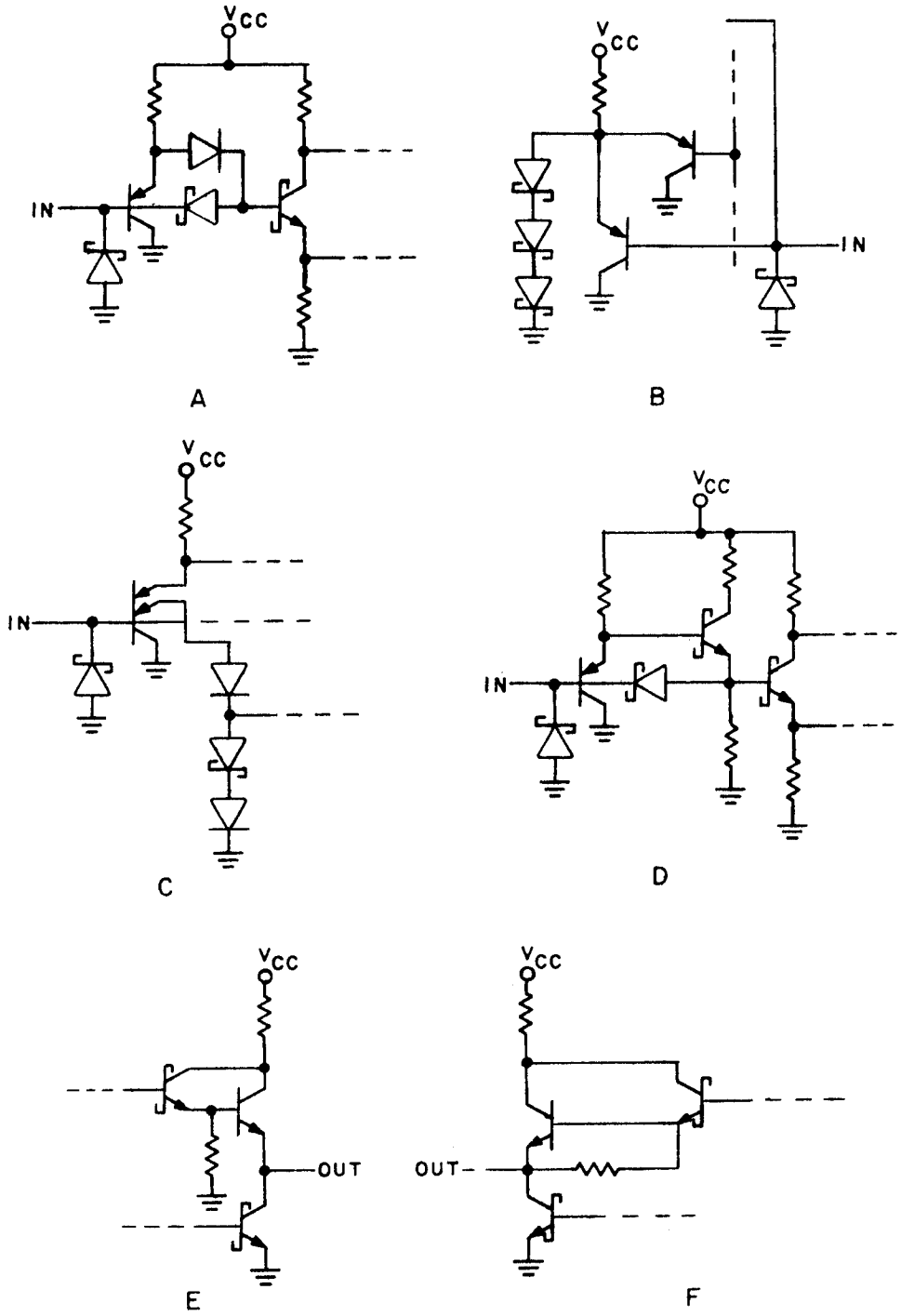

FIGURE 4. Schematic circuit - Continued.

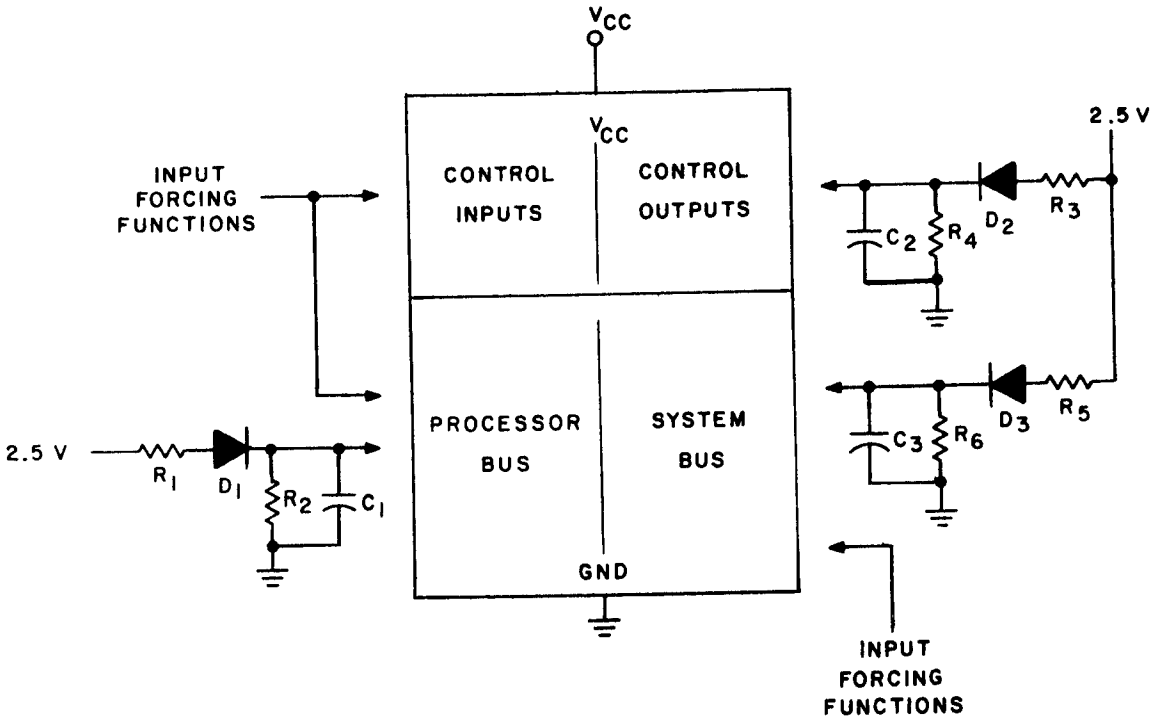

NOTES:
1. C_1 = 25 pF; C_2 = C_3 = 100 pF.
2. R_1 = 600Ω; R_2 = 10 kΩ; R_3 = R_5 = 120Ω; R_4 = 3 kΩ; R_6 = 2 kΩ; all resistors are ±5%.
3. D_1 = D_2 = D_3 = 1N3064 or equivalent.
4. V_{CC} = 5.0 V.
5. Setup times -
   t_{SLH3} = 30 ns.
   t_{SHL3} = 30 ns.
6. Hold times -
   t_{HLH3} = 30 ns.
   t_{HHL3} = 30 ns.
7. Pulse widths -
   t_{WH} = 50 ns.
   t_{WD} = 50 ns.
8. Pulse repetition rate -
   t_p = 125 ns.

FIGURE 5. Switching waveforms.

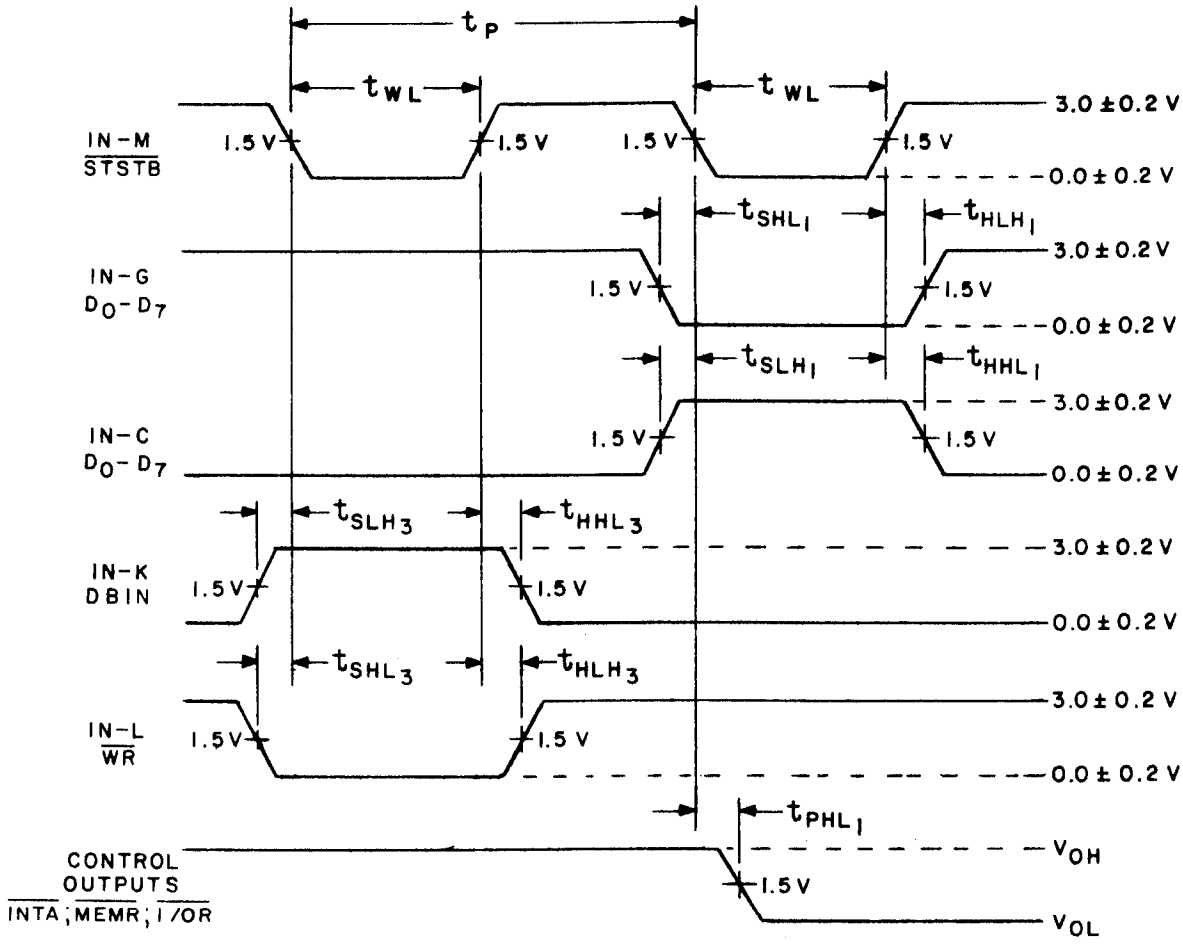

STSTB to control outputs

FIGURE 5. Switching waveforms - Continued.

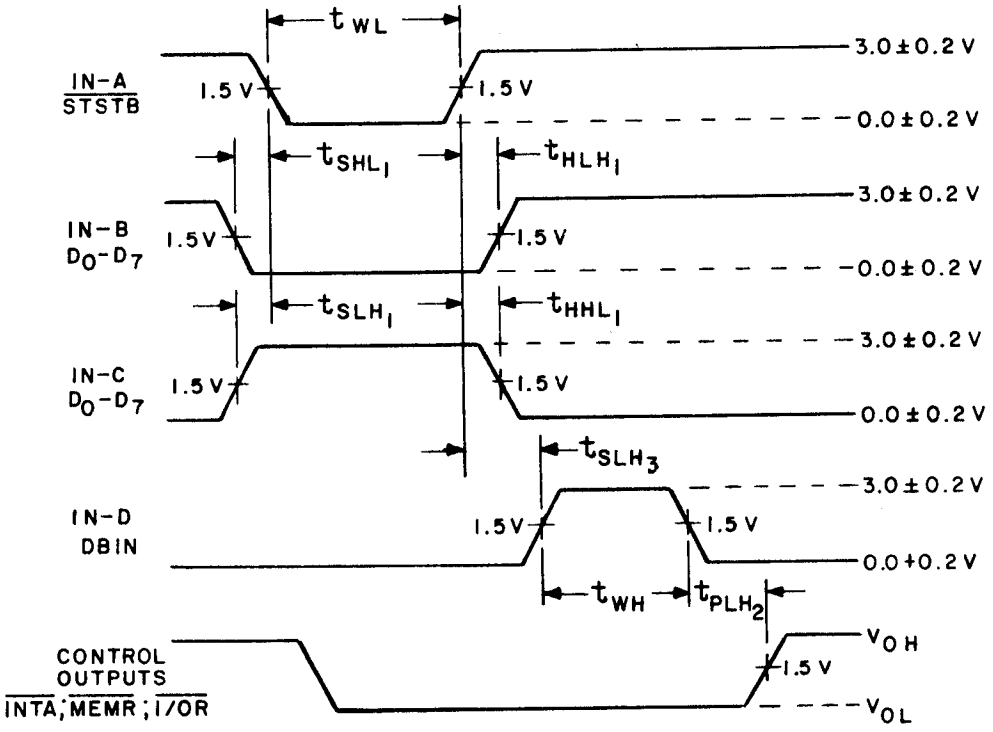

DBIN to control outputs

FIGURE 5. Switching waveforms - Continued.

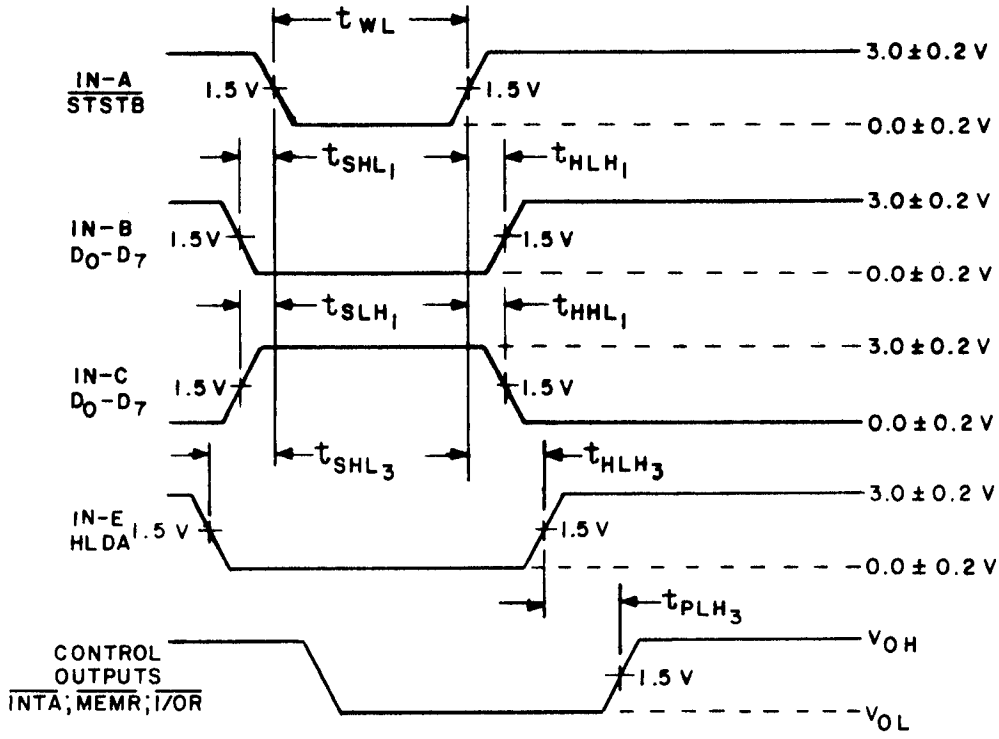

HLDA to control outputs

FIGURE 5. Switching waveforms - Continued.

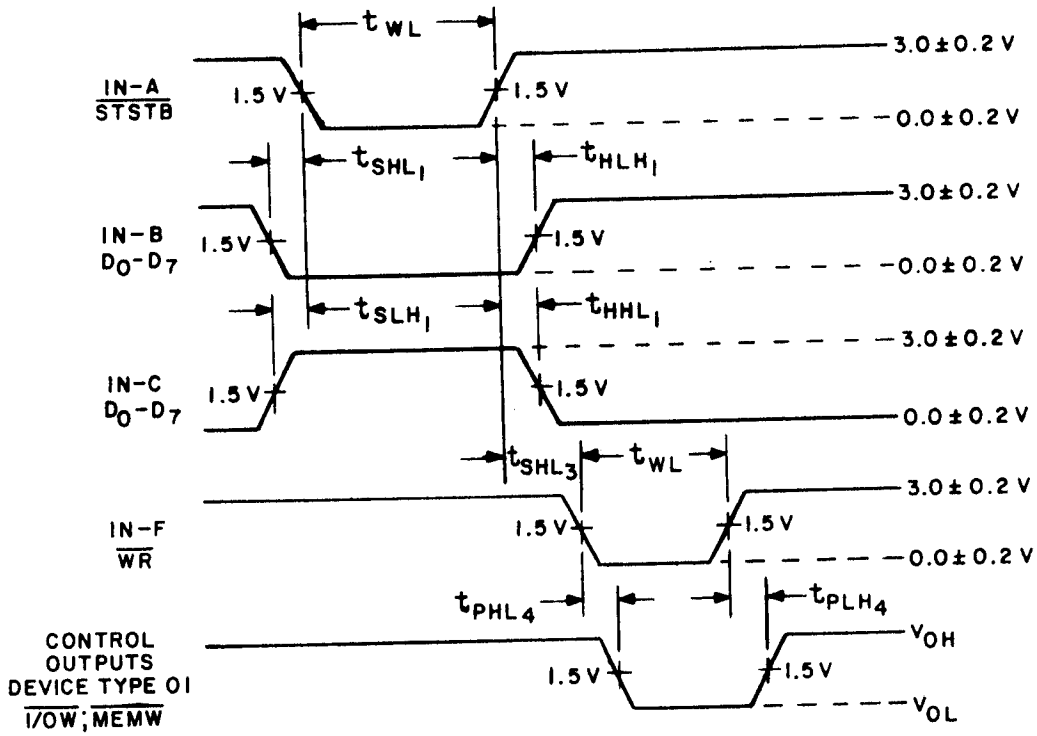

WR to control outputs

FIGURE 5. Switching waveforms - Continued.

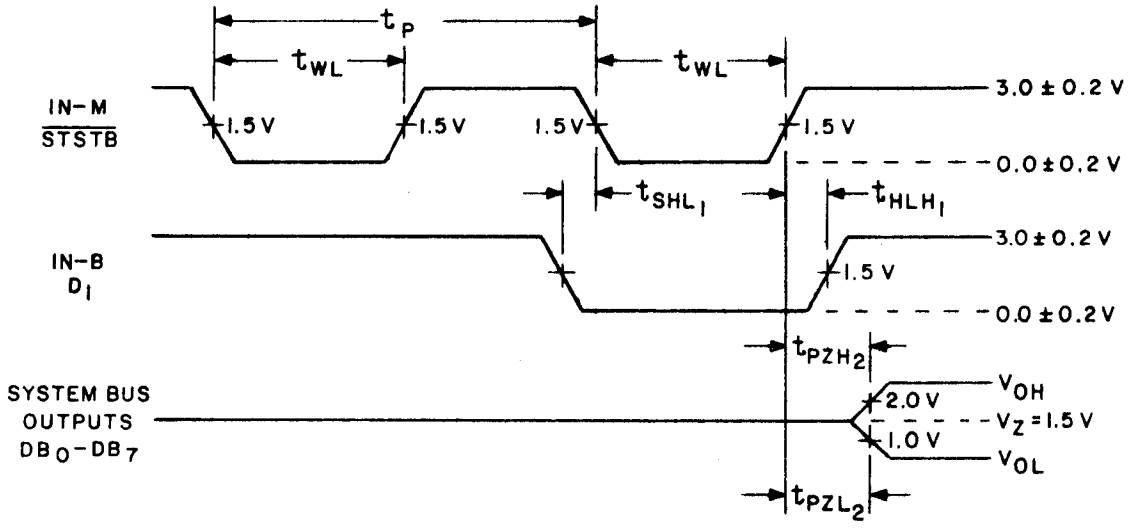

STSTB to system bus - high impedance state

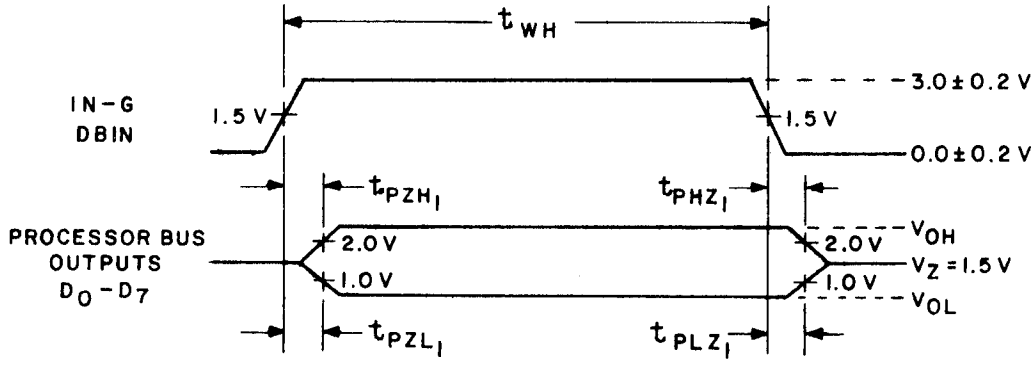

DBIN to processor bus - high impedance state

FIGURE 5. Switching waveforms - Continued.

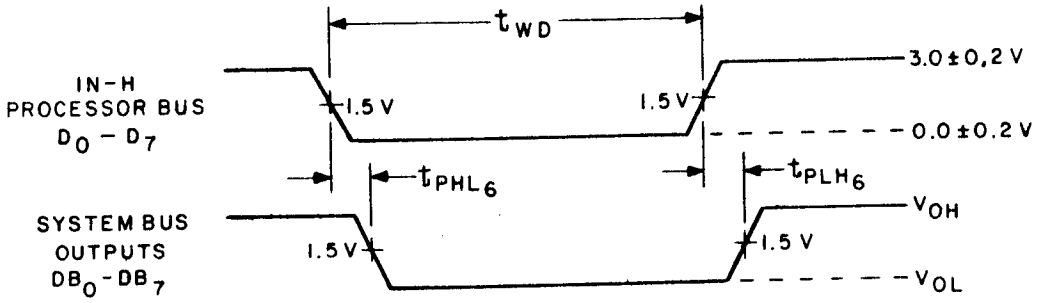

Processor bus to system bus

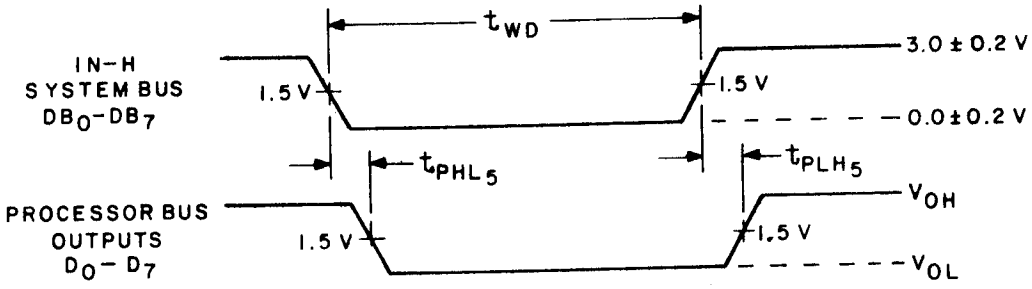

System bus to processor bus

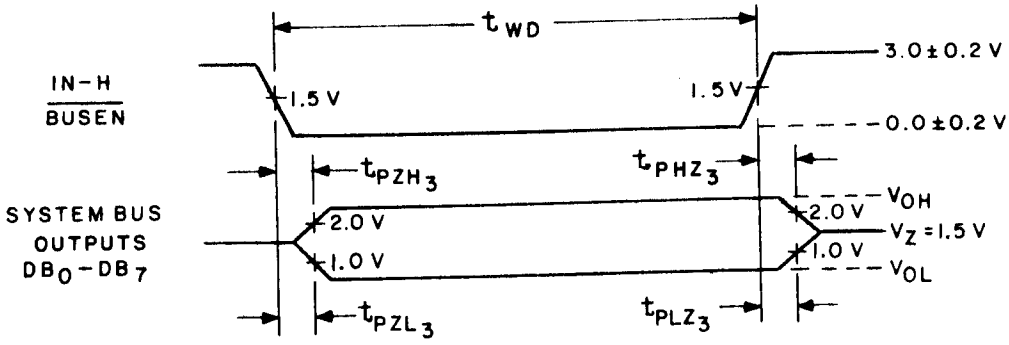

$\overline{BUSEN}$ to system bus - high impedance state

FIGURE 5. Switching waveforms - Continued.

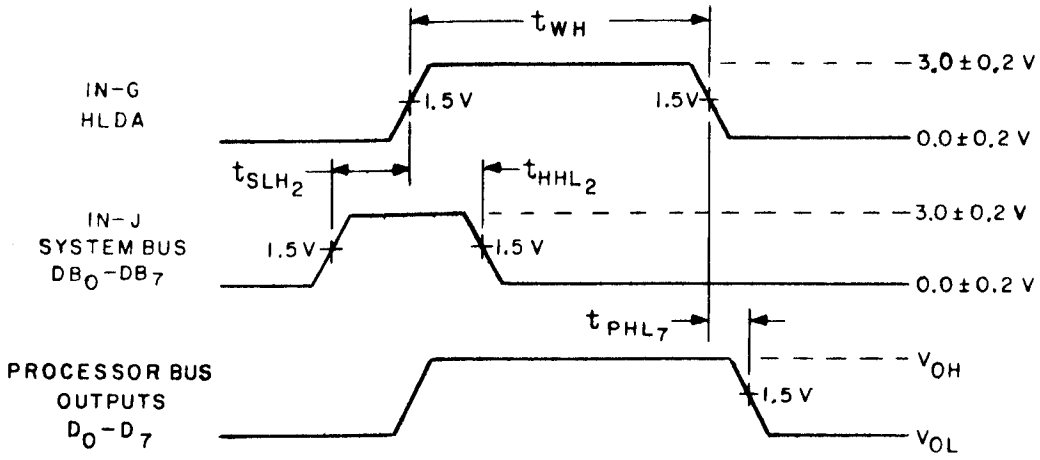

System bus setup/hold time check

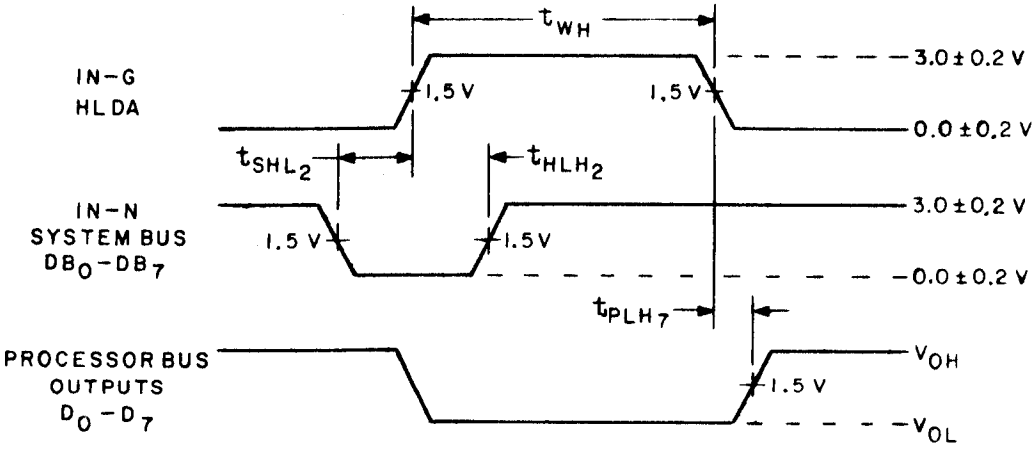

System bus setup/hold time check

FIGURE 5. Switching waveforms - Continued.

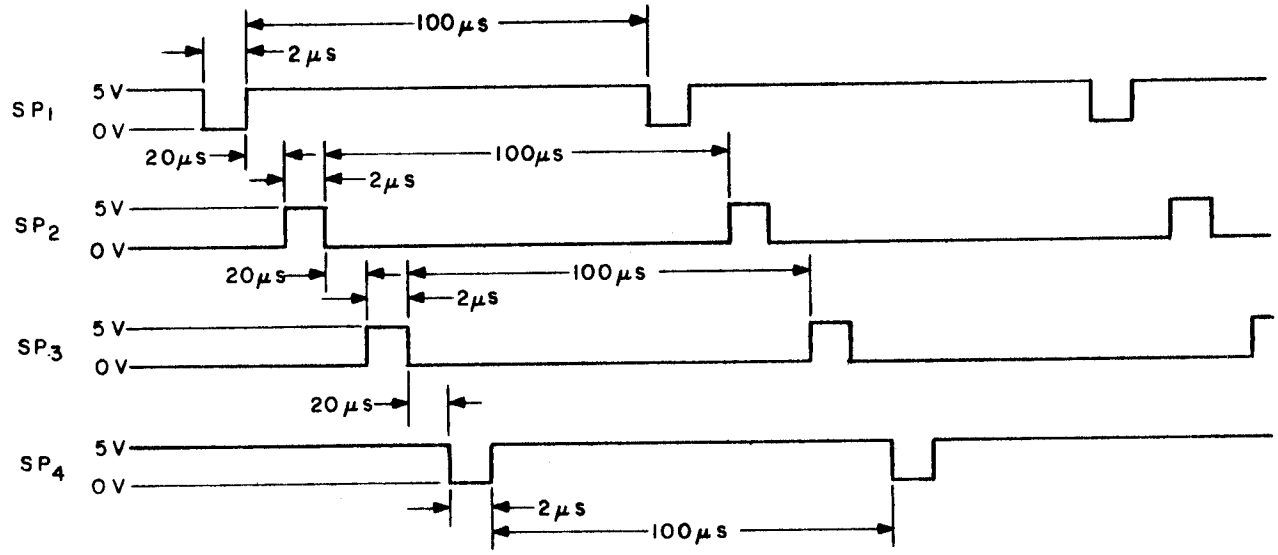

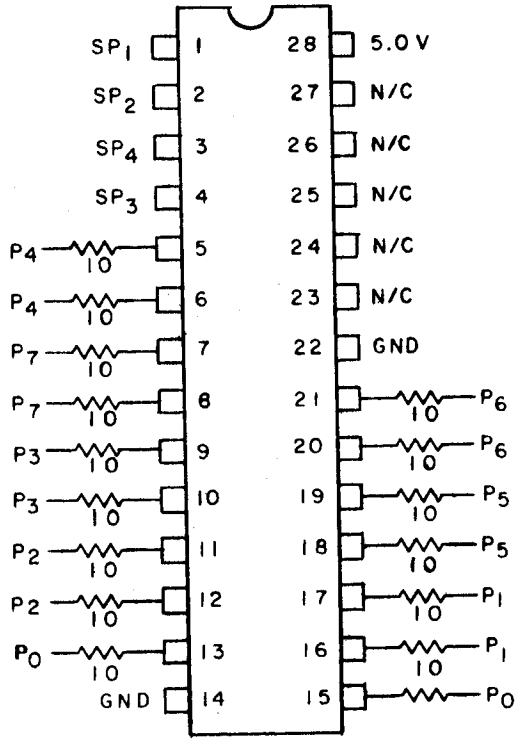

All resistor values are in kilohms unless otherwise specified.

Pin	Pin name	Stress
1	$\overline{STSTB}$	SP_1
2	HLDA	SP_2
3	$\overline{WR}$	SP_4
4	DB_{IN}	SP_3
5	$\overline{DB_4}$	P_4
6	D_4	P_4
7	$\overline{DB_7}$	P_7
8	D_7	P_7
9	$\overline{DB_3}$	P_3
10	D_3	P_3
11	$\overline{DB_2}$	P_2
12	D_2	P_2
13	$\overline{DB_0}$	P_0
14	GND	GND
15	D_0	P_0
16	$\overline{DB_1}$	P_1
17	D_1	P_1
18	$\overline{DB_5}$	P_5
19	D_5	P_5
20	$\overline{DB_6}$	P_6
21	D_6	P_6
22	$\overline{BUSEN}$	GND
23	$\overline{INTA}$	N/C
24	$\overline{MEMR}$	N/C
25	$\overline{I/OR}$	N/C
26	$\overline{MEMW}$	N/C
27	$\overline{I/OW}$	N/C
28	V_{CC}	+5.0 V

FIGURE 6. Burn-in circuit and waveforms.

TABLE III. Group A inspection
Terminal conditions (pins not designated may

Subgroup	Symbol	MIL-STD-883 method	Pin / Test No.	1 / $\overline{STSTB}$	2 / HLDA	3 / $\overline{WR}$	4 / DBIN	5 / DB_4	6 / D_4	7 / DB_7	8 / D_7	9 / DB_3	10 / D_3	11 / DB_2	12 / D_2	13 / DB_0	14 / GND
1 T_C=25°C	V_{OH1}	3006	1	C 1/	4.5 V	4.5 V									4.5 V		GND
			2														
			3														
			4														
			5														
			6				GND	-1 mA	4.5 V								
			7							-1 mA	4.5 V						
			8									-1 mA	4.5 V				
			9											-1 mA	4.5 V		
			10												GND	-1 mA	
			11														
			12														
			13														
	V_{OH2}		14		GND		4.5 V	4.5 V	-10 μA								
			15							4.5 V	-10 μA						
			16									4.5 V	-10 μA				
			17											4.5 V	-10 μA		
			18													4.5 V	
			19														
			20														
			21														
	V_{OL1}		22	C 1/		GND			GND		GND		GND		GND		
			23								4.5 V						
			24								GND						
			25														
			26						4.5 V								
			27				GND	10 mA	GND								
			28							10 mA	GND						
			29									10 mA	GND				
			30											10 mA			
			31													10 mA	
			32														
			33														
			34														
	V_{OL2}		35		GND		4.5 V	GND	2 mA								
			36							GND	2 mA						
			37									GND	2 mA				
			38											GND	2 mA		
			39													GND	
			40														
			41														
			42														
	I_{IL1}	3009	43	0.4 V													
	I_{IL2}		44		GND		GND							GND	0.4 V		
	I_{IL2}		45														
	I_{IL3}		46					GND	0.4 V								
			47							GND	0.4 V						
			48									GND	0.4 V				
			49													GND	
			50														
			51														
			52					0.4 V	GND								
			53							0.4 V	GND						
			54									0.4 V	GND				
			55											0.4 V	GND		

See footnotes at end of table.

for device type 01.
be high ≥2.0 V, low ≤0.7 V, or open).

15	16	17	18	19	20	21	22	23	24	25	26	27	28	Measured terminal	Test limits		Unit
D_0	DB_1	D_1	DB_5	D_5	DB_6	D_6	$\overline{BUSEN}$	$\overline{INTA}$	$\overline{MEMR}$	$\overline{I/OR}$	$\overline{MERW}$	$\overline{I/OW}$	V_{CC}		Min	Max	
						4.5 V	GND	-1 mA					4.5 V	23	2.4		V
									-1 mA					24			
										-1 mA				25			
											-1 mA			26			
												-1 mA		27			
						GND								5			
														7			
														9			
														11			
4.5 V														13			
	-1 mA	4.5 V												16			
			-1 mA	4.5 V										18			
					-1 mA	4.5 V								20			
							4.5 V							6	3.3		
														8			
														10			
														12			
-10 μA														15			
	4.5 V	-10 μA												17			
			4.5 V	-10 μA										19			
					4.5 V	-10 μA								21			
4.5 V		4.5 V		4.5 V		GND	GND	10 mA						23		0.5	
GND		4.5 V		GND		GND			10 mA					24			
		4.5 V				4.5 V				10 mA				25			
		GND				GND					10 mA			26			
		GND				GND						10 mA		27			
														5			
														7			
														9			
														11			
GND														13			
	10 mA	GND												16			
			10 mA	GND										18			
					10 mA	GND								20			
							4.5 V							6			
														8			
														10			
														12			
2 mA														15			
	GND	2 mA												17			
			GND	2 mA										19			
					GND	2 mA								21			
													5.5 V	1		-500	μA
							4.5 V							12		-750	
					GND	0.4 V								21		-750	
														6		-250	
														8			
														10			
0.4 V														15			
	GND	0.4 V												17			
			GND	0.4 V										19			
														5			
														7			
														9			
														11			

TABLE III. Group A inspection
Terminal conditions (pins not designated may

Subgroup	Symbol	MIL-STD-883 method	Pin	1	2	3	4	5	6	7	8	9	10	11	12	13	14
			Test No.	$\overline{STSTB}$	HLDA	$\overline{WR}$	DBIN	DB_4	D_4	DB_7	D_7	DB_3	D_3	DB_2	D_2	DB_0	GND
1 T_C=25°C	I_{IL3}	3009	56				GND									0.4 V	GND
			57														
			58														
			59														
			60					0.4 V	4.5 V								
			61							0.4 V	4.5 V						
			62									0.4 V	4.5 V				
			63											0.4 V	4.5 V		
			64													0.4 V	
			65														
			66														
			67														
	I_{IH1}	3010	68					5.5 V	GND								
			69							5.5 V	GND						
			70									5.5 V	GND				
			71											5.5 V	GND		
			72													5.5 V	
			73														
			74														
			75														
			76					5.5 V	4.5 V								
			77							5.5 V	4.5 V						
			78									5.5 V	4.5 V				
			79											5.5 V	4.5 V		
			80													5.5 V	
			81														
			82														
			83														
	I_{IH2}		84	5.5 V													
			85		5.5 V												
			86			5.5 V											
			87				5.5 V										
			88														
			89		GND		GND	GND	5.5 V								
			90							GND	5.5 V						
			91									GND	5.5 V				
			92											GND	5.5 V		
			93													GND	
			94														
			95														
			96														
			97					4.5 V	5.5 V								
			98							4.5 V	5.5 V						
			99									4.5 V	5.5 V				
			100											4.5 V	5.5 V		
			101													4.5 V	
			102														
			103														
			104														
	I_{ZH}		105	C 1/	4.5 V	4.5 V									4.5 V		
			106														
			107														
			108														
			109														
			110		GND	GND			GND		GND		GND		GND		
			111								4.5 V						
			112								GND						
			113								GND						
			114						4.5 V		GND						

See footnotes at end of table.

for device type 01 -Continued.
be high ≥2.0 V, low ≤0.7 V, or open).

15	16	17	18	19	20	21	22	23	24	25	26	27	28	Measured terminal	Test limits		Unit
D_0	DB_1	D_1	DB_5	D_5	DB_6	D_6	$\overline{BUSEN}$	$\overline{INTA}$	$\overline{MEMR}$	$\overline{I/OR}$	$\overline{MERW}$	$\overline{I/OW}$	V_{CC}		Min	Max	
GND							4.5 V						5.5 V	13		-250	μA
	0.4 V	GND												16			
			0.4 V	GND										18			
					0.4 V	GND								20			
														5			
														7			
														9			
														11			
4.5 V														13			
	0.4 V	4.5 V												16			
			0.4 V	4.5 V										18			
					0.4 V	4.5 V								20			
														5		20	
														7			
														9			
														11			
														13			
GND														16			
	5.5 V	GND												18			
			5.5 V	GND										20			
					5.5 V	GND								5			
														7			
														9			
														11			
4.5 V														13			
	5.5 V	4.5 V												16			
			5.5 V	4.5 V										18			
					5.5 V	4.5 V								20			
														1		100	
														2			
														3			
														4			
							5.5 V							22			
							4.5 V							6			
														8			
														10			
														12			
5.5 V														15			
	GND	5.5 V												17			
			GND	5.5 V										19			
					GND	5.5 V								21			
														6			
														8			
														10			
														12			
5.5 V														15			
	4.5 V	5.5 V												17			
			4.5 V	5.5 V										19			
					4.5 V	5.5 V								21			
						4.5 V		5.5 V						23			
									5.5 V					24			
										5.5 V				25			
											5.5 V			26			
												5.5 V		27			
4.5 V		4.5 V		4.5 V		GND		5.5 V						23			
GND		4.5 V		GND		GND			5.5 V					24			
		4.5 V				4.5 V				5.5 V				25			
		GND				GND					5.5 V			26			
		GND				GND						5.5 V		27			

TABLE III. Group A inspection
Terminal conditions (pins not designated may

Subgroup	Symbol	MIL-STD-883 method	Pin / Test No.	1 / $\overline{STSTB}$	2 / HLDA	3 / $\overline{WR}$	4 / DBIN	5 / DB_4	6 / D_4	7 / DB_7	8 / D_7	9 / DB_3	10 / D_3	11 / DB_2	12 / D_2	13 / DB_0	14 / GND
1 T_C=25°C	I_{ZL}		115	C 1/	4.5 V	4.5 V									4.5 V		GND
			116														
			117														
			118														
			119														
			120		GND	GND			GND		GND		GND		GND		
			121								4.5 V						
			122								GND						
			123														
			124						4.5 V								
	C_{IN}		125	2.5 V													
			126		2.5 V												
			127			2.5 V											
			128				2.5 V										
			129														
	C_{OUT}		130														
			131														
			132														
			133														
			134														
	$C_{I/O}$		135		GND		GND	GND	2.5 V								
			136							GND	2.5 V						
			137									GND	2.5 V				
			138											GND	2.5 V		
			139													GND	
			140														
			141														
			142														
			143					2.5 V	GND								
			144							2.5 V	GND						
			145									2.5 V	GND				
			146											2.5 V	GND		
			147													2.5 V	
			148														
			149														
			150														
	I_{OS}	3011	151	C 1/	4.5 V	4.5 V									4.5 V		
			152														
			153														
			154														
			155														
			156				GND	GND	4.5 V								
			157							GND	4.5 V						
			158									GND	4.5 V				
			159											GND	4.5 V		
			160												GND	GND	
			161														
			162														
			163														
			164		GND		4.5 V	4.5 V	GND								
			165							4.5 V	GND						
			166									4.5 V	GND				
			167											4.5 V	GND		
			168													4.5 V	
			169														
			170														
			171														
	I_{CC}	3005	172	C 1/		GND	GND		GND		GND		GND		GND		

See footnotes at end of table.

for device type 01 -Continued.
be high ≥2.0 V, low ≤0.7 V, or open).

15	16	17	18	19	20	21	22	23	24	25	26	27	28	Measured terminal	Test limits		Unit
D_0	DB_1	D_1	DB_5	D_5	DB_6	D_6	$\overline{BUSEN}$	$\overline{INTA}$	$\overline{MEMR}$	$\overline{I/OR}$	$\overline{MERW}$	$\overline{I/OW}$	V_{CC}		Min	Max	
							4.5 V	0.45 V					5.5 V	23		-100	μA
									0.45 V					24			
										0.45 V				25			
											0.45 V			26			
												0.45 V		27			
4.5 V		4.5 V		4.5 V		GND		0.45 V						23			
GND				GND		GND			0.45 V					24			
						4.5 V				0.45 V				25			
		GND				GND					0.45 V			26			
		GND				GND						0.45 V		27			
													5.0 V	1		12	pF
														2			
														3			
														4			
							2.5 V							22			
							GND	2.5 V						23		15	
									2.5 V					24			
										2.5 V				25			
											2.5 V			26			
												2.5 V		27			
							4.5 V							6			
														8			
														10			
														12			
2.5 V														15			
	GND	2.5 V												17			
			GND	2.5 V										19			
					GND	2.5 V								21			
														5			
														7			
														9			
														11			
GND														13			
	2.5 V	GND												16			
			2.5 V	GND										18			
					2.5 V	GND								20			
						4.5 V	GND	GND					5.5 V	23	-15	-100	mA
									GND					24			
										GND				25			
											GND			26			
												GND		27			
						GND								5			
														7			
														9			
														11			
4.5 V														13			
	GND	4.5 V												16			
			GND	4.5 V										18			
					GND	4.5 V								20			
							4.5 V							6			
														8			
														10			
														12			
GND														15			
	4.5 V	GND												17			
			4.5 V	GND										19			
					4.5 V	GND								21			
GND		GND		GND		GND	GND							28		210	

TABLE III. Group A inspection
Terminal conditions (pins not designated may

Subgroup	Symbol	MIL-STD-883 method	Pin / Test No.	1 / $\overline{STSTB}$	2 / HLDA	3 / $\overline{WR}$	4 / DBIN	5 / DB_4	6 / D_4	7 / DB_7	8 / D_7	9 / DB_3	10 / D_3	11 / DB_2	12 / D_2	13 / DB_0	14 / GND
1	V_{IC}		173	-5 mA													GND
T_C=25°C			174		-5 mA												
			175			-5 mA											
			176				-5 mA										
			177														
			178	C 1/	GND		4.5 V	-5 mA							GND		
			179							-5 mA							
			180									-5 mA					
			181													-5 mA	
			182														
			183														
			184														
			185				GND		-5 mA								
			186								-5 mA						
			187										-5 mA				
			188												-5 mA		
			189												GND		
			190														
			191														
			192														
			193														
2	Same tests, terminal conditions, and limits for subgroup 1, except T_C = 125°C and V_{IC} tests are omitted.																
3	Same tests, terminal conditions, and limits for subgroup 1, except T_C = -55°C and V_{IC} tests are omitted.																
7	Funct-	3014	194	B	X	X	B	X	X	X	X	X	X	X	X	X	GND
T_C = 25°C	ional		195		A	A		Z	A	Z	A	Z	B	Z	B	Z	
	tests		196			A			B		B		A		A		
			197			A			A		A		B		B		
			198			B											
			199			A											
			200	A		A		H		H		L		L		H	
			201			A								H	A		
			202			B								H	A		
			203			A								H	A		
			204	B		A		Z	B	Z		Z		Z	B	Z	
			205	B		B		Z	B	Z		Z		Z		Z	
			206	B		A		Z	B	Z		Z		Z		Z	
			207	A		A		L	B	H		L		L		L	
			208	A		A		H	A	H		H	A	L		H	
			209	A		B		H	A	H		H		L		H	
			210	B	B	A		Z	B	Z		Z		Z	A	Z	
			211	B		B											
			212	B		A											
			213	A		A											
			214			A							B		B		
			215			B							B		B		
			216						A		B		B		B		
			217						Z		Z		Z		H		
			218				A		X		X		X		X		
			219				B		Z		Z		Z		Z		
			220	B					A		A		B		A		
			221						A						A		
			222						A						A		
			223						B						B		
			224						B						A		
			225						A						A		
			226	A					A						A		
			227	A					Z		Z		Z		Z		
			228	A			A		X		X		X		X		

See footnotes at end of table.

for device type 01 -Continued.
be high ≥2.0 V, low ≤0.7 V, or open).

15	16	17	18	19	20	21	22	23	24	25	26	27	28	Measured terminal	Test limits		Unit
D_0	DB_1	D_1	DB_5	D_5	DB_6	D_6	$\overline{BUSEN}$	$\overline{INTA}$	$\overline{MEMR}$	$\overline{I/OR}$	$\overline{MERW}$	$\overline{I/OW}$	V_{CC}		Min	Max	
													4.5 V	1		-1.2	V
														2			
														3			
														4			
							-5 mA							22			
							4.5 V							5			
														7			
														9			
														11			
														13			
	-5 mA													16			
			-5 mA											18			
					-5 mA									20			
						GND	GND							6			
														8			
														10			
														12			
-5 mA														15			
		-5 mA												17			
				-5 mA										19			
						-5 mA								21			

X	X	X	X	X	X	X	X	X	X	X	X	X	V_{CC}	All outputs	See 2/ through 6/
A	Z	B	Z	B	Z	A	B	L	H	L	H	H			
B				A		B		H		H		H			
A				B		A		L		L		H			
								H		H		L			
								L		L		H			
	L		L		H			L		L		H			
			L					L		L		H			
			L					L		H		L			
			L					H		H		H			
	Z		Z	A	Z				L	L					
	Z		Z		Z				H	H	L				
	Z		Z		Z				L	L	H				
	L		H		H				L	L	H				
A	H	A	H		H				L	L	H				
A	H		H		H				H	H	L				
B	Z		Z		Z	B					H				
		B		B		A									
		B		B		A									
A		B		B		A									
Z		Z		Z		H									
X		X		X		X									
Z		Z		Z		Z									
A		B		B		B							L		
A						A							H		
A						B							L		
B						A						L	H		
B				A								H			
A				A											
A		Z		Z		Z									
Z		X		X		X									

TABLE III. Group A inspection

Terminal conditions (pins not designated may

Subgroup	Symbol	MIL-STD-883 method	Pin	1	2	3	4	5	6	7	8	9	10	11	12	13	14
			Test No.	$\overline{STSTB}$	HLDA	$\overline{WR}$	DBIN	DB_4	D_4	DB_7	D_7	DB_3	D_3	DB_2	D_2	DB_0	GND
7	Functional tests	3014	229	A	B	B	B	Z	Z	Z	Z	Z	Z	Z	Z	Z	GND
T_C=25°C			230	B					B		A		B		A		
			231										B		B		
			232										A				
			233			A							A				
			234										B				
			235								B						
			236												A		
			237														
			238		A												
			239		B												
			240														
			241														
			242												B		
			243														
			244			B			A		A						
			245	A					A		A						
			246						Z		Z		Z		Z		
			247				A	A	H	A	H	A	H	A	H	A	
			248		A		A	A	H		H		H	A	H	A	
			249		B		A	A	H		H		H	A	H	A	
			250				B	B	Z		Z		Z	B	Z	B	
			251				B	A	Z	B	Z	B	Z	A	Z	A	
			252			A	A	B	L		L	B	L	B	L	B	
			253					A	H			A	H	A	H		
			254					B	L			B	L	A	H		
			255					B	L			A	H	A	H		
			256				B	Z	Z	Z	Z	Z	Z	Z	Z	Z	
			257	B				Z	B	Z	A	Z	A	Z	A	Z	
			258	B				Z	B	Z		Z	A	Z	A	Z	
			259	A				L	B	H		H	A	H	A	H	
			260					H	A	H		H	A	H	A	H	
			261			B		H	A	H		H	A	H	A	H	
			262					L	B	L	B	L	B	L	B	L	
			263		A			L	B	H	A	L	B	L	B	L	
			264					X	Z	X	Z	X	Z	X	Z	X	
			265				A		X	X	X	X	X	X	X	X	
			266				A		X	X	X	X	X	X	X	X	
			267		B		B		Z	X	Z	X	Z	X	Z	X	
			268	B		A		Z	B	Z	A	Z	B	Z	B	Z	
			269	A				L	B	H	A	L	B	L	B	H	
			270					X	Z	X	Z	X	Z	X	Z	X	
			271				A		X		X		X		X		
			272		A		B		Z		Z		Z		Z		
			273		A		A		X		X		X		X		
			274		B		B		Z		Z		Z		Z		
			275	B				Z	A	Z	A	Z	B	Z	A	Z	
			276	A				H	A	H	A	L	B	H	A	L	
			277					X	Z	X	Z	X	Z	X	Z	X	
			278				A		X		X		X		X		
			279		A		A		X		X		X		X		
			280		B		B		Z		Z		Z		Z		
			281	B	B		A	A	H	B	L	B	L	A	H	A	
			282		A			A	H	B	L	B	L	A	H	A	
			283		A			B	H	A	L	A	L	B	H	B	
			284		B			B	L	A	H	A	H	B	L	B	
			285		A			B	L	A	H	A	H	B	L	B	
			286		A			A	L	B	H	B	H	A	L	A	
			287		B			A	H		L		L	A	H		
			288					B	L		L		L	B	L		
			289	A				B	L		L		L	B	L		

See footnotes at end of table.

for device type 01 -Continued.
be high ≥2.0 V, low ≤0.7 V, or open).

15	16	17	18	19	20	21	22	23	24	25	26	27	28	Measured terminal	Test limits		Unit
D_0	DB_1	D_1	DB_5	D_5	DB_6	D_6	$\overline{BUSEN}$	$\overline{INTA}$	$\overline{MEMR}$	$\overline{I/OR}$	$\overline{MERW}$	$\overline{I/OW}$	V_{CC}		Min	Max	
Z	Z	Z	Z	Z	Z	Z	B	H	H	H	H	H	V_{CC}	All outputs	See 2/ through 6/		
B	↓	B	↓	B	↓	A	↓	↓	↓	↓	H	↓	↓	↓			
↓	↓	B	↓	↓	↓	A	↓	↓	↓	↓	L	↓	↓	↓			
↓	↓	A	↓	↓	↓	B	↓	↓	↓	↓	H	↓	↓	↓			
↓	↓	↓	↓	↓	↓	↓	↓	↓	L	↓	↓	↓	↓	↓			
↓	↓	↓	↓	↓	↓	↓	↓	↓	H	↓	↓	↓	↓	↓			
A	↓	B	↓	↓	↓	↓	↓	L	↓	↓	↓	↓	↓	↓			
B	↓	B	↓	↓	↓	↓	↓	H	↓	↓	↓	↓	↓	↓			
B	↓	A	↓	↓	↓	↓	↓	H	↓	↓	↓	↓	↓	↓			
A	↓	↓	↓	↓	↓	↓	↓	H	↓	↓	↓	↓	↓	↓			
A	↓	↓	↓	A	↓	↓	↓	L	↓	↓	↓	↓	↓	↓			
A	↓	↓	↓	B	↓	↓	↓	L	↓	↓	↓	↓	↓	↓			
B	↓	↓	↓	B	↓	↓	↓	L	↓	↓	↓	↓	↓	↓			
↓	↓	↓	↓	B	↓	A	↓	H	↓	L	↓	↓	↓	↓			
↓	↓	↓	↓	A	↓	A	↓	↓	↓	H	↓	L	↓	↓			
↓	↓	↓	↓	A	↓	A	↓	↓	↓	H	↓	↓	↓	↓			
Z	↓	Z	↓	Z	↓	Z	↓	↓	↓	H	↓	↓	↓	↓			
H	A	H	A	H	A	H	↓	↓	L	L	↓	↓	↓	↓			
H	↓	H	↓	H	A	H	↓	↓	H	H	↓	↓	↓	↓			
H	↓	H	↓	H	A	H	↓	↓	L	L	↓	↓	↓	↓			
Z	↓	Z	↓	Z	B	Z	A	Z	Z	Z	Z	Z	↓	↓			
Z	B	Z	B	Z	A	Z	A	Z	Z	Z	Z	Z	↓	↓			
L	B	L	B	L	B	L	B	H	L	L	H	H	↓	↓			
↓	B	L	A	H	↓	↓	↓	↓	↓	↓	↓	↓	↓	↓			
↓	A	H	B	L	↓	↓	↓	↓	↓	↓	↓	↓	↓	↓			
↓	A	H	B	L	↓	↓	↓	↓	↓	↓	↓	↓	↓	↓			
Z	Z	Z	Z	Z	Z	Z	↓	↓	H	H	↓	↓	↓	↓			
A	Z	B	Z	A	Z	B	↓	L	H	H	↓	↓	↓	↓			
↓	Z	B	Z	↓	Z	B	A	Z	Z	Z	Z	Z	↓	↓			
↓	L	B	H	↓	L	B	B	L	H	H	H	H	↓	↓			
↓	H	A	H	↓	H	A	↓	L	↓	↓	H	↓	↓	↓			
↓	H	A	H	↓	H	A	↓	H	↓	↓	L	↓	↓	↓			
B	L	B	L	B	L	B	↓	↓	↓	↓	↓	↓	↓	↓			
B	H	A	H	A	H	A	↓	↓	↓	↓	↓	↓	↓	↓			
Z	X	Z	X	Z	X	Z	↓	↓	↓	↓	↓	↓	↓	↓			
X	↓	X	↓	X	↓	X	↓	↓	↓	↓	↓	↓	↓	↓			
X	↓	X	↓	X	↓	X	A	Z	Z	Z	Z	Z	↓	↓			
Z	↓	Z	↓	Z	↓	Z	B	H	H	H	L	H	↓	↓			
Z	Z	B	Z	A	Z	A	↓	L	↓	L	H	↓	↓	↓			
A	L	B	H	A	H	A	↓	↓	↓	↓	↓	↓	↓	↓			
Z	X	Z	X	Z	X	Z	↓	↓	↓	↓	↓	↓	↓	↓			
X	↓	X	↓	X	↓	X	↓	↓	↓	↓	↓	↓	↓	↓			
Z	↓	Z	↓	Z	↓	Z	↓	H	↓	H	↓	↓	↓	↓			
X	↓	X	↓	X	↓	X	↓	↓	↓	↓	↓	↓	↓	↓			
Z	↓	Z	↓	Z	↓	Z	↓	↓	↓	↓	↓	↓	↓	↓			
B	Z	B	Z	A	Z	B	↓	↓	L	↓	↓	↓	↓	↓			
B	L	B	H	A	L	B	↓	↓	↓	↓	↓	↓	↓	↓			
Z	X	Z	X	Z	X	Z	↓	↓	↓	↓	↓	↓	↓	↓			
X	↓	X	↓	X	↓	X	↓	↓	↓	↓	↓	↓	↓	↓			
X	↓	X	↓	X	↓	X	↓	↓	H	↓	↓	↓	↓	↓			
Z	↓	Z	↓	Z	↓	Z	↓	↓	H	↓	↓	↓	↓	↓			
H	B	L	B	L	A	H	A	Z	Z	Z	Z	Z	↓	↓			
H	B	L	B	L	A	H	↓	↓	↓	↓	↓	↓	↓	↓			
H	A	L	A	L	B	H	↓	↓	↓	↓	↓	↓	↓	↓			
L	A	H	A	H	B	L	↓	↓	↓	↓	↓	↓	↓	↓			
L	A	H	A	H	B	L	↓	↓	↓	↓	↓	↓	↓	↓			
L	B	H	B	H	A	L	↓	↓	↓	↓	↓	↓	↓	↓			
H	↓	L	↓	L	A	H	↓	↓	↓	↓	↓	↓	↓	↓			
H	↓	L	↓	L	B	L	↓	↓	↓	↓	↓	↓	↓	↓			
H	↓	L	↓	L	B	L	↓	↓	↓	↓	↓	↓	↓	↓			

TABLE III. Group A inspection
Terminal conditions (pins not designated may

Subgroup	Symbol	MIL-STD-883 method	Pin / Test No.	1 / $\overline{STSTB}$	2 / HLDA	3 / $\overline{WR}$	4 / DBIN	5 / DB_4	6 / D_4	7 / DB_7	8 / D_7	9 / DB_3	10 / D_3	11 / DB_2	12 / D_2	13 / DB_0	14 / GND
7	Funct-	3014	290	A	B	A	B	Z	Z	Z	Z	Z	Z	Z	Z	Z	GND
T_C=25°C	ional		291					Z	B	Z	A	Z	A	Z	B	Z	
	tests		292					Z	A	Z	B	Z	B	Z	A	Z	
			293					A	Z	B	Z	B	Z	A	Z	A	
			294					B	Z	A	Z	A	Z	B	Z	B	
			295				A		L	B	L	B	L		L		
			296				A		H	B	H	B	H		H		
			297	B			A		L	B	L	B	L		L		
8	Repeat subgroup 7 at T_C = -55°C and T_C = 125°C.																
9	t_{PHL1}	3003	298	IN-M	4.5 V	4.5 V	IN-K								IN-C		GND
T_C=25°C			299	IN-M	4.5 V	4.5 V	IN-K				IN-C		IN-B		IN-B		
			300	IN-M	4.5 V	4.5 V	IN-K								IN-B		
	t_{PLH2}		301	IN-A	GND		IN-D								GND		
			302		GND		IN-D				IN-C		IN-B				
			303		GND		IN-D										
	t_{PLH3}		304		IN-E		4.5 V										
			305		IN-E		4.5 V				IN-C		IN-B				
			306		IN-E		4.5 V										
	t_{PHL4}		307			IN-F			IN-B								
	2/		308						IN-C								
	t_{PLH4}		309						IN-B								
			310						IN-C								
	t_{PHZ1}		311		GND		IN-G	4.5 V	OUT								
			312							4.5 V	OUT						
			313									4.5 V	OUT				
			314											4.5 V	OUT		
			315													4.5 V	
			316														
			317														
			318														
	t_{PZH1}		319					4.5 V	OUT								
			320							4.5 V	OUT						
			321									4.5 V	OUT				
			322											4.5 V	OUT		
			323													4.5 V	
			324														
			325														
			326														
	t_{PLZ1}		327					GND	OUT								
			328							GND	OUT						
			329									GND	OUT				
			330											GND	OUT		
			331													GND	
			332														
			333														
			334														
	t_{PZL1}		335					GND	OUT								
			336							GND	OUT						
			337									GND	OUT				
			338											GND	OUT		
			339													GND	
			340														
			341														
			342														

See footnotes at end of table.

for device type 01 -Continued.
be high ≥2.0 V, low ≤0.7 V, or open).

15	16	17	18	19	20	21	22	23	24	25	26	27	28	Measured terminal	Test limits Min	Test limits Max	Unit
D_0	DB_1	D_1	DB_5	D_5	DB_6	D_6	$\overline{BUSEN}$	$\overline{INTA}$	$\overline{MEMR}$	$\overline{I/OR}$	$\overline{MERW}$	$\overline{I/OW}$	V_{CC}				
Z	Z	Z	Z	Z	Z	Z	A	Z	Z	Z	Z	Z	V_{CC}	All outputs	See 2/ through 6/		
B	Z	A	Z	A	Z	B											
A	Z	B	Z	B	Z	A											
Z	B	Z	B	Z	A	Z											
Z	A	Z	A	Z	B	Z											
L	B	L	B	L		L											
H		H	B	H		H		+12 V									
L		L	B	L		L		+12 V									
IN-C		IN-B		IN-C		IN-B	GND	OUT					5.0 V	23	20	75	ns
IN-B		IN-B		IN-B		IN-C			OUT	OUT				24		75	
						IN-C								25		75	
IN-C				IN-C				OUT						23		35	
IN-B									OUT	OUT				24		35	
						IN-C								25		35	
IN-C								OUT						23		28	
IN-B									OUT	OUT				24		28	
						IN-C								25		28	
		GND									OUT			26	5	60	
												OUT		27			
		GND									OUT			26			
												OUT		27			
OUT							4.5 V							6		45	
	4.5 V	OUT	4.5 V	OUT	4.5 V	OUT								8			
														10			
														12			
														15			
														17			
														19			
														21			
OUT														6			
	4.5 V	OUT	4.5 V	OUT	4.5 V	OUT								8			
														10			
														12			
														15			
														17			
														19			
														21			
OUT														6			
	GND	OUT	GND	OUT	GND	OUT								8			
														10			
														12			
														15			
														17			
														19			
														21			
OUT														6			
	GND	OUT	GND	OUT	GND	OUT								8			
														10			
														12			
														15			
														17			
														19			
														21			

TABLE III. Group A inspection
Terminal conditions (pins not designated may

Subgroup	Symbol	MIL-STD-883 method	Pin / Test No.	1 / $\overline{STSTB}$	2 / HLDA	3 / $\overline{WR}$	4 / DBIN	5 / DB_4	6 / D_4	7 / DB_7	8 / D_7	9 / DB_3	10 / D_3	11 / DB_2	12 / D_2	13 / DB_0	14 / GND
9 T_C = 25°C	t_{PZH2}	3003	343	IN-M			GND	OUT	4.5 V	OUT	4.5 V						GND
			344									OUT	4.5 V				
			345											OUT	4.5 V		
			346													OUT	
			347														
			348														
			349												GND		
			350														
	t_{PZL2}		351					OUT									
			352						GND	OUT							
			353								GND	OUT					
			354										GND	OUT			
			355												GND	OUT	
			356														
			357														
			358														
	t_{PZH3} 2/			C 1/ 4.5 V				OUT	4.5 V								
			359							OUT	4.5 V						
			360									OUT	4.5 V				
			361											OUT	4.5 V		
			362													OUT	
			363														
			364														
			365														
			366														
	t_{PHZ3} 2/			C 1/ 4.5 V				OUT	4.5 V								
			367							OUT	4.5 V						
			368									OUT	4.5 V				
			369											OUT	4.5 V		
			370													OUT	
			371														
			372														
			373														
			374														
	t_{PZL3} 2/			C 1/ 4.5 V				OUT	GND								
			375							OUT	GND						
			376									OUT	GND				
			377											OUT	GND		
			378													OUT	
			379														
			380														
			381														
			382														
	t_{PLZ3} 2/			C 1/ 4.5 V				OUT	GND								
			383							OUT	GND						
			384									OUT	GND				
			385											OUT	GND		
			386													OUT	
			387														
			388														
			389														
			390														
	t_{PHL5}		391		GND		4.5 V	IN-H	OUT								
			392							IN-H	OUT						
			393									IN-H	OUT				
			394											IN-H	OUT		
			395													IN-H	
			396														
			397														
			398														

See footnotes at end of table.

for device type 01 -Continued.
be high ≥2.0 V, low ≤0.7 V, or open).

15	16	17	18	19	20	21	22	23	24	25	26	27	28	Measured terminal	Test limits		Unit
D_0	DB_1	D_1	DB_5	D_5	DB_6	D_6	$\overline{BUSEN}$	$\overline{INTA}$	$\overline{MEMR}$	$\overline{I/OR}$	$\overline{MERW}$	$\overline{I/OW}$	V_{CC}		Min	Max	
4.5 V	OUT	4.5 V	OUT	4.5 V	OUT	GND 4.5 V	GND						5.0 V	5 7 9 11 13 16 18 20		36	ns
GND	OUT	GND	OUT	GND	OUT	GND								5 7 9 11 13 16 18 20			
4.5 V	OUT	GND 4.5 V	OUT	4.5 V	OUT	GND 4.5 V	IN-H						5.0 V	- 5 7 9 11 13 16 18 20	-	- 35	- ns
4.5 V	OUT	GND 4.5 V	OUT	4.5 V	OUT	GND 4.5 V	IN-H						5.0 V	- 5 7 9 11 13 16 18 20	-	- 35	- ns
GND	OUT	GND GND	OUT	GND	OUT	GND GND	IN-H						5.0 V	- 5 7 9 11 13 16 18 20	-	- 35	- ns
GND	OUT	GND GND	OUT	GND	OUT	GND GND	IN-H						5.0 V	- 5 7 9 11 13 16 18 20	-	- 35	- ns
OUT	IN-H	OUT	IN-H	OUT	IN-H	OUT	4.5 V							6 8 10 12 15 17 19 21		45	ns

TABLE III. Group A inspection
Terminal conditions (pins not designated may

Subgroup	Symbol	MIL-STD-883 method	Case Test No.	1 $\overline{STSTB}$	2 HLDA	3 $\overline{WR}$	4 DBIN	5 DB_4	6 D_4	7 DB_7	8 D_7	9 DB_3	10 D_3	11 DB_2	12 D_2	13 DB_0	14 GND
9 T_C = 25°C	t_{PLH5}	3003	399		GND		4.5 V	IN-H	OUT	IN-H	OUT	IN-H	OUT	IN-H	OUT	IN-H	GND
			400														
			401														
			402														
			403														
			404														
			405														
			406														
	t_{PHL6}		407	C 1/ 4.5 V			GND	OUT	IN-H	OUT	IN-H	OUT	IN-H	OUT	IN-H	OUT	GND
			408														
			409														
			410														
			411														
			412														
			413														
			414														
	t_{PLH6}		415	C 1/ 4.5 V			GND	OUT	IN-H	OUT	IN-H	OUT	IN-H	OUT	IN-H	OUT	GND
			416														
			417														
			418														
			419														
			420														
			421														
			422														
10	Same tests, terminal conditions, and limits as for subgroup 9, except T_C = 125°C.																
11	Same tests, terminal conditions, and limits as for subgroup 9, except T_C = -55°C.																

1/ C = 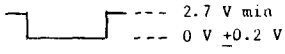
--- 2.7 V min
--- 0 V ±0.2 V

2/ The tests in subgroups 7 and 8 shall be run in sequence.
3/ Input voltages: A = 2.0 V; B = 0.8 V.
4/ Output voltages: H = 3.3 V for D_0 - D_7 only; H = 2.4 V for all other outputs; L = 0.5 V for all outputs.
5/ X = Don't care.
6/ Z = High impedance state. It must be checked at every data point noted in subgroup 7:
a. A forcing voltage and resulting current for outputs D_2 and D_6 must meet the following:

Forcing voltage	Limit for resulting current
0.4 V	-750 µA max
5.5 V	100 µA max

b. For all other high impedance outputs (excluding D_2 and D_6) either of the two test procedures may be followed:
1. A forcing voltage and the resulting current must meet the following:

Pins	Forcing voltage	Limit for resulting current
DB_0-DB_7; D_0; D_1; D_3-D_5; D_7	0.4 V	-250 µA max
DB_0-DB_7	5.5 V	20 µA max
D_0;D_1;D_3-D_5;D_7	5.5 V	100 µA max

2. A load as shown below is connected to the output. The output voltage shall be measured from 70 µs to 100 µs after the high impedance control line is enabled. the resultant voltage at the output pin shall be: 1.0 V $\leq V_{OUT} \leq$ 2.0 V.

for device type 01 -Continued.
be high ≥2.0 V, low ≤0.7 V, or open).

15	16	17	18	19	20	21	22	23	24	25	26	27	28	Measured terminal	Test limits		Unit
D_0	DB_1	D_1	DB_5	D_5	DB_6	D_6	$\overline{BUSEN}$	$\overline{INTA}$	$\overline{MEMR}$	$\overline{I/O_R}$	$\overline{MERW}$	$\overline{I/O_W}$	V_{CC}		Min	Max	
OUT	IN-H	OUT	IN-H	OUT	IN-H	OUT	4.5 V						5.0 V	6 8 10 12 15 17 19 21		45	ns
IN-H	OUT	GND IN-H	OUT	IN-H	OUT	GND IN-H	GND						5.0 V	- 5 7 9 11 13 16 18 20	- 5	- 40	- ns
IN-H	OUT	GND IN-H	OUT	IN-H	OUT	GND IN-H	GND						5.0 V	- 5 7 9 11 13 16 18 20	- 5	- 40	- ns

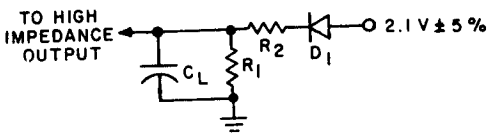

Output	R_1	R_2
D_0, D_1, D_3-D_5, D_7	332 kΩ ±5%	536Ω ±5%
DB_0 - DB_7	237 kΩ ±5%	105Ω ±5%

D_1 = 1N3064, or equivalent.
C_L = 40 ±5 pF (includes tester, wiring, probe, and lead capacitance).

4.4 Quality conformance inspection. Quality conformance inspection shall be in accordance with MIL-M-38510. Inspections to be performed shall be those specified in method 5005 of MIL-STD-883 and herein for groups A, B, C, and D inspections (see 4.4.1 through 4.4.4). Generic test data (see 6.6) may be used to satisfy the requirements for group C and D inspections. Quality conformance inspection shall be completed on the specific devices covered by this specification before they are shipped.

4.4.1 Group A inspection. Group A inspection shall be in accordance with table I of method 5005 of MIL-STD-883 and as follows:

a. Tests shall be as specified in table II herein.
b. Subgroups 4, 5, 6, and 8 of table 1 of method 5005 of MIL-STD-883 shall be omitted.
c. Subgroup 1 (C_{IN}, C_{OUT}, $C_{I/O}$ measurement) shall be performed only after process or design changes which may affect design capacitance.

4.4.2 Group B inspection. Group B inspection shall be in accordance with table II of method 5005 of MIL-STD-883. Electrical parameters shall be as specified in table II herein.

4.4.3 Group C inspection. Group C inspection shall be in accordance with table III of method 5005 of MIL-STD-883 and as follows:

a. End point electrical parameters shall be as specified in table II herein.
b. Subgroups 3 and 4 shall be added to the group C inspection requirements for class B devices and shall consist of the tests, conditions, and limits specified for subgroups 10 and 11 of group A.
c. Steady-state life-test (method 1005 of MIL-STD-883) conditions.
   1. Test condition D or E, using the circuit shown on figure 4, or equivalent.
   2. T_A = 125°C, minimum.
   3. Test duration: 1,000 hours, except as permitted by appendix B of MIL-M-38510.

4.4 Group D inspection. Group D inspection shall be in accordance with table IV of method 5005 of MIL-STD-883. End point electrical parameters shall be as specified in table II herein.

4.5 Methods of inspection. Methods of inspection shall be specified as follows:

4.5.1 Voltage and current. All voltages given are referenced to the microcircuit ground terminal. Currents given are conventional and positive when flowing into the referenced terminal.

5. PACKAGING

5.1 Packaging requirements. The requirements for packaging shall be as specified in MIL-M-38510.

6. NOTES

6.1 Notes. The notes specified in MIL-M-38510 are applicable to this specification.

6.2 Intended use. Microcircuits conforming to this specification are intended for logistic support of existing equipment.

6.3 Ordering data. The contract or purchase order should specify the following:

a. Complete part number (see 1.2).
b. Requirements for delivery of one copy of the quality conformance inspection data pertinent to the device inspection lot to be supplied with each shipment by the device manufacturer, if applicable.
c. Requirements for certificate of compliance, if applicable.
d. Requirements for notification of change of product or process to contracting activity if applicable.
e. Requirements for packaging and packing.
f. Requirements for special carriers, lead lengths or lead forming, if applicable. These requirements shall not affect the part number. Unless otherwise specified, these requirements will not apply to direct purchase by or direct shipment to the Government.

6.4 Abbreviations, symbols, and definitions. The abbreviations, symbols, and definitions used herein are defined in MIL-M-38510, MIL-STD-1331, and as follows:

GND- - - - - - - - - - - - - Electrical ground (common terminal)
V_{IN}- - - - - - - - - - - - - Voltage level at an input terminal
F_{OSC}- - - - - - - - - - - - - Oscillating frequency

6.5 Logistic support. Lead materials and finishes (see 3.3) are interchangeable. Unless otherwise specified, microcircuits acquired for Government logistic support will be acquired to device class B (see 1.2.2), and lead material and finish C (see 3.3). Longer length leads and lead forming shall not affect the part number.

6.6 Generic test data. Generic test data may be used to satisfy the requirements of 4.4.3. Group C generic test data shall be on date codes no more than one year old and on a die in the same microcircuit group (See Appendix E of MIL-M-38510) with the same material, design and process and from the same plant as the die represented. Group D generic data (see 4.4.4) shall be on date codes no more than one year old and on the same package type (see terms, definitions and symbols of MIL-M-38510) and from the same plant as the package represented. The vendor is required to retain the generic data for a period of not less than 36 months from the date of shipment.

6.7 Substitutability. The cross-reference information below is presented for the convenience of users. Microcircuits covered by this specification will functionally replace the listed generic-industry type. Generic-industry microcircuit types may not have equivalent operational performance characteristics across military temperature ranges or reliability factors equivalent to MIL-M-385310 device types and may have slight physical variations in relation to case size. The presence of this information shall not be deemed as permitting substitution of generic-industry types for MIL-M-38510 types or as a waiver of any of the provisions of MIL-M-38510.

Military device type	Generic-industry type
01	8228

6.8 Ordering guidance. Since the qualification and certification requirements have been removed from the specification, orders may be placed immediately.

6.9 Changes from previous issue. Asterisks are not used in this revision to identify changes with respect to the previous issue due to the extensiveness of the changes.

Custodians:
Army - ER
Navy - EC
Air Force - 17

Review activities:
Army - AR, MI
Air Force - 11, 19, 85, 99
Navy - OS, SH
DLA - ES

User activities:
Army - SM
Navy - AS, CG, MC

Agent:
DLA - ES

Preparing activity:
Air Force - 17

(Project 5962-0603-6)