QUALIFICATION REQUIREMENTS REMOVED

MIL-M-38510/421A
9 August 1983
SUPERSEDING
MIL-M-38510/421(USAF)
21 March 1979

MILITARY SPECIFICATION

MICROCIRCUITS, DIGITAL, SCHOTTKY TLL, INPUT/OUTPUT PORT WITH THREE-STATE OUTPUT, MONOLITHIC SILICON

INACTIVE FOR NEW DESIGN AFTER DATE OF THIS REVISION

This specification is approved for use by all Departments and Agencies of the Department of Defense.

1. SCOPE

1.1 Scope. This specification covers the detail requirements for a monolithic silicon, Schottky TTL, input/output port with three-state output microcircuits. One product assurance class and a choice of case outlines and lead finishes are provided and are reflected in the complete part number.

1.2 Part number. The complete part number shall be in accordance with MIL-M-38510 with the exception that the "JAN" or "J" certification mark shall not be used.

1.2.1 Device type. The device type shall be as follows:

Device type	Circuit
01	8-bit input/output port

1.2.2 Device class. The device class shall be the product assurance level as defined in MIL-M-38510.

1.2.3 Case outline. The case outline shall be designated as follows:

Letter	Case outline, (see MIL-M-38510, appendix C)
J	D-3 (24-lead, 1/2" x 1-1/4"), dual-in-line package
K	F-6 (24-lead, 3/8" x 5/8"), flat package

1.3 Absolute maximum ratings.

Current into outputs	125 mA
Output and supply voltage range	-0.5 V dc to +7.0 V dc
Input voltage range	-1.0 V dc to +5.5 V dc
Storage temperature range	-65°C to +150°C
Maximum power dissipation (P_D) 1/	0.8 W
Lead temperature (soldering 10 seconds)	300°C
Thermal resistance, junction to case (θ_{JC}):	
Case J	0.08°C/mW
Case K	0.15°C/mW
Junction temperature (T_J)	175°C

1.4 Recommended operating conditions.

Supply voltage range	4.5 V dc minimum to 5.5 V dc maximum
Minimum high-level input voltage (V_{IH})	2.0 V dc
Maximum low-level input voltage (V_{IL})	0.8 V dc
Case operating temperature range (T_C)	-55°C to +125°C

1/ Must withstand the added P_D due to short circuit test, (e.g., I_{OS}).

Beneficial comments (recommendations, additions, deletions) and any pertinent data which may be of use in improving this document should be addressed to: Rome Air Development Center (RBE-2), Griffiss AFB, NY 13441, by using the self-addressed Standardization Document Improvement Proposal (DD Form 1426) appearing at the end of this document or by letter.

2. APPLICABLE DOCUMENTS

2.1 Government specifications and standards. Unless otherwise specified, the following specifications and standards, of the issue listed in that issue of the Department of Defense Index of Specifications and Standards specified in the solicitation, form a part of this specification to the extent specified herein.

SPECIFICATION

MILTARY

MIL-M-38510 - Microcircuits, General Specification For.

STANDARD

MILITARY

MIL-STD-883 - Test Methods and Procedures for Microelectronics.

(Copies of specifications, standards, handbooks, drawings, and publications required by manufacturers in connection with specific acquisition functions should be obtained from the contracting activity or as directed by the contracting officer.)

2.2 Order of precedence. In the event of a conflict between the text of this specification and the references cited herein, the text of this specification shall take precedence.

3. REQUIREMENTS

3.1 Detail specification. The individual item requirements shall be in accordance with MIL-M-38510 and as specified herein.

3.2 Design, construction, and physical dimensions. The design, construction, and physical dimensions shall be as specified in MIL-M-38510 and 1.2.3 herein.

3.2.1 Terminal connections. The terminal connections shall be as specified on figure 1.

3.2.2 Truth table. The truth table shall be as specified on figure 2.

3.2.3 Logic diagram. The logic diagram shall be as specified on figure 3.

3.2.4 Case outlines. The case outlines shall be as specified in 1.2.3.

3.3 Lead material and finish. The lead material and finish shall be in accordance with MIL-M-38510 (see 6.5).

3.4 Electrical performance characteristics. The electrical performance characteristics are as specified in table I, and apply over the full recommended case operating temperature range, unless otherwise specified.

3.5 Electrical test requirements. The electrical test requirements shall be the subgroups specified in table II. The electrical tests for each subgroup are described in table III.

3.6 Marking. Marking shall be in accordance with MIL-M-38510 and 1.2 herein. At the option of the manufacturer, the country of origin may be omitted from the body of the microcircuit, but shall be retained on the initial container. The "JAN" or "J" certification mark shall not be used.

3.7 Manufacturers eligibility. To be eligible to supply microcircuits to this specification a manufacturer shall have a manufacturer's certification in accordance with MIL-M-38510 for at least one line, not necessarily the line producing the device type described herein.

3.8 Certification. Certification in accordance with MIL-M-38510 is not required for this device.

TABLE I. Electrical performance characteristics.

Test	Symbol	Conditions	Limits Min	Limits Max	Unit
High-level output voltage	V_{OH}	V_{CC} = 4.5 Vdc; I_{OH} = -0.5 mA	3.4		V
Low-level output voltage	V_{OL}	V_{CC} = 4.5 Vdc; I_{OL} = 10 mA		0.45	V
Input clamp volatge	V_{IC}	V_{CC} = 4.5 V; I_{IN} - -5 mA		-1.2	V
Low level input current, STD, DS_2, CLR, DI_1-DI_8	I_{IL1}	V_{CC} = 5.5 V; V_{IN} = 0.45 V		-250	µA
Low level input current, MD	I_{IL2}	V_{CC} = 5.5 V; V_{IN} = 0.45 V		-750	µA
Low level input current, $\overline{DS}_1$	I_{IL3}	V_{CC} = 5.5 V; V_{IN} = 0.45 V		-1.0	mA
Input capacitance, $\overline{DS}_1$, MD	C_{I1}	V_{CC} = 5.0 V, F = 1.0 MHz, V_{BIAS} = 2.5 V		12	pF
Input capacitance, DS_2, STD, $\overline{CRL}$, DI_1-DI_8	C_{I2}			9	pF
Output capacitance, DO_1-DO_8	C_O			12	pF
High level input current STB, DS_2, $\overline{CLR}$, DI_1-DI_8	I_{IH1}	V_{CC} = 5.5 V; V_{IN} = 5.5 V		10	µA
High level input current MD	I_{IH2}	V_{CC} = 5.5 V; V_{IN} = 5.5 V		30	µA
High level input current DS	I_{IH3}	V_{CC} = 5.5 V; V_{IN} = 5.5 V		40	µA
Output leakage current low, high impedance state	I_{OZL}	V_{CC} = 5.5 V; V_{OUT} = 0.45 V		-20	µA
Output leakage current high, high impedance state	I_{OZH}	V_{CC} = 5.5 V; V_{OUT} = 5.5 V		20	µA
Short circuit output current	I_{OS}	V_{CC} = 5.5 V 1/	-15	-83	mA

1/ All unspecified inputs grounded.

TABLE I. Electrical performance characteristics - Continued.

Test	Symbol	Conditions	Limits Min	Limits Max	Unit
Supply current	I_{CC}	V_{CC} = 5.5 V		145	mA
Propagation delay time from DI_1-DI_8 to DO_1-DO_8	t_{PHL1} t_{PLH1}	V_{CC} = 5.0 V; (see load, figure 5)		40	ns
Propagation delay time from STB to DO_1-DO_8	t_{PHL2} t_{PLH2}			50	ns
Propagation delay time from STB to $\overline{INT}$	t_{PHL3}			55	ns
Propagation delay time from $\overline{DS_1}$, DS_2 to $\overline{INT}$	t_{PLH3}			35	ns
Propagation delay time from $\overline{DS_1}$ and DS_2 to DO_1-DO_8	t_{PHL4} t_{PLH4}			50	ns
Propagation delay time from $\overline{CLR}$ to DO_1-DO_8	t_{PHL5}			65	ns
Propagation delay time from $\overline{DS_1}$, DS_2, and MD to DO_1-DO_8	t_{PLZ1}			50	ns
Into high impedance state	t_{PHZ1}	V_{CC} = 5.0 V; (see load, figure 5 and 4.4.1)		50	ns
Out of high impedance state	t_{PZH1} t_{PZL1}	V_{CC} = 5.0 V; (see load, figure 5)		50	ns
Setup time, DI_1-DI_8 to STB, $\overline{DS_1}$ and DS_2	t_{SLH1} t_{SHL1}		20		ns
Hold time, DI_1-DI_8 to STB, $\overline{DS_1}$ and DS_2	t_{HHL1} t_{HLH1}		30		ns
Pulse width, STD, DS_2	t_{WH1}		40		ns
Pulse width, $\overline{DS_1}$, $\overline{CLR}$	t_{WL1}		40		ns

TABLE II. Electrical test requirements.

MIL-STD-883 test requirements	Subgroups (see table III) Class B devices
Interim electrical test parameters (pre burn-in) (method 5004)	1
Final electrical test parameters (method 5004)	*1,2,*3,7,9, 10,11
Group A test requirements (method 5005)	1,2,3,7,8,9, 10,11
Group C end-point electrical parameters (method 5005)	N/A
Group D end-point electrical parameters (method 5005)	1,2,3
Additional electrical subgroups for group C periodic inspections	N/A

*PDA applies to subgroup 1 (see 4.2c).

4. QUALITY ASSURANCE PROVISIONS

4.1 Sampling and inspection. Sampling and inspection procedures shall be in accordance with MIL-M-38510 and methods 5005 and 5007 of MIL-STD-883, as applicable, except as modified herein.

4.2 Screening. Screening shall be in accordance with method 5004 of MIL-STD-883, and shall be conducted on all devices prior to quality conformance inspection. The following additional criteria shall apply:

a. Burn-in test (method 1015 of MIL-STD-883).

(1) Test condition D or E, using the circuit shown on figure 4, or equivalent.

(2) T_A = +125°C minimum.

b. Interim and final electrical test parameters shall be as specified in table II, except interim electrical parameters test prior to burn-in is optional at the discretion of the manufacturer.

c. The percent defective allowable (PDA) for class B devices shall be 10 percent based on failures from group A, subgroup 1 test after cooldown as final electrical test in accordance with method 5004 of MIL-STD-883, and with no intervening electrical measurements. If interim electrical parameter tests are performed prior to burn-in, failures resulting from pre burn-in screening may be excluded from the PDA. If interim electrical parameter tests prior to burn-in are omitted, then all screening failures shall be included in the PDA. The verified failures of group A, subgroup 1, after burn-in, divided by the total number of devices submitted for burn-in in that lot, shall be used to determine the percent defective for that lot, and the lot shall be accepted or rejected based on the PDA for the applicable device class.

4.3 Qualification inspection. Qualification inspection is not required.

Device type 01

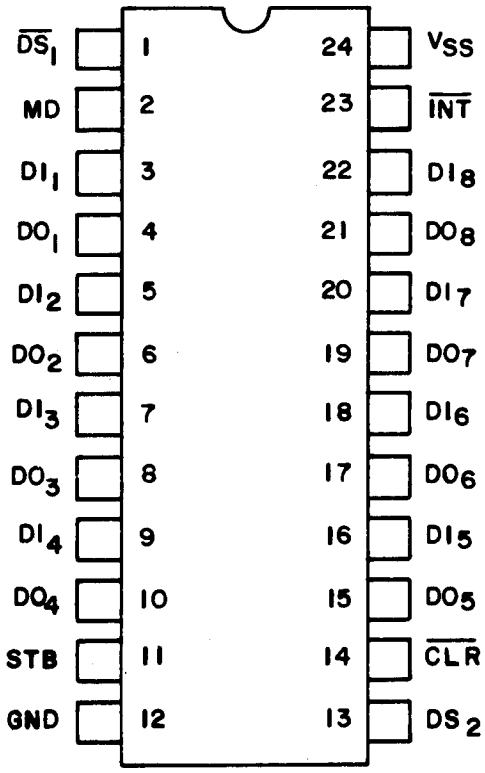

FIGURE 1. Terminal connections.

Device type 01

STB	MD	$\overline{DS}_1$ DS_2	Data Out Equals
0	0	0	3 State
1	0	0	3 State
0	1	0	Data latch
1	1	0	Data latch
0	0	1	Data latch
1	0	1	Data in
0	1	1	Data in
1	1	1	Data in

CLR	($\overline{DS}_1$ DS_2)	STB	*SR	INT
0	0	0	1	1
0	1	0	1	0
1	1	↘	0	0
1	1	0	1	0
1	0	0	1	1
1	1	↗	1	0

* Internal SR flip flop

CLR - Resets data latch
sets SR flip flop
(no effect on output buffer)

FIGURE 2. Truth table.

Device type 01

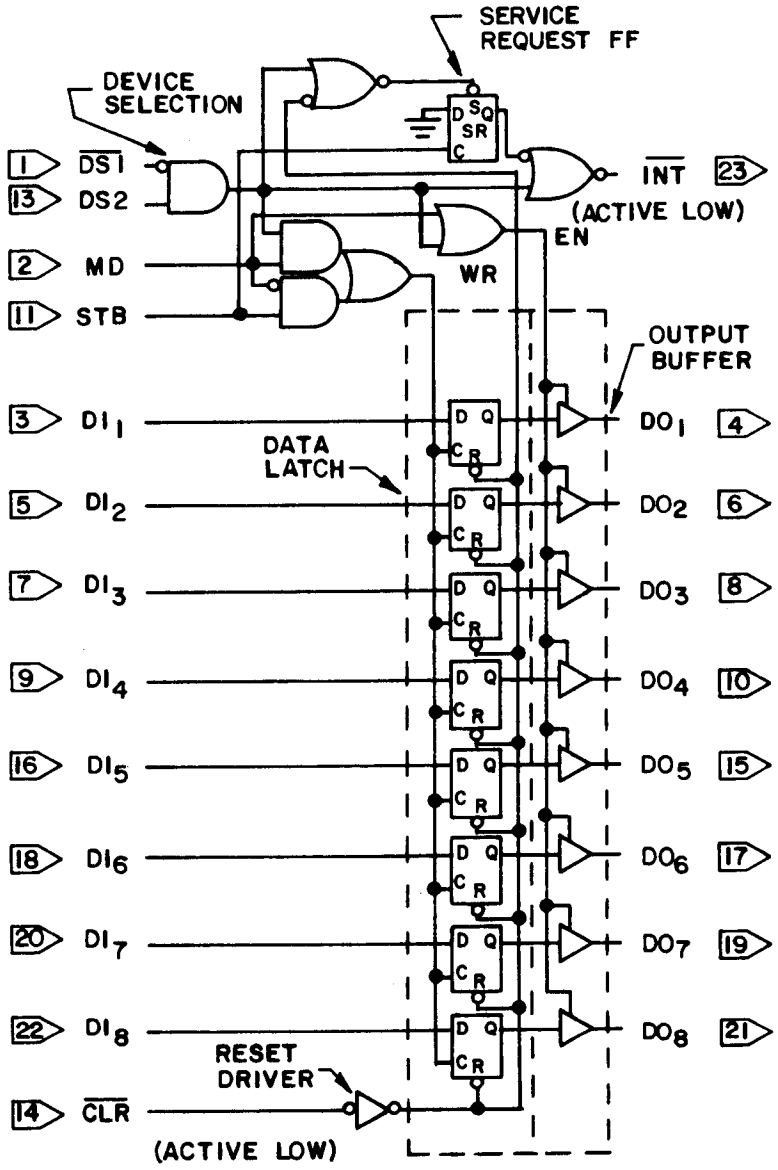

FIGURE 3. Logic diagram.

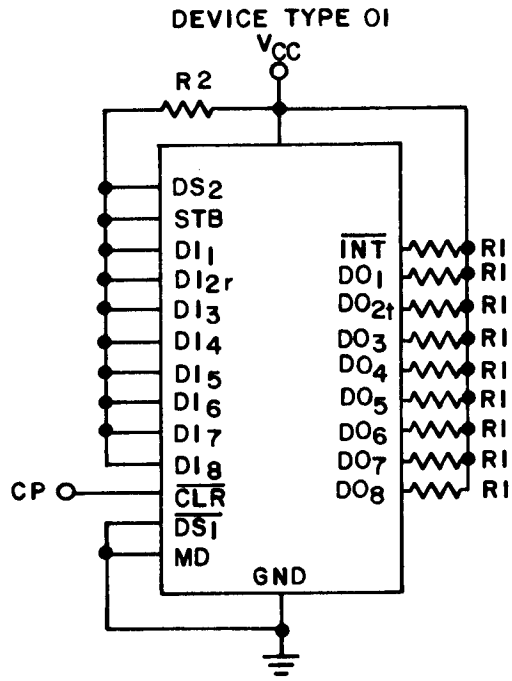

NOTES:
1. V_{CC} = 5.5 V.
2. R1 = 320Ω ±5%; R2 = 1 kΩ ±5%.
3. CP = 1 MHz ±50% square wave; duty cycle = 50 ±15%; V_{IH} = 2.0 V to 5.5 V ; V_{IL} = -0.5 V to 0.8 V.

FIGURE 4. Burn-in and life test circuit.

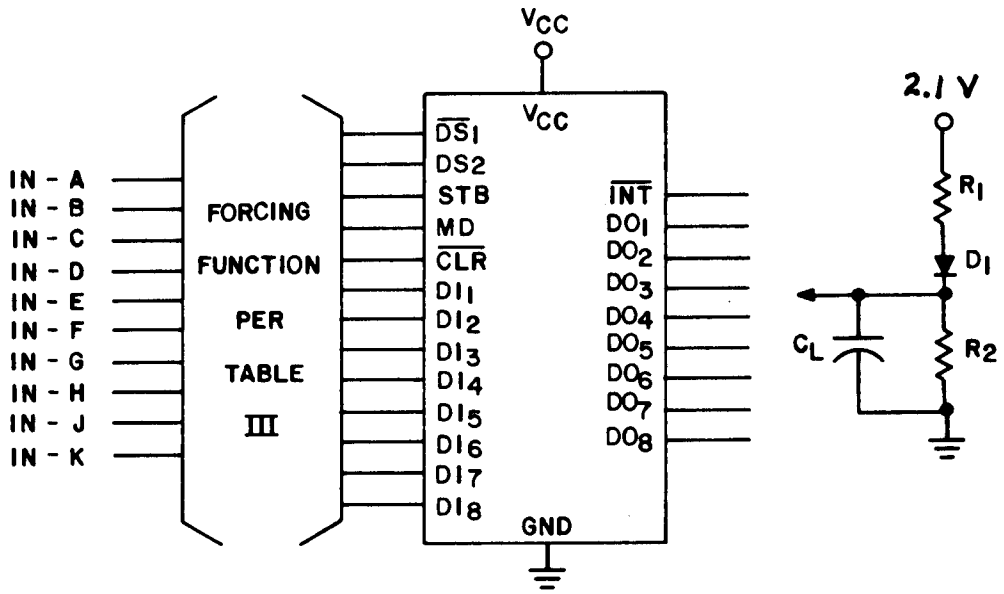

NOTES:
1. V_{CC} = 5.0 V.
2. D_1 = 1N3064 or equivalent
3. R_1 = 105Ω ±5%; R_2 = 6.8 kΩ ±5%.
4. C_L = 30 pF (capacitance loading greater than 30 pF is acceptable. For t_{PHZ}, C_L may equal 150 pF or greater).
5. All input waveforms have a PRR of≤1 MHz; rise time= fall time = 10 ns max.

FIGURE 5. Switching waveforms for device type 01.

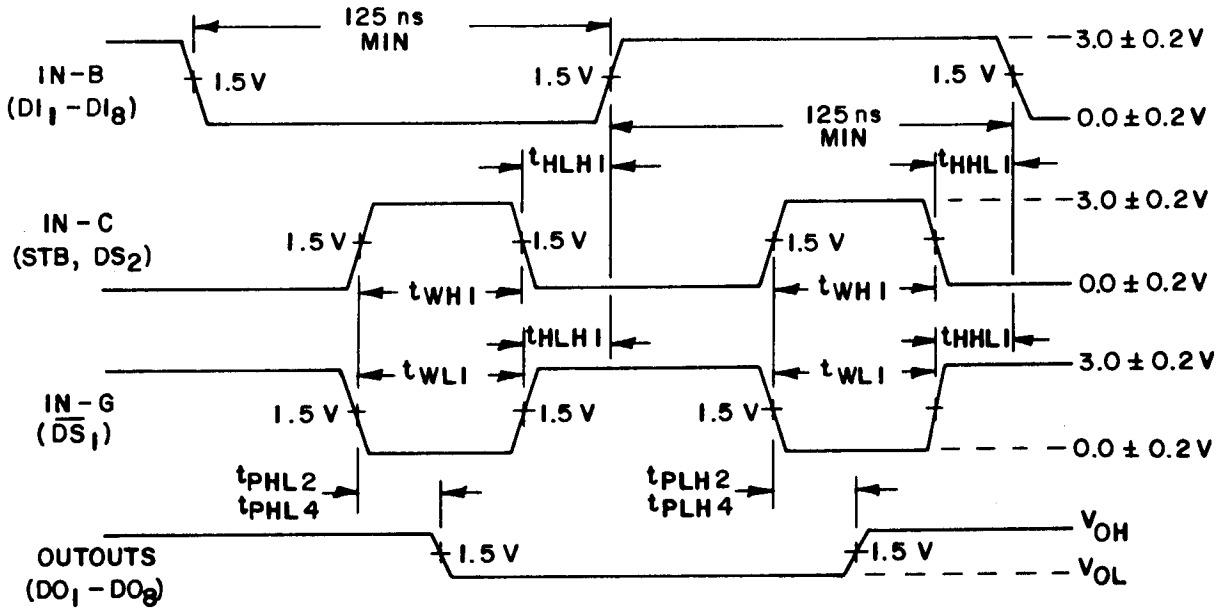

DELAY: STB, $\overline{DS_1}$ AND DS_2 TO DO_1 - DO_8

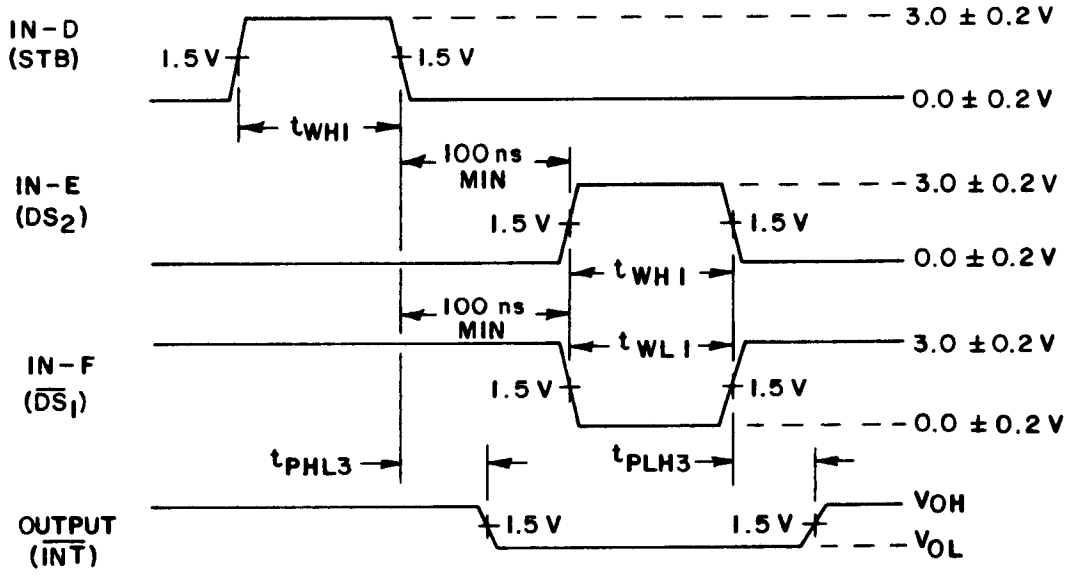

DELAY: STB TO $\overline{INT}$

NOTE: Hold times (t_{HLH1}, t_{HHL1}) and pulse widths (t_{WH1}, t_{WL1}) are defined in table I.

FIGURE 5. Switching waveforms - Continued.

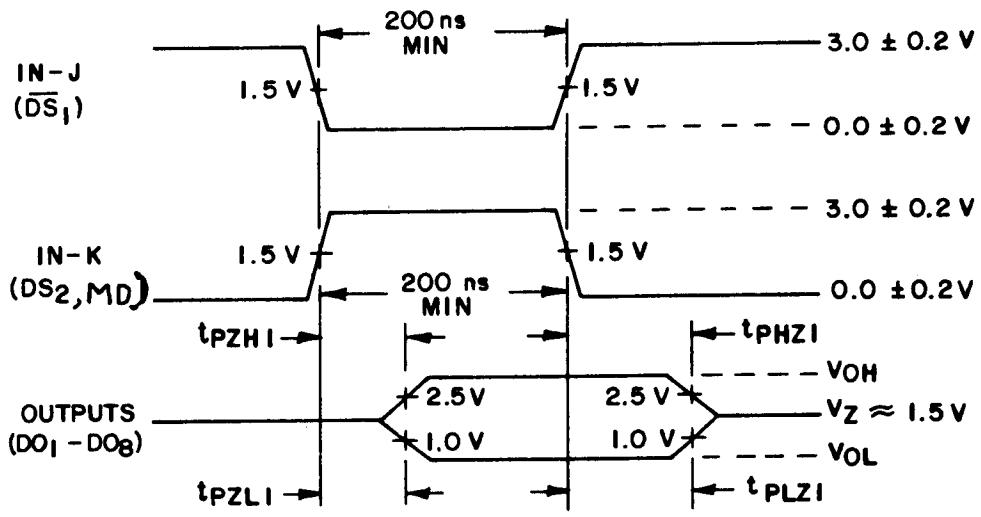

DELAY: $\overline{DS}_1$, DS_2 AND MD TO DO_1 - DO_8
HIGH IMPEDANCE STATE

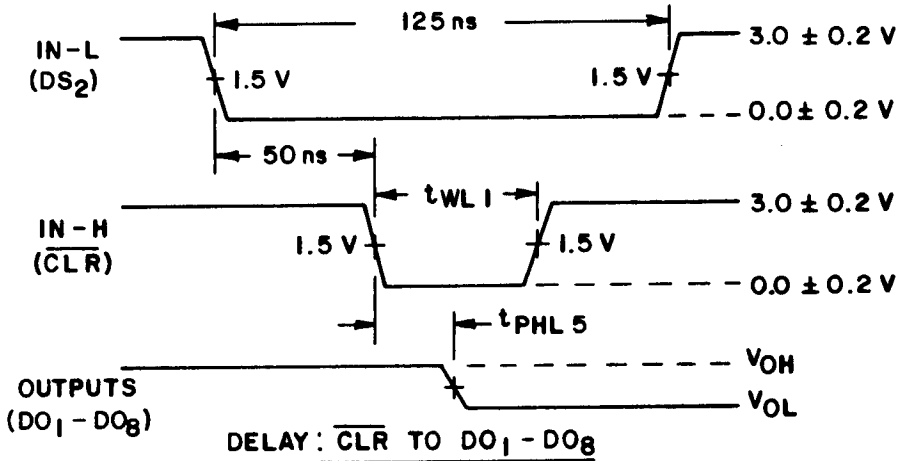

DELAY: $\overline{CLR}$ TO DO_1 - DO_8

NOTE: Pulse width (t_{WL1}) is defined in table I.

FIGURE 5. Switching waveforms - Continued.

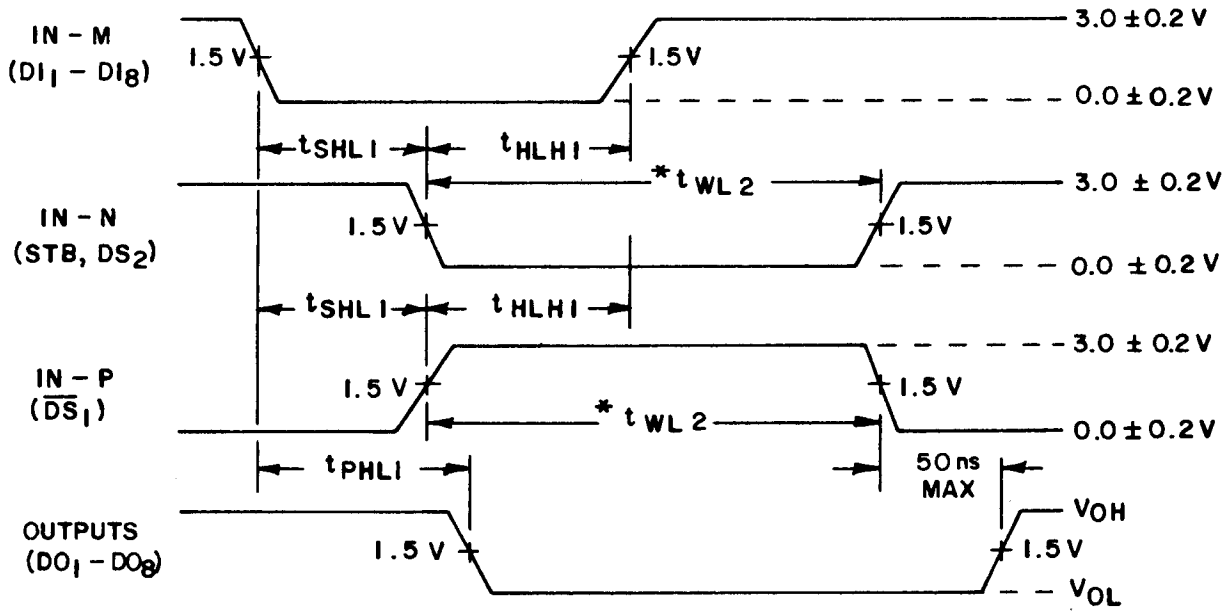

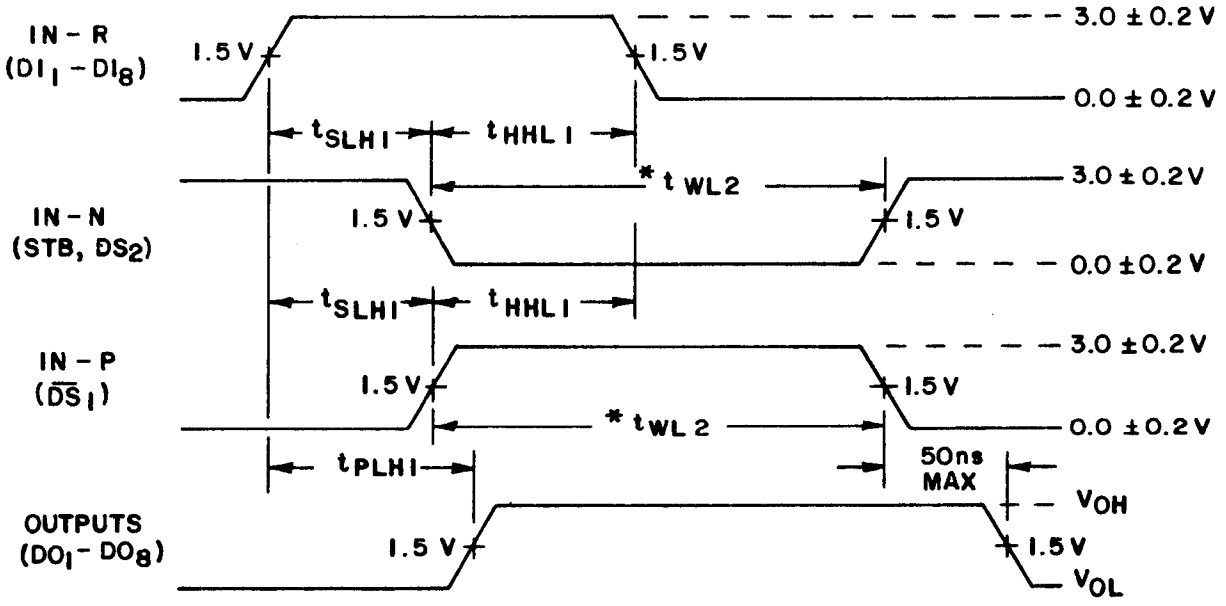

* t_{WL2} = 50ns MIN

DELAY: $DI_1 - DI_8$, $DO_1 - DO_8$ AND STB, $\overline{DS}_1$, DS_2

SETUP AND HOLD TIME CHECK

NOTE: Setup and hold times (t_{SHL1}, t_{SLH1}, t_{HLH1}, t_{HHL1}) are defined in table I.

FIGURE 5. Switching waveforms - Continued.

TABLE III. Group A inspection for device type 01.

Terminal conditions (pins not designated are open)

Subgroup	Symbol	MIL-STD-883 method	Cases J, K Test no.	1 $\overline{DS_1}$	2 MD	3 DI_1	4 DO_1	5 DI_2	6 DO_2	7 DI_3	8 DO_3	9 DI_4	10 DO_4	11 STB	12 GND	13 DS_2	14 $\overline{CLR}$	15 DO_5	16 DI_5	17 DO_6	18 DI_6	19 DO_7	20 DI_7	21 DO_8	22 DI_8	23 $\overline{TRT}$	24 V_{CC}	Meas. terminal	Test limits Min	Max	Unit
T_C = 25°C[1]	V_{OL}	3007	1	GND			10 mA								GND	4.5 V	GND										4.5 V	DO_1		0.45	V
			2						10 mA																			DO_2			
			3								10 mA																	DO_3			
			4										10 mA															DO_4			
			5															10 mA										DO_5			
			6																	10 mA								DO_6			
			7																			10 mA						DO_7			
			8																					10 mA				DO_8			
			9																							10 mA		$\overline{TRT}$			
	V_{OH}	3006	10		4.5 V	4.5 V	-.5 mA										4.5 V											DO_1	3.4		
			11					4.5 V	-.5 mA																			DO_2			
			12							4.5 V	-.5 mA																	DO_3			
			13									4.5 V	-.5 mA															DO_4			
			14															-.5 mA	4.5 V									DO_5			
			15																	-.5 mA	4.5 V							DO_6			
			16																			-.5 mA	4.5 V					DO_7			
			17																					-.5 mA	4.5 V			DO_8			
			18											GND		GND	GND									-.5 mA		$\overline{TRT}$			
	I_{IL1}	3009	19			.45 V																					5.5 V	DI_1		-250	μA
			20					.45 V																				DI_2			
			21							.45 V																		DI_3			
			22									.45 V																DI_4			
			23											.45 V														STB			
			24													.45 V												DS_2			
			25														.45 V											$\overline{CLR}$			
			26																.45 V									DI_5			
			27																		.45 V							DI_6			
			28																				.45 V					DI_7			
			29																						.45 V			DI_8			

See notes at end of table.

TABLE III. Group A inspection for device type 01 - Continued.

Terminal conditions (pins not designated are open)

Subgroup	Symbol	MIL-STD-883 method	Cases J, K Test no.	1 $\overline{DS_1}$	2 MD	3 DI_1	4 DO_1	5 DI_2	6 DO_2	7 DI_3	8 DO_3	9 DI_4	10 DO_4	11 STB	12 GND	13 DS_2	14 $\overline{CLR}$	15 DO_5	16 DI_5	17 DO_6	18 DI_6	19 DO_7	20 DI_7	21 DO_8	22 DI_8	23 $\overline{INT}$	24 V_{CC}	Meas. terminal	Test limits Min	Max	Unit
1	I_{IL2}	3009	30		.45 V										GND												5.5 V	MD		-750	μA
T_C = 25°C	I_{IL3}	3009	31	.45 V																								$\overline{DS_1}$		-1.0	mA
	I_{IH1}	3010	32			5.5 V																						DI_1		10	μA
			33					5.5 V																				DI_2			
			34							5.5 V																		DI_3			
			35									5.5 V																DI_4			
			36											5.5 V														STB			
			37													5.5 V												DS_2			
			38														5.5 V											$\overline{CLR}$			
			39																5.5 V									DI_5			
			40																		5.5 V							DI_6			
			41																				5.5 V					DI_7			
			42																						5.5 V			DI_8			
	I_{IH2}		43		5.5 V																							MD		30	
	I_{IH3}		44	5.5 V																								$\overline{DS_1}$		40	
	I_{OZL}		45		GND		.45 V									GND	GND											DO_1		-20	
			46						.45 V																			DO_2			
			47								.45 V																	DO_3			
			48										.45 V															DO_4			
			49															.45 V										DO_5			
			50																	.45 V								DO_6			
			51																			.45 V						DO_7			
			52																					.45 V				DO_8			
			53	4.5 V		4.5 V	.45 V							4.5 V			4.5 V											DO_1			
			54					4.5 V	.45 V																			DO_2			
			55							4.5 V	.45 V																	DO_3			
			56									4.5 V	.45 V															DO_4			
			57															.45 V	4.5 V									DO_5			
			58																	.45 V	4.5 V							DO_6			

See notes at end of table.

TABLE III. Group A inspection for device type 01 - Continued.

Terminal conditions (pins not designated are open)

Subgroup	Symbol	MIL-STD-883 method	Cases J, K, L Test no.	1 $\overline{DS}_1$	2 MD	3 DI_1	4 DO_1	5 DI_2	6 DO_2	7 DI_3	8 DO_3	9 DI_4	10 DO_4	11 STB	12 GND	13 $\overline{DS}_2$	14 $\overline{CLR}$	15 DO_5	16 DI_5	17 DO_6	18 DI_6	19 DO_7	20 DI_7	21 DO_8	22 DI_8	23 $\overline{INT}$	24 V_{CC}	Meas. terminal	Test limits Min	Max	Unit
1	I_{OZL}		59	4.5 V	GND										GND	GND	4.5 V					.45 V	4.5 V				5.5 V	DO_7		-20	μA
T_C = 25°C	I_{OZL}		60	4.5 V													4.5 V							.45 V	4.5 V			DO_8		-20	
	I_{OZH}		61				5.5 V										GND											DO_1		20	
			62						5.5 V																			DO_2			
			63								5.5 V																	DO_3			
			64										5.5 V															DO_4			
			65															5.5 V										DO_5			
			66																	5.5 V								DO_6			
			67																			5.5 V						DO_7			
			68																					5.5 V				DO_8			
			69	4.5 V		4.5 V	5.5 V										4.5 V											DO_1			
			70					4.5 V	5.5 V																			DO_2			
			71							4.5 V	5.5 V																	DO_3			
			72									4.5 V	5.5 V															DO_4			
			73															5.5 V	4.5 V									DO_5			
			74																	5.5 V	4.5 V							DO_6			
			75																			5.5 V	4.5 V					DO_7			
			76																					5.5 V	4.5 V			DO_8			
	I_{OS}	3011	77	GND	4.5 V	4.5 V	GND									4.5 V												DO_1	-15	-83	mA
			78					4.5 V	GND																			DO_2			
			79							4.5 V	GND																	DO_3			
			80									4.5 V	GND															DO_4			
			81															GND	4.5 V									DO_5			
			82																	GND	4.5 V							DO_6			
			83																			GND	4.5 V					DO_7			
			84																					GND	4.5 V			DO_8			
			85	4.5 V										GND		GND	GND									GND		$\overline{INT}$			

See notes at end of table.

TABLE III. Group A inspection for device type 01 - Continued.

Terminal conditions (pins not designated are open)

Subgroup	Symbol	MIL-STD-883 method	Cases J, K Test no.	1 $\overline{DS_1}$	2 MD	3 DI_1	4 DO_1	5 DI_2	6 DO_2	7 DI_3	8 DO_3	9 DI_4	10 DO_4	11 STB	12 GND	13 DS_2	14 $\overline{CLR}$	15 DO_5	16 DI_5	17 DO_6	18 DI_6	19 DO_7	20 DI_7	21 DO_8	22 DI_8	23 $\overline{INT}$	24 V_{CC}	Meas. terminal	Test limits Min	Max	Unit
1	I_{CC}	3005	86	GND											GND	4.5 V	GND										5.5 V	V_{CC}		145	mA
T_C = 25°C			87	GND	4.5 V	4.5 V		4.5 V		4.5 V		4.5 V				4.5 V	4.5 V		4.5 V		4.5 V		4.5 V		4.5 V						
			88		GND											GND															
	V_{IC}		89	-5 mA																							4.5 V	$\overline{DS_1}$		-1.2	V
			90		-5 mA																							MD			
			91			-5 mA																						DI_1			
			92					-5 mA																				DI_2			
			93							-5 mA																		DI_3			
			94									-5 mA																DI_4			
			95											-5 mA														STB			
			96													-5 mA												DS_2			
			97														-5 mA											$\overline{CLR}$			
			98																-5 mA									DI_5			
			99																		-5 mA							DI_6			
			100																				-5 mA					DI_7			
			101																						-5 mA			DI_8			
2	Same tests, terminal conditions, and limits as for subgroup 1, except T_C = 125°C and V_{IC} tests are omitted.																														
3	Same tests, terminal conditions, and limits as for subgroup 1, except T_C = -55°C and V_{IC} tests are omitted.																														
4	CI_1		102	4/											GND												5.0 V	$\overline{DS_1}$		12	pF
T_C = 25°C	CI_1		103		4/																							MD		12	
	CI_2		104			4/																						DI_1		9	
			105					4/																				DI_2			
			106							4/																		DI_3			
			107									4/																DI_4			
			108											4/														STB			
			109													4/												DS_2			
			110														4/											$\overline{CLR}$			
			111																4/									DI_5			
			112																		4/							DI_6			

See notes at end of table.

TABLE III. Group A inspection for device type 01 - Continued.

Terminal conditions (pins not designated are open)

Subgroup	Symbol	MIL-STD-883 method	Cases J, K Test no.	1 $\overline{DS_1}$	2 MD	3 DI_1	4 DO_1	5 DI_2	6 DO_2	7 DI_3	8 DO_3	9 DI_4	10 DO_4	11 STB	12 GND	13 DS_2	14 $\overline{CLK}$	15 DO_5	16 DI_5	17 DO_6	18 DI_6	19 DO_7	20 DI_7	21 DO_8	22 DI_8	23 TWT	24 V_{CC}	Meas. terminal	Test limits Min	Max	Unit
4	CI_2		113												GND								4/				5.0 V	DI_7		9	pF
T_C = 25°C	CI_2		114																						4/			DI_8		9	
	C_0		115		GND		4/									GND												DO_1		12	
			116						4/																			DO_2			
			117								4/																	DO_3			
			118										4/															DO_4			
			119															4/										DO_5			
			120																	4/								DO_6			
			121																			4/						DO_7			
			122																					4/				DO_8			
7	Func-tional test	3014	123	B	A	B	L	B	L	B	L	B	L	B		B	B	L	B	L	B	L	B	L	B	H		All outputs	See notes 1, 2, and 3		
T_C = 25°C			124		A											A	B									L					
			125		B												B														
			126		B												A														
			127		A																										
			128													B										H					
			129			A		A		A		A				B			A		A		A		A	H					
			130				H		H		H		H			A		H		H		H		H		L					
			131													B										H					
			132													A										L					
			133														B														
			134		B		L		L		L		L					L		L		L		L							
			135				H		H		H		H	A				H		H		H		H							
			136			B	L	B	L	B	L	B	L					L	B	L	B	L	B	L	B						
			137			A	H	A	H	A	H	A	H					H	A	H	A	H	A	H	A						
			138			A		A		A		A					A		A		A		A		A						
			139			A		A		A		A		B					A		A		A		A						
			140			B		B		B		B		B					B		B		B		B						
			141			B	L	B	L	B	L	B	L	A				L	B	L	B	L	B	L	B						

See notes at end of table.

TABLE III. Group A inspection for device type 01 - Continued.

Terminal conditions (pins not designated are open)

Subgroup	Symbol	MIL-STD-883 method	Cases J, F Test no.	1 $\overline{DS_1}$	2 MD	3 DI_1	4 DO_1	5 DI_2	6 DO_2	7 DI_3	8 DO_3	9 DI_4	10 DO_4	11 STB	12 GND	13 OS_2	14 $\overline{CLR}$	15 DO_5	16 DI_5	17 DO_6	18 DI_6	19 DO_7	20 DI_7	21 DO_8	22 DI_8	23 $\overline{INT}$	24 V_{CC}	Meas. terminal	Test limits Min	Max	Unit
7	Functional test	3014	142	B	B	A	H	A	H	A	H	A	H	A	GND	A	A	H	A	H	A	H	A	H	A	L	5.0 V	All outputs	See notes 1, 2, and 3		
T_C = 25°C			143			A	H	A	H	A	H	A	H	B				H	A	H	A	H	A	H	A						
			144			B	H	B	H	B	H	B	H					H	B	H	B	H	B	H	B						
			145				L		L		L		L				B	L		L		L		L							
			146		A												B														
			147	A													B									H					
			148														A									H					
			149			A	H			A		A		A			A		A		A		A		A	H					
			150			B	L			B		B		B			A		B		B		B		B	L					
			151			B	L			B		B					B		B		B		B		B	H					
			152			A	L	A		A		A					B		A		A		A		A	H					
			153	B			H		H		H		H				B	H		H		H		H		L					
			154														A									L					
			155											A												L					
			156											A		B										H					
			157											B												L					
			158											A												L					
			159				L		L		L		L	A			B	L		L		L		L		H					
			160											A			A									H					
			161											B												L					
			162											A																	
			163											B																	
			164				H		H		H		H			A		H		H		H		H							
			165													B										H					
			166													A										L					
			167			B		B		B		B							B		B		B		B						
			168				L		L		L		L				B	L		L		L		L							
			169														A														
			170		B												A														

See notes at end of table.

TABLE III. Group A inspection for device type 01 - Continued.

Terminal conditions (pins not designated are open)

Subgroup	Symbol	MIL-STD-883 method	Cases J + K Test no.	1 $\overline{DS_1}$	2 MD	3 DI_1	4 DO_1	5 DI_2	6 DO_2	7 DI_3	8 DO_3	9 DI_4	10 DO_4	11 STB	12 GND	13 DS_2	14 $\overline{CLR}$	15 DO_5	16 DI_5	17 DO_6	18 DI_6	19 DO_7	20 DI_7	21 DO_8	22 DI_8	23 $\overline{INT}$	24 V_{CC}	Meas. terminal	Test limits Min	Max	Unit
7	Functional test	3014	171	B	B	B	L	B	L	B	L	B	L	B	GND	A	B	L	B	L	B	L	B	L	B	L	5.0 V	All outputs	See notes 1, 2, and 3		
T_C = 25°C			172			A		A		A		A					A		A		A		A		A						
			173			A		A		A		A					B		A		A		A		A						
			174			B		B		B		B					B		B		B		B		B						
			175		A	A	H	A	H	A	H	A	H				A		A	H	A	H	A	H	A						
			176		B	A		A		A		A						H	A		A		A		A						
			177		B	B		B		B		B							B		B		B		B						
			178		B	A		A		A		A							A		A		A		A						
			179		A	A		B	L	B	L	B	L						B	L	B	L	B	L	B						
			180		A	B	L	A	H	B	L	B	L					L													
			181					B	L	A	H	B	L																		
			182							B	L	A	H																		
			183									B	L						A												
			184															H	B	H	A										
			185															L		L	B	H	A								
			186																			L	B	H	A						
			187											A								L		L	B						
			188													B						L		L	B	H					
			189		B		Z		Z		Z		Z					Z		Z		Z		Z	B						
			190		B	A	Z	A	Z	A	Z	A	Z					Z	A	Z	A	Z	A	Z	A						
			191		A		H		H		H		H					H		H		H		H							
			192		B		Z		Z		Z		Z				B	Z		Z		Z		Z							
			193											B			B														
			194											B			A														
			195											B			B														
8	Same tests, terminal conditions, and limits as for subgroup 7, except T_C = 125°C and -55°C.																														

See notes at end of table.

TABLE III. Group A inspection for device type 01 - Continued.
Terminal conditions (pins not designated are open)

Symbol	MIL-STD-883 method	Cases J, K Test no.	1 $\overline{DS_1}$	2 MD	3 DI_1	4 DO_1	5 DI_2	6 DO_2	7 DI_3	8 DO_3	9 DI_4	10 DO_4	11 STB	12 GND	13 DS_2	14 $\overline{CLR}$	15 DO_5	16 DI_5	17 DO_6	18 DI_6	19 DO_7	20 DI_7	21 DO_8	22 DI_8	23 $\overline{INT}$	24 V_{CC}	Meas. terminal	Test limits subgroup 9 T_C = 25°C Min	Max	Unit	Test limits subgroups 10 and 11 T_C = -55°C, 125°C Min	Max	Unit
t_{PHL1}	3003	196	IN-P	4.5 V	IN-M	OUT							IN-N	GND	IN-N	4.5 V										5.0 V	DO_1		30	ns		40	ns
		197					IN-M	OUT																			DO_2						
		198							IN-M	OUT																	DO_3						
		199									IN-M	OUT															DO_4						
		200															OUT	IN-M									DO_5						
		201																	OUT	IN-M							DO_6						
		202																			OUT	IN-M					DO_7						
		203																					OUT	IN-M			DO_8						
t_{PLH1}		204			IN-R	OUT																					DO_1						
		205					IN-R	OUT																			DO_2						
		206							IN-R	OUT																	DO_3						
		207									IN-R	OUT															DO_4						
		208															OUT	IN-R									DO_5						
		209																	OUT	IN-R							DO_6						
		210																			OUT	IN-R					DO_7						
		211																					OUT	IN-R			DO_8						
t_{PLH2}		212	GND	GND	IN-B	OUT									4.5 V												DO_1		40			50	
		213					IN-B	OUT																			DO_2						
		214							IN-B	OUT																	DO_3						
		215									IN-B	OUT															DO_4						
		216															OUT	IN-B									DO_5						
		217																	OUT	IN-B							DO_6						
		218																			OUT	IN-B					DO_7						
		219																					OUT	IN-B			DO_8						
t_{PHL2}		220			IN-B	OUT							IN-C		IN-C												DO_1						
		221					IN-B	OUT																			DO_2						
		222							IN-B	OUT																	DO_3						
		223									IN-B	OUT															DO_4						
		224															OUT	IN-B									DO_5						

See notes at end of table.

TABLE III. Group A inspection for device type 01 - Continued.
Terminal conditions (pins not designated are open)

Symbol	MIL-STD-883 method	Cases J, K Test no.	1 $\overline{DS}_1$	2 MD	3 DI_1	4 DO_1	5 DI_2	6 DO_2	7 DI_3	8 DO_3	9 DI_4	10 DO_4	11 STB	12 GND	13 DS_2	14 $\overline{CLR}$	15 DO_5	16 DI_5	17 DO_6	18 DI_6	19 DO_7	20 DI_7	21 DO_8	22 DI_8	23 $\overline{INT}$	24 V_{CC}	Meas. terminal	Test limits subgroup 9 T_C = 25°C Min	Max	Unit	Test limits subgroups 10 and 11 T_C = -55°C, 125°C Min	Max	Unit
t_{PHL2}	3003	225	GND	GND									IN-C	GND	IN-C	4.5 V			OUT	IN-B						5.0 V	DO_6		40	ns		50	ns
		226																			OUT	IN-B					DO_7						
		227																					OUT	IN-B			DO_8						
t_{PLH3}		228											IN-D		IN-E										OUT		$\overline{INT}$		30			35	
t_{PLH3}		229	IN-F										IN-D		4.5 V										OUT		$\overline{INT}$		30			35	
t_{PHL3}		230	GND										IN-D		IN-E										OUT		$\overline{INT}$		40			55	
t_{PHL4}		231	IN-G	4.5 V	IN-B	OUT									4.5 V												DO_1					50	
		232					IN-B	OUT																			DO_2						
		233							IN-B	OUT																	DO_3						
		234									IN-B	OUT															DO_4						
		235															OUT	IN-B									DO_5						
		236																	OUT	IN-B							DO_6						
		237																			OUT	IN-B					DO_7						
		238																					OUT	IN-B			DO_8						
		239	GND		IN-B	OUT									IN-C												DO_1						
		240					IN-B	OUT																			DO_2						
		241							IN-B	OUT																	DO_3						
		242									IN-B	OUT															DO_4						
		243															OUT	IN-B									DO_5						
		244																	OUT	IN-B							DO_6						
		245																			OUT	IN-B					DO_7						
		246																					OUT	IN-B			DO_8						
t_{PLH4}		247	IN-G		IN-B	OUT									4.5 V												DO_1						
		248					IN-B	OUT																			DO_2						
		249							IN-B	OUT																	DO_3						
		250									IN-B	OUT															DO_4						
		251															OUT	IN-B									DO_5						
		252																	OUT	IN-B							DO_6						
		253																			OUT	IN-B					DO_7						

See notes at end of table.

TABLE III. Group A inspection for device type 01 - Continued.
Terminal conditions (pins not designated are open)

Symbol	MIL-STD-883 method	Cases J, K Test no.	1 $\overline{DS}_1$	2 MD	3 DI_1	4 DO_1	5 DI_2	6 DO_2	7 DI_3	8 DO_3	9 DI_4	10 DO_4	11 STB	12 GND	13 DS_2	14 $\overline{CLR}$	15 DO_5	16 DI_5	17 DO_6	18 DI_6	19 DO_7	20 DI_7	21 DO_8	22 DI_8	23 $\overline{INT}$	24 V_{CC}	Meas. terminal	Test limits subgroup 9 T_C = 25°C Min	Max	Unit	Test limits subgroups 10 and 11 T_C = -55°C, 125°C Min	Max	Unit
t_{PLH4}	3003	254	IN-G	4.5 V										GND	4.5 V	4.5 V							OUT	IN-B		5.0 V	DO_8		40	ns		50	ns
		255	GND		IN-B	OUT									IN-C												DO_1						
		256					IN-B	OUT																			DO_2						
		257							IN-B	OUT																	DO_3						
		258									IN-B	OUT															DO_4						
		259															OUT	IN-B									DO_5						
		260																	OUT	IN-B							DO_6						
		261																			OUT	IN-B					DO_7						
		262																					OUT	IN-B			DO_8						
t_{PHL5}		263			4.5 V	OUT							4.5 V		IN-L	IN-H											DO_1		55			65	
		264					4.5 V	OUT																			DO_2						
		265							4.5 V	OUT																	DO_3						
		266									4.5 V	OUT															DO_4						
		267															OUT	4.5 V									DO_5						
		268																	OUT	4.5 V							DO_6						
		269																			OUT	4.5 V					DO_7						
		270																					OUT	4.5 V			DO_8						
t_{PZL1}		271	IN-J	GND	GND	OUT									4.5 V	4.5 V											DO_1		45			50	
		272					GND	OUT																			DO_2						
		273							GND	OUT																	DO_3						
		274									GND	OUT															DO_4						
		275															OUT	GND									DO_5						
		276																	OUT	GND							DO_6						
		277																			OUT	GND					DO_7						
		278																					OUT	GND			DO_8						
		279	GND		GND	OUT									IN-K												DO_1						
		280					GND	OUT																			DO_2						
		281							GND	OUT																	DO_3						
		282									GND	OUT															DO_4						

See notes at end of table.

TABLE III. Group A inspection for device type 01 - Continued.
Terminal conditions (pins not designated are open)

Symbol	MIL-STD-883 method	Cases J, K Test no.	1 $\overline{DS_1}$	2 MD	3 DI_1	4 DO_1	5 DI_2	6 DO_2	7 DI_3	8 DO_3	9 DI_4	10 DO_4	11 STB	12 GND	13 DS_2	14 $\overline{CLK}$	15 DO_5	16 DI_5	17 DO_6	18 DI_6	19 DO_7	20 DI_7	21 DO_8	22 DI_8	23 $\overline{INT}$	24 V_{CC}	Meas. terminal	Test limits subgroup 9 T_C = 25°C Min	Max	Unit	Test limits subgroups 10 and 11 T_C = -55°C, 125°C Min	Max	Unit
t_{PZL1}	3003	283	GND	GND									4.5 V	GND	IN-K	4.5 V	OUT	GND								5.0 V	DO_5		45	ns		50	ns
		284																	OUT	GND							DO_6						
		285																			OUT	GND					DO_7						
		286																					OUT	GND			DO_8						
t_{PZH1}		287	IN-J		4.5 V	OUT									4.5 V												DO_1						
		288					4.5 V	OUT																			DO_2						
		289							4.5 V	OUT																	DO_3						
		290									4.5 V	OUT															DO_4						
		291															OUT	4.5 V									DO_5						
		292																	OUT	4.5 V							DO_6						
		293																			OUT	4.5 V					DO_7						
		294																					OUT	4.5 V			DO_8						
		295	GND		4.5 V	OUT									IN-K												DO_1		40				
		296					4.5 V	OUT																			DO_2						
		297							4.5 V	OUT																	DO_3						
		298									4.5 V	OUT															DO_4						
		299															OUT	4.5 V									DO_5						
		300																	OUT	4.5 V							DO_6						
		301																			OUT	4.5 V					DO_7						
		302																					OUT	4.5 V			DO_8						
t_{PLZ1}		303	IN-J		GND	OUT									4.5 V												DO_1						
		304					GND	OUT																			DO_2						
		305							GND	OUT																	DO_3						
		306									GND	OUT															DO_4						
		307															OUT	GND									DO_5						
		308																	OUT	GND							DO_6						
		309																			OUT	GND					DO_7						
		310																					OUT	GND			DO_8						
		311	GND		GND	OUT									IN-K												DO_1						

See notes at end of table.

TABLE III. Group A inspection for device type 01 - Continued.
Terminal conditions (pins not designated are open)

Symbol	MIL-STD-883 method	Cases J, K Test no.	1 $\overline{DS_1}$	2 MD	3 DI_1	4 DO_1	5 DI_2	6 DO_2	7 DI_3	8 DO_3	9 DI_4	10 DO_4	11 STB	12 GND	13 DS_2	14 $\overline{CLR}$	15 DO_5	16 DI_5	17 DO_6	18 DI_6	19 DO_7	20 DI_7	21 DO_8	22 DI_8	23 $\overline{INT}$	24 V_{CC}	Meas. terminal	Test limits subgroup 9 T_C = 25°C Min	Max	Unit	Test limits subgroups 10 and 11 T_C = -55°C, 125°C Min	Max	Unit
t_{PLZ1}	3003	312	GND	GND			GND	OUT					4.5 V	GND	IN-K	4.5 V										5.0 V	DO_2		40	ns		50	ns
		313							GND	OUT																	DO_3						
		314									GND	OUT															DO_4						
		315															OUT	GND									DO_5						
		316																	OUT	GND							DO_6						
		317																			OUT	GND					DO_7						
		318																					OUT	GND			DO_8						
t_{PHZ1}		319	IN-J		4.5 V	OUT									4.5 V												DO_1		5/			5/	
		320					4.5 V	OUT																			DO_2						
		321							4.5 V	OUT																	DO_3						
		322									4.5 V	OUT															DO_4						
		323															OUT	4.5 V									DO_5						
		324																	OUT	4.5 V							DO_6						
		325																			OUT	4.5 V					DO_7						
		326																					OUT	4.5 V			DO_8						
		327	GND		4.5 V	OUT									IN-K												DO_1						
		328					4.5 V	OUT																			DO_2						
		329							4.5 V	OUT																	DO_3						
		330									4.5 V	OUT															DO_4						
		331															OUT	4.5 V									DO_5						
		332																	OUT	4.5 V							DO_6						
		333																			OUT	4.5 V					DO_7						
		334																					OUT	4.5 V			DO_8						

NOTES:
1. Input voltages are: A = 2.0 V; B = 0.8 V.
2. Output voltages are: H = 3.4 V minimum; L = 0.45 V maximum.
3. Output high impedance state (=Z) must be checked at every data point noted in subgroup 7. Either of the two following test procedures may be used:

   a. Forcing a voltage and measuring the resultant current.

Forcing voltage	Limit for resulting current
0.45 V	±20 μA
5.5 V	±20 μA

   b. A load as shown below is connected to the output. The output voltage shall be measured 1 μs after the high impedance level is enabled. The resultant voltage at the output pin shall be $1.0\ V \leq V_{OUT} \leq 2.0\ V$.

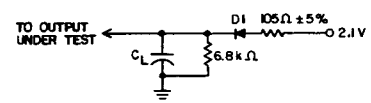

D1 = 1N3064 or equivalent; C_L = 30 ±5 pF (includes tester, wiring, probe and load capacitance).

4. The capacitance measurement shall be made between the indicated terminal and the ground terminal (GND) at a frequency of 1 MHz. The dc bias of the measuring instrument shall be 2.5 V. The ac signal amplitude shall be less than 50 mVrms.

5. a. Maximum limit is 270 ns for a 30 pF load in figure 5.
   b. Maximum limit is 1160 ns for a 150 pF load in figure 5.
   c. Maximum limit is 50 ns for a 5 pF load in figure 5.

4.4 Quality conformance inspection. Quality conformance inspection shall be in accordance with MIL-M-38510. Inspections to be performed shall be as specified in method 5005 of MIL-STD-883 and herein for groups A, B, C, and D inspections (see 4.4.1 through 4.4.4). Generic test data (see 6.6) may be used to satisfy the requirement for groups C and D inspections. Quality conformance inspection shall be completed on the specific devices covered by this specification before they are shipped.

4.4.1 Group A inspection. Group A inspection shall be in accordance with table I of method 5005 of MIL-STD-883 and as follows:

a. Tests shall be as specified in table II herein.

b. Subgroup 1 (C_I, C_O measurements) shall be performed only after process or design changes which may affect design capacitance.

c. Subgroup 4, 5, 6, 10, and 11 of table I of method 5005 of MIL-STD-883 shall be omitted.

4.4.2 Group B inspection. Group B inspection shall be in accordance with table II of method 5005 of MIL-STD-883 . Electrical parameters shall be as specified in table II herein.

4.4.3 Group C inspection. Group C inspection shall be in accordance with table III of method 5005 of MIL-STD-883 and as follows:

a. End-point electrical parameters shall be as specified in table II herein.

b. Subgroups 3 and 4 shall be added to the group C inspection requirements for class B devices and shall consist of the tests, conditions, and limits specified for subgroups 10 and 11 of group A.

c. Steady-state life test (method 1005 of MIL-STD-883) conditions:

(1) Test condition D or E, using the circuit shown on figure 4, or equivalent.

(2) T_A = +125°C, minimum.

(3) Test duration: 1,000 hours, except as permitted by appendix B of MIL-M-38510.

4.4.4 Group D inspection. Group D inspection shall be in accordance with table IV of method 5005 of MIL-STD-883. End-point electrical parameters shall be as specified in table II herein.

4.5 Methods of inspection. Methods of inspection shall be specified as follows:

4.5.1 Voltage and current. All voltages given are referenced to the microcircuit terminal. Currents given are conventional and positive when flowing into the referenced terminal.

5. PACKAGING

5.1 Packaging requirements. The requirements for packaging shall be as specified in MIL-M-38510.

6. NOTES

6.1 Notes. The notes specified in MIL-M-38510 are applicable to this specification.

6.2 Intended use. Microcircuits conforming to this specification are intended for logistic support of existing equipment.

6.3 Ordering data. The acquisition document should specify the following:

a. Complete part number (see 1.2).

b. Requirements for delivery of one copy of the quality conformance inspection data pertinent to the device inspection lot to be supplied with each shipment by the device manufacturer, if applicable.

c. Requirement for certificate of compliance, if applicable.

d. Requirements for notification of change of product or process to the contracting activity, if applicable.

e. Requirements for packaging and packing.

f. Requirements for special carriers, lead lengths, or lead forming, if applicable. These requirements shall not affect the part number. Unless otherwise specified, these requirements will not apply to direct purchase or direct shipment to the Government.

6.4 Abbreviations, symbols, and definitions. The abbreviations, symbols, and definitions used herein are defined in MIL-M-38510 and MIL-STD-1331.

6.5 Logistic support. Lead materials and finishes (see 3.3) are interchangeable. Unless otherwise specified, microcircuits acquired for Government logistic support will be acquired to device class B (see 1.2.2) and lead material and finsih C (see 3.3). Longer length leads and lead forming shall not affect the part number.

6.6 Generic test data. Generic test data may be used to satisfy the requirements of 4.4.3. Group C generic test data shall be on date codes no more than one year old and on a die in the same microcircuit group (see appendix E of MIL-M-38510) with the same material, design and process and from the same plant as the die represented. Group D (see 4.4.4) generic data shall be on date codes no more than one year old and on the same package type, (see terms, definitions, and symbols of MIL-M-38510) and from the same plant as the package represented. The vendor is required to retain the generic data for a period of not less than 36 months from the date of shipment.

6.7 Substitutability. The cross-reference information below is presented for the convenience of users. Microcircuits covered by this specificatin shall functionally replace the listed generic-industry type. Generic-industry microcircuit types may not have equivalent operational performance characteristics across military temperature ranges or reliability factors equivalent to MIL-M-38510 device types and may have slight physical variations in relation to case size. The presence of this information shall not be deemed as permitting substitution of generic-industry types for MIL-M-38510 types or as a waiver of any of the provisions of MIL-M-38510.

Military device type	Generic-industry type
01	8212, 54S412

6.8 Ordering guidance. Since the qualification and certification requirements have been removed from the specification, orders may be placed immediately.

6.9 Changes from previous issue. Asterisks are not used in this revision to identify changes with respect to the previous issue due to the extensiveness of the changes.

Custodian:
Army - ER
Navy - EC
Air Force - 17

Review activities:
Army - AR, MI
Air Force - 11, 19, 85, 99
Navy - OS, SH
DLA - ES

User activities:
Army - SM
Navy - AS, CG, MC

Agent:
DLA - ES

Preparing activity:
Air Force - 17

(Project 5962-0603-4)