INCH-POUND
MIL-M-38510/320D
w/AMENDMENT 1
4 June 2008
SUPERSEDING
MIL-M-38510/320D
14 July 2003

MILITARY SPECIFICATION

MICROCIRCUITS, DIGITAL, BIPOLAR LOW-POWER SCHOTTKY TTL, COUNTERS, CASCADABLE, MONOLITHIC SILICON

Inactive for new design after 18 April 1997.

This specification is approved for use by all Departments and Agencies of the Department of Defense.

1. SCOPE

1.1 Scope. This specification covers the detail requirements for monolithic silicon, low-power Schottky TTL, binary and decade counters. Two product assurance classes and a choice of case outlines and lead finishes are provided for each type and are reflected in the complete part number. For this product, the requirements of MIL-M-38510 have been superseded by MIL-PRF-38535, (see 6.3).

1.2 Part number. The part number should be in accordance with MIL-PRF-38535, and as specified herein.

1.2.1 Device types. The device types should be as follows:

Device type	Circuit
01	Presettable decade counter, cascadable
02	Presettable 4 - bit binary counter, cascadable
03	Decade counter
04	4 - bit binary counter

1.2.2 Device class. The device class should be the product assurance level as defined in MIL-PRF-38535.

1.2.3 Case outlines. The case outlines should be as designated in MIL-STD-1835 and as follows:

Outline letter	Descriptive designator	Terminals	Package style
A	GDFP5-F14 or CDFP6-F14	14	Flat pack
B	GDFP4-F14	14	Flat pack
C	GDIP1-T14 or CDIP2-T14	14	Dual-in-line
D	GDFP1-F14 or CDFP2-F14	14	Flat pack
X	CQCC2-N20	20	Square leadless chip carrier
2	CQCC1-N20	20	Square leadless chip carrier

Comments, suggestions, or questions on this document should be addressed to: Commander, Defense Supply Center Columbus, ATTN: DSCC-VAS, P. O. Box 3990, Columbus, OH 43218-3990, or emailed to bipolar@dla.mil. Since contact information can change, you may want to verify the currency of this address information using the ASSIST Online database at http://assist.daps.dla.mil.

1.3 Absolute maximum ratings.

Supply voltage range ..... -0.5 V dc to +7.0 V dc
Input voltage range ..... -1.5 V dc at -18 mA to +5.5 V dc
Storage temperature range ..... -65° to +150°C
Maximum power dissipation, (P_D) 1/
  Device type 01 and 02 ..... 148.5 mW
  Device type 03 and 04 ..... 82.5 mW dc
Lead temperature (soldering, 10 seconds) ..... +300°C
Thermal resistance, junction to case (θ_{JC}):
  Cases A, B, C, D, X, and 2 ..... (See MIL-STD-1835)
Junction temperature (T_J) 2/ ..... +175°C

1.4 Recommended operating conditions.

Supply voltage (V_{CC}) ..... 4.5 V dc minimum to 5.5 V dc maximum
Minimum high level input voltage (V_{IH}) ..... 2.0 V dc
Maximum low level input voltage (V_{IL}) ..... 0.7 V dc
Normalized fanout (each output) ..... 10 maximum
Width of input count pulse, $t_{p(IN)}$
  Types 01 and 02
    $\overline{CP0}$ ..... 20 ns minimum
    $\overline{CP1}$ ..... 30 ns minimum
  Types 03 and 04
    Input A ..... 17 ns minimum
    Input B ..... 34 ns minimum
Width of reset pulse, $t_{p(reset)}$
  Types 01 and 02 ..... 20 ns minimum
  Types 03 and 04 ..... 25 ns minimum
Input clock frequency, f_{clock}
  Types 01 and 02
    $\overline{CP0}$ ..... 0 to 30 MHz
    $\overline{CP1}$ ..... 0 to 15 MHz
  Types 03 and 04
    Input A ..... 0 to 29 MHz
    Input B ..... 0 to 13 MHz
Width of parallel load pulse, $t_{W(\overline{PL})}$
  Types 01 and 02 ..... 20 ns minimum
Setup time, $t_{(SETUP)}$
    Data inputs high ..... 10 ns minimum
    Data inputs low ..... 15 ns minimum
Enable time from load, reset to clock t_{EN}
  Types 01 and 02 ..... 20 ns minimum
Hold time at data inputs, t_H
  Types 01 and 02 ..... 20 ns minimum
Case operating temperature range (T_C) ..... -55° to +125°C

1/ Must withstand the added P_D due to short-circuit test (e.g., I_{OS}).
2/ Maximum junction temperature shall not be exceeded except in accordance with allowable short duration burn-in screening condition in accordance with MIL-PRF-38535.

2. APPLICABLE DOCUMENT

2.1 General. The documents listed in this section are specified in sections 3, 4, or 5 of this specification. This section does not include documents cited in other sections of this specification or recommended for additional information or as examples. While every effort has been made to ensure the completeness of this list, document users are cautioned that they must meet all specified requirements of documents cited in sections 3, 4, or 5 of this specification, whether or not they are listed.

2.2 Government documents.

2.2.1 Specifications and standards. The following specifications and standards form a part of this specification to the extent specified herein. Unless otherwise specified, the issues of these documents are those cited in the solicitation or contract.

DEPARTMENT OF DEFENSE SPECIFICATIONS

MIL-PRF-38535 - Integrated Circuits (Microcircuits) Manufacturing, General Specification for.

DEPARTMENT OF DEFENSE STANDARDS

MIL-STD-883 - Test Method Standard for Microelectronics.
MIL-STD-1835 - Interface Standard Electronic Component Case Outlines

(Copies of these documents are available online at http://assist.daps.dla.mil/quicksearch/ or from the Standardization Document Order Desk, 700 Robbins Avenue, Building 4D, Philadelphia, PA 19111-5094.)

2.3 Order of precedence. Unless otherwise noted herein or in the contract, in the event of a conflict between the text of this specification and the references cited herein, the text of this document takes precedence. Nothing in this document, however, supersedes applicable laws and regulations unless a specific exemption has been obtained.

3. REQUIREMENTS

3.1 Qualification. Microcircuits furnished under this specification shall be products that are manufactured by a manufacturer authorized by the qualifying activity for listing on the applicable qualified manufacturers list before contract award (see 4.3 and 6.4).

3.2 Item requirements. The individual item requirements shall be in accordance with MIL-PRF-38535 and as specified herein or as modified in the device manufacturer's Quality Management (QM) plan. The modification in the QM plan shall not affect the form, fit, or function as described herein.

3.3 Design, construction, and physical dimensions. The design, construction, and physical dimensions shall be as specified in MIL-PRF-38535 and herein.

3.3.1 Terminal connections. The terminal connections shall be as specified on figure 1.

3.3.2 Logic diagrams. The logic diagrams shall be as specified on figure 2.

3.3.3 Truth tables. The truth tables shall be as specified on figure 3.

3.3.4 Schematic circuits. The schematic circuits shall be maintained by the manufacturer and made available to the qualifying activity and the preparing activity upon request.

3.3.5 Case outlines. The case outlines shall be as specified in 1.2.3.

3.4 Lead material and finish. The lead material and finish shall be in accordance with MIL-PRF-38535 (see 6.6).

3.5 Electrical performance characteristics. The electrical performance characteristics are as specified in table I, and apply over the full recommended case operating temperature range, unless otherwise specified.

3.6 Electrical test requirements. The electrical test requirements for each device class shall be the subgroups specified in table II. The electrical tests for each subgroup are described in table III.

3.7 Marking. Marking shall be in accordance with MIL-PRF-38535.

3.8 Microcircuit group assignment. The devices covered by this specification shall be in microcircuit group number 12 (see MIL-PRF-38535, appendix A).

4. VERIFICATION

4.1 Sampling and inspection. Sampling and inspection procedures shall be in accordance with MIL-PRF-38535 or as modified in the device manufacturer's Quality Management (QM) plan. The modification in the QM plan shall not effect the form, fit, or function as described herein.

4.2 Screening. Screening shall be in accordance with MIL-PRF-38535 and shall be conducted on all devices prior to qualification and quality conformance inspection. The following additional criteria shall apply:

a. The burn-in test duration, test condition, and test temperature, or approved alternatives shall be as specified in the device manufacturer's QM plan in accordance with MIL-PRF-38535. The burn-in test circuit shall be maintained under document control by the device manufacturer's Technology Review Board (TRB) in accordance with MIL-PRF-38535 and shall be made available to the acquiring or preparing activity upon request. The test circuit shall specify the inputs, outputs, biases, and power dissipation, as applicable, in accordance with the intent specified in test method 1015 of MIL-STD-883.

b. Interim and final electrical test parameters shall be as specified in table II, except interim electrical parameters test prior to burn-in is optional at the discretion of the manufacturer.

c. Additional screening for space level product shall be as specified in MIL-PRF-38535.

4.3 Qualification inspection. Qualification inspection shall be in accordance with MIL-PRF-38535.

4.4 Technology Conformance Inspection (TCI). Technology conformance inspection shall be in accordance with MIL-PRF-38535 and herein for groups A, B, C, and D inspections (see 4.4.1 through 4.4.4).

TABLE I. Electrical performance characteristics.

Test	Symbol	Conditions $-55°C \le T_C \le +125°C$ unless otherwise specified	Device types	Limits Min	Limits Max	Unit
High level output voltage	V_{OH}	V_{CC} = 4.5 V, V_{IL} = 0.7 V, V_{IH} = 2.0 V, I_{OH} = -400 µA,	All	2.5		V
Low level output voltage	V_{OL}	V_{CC} = 4.5 V, V_{IH} = 2.0 V, 1/ V_{IL} = 0.7 V, I_{OL} = 4 mA,	All		0.4	V
Input clamp voltage	V_{IC}	V_{CC} = 4.5 V, I_{IN} = -18 mA, T_C = +25°C	All		-1.5	V
High level input current at reset inputs	I_{IH1}	V_{CC} = 5.5 V, V_{IN} = 2.7 V	03, 04		20	µA
			01, 02		40	
High level input current at reset inputs	I_{IH2}	V_{CC} = 5.5 V, V_{IN} = 5.5 V	03, 04		100	µA
			01, 02		200	
High level input current at input A	I_{IH3}	V_{CC} = 5.5 V, V_{IN} = 2.7 V	03, 04		80	µA
High level input current at input A	I_{IH4}	V_{CC} = 5.5 V, V_{IN} = 5.5 V	03, 04		400	µA
High level input current at input B	I_{IH5}	V_{CC} = 5.5 V, V_{IN} = 2.7 V	03		160	µA
			04		80	
High level input current at input B	I_{IH6}	V_{CC} = 5.5 V, V_{IN} = 5.5 V	03		800	µA
			04		400	
High level input current at load, data inputs	I_{IH7}	V_{CC} = 5.5 V, V_{IN} = 2.7 V	01, 02		20	µA
High level input current at load, data inputs	I_{IH8}	V_{CC} = 5.5 V, V_{IN} = 5.5 V	01, 02		100	µA
High level input current at $\overline{CP0}$	I_{IH9}	V_{CC} = 5.5 V, V_{IN} = 2.7 V	01, 02		40	µA
High level input current at $\overline{CP0}$	I_{IH10}	V_{CC} = 5.5 V, V_{IN} = 5.5 V	01, 02		200	µA
High level input current at $\overline{CP1}$	I_{IH11}	V_{CC} = 5.5 V, V_{IN} = 2.7 V	01, 02		80	µA
High level input current at $\overline{CP1}$	I_{IH12}	V_{CC} = 5.5 V, V_{IN} = 5.5 V	01, 02		400	µA
Low level input current at reset inputs	I_{IL1}	V_{CC} = 5.5 V, V_{IN} = 0.4 V	03, 04	-30	-400	µA
			01, 02	-120	-800	
Low level input current at input A	I_{IL2}	V_{CC} = +5.5 V, V_{IN} = +0.4 V	03, 04	-0.5	-2.4	mA
Low level input current at input B	I_{IL3}	V_{CC} = +5.5 V, V_{IN} = +0.4 V	03, 04	-0.4	-3.2	mA
Low level input current at load, data inputs	I_{IL4}	V_{CC} = 5.5 V, V_{IN} = 0.4 V	01, 02	-120	-400	µA
Low level input current at $\overline{CP0}$	I_{IL5}	V_{CC} = 5.5 V, V_{IN} = 0.4 V	01, 02	-0.6	-2.6	mA

See footnotes at end of table.

TABLE I. Electrical performance characteristics.

Test	Symbol	Conditions $-55°C \le T_C \le +125°C$ unless otherwise specified	Device types	Limits Min	Limits Max	Unit
Low level input current at $\overline{CP1}$	I_{IL6}	V_{CC} = 5.5 V, V_{IN} = 0.4 V	01	-0.4	-3.2	mA
			02	-0.4	-1.6	
Short circuit output current	I_{OS}	V_{CC} = 5.5 V 2/	01, 02	-15	-100	mA
			03, 04	-15	-130	
Supply current	I_{CC}	V_{CC} = 5.5 V, V_{IN} = 0 V 3/	01, 02		27	mA
			03, 04		15	
Maximum count frequency at input $\overline{CP0}$	f_{MAX}	V_{CC} = 4.5 V, C_L = 50 pF ±10% R_L = 2 kΩ	01, 02	30		MHz
Maximum count frequency at input $\overline{CP1}$	f_{MAX}		01, 02	15		MHz
Maximum input A count frequency	f_{MAX}	V_{CC} = 5.0 V, C_L = 50 pF ±10%, R_L = 2 kΩ	03, 04	29		MHz
Propagation delay time low to high, A to QC	t_{PLH1} 4/		03, 04	3	74	ns
Propagation delay time high to low, A to QC	t_{PHL1} 4/		03, 04	3	81	ns
Propagation delay time low to high, B to QD	t_{PLH2}		03	3	52	ns
			04	3	78	
Propagation delay time high to low, B to QD	t_{PHL2}		03	3	56	ns
			04	3	78	
Propagation delay time low to high, $\overline{CP0}$ to Q2	t_{PLH3} 5/		01, 02	3	100	ns
Propagation delay time high to low, $\overline{CP0}$ to Q2	t_{PHL3} 5/		01, 02	3	107	ns
Propagation delay time low to high, $\overline{CP1}$ to Q3	t_{PLH4}		01	3	38	ns
			02	3	78	
Propagation delay time high to low, $\overline{CP1}$ to Q3	t_{PHL4}		01	3	52	ns
			02	3	110	
Propagation delay time low to high, load to Q	t_{PLH5}		01, 02	3	46	ns
Propagation delay time high to low, load to Q	t_{PHL5}		01, 02	3	65	ns
Propagation delay time high to low, reset to Q	t_{PHL6}		02	3	46	ns

1/ Input B ($\overline{CP1}$) is connected to QA (Q0) during the V_{OL} test.
2/ Not more than one output should be shorted at a time.
3/ I_{CC} is measured with all outputs open, both Ro inputs grounded following momentary connection to 4.5 V and all other inputs grounded.
4/ When testing t_{PHL1} or t_{PLH1}, the QA pin shall be connected to the input B pin.
5/ When testing t_{PHL3} or t_{PLH3}, the Q0 pin shall be connected to the $\overline{CP1}$ pin.

TABLE II. Electrical test requirements.

MIL-PRF-38535 test requirements	Subgroups (see table III)	
	Class S devices	Class B devices
Interim electrical parameters	1	1
Final electrical test parameters	1*, 2, 3, 7, 9, 10, 11	1*, 2, 3, 7, 9
Group A test requirements	1, 2, 3, 7, 8, 9, 10, 11	1, 2, 3, 7, 8, 9, 10, 11
Group B electrical test parameters when using the method 5005 QCI option	1, 2, 3, 7, 8, 9, 10, 11	N/A
Group C end-point electrical parameters	1, 2, 3, 7, 8 9, 10, 11	1, 2, 3
Group D end-point electrical parameters	1, 2, 3	1, 2, 3

*PDA applies to subgroup 1.

4.4.1 Group A inspection. Group A inspection shall be in accordance with table III of MIL-PRF-38535 and as follows:

a. Tests shall be as specified in table II herein.

b. Subgroups 4, 5, and 6 shall be omitted.

4.4.2 Group B inspection. Group B inspection shall be in accordance with table II of MIL-PRF-38535.

4.4.3 Group C inspection. Group C inspection shall be in accordance with table IV of MIL-PRF-38535 and as follows:

a. End-point electrical parameters shall be as specified in table II herein.

b. The steady-state life test duration, test condition, and test temperature, or approved alternatives shall be as specified in the device manufacturer's QM plan in accordance with MIL-PRF-38535. The burn-in test circuit shall be maintained under document control by the device manufacturer's Technology Review Board (TRB) in accordance with MIL-PRF-38535 and shall be made available to the acquiring or preparing activity upon request. The test circuit shall specify the inputs, outputs, biases, and power dissipation, as applicable, in accordance with the intent specified in test method 1005 of MIL-STD-883.

4.4.4 Group D inspection. Group D inspection shall be in accordance with table V of MIL-PRF-38535. End-point electrical parameters shall be as specified in table II herein.

4.5 Methods of inspection. Methods of inspection shall be specified and as follows.

4.5.1 Voltage and current. All voltages given are referenced to the microcircuit ground terminal. Currents given are conventional and positive when flowing into the referenced terminal.

Terminal number	Terminal symbol device type 01 and 02		Terminal symbol device type 03		Terminal symbol device type 04	
	Cases A, B, C, and D	Cases X and 2	Cases A, B, C, and D	Cases X and 2	Cases A, B, C, and D	Cases X and 2
1	$\overline{PL}$	NC	R9(1)	NC	NC	NC
2	Q2	$\overline{PL}$	NC	R9(1)	NC	NC
3	D2	Q2	R9(2)	NC	NC	NC
4	D0	D2	QC	R9(2)	QC	NC
5	Q0	NC	QB	NC	QB	NC
6	$\overline{CP1}$	D0	NC	QC	NC	QC
7	GND	NC	GND	NC	GND	NC
8	$\overline{CP0}$	Q0	QD	QB	QD	QB
9	Q1	$\overline{CP1}$	QA	NC	QA	NC
10	D1	GND	INPUT A	GND	INPUT A	GND
11	D3	NC	INPUT B	NC	INPUT B	NC
12	Q3	$\overline{CP0}$	R0(1)	QD	R0(1)	QD
13	$\overline{MR}$	Q1	R0(2)	QA	R0(2)	QA
14	V_{CC}	D1	V_{CC}	INPUT A	V_{CC}	INPUT A
15		NC		NC		NC
16		D3		INPUT B		INPUT B
17		NC		NC		NC
18		Q3		R0(1)		R0(1)
19		$\overline{MR}$		R0(2)		R0(2)
20		V_{CC}		V_{CC}		V_{CC}

FIGURE 1. Terminal connections.

DEVICE TYPE 01

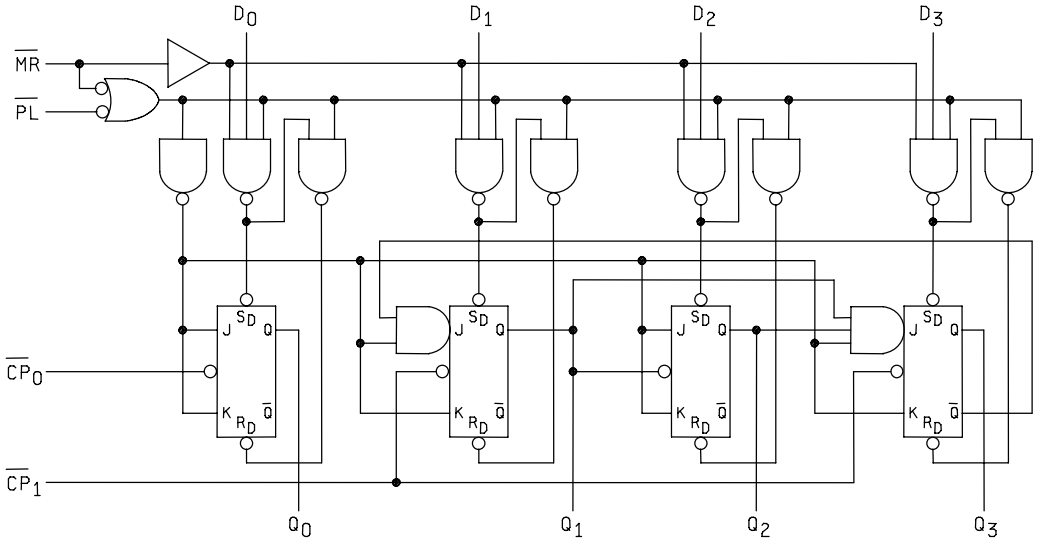

DEVICE TYPE 02

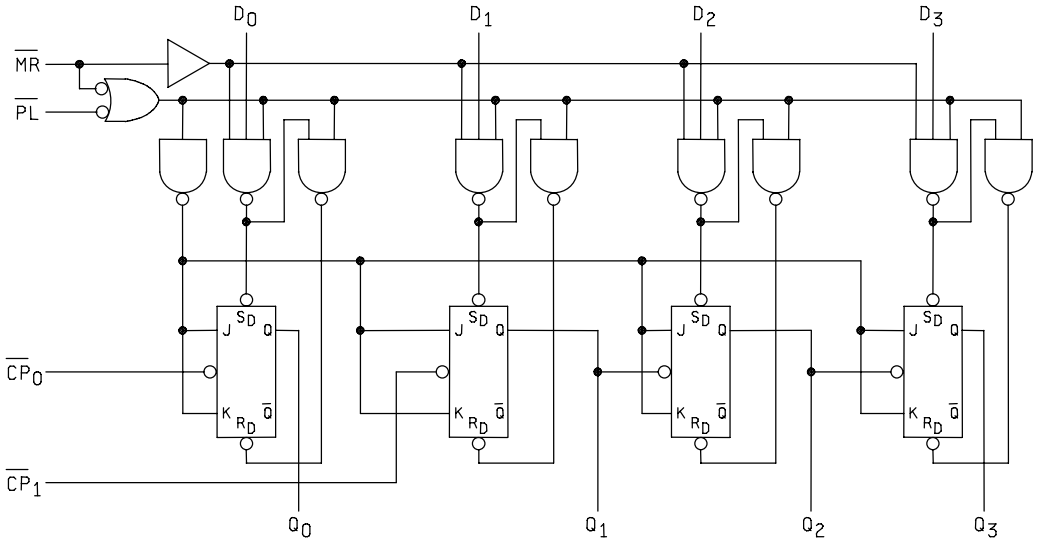

FIGURE 2. Logic diagrams.

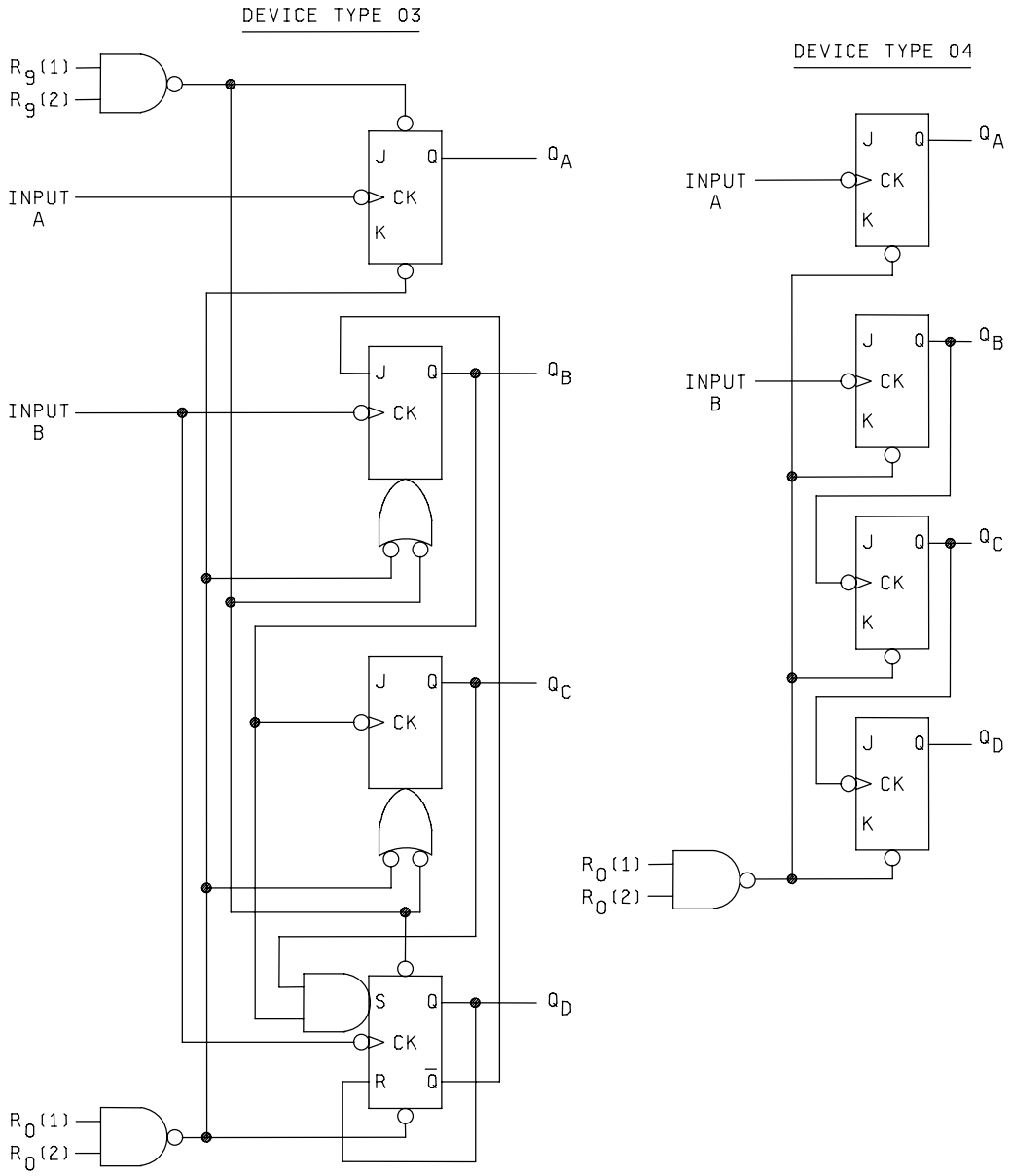

FIGURE 2. Logic diagrams - Continued.

Device type 01

COUNT	OUTPUT			
	QD	QC	QB	QA
0	L	L	L	L
1	L	L	L	H
2	L	L	H	L
3	L	L	H	H
4	L	H	L	L
5	L	H	L	H
6	L	H	H	L
7	L	H	H	H
8	H	L	L	L
9	H	L	L	H

H = high level, L = low level
NOTE A: Output Q0 connected to clock-2 input.

Device type 02

COUNT	OUTPUT			
	QD	QC	QB	QA
0	L	L	L	L
1	L	L	L	H
2	L	L	H	L
3	L	L	H	H
4	L	H	L	L
5	L	H	L	H
6	L	H	H	L
7	L	H	H	H
8	H	L	L	L
9	H	L	L	H
10	H	L	H	L
11	H	L	H	H
12	H	H	L	L
13	H	H	L	H
14	H	H	H	L
15	H	H	H	H

H = high level, L = low level
NOTE A: Output Q0 connected to clock-2 input.

FIGURE 3. Truth tables.

Device type 03

BCD COUNT SEQUENCE
(See note A)

COUNT	OUTPUT			
	QD	QC	QB	QA
0	L	L	L	L
1	L	L	L	H
2	L	L	H	L
3	L	L	H	H
4	L	H	L	L
5	L	H	L	H
6	L	H	H	L
7	L	H	H	H
8	H	L	L	L
9	H	L	L	H

BI-QUINARY (5-2)
(See note B)

COUNT	OUTPUT			
	QA	QD	QC	QB
0	L	L	L	L
1	L	L	L	H
2	L	L	H	L
3	L	L	H	H
4	L	H	L	L
5	H	L	L	L
6	H	L	L	H
7	H	L	H	L
8	H	L	H	H
9	H	H	L	L

RESET/COUNT FUNCTION TABLE

RESET INPUTS				OUTPUT			
R0(1)	R0(2)	R9(1)	R9(2)	QD	QC	QB	QA
H	H	L	X	L	L	L	L
H	H	X	L	L	L	L	L
X	X	H	H	H	L	L	H
X	L	X	L	COUNT			
L	X	L	X	COUNT			
L	X	X	L	COUNT			
X	L	L	X	COUNT			

NOTES:
A. Output QA is connected to input B for BCD count.
B. Output QD is connected to input A for bi-quinary count.

FIGURE 3. Truth tables - Continued.

Device type 04

COUNT SEQUENCE
(See note)

COUNT	OUTPUT			
	QD	QC	QB	QA
0	L	L	L	L
1	L	L	L	H
2	L	L	H	L
3	L	L	H	H
4	L	H	L	L
5	L	H	L	H
6	L	H	H	L
7	L	H	H	H
8	H	L	L	L
9	H	L	L	H
10	H	L	H	L
11	H	L	H	H
12	H	H	L	L
13	H	H	L	H
14	H	H	H	L
15	H	H	H	H

RESET/COUNT FUNCTION TABLE

RESET INPUTS		OUTPUT			
R0(1)	R0(2)	QD	QC	QB	QA
H	H	L	L	L	L
L	X	COUNT			
X	L	COUNT			

NOTE: Output QA is connected to input B.

FIGURE 3. Truth tables - Continued.

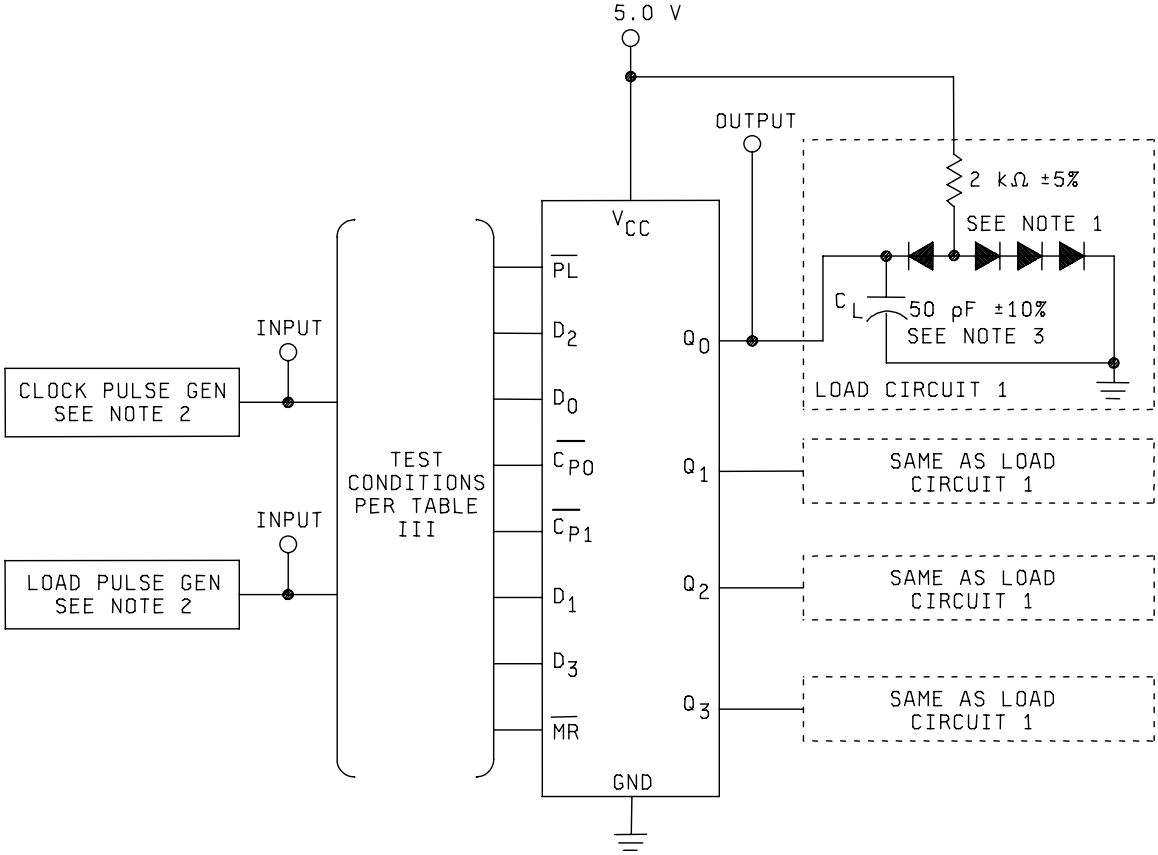

NOTES:

1. All diodes are 1N3064 or equivalent.
2. The pulse generator has the following characteristics: V_{gen} = 3 ±.2 V, $t_r \leq$ 15 ns, $t_f \leq$ 6 ns, $t_{p(IN)}$ = 500 ns, PRR ≤ 1 MHz, $Z_{OUT} \approx$ 50 Ω, F_{max}: $t_r = t_f \leq$ 6 ns.
3. C_L includes probe and jig capacitance.

FIGURE 4. Switching time test circuit and waveforms for device types 01 and 02.

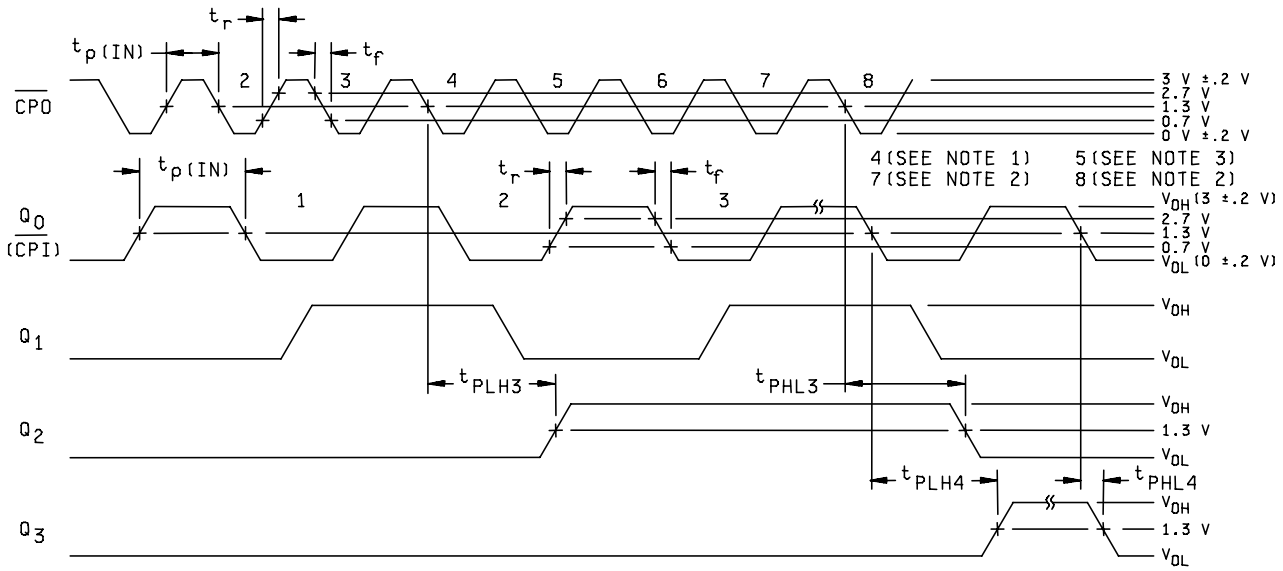

NOTES:

1. Applies to device types 01 and 02 on t_{PLH4} test; device type 01 on t_{PHL4} test.
2. Applies to device type 02 on t_{PHL4} test.
3. Applies to device type 01 on t_{PHL4} test.

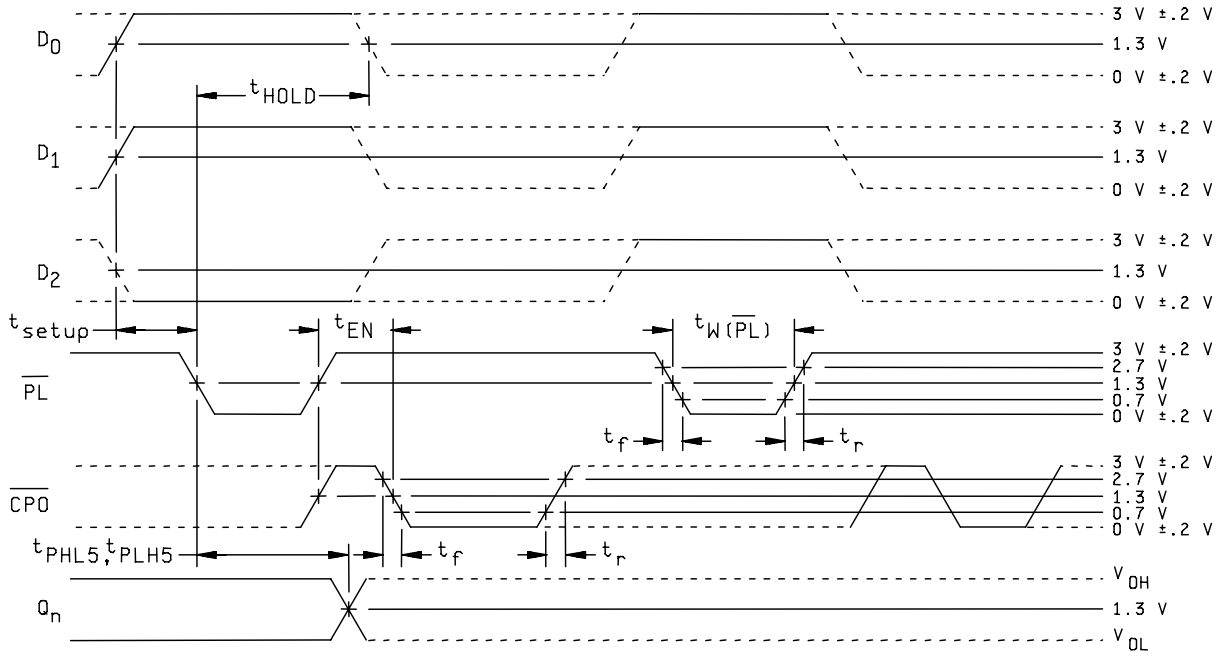

FIGURE 4. Switching time test circuit and waveforms for device types 01 and 02 - Continued.

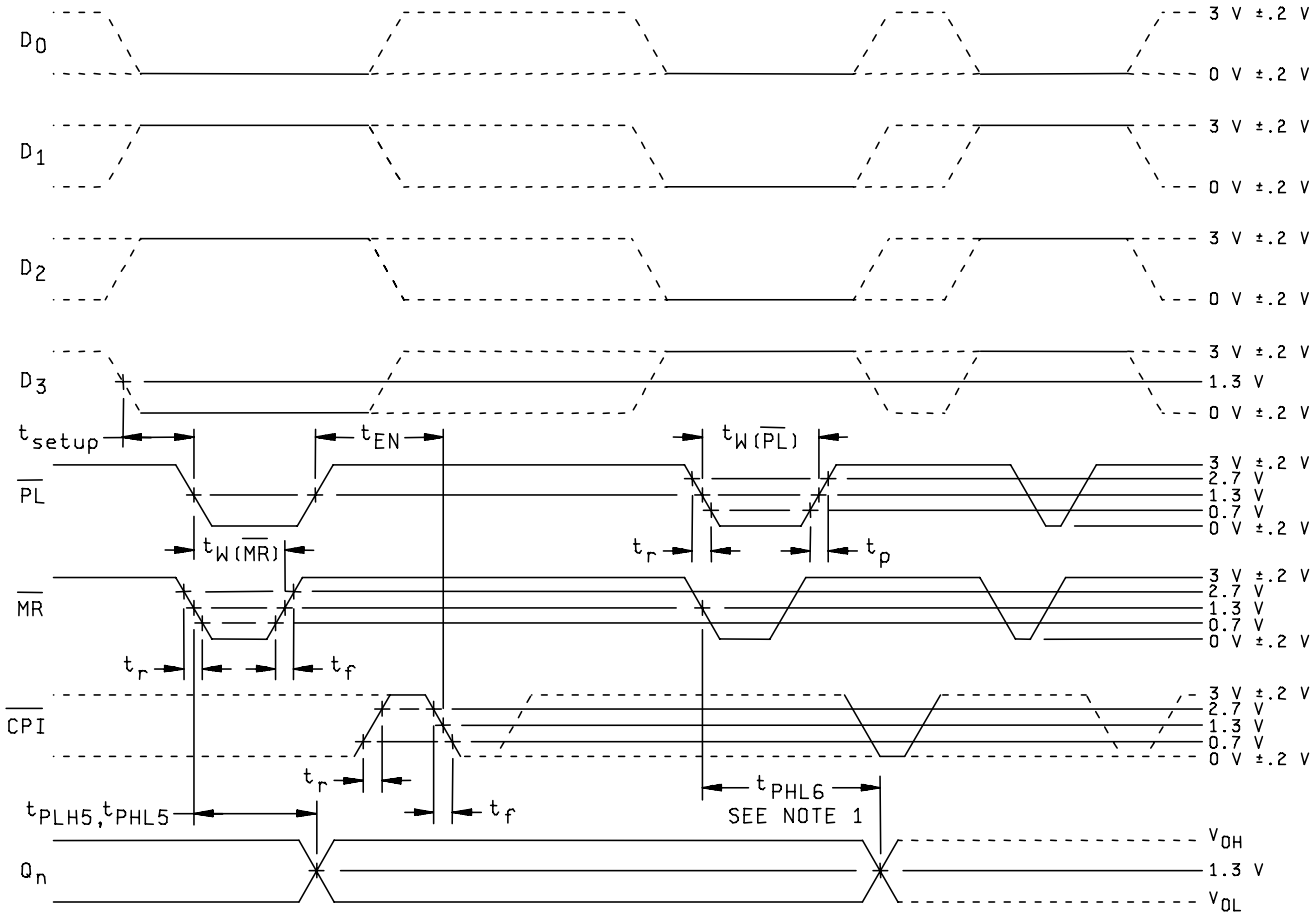

NOTE:
1. For device type 02 only.

FIGURE 4. Switching time test circuit and waveforms for device types 01 and 02 - Continued.

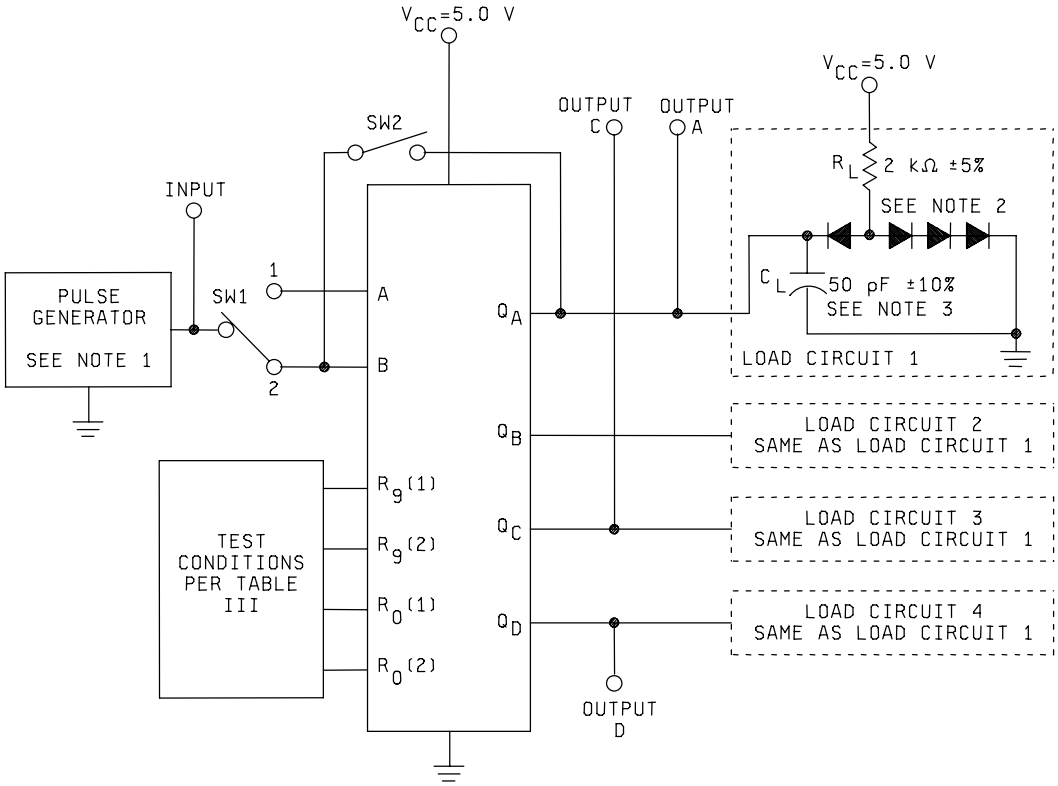

TEST	SWITCH POSITION	
	SW1	SW2
F MAX	1	CLOSED
A TO QC	1	CLOSED
B TO QD	2	OPEN

TEST CIRCUIT

FIGURE 4. Switching time test circuit and waveforms for device type 03 - Continued.

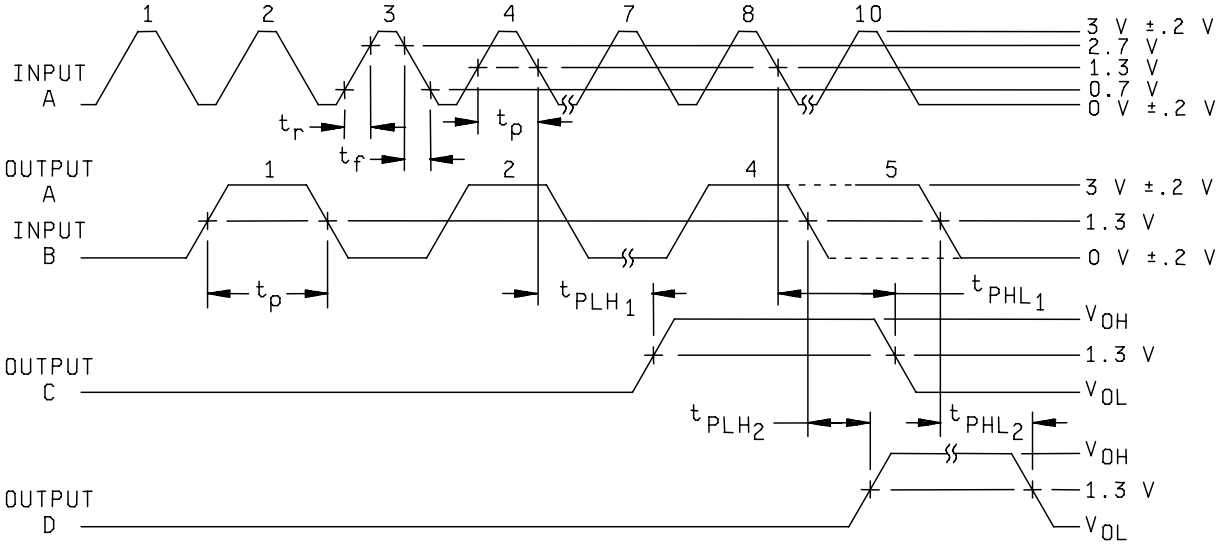

NOTES:

1. The pulse generator has the following characteristics: V_{gen} = 3 V, $t_r \leq 15$ ns, $t_f \leq 6$ ns, t_p = .5 µs, PRR ≤ 1 MHz, $Z_{OUT} \approx 50\ \Omega$.
2. All diodes are 1N3064 or equivalent.
3. C_L includes probe and jig capacitance.
4. Voltage values are with respect to ground terminal.
5. F maximum: $t_r = t_f \leq 6$ ns

FIGURE 4. Switching time test circuit and waveforms for device type 03 - Continued.

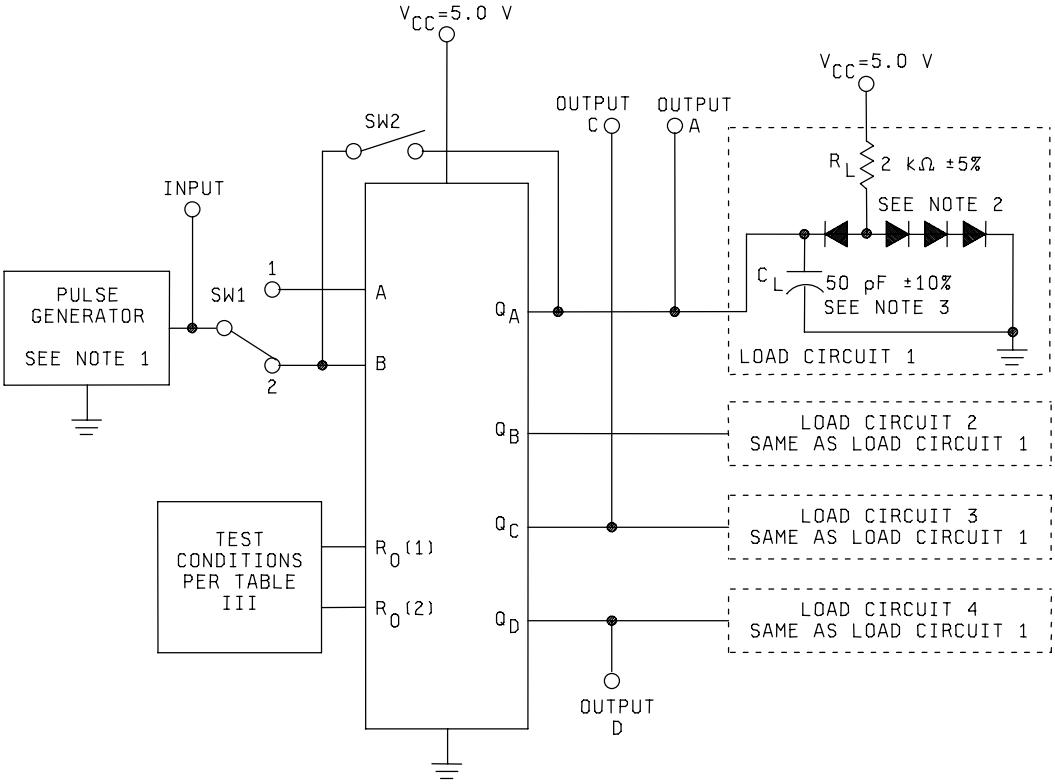

TEST	SWITCH POSITION	
	SW1	SW2
F MAX	1	CLOSED
A TO QC	1	CLOSED
B TO QD	2	OPEN

TEST CIRCUIT

FIGURE 4. Switching time test circuit and waveforms for device type 04 - Continued.

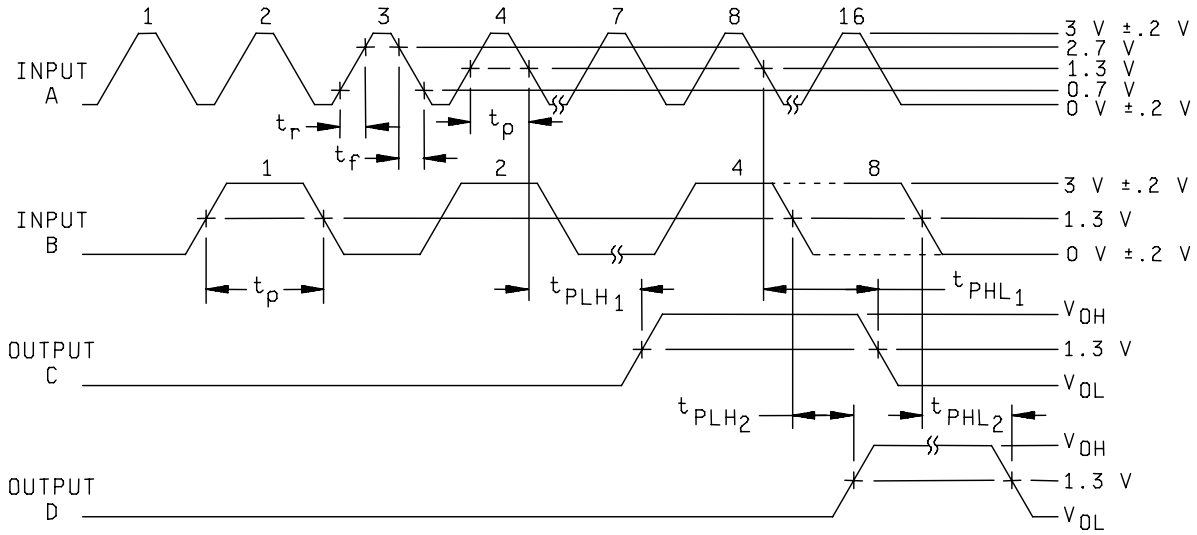

NOTES:

1. The pulse generator has the following characteristics: V_{gen} = 3 V, $t_r \leq$ 15 ns, $t_f \leq$ 6 ns, t_p = .5 μs, PRR ≤ 1 MHz, $Z_{OUT} \approx$ 50 Ω.
2. All diodes are 1N3064 or equivalent.
3. C_L includes probe and jig capacitance.
4. Voltage values are with respect to ground terminal.
5. F maximum: $t_r = t_f \leq$ 6 ns

FIGURE 4. Switching time test circuit and waveforms for device type 04 - Continued.

TABLE III. Group A inspection for device type 01.
Terminal conditions (pins not designated may be high ≥ 2.0 V, or low ≤ 0.7 v, or open).

Subgroup	Symbol	MIL-STD-883 method	Cases A,B,C,D	1	2	3	4	5	6	7	8	9	10	11	12	13	14	Measured terminal	Limits		Unit
			Cases X, 2 1/	2	3	4	6	8	9	10	12	13	14	16	18	19	20				
			Test no.	$\overline{PL}$	Q2	D2	D0	Q0	$\overline{CP1}$	GND	$\overline{CP0}$	Q1	D1	D3	Q3	$\overline{MR}$	V_{CC}		Min	Max	
1 Tc = 25°C	V_{OL}	3007	1					4 mA 2/	2/	GND						0.7 V	4.5 V	Q0		0.4	V
		"	2					2/	"	"		4 mA				"	"	Q1		"	"
		"	3		4 mA			2/	"	"						"	"	Q2		"	"
		"	4					2/	"	"					4 mA	"	"	Q3		"	"
	V_{OH}	3006	5	0.7 V			2.0 V	-.4 mA		"						2.0 V	"	Q0	2.5		"
		"	6	"						"		-.4 mA	2.0 V			"	"	Q1	"		"
		"	7	"	-.4 mA	2.0 V				"						"	"	Q2	"		"
		"	8	"						"				2.0 V	-.4 mA	"	"	Q3	"		"
	V_{IC}		9				-18 mA			"							"	D0		-1.5	"
			10							"			-18 mA				"	D1		"	"
			11			-18 mA				"							"	D2		"	"
			12							"				-18 mA			"	D3		"	"
			13							"	-18 mA						"	$\overline{CP0}$		"	"
			14						-18 mA	"							"	$\overline{CP1}$		"	"
			15							"						-18 mA	"	$\overline{MR}$		"	"
			16	-18 mA						"							"	$\overline{PL}$		"	"
	I_{IH1}	3010	17							"						2.7 V	5.5 V	$\overline{MR}$		40	µA
	I_{IH2}	"	18							"						5.5 V	"	$\overline{MR}$		200	"
	I_{IH7}	"	19	2.7 V						"							"	$\overline{PL}$		20	"
		"	20			2.7 V				"							"	D2		"	"
		"	21				2.7 V			"							"	D0		"	"
		"	22							"			2.7 V				"	D1		"	"
		"	23							"				2.7 V			"	D3		"	"
	I_{IH8}	"	24	5.5 V						"							"	$\overline{PL}$		100	"
		"	25			5.5 V				"							"	D2		"	"
		"	26				5.5 V			"							"	D0		"	"
		"	27							"			5.5 V				"	D1		"	"
		"	28							"				5.5 V			"	D3		"	"
	I_{IH9}	"	29							"	2.7 V						"	$\overline{CP0}$		40	"
	I_{IH10}	"	30							"	5.5 V						"	$\overline{CP0}$		200	"
	I_{IH11}	"	31						2.7 V	"							"	$\overline{CP1}$		80	"
	I_{IH12}	"	32						5.5 V	"							"	$\overline{CP1}$		400	"
	I_{IL1}	3009	33							"						0.4 V	"	$\overline{MR}$	3/	3/	"
	I_{IL4}	"	34	0.4 V						"							"	$\overline{PL}$	"	"	"
		"	35			0.4 V				"							"	D2	"	"	"
		"	36				0.4 V			"							"	D0	"	"	"
		"	37							"			0.4 V				"	D1	"	"	"
		"	38							"				0.4 V			"	D3	"	"	"
	I_{IL5}	"	39							"	0.4 V						"	$\overline{CP0}$	"	"	mA
	I_{IL6}	"	40						0.4 V	"							"	$\overline{CP1}$	"	"	mA

See footnotes at end of device type 02.

TABLE III. Group A inspection for device type 01.

Terminal conditions (pins not designated may be high ≥ 2.0 V, or low ≤ 0.7 v, or open).

Subgroup	Symbol	MIL-STD-883 method	Cases A,B,C,D	1	2	3	4	5	6	7	8	9	10	11	12	13	14	Measured terminal	Limits		Unit
			Cases X, Z 1/	2	3	4	6	8	9	10	12	13	14	16	18	19	20				
			Test no.	$\overline{PL}$	Q2	D2	D0	Q0	$\overline{CP1}$	GND	$\overline{CP0}$	Q1	D1	D3	Q3	$\overline{MR}$	V_{CC}		Min	Max	
1 Tc = 25°C	I_{OS}	3011	41	GND			5.5 V	GND		GND							5.5 V	Q0	-15	-100	mA
		"	42							"		GND	5.5 V				"	Q1	"	"	"
		"	43		GND	5.5 V				"							"	Q2	"	"	"
		"	44							"				5.5 V	GND		"	Q3	"	"	"
	I_{CC}		45	GND		GND	GND		GND	"	GND		GND	GND		GND	"	V_{CC}		27	"
2	Same tests, terminal conditions and limits as for subgroup 1, except T_C = +125°C and V_{IC} tests are omitted.																				
3	Same tests, terminal conditions and limits as for subgroup 1, except T_C = -55°C and V_{IC} tests are omitted.																				
7 Tc = 25°C	Functional tests 5/	3014	46	A 4/	L	A	A	L	A	GND	A	L	A	A	L	B 4/	4.5 V	6/			
		"	47	"	L	B	B	H	B	"	B	H	B	B	"	A	"				
		"	48	"	L	"	B	H	A	"	A	H	B	B	"	"	"				
		"	49	"	H	"	A	L	B	"	B	L	A	A	"	"	"				
		"	50	"	"	"	A	L	A	"	A	L	A	A	"	"	"				
		"	51	"	"	"	B	H	B	"	B	H	B	A	"	"	"				
		"	52	"	"	"	"	H	A	"	A	H	B	A	"	"	"				
		"	53	"	L	A	"	L	B	"	B	L	A	B	H	"	"				
		"	54	"	"	"	"	L	A	"	A	"	"	B	H	"	"				
		"	55	"	"	"	A	H	B	"	B	"	"	A	L	"	"				
		"	56	"	"	"	"	"	A	"	A	"	"	A	L	"	"				
		"	57	B	"	B	"	"	B	"	B	"	B	A	H	"	"				
		"	58	"	"	"	"	"	A	"	A	"	B	A	H	"	"				
		"	59	"	"	"	B	L	B	"	B	H	A	B	L	"	"				
		"	60	"	"	"	B	L	A	"	A	H	A	B	"	"	"				
		"	61	"	H	A	A	H	B	"	B	L	B	B	"	"	"				
		"	62	"	"	"	A	H	A	"	A	L	B	B	"	"	"				
		"	63	"	"	"	B	L	B	"	B	H	A	B	"	"	"				
		"	64	"	"	"	"	"	A	"	A	H	A	B	"	"	"				
		"	65	"	L	B	"	"	B	"	B	L	B	B	"	"	"				
		"	66	"	L	B	"	"	A	"	A	L	B	B	"	"	"				
8	Repeat subgroup 7 at T_C = +125°C and T_C = -55°C.																				
9 Tc = 25°C	f_{MAX}	Fig. 4	67	5.0 V		5.0 V	5.0 V	OUT		GND	IN		5.0 V	5.0 V		5.0 V	5.0 V	$\overline{CP0}$ to Q0 8/	30		MHz
		"	68	5.0 V		5.0 V	5.0 V		IN	"			5.0 V	5.0 V	OUT	"	"	$\overline{CP1}$ to Q3 8/	15		MHz
	t_{PLH3}	3003	69	9/	OUT	9/	9/			"	IN 9/		9/	9/		"	"	$\overline{CP0}$ to Q2	3	77	ns
	t_{PHL3}	Fig. 4 7/	70	10/	OUT	10/	10/			"	IN 10/		10/	10/		"	"	$\overline{CP0}$ to Q2	"	82	"
	t_{PLH4}	"	71	11/		11/	11/		IN 11/	"			11/	11/	OUT	"	"	$\overline{CP1}$ to Q3	"	13/	"
	t_{PHL4}	"	72	12/		12/	12/		IN 12/	"			12/	12/	OUT	"	"	$\overline{CP1}$ to Q3	"	14/	"
	t_{PLH5}	"	73	IN 15/			15/	OUT		"						15/	"	$\overline{PL}$ to Q0	"	35	"
		"	74	IN						"		OUT	15/				"	$\overline{PL}$ to Q1	"	"	"
		"	75	IN	OUT	15/				"							"	$\overline{PL}$ to Q2	"	"	"
		"	76	IN						"				15/	OUT		"	$\overline{PL}$ to Q3	"	"	"

See footnotes at end of device type 02.

TABLE III. Group A inspection for device type 01.

Terminal conditions (pins not designated may be high ≥ 2.0 V, or low ≤ 0.7 v, or open).

Subgroup	Symbol	MIL-STD-883 method	Cases A,B,C,D	1	2	3	4	5	6	7	8	9	10	11	12	13	14	Measured terminal	Limits		Unit
			Cases X, 2 1/	2	3	4	6	8	9	10	12	13	14	16	18	19	20				
			Test no.	$\overline{PL}$	Q2	D2	D0	Q0	$\overline{CP1}$	GND	$\overline{CP0}$	Q1	D1	D3	Q3	$\overline{MR}$	V_{CC}		Min	Max	
9	t_{PHL5}	3003	77	IN 16/			16/	OUT		GND						5.0 V	5.0 V	$\overline{PL}$ to Q0	3	50	ns
Tc = 25°C		7/	78	IN						"		OUT	16/				"	$\overline{PL}$ to Q1	"	"	"
		"	79	IN	OUT	16/				"							"	$\overline{PL}$ to Q2	"	"	"
		"	80	IN						"				16/	OUT		"	$\overline{PL}$ to Q3	"	"	"
10	f_{MAX}	Fig. 4	81	Same terminal conditions as for subgroup 9.														$\overline{CP0}$ to Q0 8/	30		MHz
Tc = 125°C		"	82															$\overline{CP1}$ to Q3 8/	15		MHz
	t_{PLH3}	3003	83															$\overline{CP0}$ to Q2	3	100	ns
	t_{PHL3}	Fig. 4 7/	84															$\overline{CP0}$ to Q2	"	107	"
	t_{PLH4}	"	85															$\overline{CP1}$ to Q3	"	17/	"
	t_{PHL4}	"	86															$\overline{CP1}$ to Q3	"	18/	"
	t_{PLH5}	"	87															$\overline{PL}$ to Q0	"	46	"
		"	88															$\overline{PL}$ to Q1	"	"	"
		"	89															$\overline{PL}$ to Q2	"	"	"
		"	90															$\overline{PL}$ to Q3	"	"	"
	t_{PHL5}	"	91															$\overline{PL}$ to Q0	"	65	"
		"	92															$\overline{PL}$ to Q1	"	"	"
		"	93															$\overline{PL}$ to Q2	"	"	"
		"	94															$\overline{PL}$ to Q3	"	"	"
11	Same tests, terminal conditions, and limits as for subgroup 10, except T_C = -55°C and V_{CC} = 4.5 volts for the f_{MAX} tests.																				

See footnotes at end of device type 02.

TABLE III. Group A inspection for device type 02.
Terminal conditions (pins not designated may be high ≥ 2.0 V, or low ≤ 0.7 v, or open).

Subgroup	Symbol	MIL-STD-883 method	Cases A,B,C,D	1	2	3	4	5	6	7	8	9	10	11	12	13	14	Measured terminal	Limits		Unit
			Cases X, 2 1/	2	3	4	6	8	9	10	12	13	14	16	18	19	20				
			Test no.	$\overline{PL}$	Q2	D2	D0	Q0	$\overline{CP1}$	GND	$\overline{CP0}$	Q1	D1	D3	Q3	$\overline{MR}$	V_{CC}		Min	Max	
1 Tc = 25°C	V_{OL}	3007	1					4 mA 2/	2/	GND						0.7 V	4.5 V	Q0		0.4	V
		"	2					2/	"	"		4 mA				"	"	Q1		"	"
		"	3		4 mA			2/	"	"						"	"	Q2		"	"
		"	4					2/	"	"					4 mA	"	"	Q3		"	"
	V_{OH}	3006	5	0.7 V			2.0 V	-.4 mA		"						2.0 V	"	Q0	2.5		"
		"	6	"						"		-.4 mA	2.0 V				"	Q1	"		"
		"	7	"	-.4 mA	2.0 V				"							"	Q2	"		"
		"	8	"						"				2.0 V	-.4 mA		"	Q3	"		"
	V_{IC}		9				-18 mA			"							"	D0		-1.5	"
			10							"			-18 mA				"	D1		"	"
			11			-18 mA				"							"	D2		"	"
			12							"				-18 mA			"	D3		"	"
			13							"	-18 mA						"	$\overline{CP0}$		"	"
			14						-18 mA	"							"	$\overline{CP1}$		"	"
			15							"						-18 mA	"	$\overline{MR}$		"	"
			16	-18 mA						"							"	$\overline{PL}$		"	"
	I_{IH1}	3010	17							"						2.7 V	5.5 V	$\overline{MR}$		40	µA
	I_{IH2}	"	18							"						5.5 V	"	$\overline{MR}$		200	"
	I_{IH7}	"	19	2.7 V						"							"	$\overline{PL}$		20	"
		"	20			2.7 V				"							"	D2		"	"
		"	21				2.7 V			"							"	D0		"	"
		"	22							"			2.7 V				"	D1		"	"
		"	23							"				2.7 V			"	D3		"	"
	I_{IH8}	"	24	5.5 V						"							"	$\overline{PL}$		100	"
		"	25			5.5 V				"							"	D2		"	"
		"	26				5.5 V			"							"	D0		"	"
		"	27							"			5.5 V				"	D1		"	"
		"	28							"				5.5 V			"	D3		"	"
	I_{IH9}	"	29							"	2.7 V						"	$\overline{CP0}$		40	"
	I_{IH10}	"	30							"	5.5 V						"	$\overline{CP0}$		200	"
	I_{IH11}	"	31						2.7 V	"							"	$\overline{CP1}$		80	"
	I_{IH12}	"	32						5.5 V	"							"	$\overline{CP1}$		400	"
	I_{IL1}	3009	33							"						0.4 V	"	$\overline{MR}$	3/	3/	"
	I_{IL4}	"	34	0.4 V						"							"	$\overline{PL}$	"	"	"
		"	35			0.4 V				"							"	D2	"	"	"
		"	36				0.4 V			"							"	D0	"	"	"
		"	37							"			0.4 V				"	D1	"	"	"
		"	38							"				0.4 V			"	D3	"	"	"
	I_{IL5}	"	39							"	0.4 V						"	$\overline{CP0}$	"	"	mA
	I_{IL6}	"	40						0.4 V	"							"	$\overline{CP1}$	"	"	mA

See footnotes at end of device type 02.

TABLE III. Group A inspection for device type 02.

Terminal conditions (pins not designated may be high ≥ 2.0 V, or low ≤ 0.7 v, or open).

Subgroup	Symbol	MIL-STD-883 method	Cases A,B,C,D	1	2	3	4	5	6	7	8	9	10	11	12	13	14	Measured terminal	Limits		Unit
			Cases X, 2 1/	2	3	4	6	8	9	10	12	13	14	16	18	19	20				
			Test no.	$\overline{PL}$	Q2	D2	D0	Q0	$\overline{CP1}$	GND	$\overline{CP0}$	Q1	D1	D3	Q3	$\overline{MR}$	V_{CC}		Min	Max	
1 Tc = 25°C	I_{OS}	3011	41	GND			5.5 V	GND		GND							5.5 V	Q0	-15	-100	mA
		"	42							"		GND	5.5 V				"	Q1	"	"	"
		"	43		GND	5.5 V				"							"	Q2	"	"	"
		"	44							"				5.5 V	GND		"	Q3	"	"	"
	I_{CC}		45	GND		GND	GND		GND	"	GND		GND	GND		GND	"	V_{CC}		27	"
2	Same tests, terminal conditions and limits as for subgroup 1, except T_C = +125°C and V_{IC} tests are omitted.																				
3	Same tests, terminal conditions and limits as for subgroup 1, except T_C = -55°C and V_{IC} tests are omitted.																				
7 Tc = 25°C	Functional tests 5/	3014	46	A 4/	L	A	A	L	A	GND	A	L	A	A	L	B 4/	4.5 V	6/			
		"	47	"	L	A	B	H	B	"	B	H	B	B	"	A	"				
		"	48	"	L	A	B	H	A	"	A	H	B	B	"	"	"				
		"	49	"	H	B	A	L	B	"	B	L	A	A	"	"	"				
		"	50	"	H	B	A	L	A	"	A	L	A	A	"	"	"				
		"	51	"	H	B	B	H	B	"	B	H	B	A	"	"	"				
		"	52	"	H	B	B	H	A	"	A	H	B	A	"	"	"				
		"	53	"	L	A	A	L	B	"	B	L	A	B	H	"	"				
		"	54	"	L	A	A	L	A	"	A	L	A	B	"	"	"				
		"	55	"	L	A	B	H	B	"	B	H	B	B	"	"	"				
		"	56	"	L	A	B	H	A	"	A	H	B	B	"	"	"				
		"	57	"	H	B	A	L	B	"	B	L	A	B	"	"	"				
		"	58	"	H	B	A	L	A	"	A	L	A	B	"	"	"				
		"	59	"	H	B	B	H	B	"	B	H	B	B	"	"	"				
		"	60	"	H	B	B	H	A	"	A	H	B	B	"	"	"				
		"	61	"	L	A	A	L	B	"	B	L	A	A	L	"	"				
		"	62	"	"	A	A	L	A	"	A	L	A	A	"	"	"				
		"	63	B	"	B	B	L	B	"	B	L	B	B	"	"	"				
		"	64	"	"	B	B	L	A	"	A	L	B	B	"	"	"				
		"	65	"	"	B	A	H	B	"	B	H	A	B	"	"	"				
		"	66	"	"	B	A	H	A	"	A	H	A	B	"	"	"				
		"	67	"	H	A	B	L	B	"	B	L	B	B	"	"	"				
		"	68	"	H	A	B	L	A	"	A	L	B	B	"	"	"				
		"	69	"	H	A	A	H	B	"	B	H	A	B	"	"	"				
		"	70	"	H	A	A	H	A	"	A	H	A	B	"	"	"				
		"	71	"	L	B	B	L	B	"	B	L	B	A	H	"	"				
		"	72	"	L	B	B	L	A	"	A	L	B	A	"	"	"				
		"	73	"	H	A	A	H	B	"	B	H	A	A	"	"	"				
		"	74	"	H	A	A	H	A	"	A	H	A	A	"	"	"				
8	Repeat subgroup 7 at T_C = +125°C and T_C = -55°C.																				
9 Tc = 25°C	f_{MAX}	Fig. 4	75	5.0 V		5.0 V	5.0 V	OUT		GND	IN		5.0 V	5.0 V		5.0 V	5.0 V	$\overline{CP0}$ to Q0 8/	30		MHz
		"	76	5.0 V		5.0 V	5.0 V		IN	"			5.0 V	5.0 V	OUT	"	"	$\overline{CP1}$ to Q3 8/	15		MHz
	t_{PLH3}	3003	77	9/	OUT	9/	9/			"	IN 9/		9/	9/		"	"	$\overline{CP0}$ to Q2	3	77	ns
	t_{PHL3}	Fig. 4 7/	78	10/	OUT	10/	10/			"	IN 10/		10/	10/		"	"	$\overline{CP0}$ to Q2	"	82	"
	t_{PLH4}	"	79	11/		11/	11/		IN 11/	"			11/	11/	OUT	"	"	$\overline{CP1}$ to Q3	"	13/	"

See footnotes at end of device type 02.

TABLE III. Group A inspection for device type 02.

Terminal conditions (pins not designated may be high ≥ 2.0 V, or low ≤ 0.7 V, or open).

Subgroup	Symbol	MIL-STD-883 method	Cases A,B,C,D	1	2	3	4	5	6	7	8	9	10	11	12	13	14	Measured terminal	Limits		Unit
			Cases X, 2 1/	2	3	4	6	8	9	10	12	13	14	16	18	19	20				
			Test no.	$\overline{PL}$	Q2	D2	D0	Q0	$\overline{CP1}$	GND	$\overline{CP0}$	Q1	D1	D3	Q3	$\overline{MR}$	V_{CC}		Min	Max	
9	t_{PHL4}	3003	80	12/		12/	12/		IN 12/	"			12/	12/	OUT	5.0 V	5.0 V	$\overline{CP1}$ to Q3	3	14/	"
Tc = 25°C	t_{PLH5}	7/	81	IN 15/			15/	OUT		"						15/	"	$\overline{PL}$ to Q0	"	35	"
		"	82	"						"		OUT	15/			"	"	$\overline{PL}$ to Q1	"	"	"
		"	83	"	OUT	15/				"						"	"	$\overline{PL}$ to Q2	"	"	"
		"	84	"						"				15/	OUT	"	"	$\overline{PL}$ to Q3	"	"	"
	t_{PHL5}	"	85	IN 16/			16/	OUT		"						5.0 V	"	$\overline{PL}$ to Q0	"	50	ns
		"	86	"						"		OUT	16/				"	$\overline{PL}$ to Q1	"	"	"
		"	87	"	OUT	16/				"							"	$\overline{PL}$ to Q2	"	"	"
		"	88	"						"				16/	OUT		"	$\overline{PL}$ to Q3	"	"	"
	t_{PHL6}	"	89	IN	OUT	3.0 V	3.0 V		GND	"	GND		3.0 V	3.0 V		IN	"	$\overline{MR}$ to Q2	"	35	ns
		"	90	"		"	"	OUT	"	"	"		"	"		"	"	$\overline{MR}$ to Q0	"	"	"
		"	91	"		"	"		"	"	"	OUT	"	"		"	"	$\overline{MR}$ to Q1	"	"	"
		"	92	"		"	"		"	"	"		"	"	OUT	"	"	$\overline{MR}$ to Q3	"	"	"
10	f_{MAX}	Fig. 4	93	Same terminal conditions as for subgroup 9.														$\overline{CP0}$ to Q0 8/	30		MHz
Tc = 125°C		"	94															$\overline{CP1}$ to Q3 8/	15		MHz
	t_{PLH3}	3003	95															$\overline{CP0}$ to Q2	3	100	ns
	t_{PHL3}	Fig. 4 7/	96															$\overline{CP0}$ to Q2	"	107	"
	t_{PLH4}	"	97															$\overline{CP1}$ to Q3	"	17/	"
	t_{PHL4}	"	98															$\overline{CP1}$ to Q3	"	18/	"
	t_{PLH5}	"	99															$\overline{PL}$ to Q0	"	46	"
		"	100															$\overline{PL}$ to Q1	"	"	"
		"	101															$\overline{PL}$ to Q2	"	"	"
		"	102															$\overline{PL}$ to Q3	"	"	"
	t_{PHL5}	"	103															$\overline{PL}$ to Q0	"	65	"
		"	104															$\overline{PL}$ to Q1	"	"	"
		"	105															$\overline{PL}$ to Q2	"	"	"
		"	106															$\overline{PL}$ to Q3	"	"	"
	t_{PHL6}	"	107															$\overline{MR}$ to Q2	"	46	"
		"	108															$\overline{MR}$ to Q0	"	"	"
		"	109															$\overline{MR}$ to Q1	"	"	"
		"	110															$\overline{MR}$ to Q3	"	"	"
11	Same tests, terminal conditions, and limits as for subgroup 10, except T_C = -55°C and V_{CC} = 4.5 volts for the f_{MAX} tests.																				

See footnotes at end of device type 02.

1/ Cases X and 2 pins not referenced are NC.

2/ Input $\overline{CP1}$ shall be connected to Q0 during the V_{OL} test.

3/ I_{IL} limits are as follows:

Test	Min/Max limits for circuits			
	B	C	E	F
I_{IL1}	-320/-800 μA	-180/-410 μA	-280/-760 μA	-120/-360 μA
I_{IL4}	-160/-400 μA	-150/-380 μA	-160/-400 μA	-120/-360 μA
I_{IL5}	-1.0/-2.4 mA	-1.2/-2.6 mA	-0.6/-1.6 mA	-1.0/-2.4 mA
I_{IL6}	-0.4/-1.4 mA	-1.2/-2.6 mA (Device 01)	-0.8/-2.8 mA (Device 01)	-1.3/-3.2 mA (Device 01)
		-.62/-1.35 mA (Device 02)	-0.4/-1.4 mA (Device 02)	-.65/-1.6 mA (Device 02)

4/ A = 2.5 V, B = 0.4 V.

5/ Only a summary of attributes data is required.

6/ Output voltages shall be either:
a. H $\geq$ 1.5 V
b. L $\leq$ 1.5 V

7/ If proper setup is achieved from previous test and conditions, no additional setup is required. (See figure 4). When testing t_{PHL3} or t_{PLH3}, the Q0 pin shall be connected to the $\overline{CP1}$ pin

8/ The f_{MAX} minimum limit is the frequency of the input pulse. Outputs shall be monitored and shall be observed to toggle per the truth table for that device type. Recommended operating conditions (particularly for $t_{p(IN)}$) shall be observed.

9/ Setup to count 3 (Q0 = 1, Q1 = 1, Q2 = 0, Q3 = 0) by either:
a. Serial up count (3 clock pulses; $\overline{PL}$ high).
b. Parallel load to count 3 (D0 = 1, D1 = 1, D2 = 0, D3 = 0; following data setup as shown, make $\overline{PL}$ low, then high.
Following the above setup, apply clock pulse to $\overline{CP0}$ ($\overline{PL}$ high) for test. (See figure 4, connect Q0 to $\overline{CP1}$.)

10/ Setup to count 7 (Q0 = 1, Q1 = 1, Q2 = 1, Q3 = 0) by either:
a. Serial up count (7 clock pulses; $\overline{PL}$ high).
b. Parallel load to count 7 (D0 = 1, D1 = 1, D2 = 1, D3 = 0; following data setup as shown, make $\overline{PL}$ low, then high.
Following the above setup, apply clock pulse to $\overline{CP0}$ ($\overline{PL}$ high) for test. (See figure 4, connect Q0 to $\overline{CP1}$.)

11/ Setup to count 6 (Q0 = 0, Q1 = 1, Q2 = 1, Q3 = 0) by either:
a. Serial up count (3 clock pulses at $\overline{CP1}$, $\overline{PL}$ high).
b. Parallel load to count 6 (D0 = 0, D1 = 1, D2 = 1, D3 = 0; following data setup as shown, make $\overline{PL}$ low, then high.
Following the above setup, apply clock pulse to $\overline{CP1}$ ($\overline{PL}$ high) for test. (See figure 4)

12/ Setup to count 8 (for device type 01) (Q0 = 0, Q1 = 0, Q2 = 0, Q3 = 0) or count 14 (for device type 02) (Q0 = 1, Q1 = 1, Q2 = 0, Q3 = 1) by either;
a. Serial up count (4 clock pulses at $\overline{CP1}$ for device type 01; 7 clock pulses at $\overline{CP1}$ for device type 02; $\overline{PL}$ high).
b. Parallel load to count 8 (D0 = 0, D1 = 0, D2 = 0, D3 = 1) for device type 01 or count 14 (D0 = 0, D1 = 1, D2 = 1, D3 = 1) for device type 02; following data setup as shown, make $\overline{PL}$ low, then high.
Following the above setup, apply clock pulse to $\overline{CP1}$ ($\overline{PL}$ high) for test. (See figure 4)

13/ The maximum limit for device type 01 is 29 ns, 02 is 60 ns.

14/ The maximum limit for device type 01 is 40 ns, 02 is 85 ns.

15/ The output under test must be set to logical 0 previous to test. This may be done by setting $\overline{MR}$ low, then high, or as follows: Dn = low followed by pulse on $\overline{PL}$. Set Dn = high, pulse on $\overline{PL}$ to run test. (See figure 4).

16/ The output under test must be set to logical 1 previous to test. This may be done by setting Dn = high followed by pulse on $\overline{PL}$. Set Dn = low, pulse on $\overline{PL}$ to run test. (See figure 4).

17/ The maximum limit for device type 01 is 38 ns, 02 is 78 ns.

18/ The maximum limit for device type 01 is 52 ns, 02 is 110 ns.

TABLE III. Group A inspection for device type 03.

Terminal conditions (pins not designated may be high ≥ 2.0 V, or low ≤ 0.7 V, or open).

Subgroup	Symbol	MIL-STD-883 method	Cases A,B,C,D	1	2	3	4	5	6	7	8	9	10	11	12	13	14	Measured terminal	Limits		Unit
			Cases X, 2 1/	2	3	4	6	8	9	10	12	13	14	16	18	19	20				
			Test no.	R9(1)	NC	R9(2)	QC	QB	NC	GND	QD	QA	A	B	R0(1)	R0(2)	V_{CC}		Min	Max	
1 Tc = 25°C	V_{OL}	3007	1	GND		GND	4 mA			GND			GND	2.0 V	2.0 V	2.0 V	4.5 V	QC		0.4 V	V
		"	2	"		"		4 mA		"			"	"	"	"	"	QB		"	"
		"	3	2.0 V		0.7 V				"	4 mA		"	"	"	"	"	QD		"	"
		"	4	0.7 V		2.0 V				"		4 mA +	2.0 V	GND	"	"	"	QA		"	"
		"	5	2.0 V		"	4 mA			"		I_{IL3}	GND	2.0 V	"	0.7 V	"	QC		"	"
		"	6	"		"		4 mA		"		(max)	"	"	0.7 V	2.0 V	"	QB		"	"
	V_{OH}	3006	7	"		"				"	-0.4 mA		"	"	2.0 V	0.7 V	"	QD	2.5		"
		"	8	"		"				"		-0.4 mA	2.0 V	GND	0.7 V	2.0 V	"	QA	"		"
		"	9	"		"				"	-0.4 mA		GND	2.0 V	"	0.7 V	"	QD	"		"
		"	10	"		"				"		-0.4 mA	2.0 V	GND	"	"	"	QA	"		"
		"	11	0.7 V		0.7 V	-0.4 mA			"			GND	2/ 3/	2/	2/	"	QC	"		"
		"	12	"		"		-0.4 mA		"			"	2/ 4/	2/	2/	"	QB	"		"
	I_{IL}	3009	13							"					0.4 V	5.5 V	5.5 V	R0(1)	5/	5/	μA
		"	14							"					5.5 V	0.4 V	"	R0(2)	"	"	"
		"	15	0.4 V		5.5 V				"							"	R9(1)	"	"	"
		"	16	5.5 V		0.4 V				"							"	R9(2)	"	"	"
	I_{IL2}	"	17	2/		2/				"			0.4 V		GND	GND	"	A	"	"	mA
	I_{IL3}	"	18	"		"				"				0.4 V	GND	GND	"	B	"	"	"
	V_{IC}		19	-18 mA						"							4.5 V	R9(1)		-1.5	V
			20			-18 mA				"							"	R9(2)		"	"
			21							"			-18 mA				"	A		"	"
			22							"				-18 mA			"	B		"	"
			23							"					-18 mA		"	R0(1)		"	"
			24							"						-18 mA	"	R0(2)		"	"
	I_{IH1}	3010	25	2.7 V						"							5.5 V	R9(1)		20	μA
		"	26			2.7 V				"							"	R9(2)		"	"
		"	27							"					2.7 V		"	R0(1)		"	"
		"	28							"						2.7 V	"	R0(2)		"	"
	I_{IH2}	"	29	5.5 V						"							"	R9(1)		100	"
		"	30			5.5 V				"							"	R9(2)		"	"
		"	31							"					5.5 V		"	R0(1)		"	"
		"	32							"						5.5 V	"	R0(2)		"	"
	I_{IH3}	"	33							"			2.7 V				"	A		80	"
	I_{IH4}	"	34							"			5.5 V				"	A		400	"
	I_{IH5}	"	35							"				2.7 V			"	B		160	"
	I_{IH6}	"	36							"				5.5 V			"	B		800	"
	I_{OS} 6/	3011	37	5.5 V		5.5 V				"	GND				GND	GND	"	QD	-15	-100	mA
		"	38	"		"				"		GND			"	"	"	QA	"	"	"
		"	39	GND		GND		GND		"			GND	2/ 4/	2/	2/	"	QB	"	"	"
		"	40	"		"	GND			"			"	2/ 3/	"	"	"	QC	"	"	"
	I_{CC}		41	"		"				"			"	GND	"	"	"	V_{CC}		15	"
2	Same tests, terminal conditions and limits as for subgroup 1, except T_C = +125° C, and V_{IC} tests are omitted.																				
3	Same tests, terminal conditions and limits as for subgroup 1, except T_C = -55° C, and V_{IC} tests are omitted.																				

See footnotes at end of device type 03.

TABLE III. Group A inspection for device type 03 - Continued.
Terminal conditions (pins not designated may be high ≥ 2.0 V, or low ≤ 0.7 V, or open).

Subgroup	Symbol	MIL-STD-883 method	Cases A,B,C,D	1	2	3	4	5	6	7	8	9	10	11	12	13	14	Measured terminal	Limits		Unit
			Cases X, 2 1/	2	3	4	6	8	9	10	12	13	14	16	18	19	20				
			Test no.	R9(1)	NC	R9(2)	QC	QB	NC	GND	QD	QA	A	B	R0(1)	R0(2)	V_{CC}		Min	Max	
7 Tc = 25°C	Funct-ional tests 7/	3014	42	A 8/		A	L	L		GND	H	H	B 8/	A	A	A	4.5 V	9/			
		"	43	A		A	"	"		"	H	H	"	B	A	A	"				
		"	44	B		B	"	"		"	L	L	"	B	A	A	"				
		"	45	A		A	"	"		"	H	H	"	A	B	B	"				
		"	46	A		A	"	"		"	H	H	"	B	B	B	"				
		"	47	B		B	"	"		"	L	L	"	B	A	A	"				
		"	48	"		B	"	"		"	"	"	"	A	A	"	"				
		"	49	"		A	"	"		"	"	"	"	B	A	"	"				
		"	50	"		"	"	"		"	"	"	"	A	A	"	"				
		"	51	"		"	"	"		"	"	"	"	B	B	"	"				
		"	52	"		"	"	"		"	"	"	"	A	"	"	"				
		"	53	"		"	"	H		"	"	"	"	B	"	"	"				
		"	54	B		A	L	H		"	"	"	"	A	"	"	"				
		"	55	"		"	H	L		"	"	"	"	B	"	"	"				
		"	56	"		"	"	L		"	"	"	"	A	"	"	"				
		"	57	"		"	"	H		"	"	"	"	B	"	"	"				
		"	58	"		"	"	H		"	"	"	"	A	"	"	"				
		"	59	"		"	L	L		"	H	"	"	B	"	"	"				
		"	60	"		"	"	"		"	H	"	"	A	"	"	"				
		"	61	"		"	"	"		"	L	"	"	B	"	"	"				
		"	62	"		B	"	"		"	"	"	"	B	"	B	"				
		"	63	A		"	"	"		"	"	"	"	A	"	"	"				
		"	64	"		"	"	H		"	"	"	"	B	A	"	"				
		"	65	"		"	"	H		"	"	"	"	A	"	"	"				
		"	66	"		"	H	L		"	"	"	"	B	"	"	"				
		"	67	"		"	"	L		"	"	"	"	A	"	"	"				
		"	68	"		"	"	H		"	"	"	"	B	"	"	"				
		"	69	"		"	"	H		"	"	"	"	A	"	"	"				
		"	70	"		"	L	L		"	H	"	"	B	"	"	"				
		"	71	"		"	"	"		"	H	"	"	A	"	"	"				
		"	72	"		"	"	"		"	L	"	"	B	"	"	"				
		"	73	B		"	"	"		"	"	"	"	B	"	"	"				
		"	74	"		"	"	"		"	"	"	"	A	"	"	"				
		"	75	"		A	"	H		"	"	"	"	B	"	"	"				
		"	76	"		"	"	H		"	"	"	"	A	"	"	"				
		"	77	"		"	H	L		"	"	"	"	B	"	"	"				
		"	78	"		"	H	L		"	"	"	"	A	"	"	"				
		"	79	"		"	H	H		"	"	"	"	B	"	"	"				
		"	80	"		B	L	L		"	"	"	"	B	"	A	"				
		"	81	A		"	"	L		"	"	"	"	B	B	"	"				
		"	82	"		"	"	L		"	"	"	"	A	"	"	"				
		"	83	"		"	"	H		"	"	"	"	B	"	"	"				
		"	84	"		"	"	H		"	"	"	"	A	"	"	"				
		"	85	"		"	H	L		"	"	"	"	B	"	"	"				
		"	86	"		"	H	L		"	"	"	"	A	"	"	"				
		"	87	"		"	H	H		"	"	"	"	B	"	"	"				

See footnotes at the end of device type 03.

TABLE III. Group A inspection for device type 03 - Continued.

Terminal conditions (pins not designated may be high ≥ 2.0 V, or low ≤ 0.7 V, or open).

Subgroup	Symbol	MIL-STD-883 method	Cases A,B,C,D	1	2	3	4	5	6	7	8	9	10	11	12	13	14	Measured terminal	Limits		Unit
			Cases X, 2 1/	2	3	4	6	8	9	10	12	13	14	16	18	19	20				
			Test no.	R9(1)	NC	R9(2)	QC	QB	NC	GND	QD	QA	A	B	R0(1)	R0(2)	V_{CC}		Min	Max	
7 Tc = 25°C	Funct-ional tests 7/	3014	88	A		A	L	L		GND	H	H	B	A	B	B	4.5 V	9/			
		"	89	"		B	"	"		"	H	H	"	A	"	B	"				
		"	90	B		"	"	"		"	L	L	"	A	A	A	"				
		"	91	"		"	"	"		"	"	"	"	B	A	A	"				
		"	92	"		"	"	"		"	"	"	"	A	B	B	"				
		"	93	"		"	"	H		"	"	"	"	B	"	"	"				
		"	94	"		"	"	H		"	"	"	"	A	"	"	"				
		"	95	"		"	H	L		"	"	"	"	B	"	"	"				
		"	96	"		"	"	L		"	"	"	"	A	"	"	"				
		"	97	"		"	"	H		"	"	"	"	B	"	"	"				
		"	98	"		"	"	H		"	"	"	"	A	"	"	"				
		"	99	"		"	L	L		"	"	"	"	B	A	A	"				
		"	100	"		"	"	L		"	"	"	"	B	B	B	"				
		"	101	"		"	"	L		"	"	"	"	A	"	"	"				
		"	102	"		"	L	H		"	"	"	"	B	"	"	"				
		"	103	"		"	L	H		"	"	"	"	A	"	"	"				
		"	104	"		"	H	L		"	"	"	"	B	"	"	"				
		"	105	"		"	"	L		"	"	"	"	A	"	"	"				
		"	106	"		"	"	H		"	"	"	"	B	"	"	"				
		"	107	"		"	"	H		"	"	"	"	A	"	"	"				
		"	108	A		A	L	L		"	H	H	"	A	"	"	"				
		"	109	A		A	"	"		"	"	"	"	B	"	"	"				
		"	110	B		B	"	"		"	"	"	"	B	"	"	"				
		"	111	"		"	"	"		"	"	"	"	A	"	"	"				
		"	112	"		"	"	"		"	L	L	"	A	A	A	"				
		"	113	"		"	"	"		"	"	L	"	B	A	A	"				
		"	114	"		"	"	"		"	"	L	A	"	B	B	"				
		"	115	"		"	"	"		"	"	H	B	"	"	"	"				
		"	116	"		"	"	"		"	"	H	A	"	"	"	"				
		"	117	"		"	"	"		"	"	L	B	"	"	"	"				
		"	118	"		"	"	"		"	"	"	A	"	"	A	"				
		"	119	"		"	"	"		"	"	"	B	"	A	A	"				
		"	120	"		"	"	"		"	"	"	A	"	A	B	"				
		"	121	"		A	"	"		"	"	H	B	"	B	"	"				
		"	122	"		A	"	"		"	"	"	A	"	B	"	"				
		"	123	A		A	"	"		"	H	"	B	"	B	"	"				
		"	124	A		B	"	"		"	H	"	A	"	A	"	"				
		"	125	A		A	"	"		"	H	"	B	"	A	A	"				
8	Same tests, terminal conditions, and limits as for subgroup 7, except T_C = +125°C, and T_C = -55°C.																				

See footnotes at the end of device type 03.

TABLE III. Group A inspection for device type 03 - Continued.
Terminal conditions (pins not designated may be high ≥ 2.0 V, or low ≤ 0.7 V, or open).

Subgroup	Symbol	MIL-STD-883 method	Cases A,B,C,D	1	2	3	4	5	6	7	8	9	10	11	12	13	14	Measured terminal	Limits		Unit
			Cases X, 2 1/	2	3	4	6	8	9	10	12	13	14	16	18	19	20				
			Test no.	R9(1)	NC	R9(2)	QC	QB	NC	GND	QD	QA	A	B	R0(1)	R0(2)	V_{CC}		Min	Max	
9	f_{MAX}	Fig. 4	126	GND						GND		OUT	IN 10/		GND		5.0 V	A to QA	29		MHz
Tc = 25°C	t_{PLH1} 11/	"	127	"			OUT			"			IN		12/	A 8/	"	A to QC	3	53	ns
	t_{PHL1} 11/	"	128	"			OUT			"			IN		GND		"	A to QC	"	58	"
	t_{PLH2}	"	129	"						"	OUT			IN	12/	A 8/	"	B to QD	"	37	"
	t_{PHL2}	"	130	"						"	OUT			IN	GND		"	B to QD	"	40	"
10	f_{MAX}	Fig. 4	131	"						"		OUT	IN 10/		GND		"	A to QA	29		MHz
Tc = 125°C	t_{PLH1} 11/	"	132	"			OUT			"			IN		12/	A 8/	"	A to QC	3	74	ns
	t_{PHL1} 11/	"	133	"			OUT			"			IN		GND		"	A to QC	"	81	"
	t_{PLH2}	"	134	"						"	OUT			IN	12/	A 8/	"	B to QD	"	52	"
	t_{PHL2}	"	135	"						"	OUT			IN	GND		"	B to QD	"	56	"
11	Same tests, terminal conditions, and limits as for subgroup 10, except T_C = -55°C.																				

1/ Case X and 2 pins not referenced are NC.
2/ Apply 4.5 V pulse, then ground prior to taking measurements to set device in the desired state.
3/ Apply two pulses after R0 (reset) pulse.
4/ Apply one pulse after R0 (reset) pulse.
5/ I_{IL} limits are as follows:

Test	Min/Max limits for circuits				
	A	B	C	E	F
I_{IL1}	-120/-360 μA	-30/-400 μA	-30/-400 μA	-120/-360 μA	-120/-360 μA
I_{IL2}	-0.5/-2.0 mA	-1.0/-2.4 mA	-1.0/-2.4 mA	-0.5/-2.0 mA	-1.0/-2.4 mA
I_{IL3}	-0.8/-3.2 mA	-1.4/-3.2 mA	-1.4/-3.2 mA	-0.8/-3.2 mA	-0.8/-3.2 mA

6/ I_{OS} limits for circuit C are -30/-130 mA.
7/ Only a summary of attributes data is required.
8/ A = 2.5 V minimum, B = 0.4 V.
9/ Output voltages shall be either:
   a. H ≥ 1.5 V
   b. L ≤ 1.5 V
10/ f_{MAX} minimum limit specified is the frequency of the input pulse. The output frequency shall be one half of the input frequency.
11/ When testing t_{PHL1} or t_{PLH1}, the QA pin shall be connected to the input B pin.
12/ Momentary 3.0 V (min), then ground. Maintain ground for measurement.

TABLE III. Group A inspection for device type 04.

Terminal conditions (pins not designated may be high ≥ 2.0 V, or low ≤ 0.7 V, or open).

Subgroup	Symbol	MIL-STD-883 method	Cases A,B,C,D	1	2	3	4	5	6	7	8	9	10	11	12	13	14	Measured terminal	Limits		Unit
			Cases X, 2 1/	2	3	4	6	8	9	10	12	13	14	16	18	19	20				
			Test no.	NC	NC	NC	QC	QB	NC	GND	QD	QA	A	B	R0(1)	R0(2)	V_{CC}		Min	Max	
1 Tc = 25°C	V_{OL}	3009	1							GND		4 mA +	2.0 V	GND	2.0 V	2.0 V	4.5 V	QA		0.4	V
		"	2					4 mA		"		I_{IL3}	GND	2.0 V	"	"	"	QB		"	"
		"	3				4 mA			"		(max)	"	"	"	"	"	QC		"	"
		"	4							"	4 mA		"	"	"	"	"	QD		"	"
	V_{OH}	3006	5							"		-0.4mA	2/ 3/	GND	2/	2/	"	QA	2.5		"
		"	6					-0.4mA		"			GND	2/ 3/	"	"	"	QB	"		"
		"	7				-0.4 mA			"			"	2/ 4/	"	"	"	QC	"		"
		"	8							"	-0.4 mA		"	2/ 5/	"	"	"	QD	"		"
	V_{IC}		9							"			-18 mA				"	A		-1.5	"
			10							"				-18 mA			"	B		"	"
			11							"					-18 mA		"	R0(1)		"	"
			12							"						-18 mA	"	R0(2)		"	"
	I_{IL1}	3009	13							"					0.4 V	5.5 V	5.5 V	R0(1)	6/	6/	µA
		"	14							"					5.5 V	0.4 V	"	R0(2)	"	"	"
	I_{IL2}	"	15							"			0.4 V		2/	2/	"	A	"	"	mA
	I_{IL3}	"	16							"				0.4 V	"	"	"	B	"	"	"
	I_{IH1}	3010	17							"					2.7 V	GND	"	R0(1)		20	µA
		"	18							"					GND	2.7 V	"	R0(2)		"	"
	I_{IH2}	"	19							"					5.5 V	GND	"	R0(1)		100	"
		"	20							"					GND	5.5 V	"	R0(2)		"	"
	I_{IH3}	"	21							"			2.7 V		5.5 V	5.5 V	"	A		80	"
	I_{IH4}	"	22							"			5.5 V		"	"	"	A		400	"
	I_{IH5}	"	23							"				2.7 V	"	"	"	B		80	"
	I_{IH6}	"	24							"				5.5 V	"	"	"	B		400	"
	I_{OS} 7/	3011	25							"		GND	2/ 3/	GND	2/	2/	"	QA	-15	-100	mA
		"	26					GND		"			GND	2/ 3/	"	"	"	QB	"	"	"
		"	27				GND			"				2/ 4/	"	"	"	QC	"	"	"
		"	28							"	GND			2/ 5/	"	"	"	QD	"	"	"
	I_{CC}	3005	29							"				GND			"	V_{CC}		15	"
2	Same tests, terminal conditions and limits as for subgroup 1, except T_C = +125°C and V_{IC} tests are omitted.																				
3	Same tests, terminal conditions and limits as for subgroup 1, except T_C = -55°C and V_{IC} tests are omitted.																				
7 Tc = 25°C	Funct-ional tests 8/	3014	30				L	L		GND	L	L	B 8/	B	A 8/	A	4.5 V	9/			
		"	31				"	"		"	"	"	"	A	"	A	"				
		"	32				"	"		"	"	"	"	B	"	A	"				
		"	33				"	"		"	"	"	"	B	"	B	"				
		"	34				"	"		"	"	"	"	A	"	B	"				
		"	35				"	H		"	"	"	"	B	"	B	"				
		"	36				"	L		"	"	"	"	B	"	A	"				
		"	37				"	"		"	"	"	"	B	B	A	"				
		"	38				"	"		"	"	"	"	A	"	A	"				
		"	39				"	"		"	"	"	"	A	"	B	"				
		"	40				"	H		"	"	"	"	B	"	"	"				

See footnotes at the end of device type 04.

TABLE III. Group A inspection for device type 04.

Terminal conditions (pins not designated may be high ≥ 2.0 V, or low ≤ 0.7 V, or open).

Subgroup	Symbol	MIL-STD-883 method	Cases A,B,C,D	1	2	3	4	5	6	7	8	9	10	11	12	13	14	Measured terminal	Limits		Unit
			Cases X, 2 1/	2	3	4	6	8	9	10	12	13	14	16	18	19	20				
			Test no.	NC	NC	NC	QC	QB	NC	GND	QD	QA	A	B	R0(1)	R0(2)	V_{CC}		Min	Max	
7 Tc = 25°C	Funct-ional tests 8/	3014	41				L	H		GND	L	L	B 8/	A	B	B	4.5 V	9/			
		"	42				H	L		"	"	"	"	B	"	"	"				
		"	43				"	L		"	"	"	"	A	"	"	"				
		"	44				"	H		"	"	"	"	B	"	"	"				
		"	45				"	H		"	"	"	"	A	"	"	"				
		"	46				L	L		"	H	"	"	B	"	"	"				
		"	47				"	L		"	"	"	"	A	"	"	"				
		"	48				"	H		"	"	"	"	B	"	"	"				
		"	49				"	H		"	"	"	"	A	"	"	"				
		"	50				H	L		"	"	"	"	B	"	"	"				
		"	51				"	L		"	"	"	"	A	"	"	"				
		"	52				"	H		"	"	"	"	B	"	"	"				
		"	53				"	H		"	"	"	"	A	"	"	"				
		"	54				L	L		"	L	"	"	B	"	"	"				
		"	55				"	L		"	"	"	"	A	"	"	"				
		"	56				"	H		"	"	"	"	B	"	"	"				
		"	57				"	H		"	"	"	"	A	"	"	"				
		"	58				H	L		"	"	"	"	B	"	"	"				
		"	59				H	L		"	"	"	"	A	"	"	"				
		"	60				H	H		"	"	"	"	B	"	"	"				
		"	61				H	H		"	"	"	"	A	"	"	"				
		"	62				L	L		"	H	"	"	B	"	"	"				
		"	63				"	L		"	"	"	"	A	"	"	"				
		"	64				"	H		"	"	"	"	B	"	"	"				
		"	65				"	H		"	"	"	"	B	A	"	"				
		"	66				"	H		"	"	"	"	A	"	"	"				
		"	67				H	L		"	"	"	"	B	"	"	"				
		"	68				"	L		"	"	"	"	A	"	"	"				
		"	69				"	H		"	"	"	"	B	"	"	"				
		"	70				"	H		"	"	"	"	A	"	"	"				
		"	71				L	L		"	L	"	"	A	"	A	"				
		"	72				"	"		"	"	"	"	B	"	A	"				
		"	73				"	"		"	"	"	A	"	B	B	"				
		"	74				"	"		"	"	H	B	"	"	"	"				
		"	75				"	"		"	"	H	A	"	"	"	"				
		"	76				"	"		"	"	L	B	"	"	"	"				
8	Same tests, terminal conditions, and limits as for subgroup 7, except T_C = +125°C, and T_C = -55°C.																				

TABLE III. Group A inspection for device type 04.

Terminal conditions (pins not designated may be high ≥ 2.0 V, or low ≤ 0.7 V, or open).

Subgroup	Symbol	MIL-STD-883 method	Cases A,B,C,D	1	2	3	4	5	6	7	8	9	10	11	12	13	14	Measured terminal	Limits		Unit
			Cases X, 2 1/	2	3	4	6	8	9	10	12	13	14	16	18	19	20				
			Test no.	NC	NC	NC	QC	QB	NC	GND	QD	QA	A	B	R0(1)	R0(2)	V_{CC}		Min	Max	
9	f_{MAX}	Fig. 4	77							"		OUT	IN 10/		GND		5.0 V	A to QA	29		MHz
Tc = 25°C	t_{PLH1} 11/	3003 Fig. 4	78				OUT			"			IN		12/	A 8/	"	A to QC	3	53	ns
	t_{PHL1} 11/	"	79				OUT			"			IN		GND		"	A to QC	"	58	"
	t_{PLH2}	"	80							"	OUT			IN	12/	A 8/	"	B to QD	"	56	"
	t_{PHL2}	"	81							"	OUT			IN	GND		"	B to QD	"	56	"
10	f_{MAX}	Fig. 4	82							"		OUT	IN 10/		GND		"	A to QA	29		MHz
Tc = 125°C	t_{PLH1} 11/	3003 Fig. 4	83				OUT			"			IN		12/	A 8/	"	A to QC	3	74	ns
	t_{PHL1} 11/	"	84				OUT			"			IN		GND		"	A to QC	"	81	"
	t_{PLH2}	"	85							"	OUT			IN	12/	A 8/	"	B to QD	"	78	"
	t_{PHL2}	"	86							"	OUT			IN	GND		"	B to QD	"	78	"
11	Same tests, terminal conditions, and limits as for subgroup 10, except T_C = -55°C.																				

1/ Case X and 2 pins not referenced are NC.
2/ Apply 4.5 V pulse, then ground prior to taking measurements to set device in the desired state. Maintain ground measurement.
3/ Input pulse must be applied one time after R0 pulse.
4/ Input pulse must be applied twice after R0 pulse.
5/ Input pulse must be applied four times after R0 pulse.
6/ I_{IL} limits are as follows:

Test	Min/Max limits for circuits				
	A	B	C	E	F
I_{IL1}	-120/-360 μA	-30/-400 μA	-30/-400 μA	-120/-360 μA	-120/-400 μA
I_{IL2}	-0.5/-2.0 mA	-1.0/-2.4 mA	-1.0/-2.4 mA	-0.5/-2.0 mA	-1.0/-2.4 mA
I_{IL3}	-0.4/-1.6 mA	-0.4/-1.6 mA	-0.7/-3.2 mA	-0.4/-1.6 mA	-.65/-1.6 mA

7/ I_{OS} limits for circuit C are -30/-130 mA.
8/ A = 2.5 V minimum, B = 0.4 V.
9/ Output voltages shall be either:
  a. H ≥ 1.5 V
  b. L ≤ 1.5 V
10/ f_{MAX} minimum limit specified is the frequency of the input pulse. The output frequency shall be one half of the input frequency.
11/ When testing t_{PHL1} or t_{PLH1}, the QA pin shall be connected to the input B pin.
12/ Momentary 3.0 V (min), then ground. Maintain ground for measurement.

5. PACKAGING

5.1 Packaging requirements. For acquisition purposes, the packaging requirements shall be as specified in the contract or order (see 6.2). When actual packaging of materiel is to be performed by DoD personnel, these personnel need to contact the responsible packaging activity to ascertain requisite packaging requirements. Packaging requirements are maintained by the Inventory Control Point's packaging activity within the Military Department of Defense Agency, or within the Military Department's System Command. Packaging data retrieval is available from the managing Military Department's or Defense Agency's automated packaging files, CD-ROM products, or by contacting the responsible packaging activity.

6. NOTES

(This section contains information of a general or explanatory nature which may be helpful, but is not mandatory.)

6.1 Intended use. Microcircuits conforming to this specification are intended for original equipment design applications and logistic support of existing equipment.

6.2 Acquisition requirements. Acquisition documents should specify the following:

a. Title, number, and date of the specification.
b. PIN and compliance identifier, if applicable (see 1.2).
c. Requirements for delivery of one copy of the conformance inspection data pertinent to the device inspection lot to be supplied with each shipment by the device manufacturer, if applicable.
d. Requirement for certificate of compliance, if applicable.
e. Requirements for notification of change of product or process to acquiring activity in addition to notification to the qualifying activity, if applicable.
f. Requirements for failure analysis (including required test condition of method 5003), corrective action and reporting of results, if applicable.
g. Requirements for product assurance options.
h. Requirements for carriers, special lead lengths or lead forming, if applicable. These requirements shall not affect the part number. Unless otherwise specified, these requirements will not apply to direct purchase by or direct shipment to the Government.
i. Requirements for "JAN" marking.
j. Packaging requirements (see 5.1).

6.3 Superseding information. The requirements of MIL-M-38510 have been superseded to take advantage of the available Qualified Manufacturer Listing (QML) system provided by MIL-PRF-38535. Previous references to MIL-M-38510 in this document have been replaced by appropriate references to MIL-PRF-38535. All technical requirements now consist of this specification and MIL-PRF-38535. The MIL-M-38510 specification sheet number and PIN have been retained to avoid adversely impacting existing government logistics systems and contractor's parts lists.

6.4 Qualification. With respect to products requiring qualification, awards will be made only for products which are, at the time of award of contract, qualified for inclusion in Qualified Manufacturers List QML-38535 whether or not such products have actually been so listed by that date. The attention of the contractors is called to these requirements, and manufacturers are urged to arrange to have the products that they propose to offer to the Federal Government tested for qualification in order that they may be eligible to be awarded contracts or purchase orders for the products covered by this specification. Information pertaining to qualification of products may be obtained from DSCC-VQ, 3990 E. Broad Street, Columbus, Ohio 43123-1199. An online listing of products qualified to this specification may be found in the Qualified Products Database (QPD) at http://assist.daps.dla.mil.

6.5 Abbreviations, symbols, and definitions. The abbreviations, symbols, and definitions used herein are defined in MIL-PRF-38535, MIL-HDBK-1331, and as follows:

GND ..... Ground zero voltage potential
I_{IN} ..... Current flowing into an input terminal
V_{IN} ..... Voltage level at an input terminal

6.6 Logistic support. Lead materials and finishes (see 3.4) are interchangeable. Unless otherwise specified, microcircuits acquired for Government logistic support will be acquired to device class B (see 1.2.2), lead material and finish A (see 3.4). Longer length leads and lead forming should not affect the part number.

6.7 Substitutability. The cross-reference information below is presented for the convenience of users. Microcircuits covered by this specification will functionally replace the listed generic-industry type. Generic-industry microcircuit types may not have equivalent operational performance characteristics across military temperature ranges or reliability factors equivalent to MIL-M-38510 device types and may have slight physical variations in relation to case size. The presence of this information should not be deemed as permitting substitution of generic-industry types for MIL-M-38510 types or as a waiver of any of the provisions of MIL-PRF-38535.

Military device type	Generic-industry type
01	54LS196
02	54LS197
03	54LS290
04	54LS293

6.8 Manufacturers' designation. Manufacturers' circuits which form a part of this specification are designated with an "X" as shown in table IV herein.

TABLE IV. Manufacturers' designations.

Device type	Circuits				
	A	B	C	E	F
	Texas Instruments	Signetics Corp.	National Semiconductor Corp.	Motorola Inc.	Fairchild Semiconductor
01		X	X		X
02		X	X	X	X
03	X	X	X	X	X
04	X	X	X	X	X

6.9 Amendment notations. The margins of this specification are marked with vertical lines to indicate modifications generated by this amendment. This was done as a convenience only and the Government assumes no liability whatsoever for any inaccuracies in these notations. Bidders and contractors are cautioned to evaluate the requirements of this document based on the entire content irrespective of the marginal notations.

Custodians:
Army - CR
Navy - EC
Air Force - 85
DLA - CC

Review activities:
Army - MI, SM
Navy - AS, CG, MC, SH, TD
Air Force - 03, 19, 99

Preparing activity:
DLA - CC

(Project 5962-2008-006)

NOTE: The activities listed above were interested in this document as of the date of this document. Since organizations and responsibilities can change, you should verify the currency of the information above using the ASSIST Online database at http://assist.daps.dla.mil.