QUALIFICATION REQUIREMENTS REMOVED

MIL-M-38510/29C
16 April 1984
SUPERSEDING
MIL-M-38510/29B(USAF)
20 October 1975

MILITARY SPECIFICATION

MICROCIRCUITS, DIGITAL, TTL, LOW POWER DECODERS, MONOLITHIC SILICON

INACTIVE FOR NEW DESIGN AFTER DATE OF THIS REVISION

This specification is approved for use by all Departments and Agencies of the Department of Defense.

1. SCOPE

1.1 Scope. This specification covers the detail requirements for monolithic silicon, TTL, low power microcircuits decoders. One product assurance class and a choice of case outlines, and lead finishes are provided for each type and are reflected in the complete part number.

1.2 Part number. The complete part number shall be as specified in MIL-M-38510, with the exception that the "JAN" or "J" certification shall not be used.

1.2.1 Device type. The device type shall be as follows:

Device type	Circuit
01	BCD-to-decimal decoder
02	Excess-3-to-decimal decoder
03	Excess-3-gray-to-decimal decoder
04	BCD-to-seven-segment decoder/driver (30-volt, open collector output)
05	BCD-to-seven-segment decoder/driver (15-volt, open collector output)
06	BCD-to-decimal decoder
07	One-of-ten decoder

1.2.2 Device class. The device class shall be the product assurance level as defined in MIL-M-38510.

1.2.3 Case outline. The case outline shall be designated as follows:

Outline letter	Case outline (see MIL-M-38510, appendix C)
E	D-2 (16-lead, 1/4" x 7/8"), dual-in-line package
F	F-5 (16-lead, 1/4" x 3/8"), flat package

1.3 Absolute maximum ratings.

Supply voltage range- - - - - - - - - - - - -	-0.5 V dc to +7.0 V dc
Input voltage range:	
Device types 01 through 05 - - - - - - - -	-1.5 V dc at -12 mA to 5.5 V dc
Device type 06 - - - - - - - - - - - - - -	0.0 to 5.5 V dc
Device type 07 - - - - - - - - - - - - - -	-1.5 V dc at -10 mA to 5.5 V dc
Storage temperature range - - - - - - - - - -	-65°C to +150°C

Beneficial comments (recommendations, additions, deletions) and any pertinent data which may be of use in improving this document should be addressed to: Rome Air Development Center (RBE-2), Griffiss AFB, NY 13441, by using the self-addressed Standardization Document Improvement Proposal (DD Form 1426) appearing at the end of this document or by letter.

FSC 5962

1.3 Absolute maximum ratings. - Continued

Maximum power dissipation (P_D) 1/:	
Device types 01, 02 and 03 - - - - - - - - -	121 mWdc
Device types 04 and 05 - - - - - - - - - - -	237 mWdc
Device type 06 - - - - - - - - - - - - - - -	30 mWdc
Device type 07 - - - - - - - - - - - - - - -	72 mWdc
Lead temperature (soldering, 10 seconds)- - -	+300°C
Thermal resistance, junction-to-case (θ_{JC}):	
Case E -	0.08°C/mW
Case F -	0.15°C/mW
Junction temperature (T_J) - - - - - - - - - -	+175°C
Maximum current into any output (output off):	
Device types 04 and 05- - - - - - - - - - - -	1 mA

1.4 Recommended operating conditions.

Supply voltage(V_{CC}) - - - - - - - - - - - - - -	4.5 V dc minimum to 5.5 V dc maximum
Minimum high-level input voltage (V_{IH})- - - -	2.0 V dc
Maximum low-level input voltage (V_{IL}) - - - -	0.8 V dc
Sink-current capability by device type:	
Device types 01, 02, and 03 - - - - - - - - -	8 mA
Device types 04 and 05 output a-g - - - -	20 mA
BI/RBO mode - - - -	4 mA
Device type 06- - - - - - - - - - - - - - - - -	2 mA
Device type 07- - - - - - - - - - - - - - - - -	4 mA
Case operating temperature range (T_C) - - - -	-55°C to +125°C

2. APPLICABLE DOCUMENTS

2.1 Government specifications and standards. Unless otherwise specified, the following specifications and standards, of the issue listed in that issue of the Department of Defense Index of Specifications and Standards specified in the solicitation, form a part of this specification to the extent specified herein.

SPECIFICATION

MILITARY

MIL-M-38510 - Microcircuits, General Specification for.

STANDARD

MILITARY

MIL-STD-883 - Test Methods and Procedures for Microelectronics.

(Copies of specifications, standards, handbooks, drawings, and publications required by manufacturers in connection with specific acquisition functions should be obtained from the contracting activity or as directed by the contracting officer.)

2.2 Order of precedence. In the event of a conflict between the text of this specification and the references cited herein, the text of this specification shall take precedence.

3. REQUIREMENTS

3.1 Detail specification. The individual item requirements shall be in accordance with MIL-M-38510, and as specified herein.

3.2 Design, construction, and physical dimensions. The design, construction, and physical dimensions shall be as specified in MIL-M-38510 and herein.

1/ Must withstand the added P_D due to short circuit condition (e.g., I_{OS}) at one output for 5 seconds duration.

TABLE I. Electrical performance characteristics, device types 01, 02, and 03.

Test	Symbol	Conditions	Limits		Units
			Min	Max	
High-level output voltage	V_{OH}	V_{CC} = 4.5 V, I_{OH} = -0.4 mA V_{IN} = 0.8 V and 2.0 V	2.4	---	Volts
Low-level output voltage	V_{OL}	V_{CC} = 4.5 V, I_{OL} = 8 mA V_{IN} = 0.8 V and 2.0 V	---	0.4	Volts
Input clamp voltage	V_{IC}	V_{CC} = 4.5 V, I_{IN} = -12 mA	---	-1.5	Volts
Low-level input current	I_{IL}	V_{CC} = 5.0 V, V_{IN} = 0.4 V 1/	-0.4	-0.8	mA
High-level input current	I_{IH1}	V_{CC} = 5.0 V, V_{IN} = 2.4 V 2/	---	20	µA
High-level input current	I_{IH2}	V_{CC} = 5.0 V, V_{IN} = 5.5 V 2/	---	100	µA
Short-circuit output current	I_{OS}	V_{CC} = 5.0 V, V_{IN} = 0 V and 4.5 V 3/	-9	-28	mA
Supply current	I_{CC}	V_{CC} = 5.0 V, V_{IN} = 0 V 3/	---	22	mA
Propagation delay time through two logic levels	t_{PHL}	C_L = 50 pF minimum R_L = 800 Ω ±5% (Figure 5)	10	70	ns
Propagation delay time through two logic levels	t_{PLH}		10	70	ns
Propagation delay time through three logic levels	t_{PHL}		10	85	ns
Propagation delay time through three logic levels	t_{PLH}		10	85	ns

1/ All unspecified inputs at 5.5 volts.

2/ All unspecified inputs grounded.

3/ Not more than one output should be shorted at one time.

TABLE I. Electrical performance characteristics, device types 04 and 05.

Test	Symbol	Conditions	Limits		Units
			Min	Max	
Low-level output voltage 4/	V_{OL1}	V_{CC} = 4.5 V, I_{OL} = 20 mA V_{IN} = 0.8 V and 2.0 V	---	0.4	Volts
Low-level output voltage 5/	V_{OL2}	V_{CC} = 4.5 V, I_{OL} = 4 mA V_{IN} = 0.8 V and 2.0 V	---	0.4	Volts
Input clamp voltage	V_{IC}	V_{CC} = 4.5 V, I_{IN} = -12 mA	---	-1.5	Volts
High-level output voltage 5/	V_{OH}	V_{CC} = 4.5 V, I_{OH} = -0.1 mA V_{IN} = 0.8 V and 2.0 V	2.4	---	Volts
Maximum collector cut-off current 4/	I_{CEX}	V_{CC} = 4.5 V, V_{OH} = max 3/ V_{IN} = 0.8 V and 2.0 V	---	250	µA
Low-level input current 6/	I_{IL1}	V_{CC} = 5.0 V 1/ V_{IN} = 0.4 V	-0.4	-0.8	mA
Low-level input current 5/	I_{IL2}	V_{CC} = 5.0 V 1/ V_{IN} = 0.4 V	-1.0	-2.1	mA
High-level input current 6/	I_{IH1}	V_{CC} = 5.0 V 2/ V_{IN} = 2.4 V	---	20	µA
High-level input current 6/	I_{IH2}	V_{CC} = 5.0 V 2/ V_{IN} = 5.5 V	---	100	µA
Short-circuit output current 5/	I_{OS}	V_{CC} = 5.0 V 2/	---	-4	mA
Supply current	I_{CC}	V_{CC} = 5.0 V, V_{IN} = 5.5 V	---	43	mA
Propagation delay time from any input except RBI to any output	t_{PLH}	C_L = 50 pF minimum R_L = 280 Ω ±5% (Figure 5)	15	250	ns
Propagation delay time from RBI to any output	t_{PLH}		15	250	ns
Propagation delay time from any input except RBI to any output	t_{PHL}		15	250	ns
Propagation delay time from RBI to any output	t_{PHL}		15	250	ns

1/ All unspecified inputs at 5.5 volts.
2/ All unspecified inputs grounded.
3/ Device type 04 maximum V_{OH} = 30 V.
Device type 05 maximum V_{OH} = 15 V.
4/ Outputs a through g only.
5/ BI/RBO mode only.
6/ Any input except BI/RBO mode.

TABLE I. Electrical performance characteristics, device type 06.

Test	Symbol	Conditions	Limits		Units
			Min	Max	
High-level output voltage	V_{OH}	V_{CC} = 4.5 V, I_{OH} = -0.2 mA V_{IN} = 2.0 V	2.4	---	Volts
Low-level output voltage	V_{OL}	V_{CC} = 4.5 V, I_{OL} = 2 mA V_{IN} = 0.7 V and 2.0 V	---	0.3	Volts
Low-level input current	I_{IL}	V_{CC} = 5.0 V, V_{IN} = 0.3 V 1/	-60	-180	µA
High-level input current	I_{IH1}	V_{CC} = 5.0 V, V_{IN} = 2.4 V 2/	---	10	µA
High-level input current	I_{IH2}	V_{CC} = 5.0 V, V_{IN} = 5.5 V 2/	---	100	µA
Short-circuit output current	I_{OS}	V_{CC} = 5.0 V 3/	-3	-15	mA
Supply current	I_{CC}	V_{CC} = 5.0 V, V_{IN} = 0 V	---	5.3	mA
Propagation delay time through two logic levels	t_{PHL}	C_L = 50 pF minimum R_L = 3.9 kΩ ±5% (Figure 5)	30	160	ns
Propagation delay time through two logic levels	t_{PLH}		10	90	ns
Propagation delay time through three logic levels	t_{PHL}		30	160	ns
Propagation delay time through three logic levels	t_{PLH}		10	90	ns

1/ All unspecified inputs at 5.5 volts.

2/ All unspecified inputs grounded.

3/ Not more than one output should be shorted at one time.

TABLE I. Electrical performance characteristics, device type 07.

Test	Symbol	Conditions	Limits		Units
			Min	Max	
High-level output voltage	V_{OH}	V_{CC} = 4.5 V, I_{OH} = -0.4 mA V_{IN} = 0.7 V and 2.0 V	2.4	---	Volts
Low-level output voltage	V_{OL}	V_{CC} = 4.5 V, I_{OL} = 4.8 mA V_{IN} = 0.7 V and 2.0 V	---	0.3	Volts
Input clamp voltage	V_{IC}	V_{CC} = 4.5 V, I_{IN} = -10 mA	---	-1.5	Volts
Low-level input current	I_{IL}	V_{CC} = 5.5 V, V_{IN} = 0.3 V	-176	-400	μA
High-level input current	I_{IH1}	V_{CC} = 5.5 V, V_{IN} = 2.4 V	---	20	μA
High-level input current	I_{IH2}	V_{CC} = 5.5 V, V_{IN} = 5.5 V	---	100	μA
Short-circuit output current	I_{OS}	V_{CC} = 5.5 V 1/	-2.5	-25	mA
Supply current	I_{CC}	V_{CC} = 5.5 V	---	13	mA
Propagation delay time, high-to-low level	t_{PHL}	C_L = 50 pF minimum R_L = 1.7 kΩ ±5% (Figure 5)	10	50	ns
Propagation delay time, low-to-high level	t_{PLH}		10	50	ns

1/ Not more than one output should be shorted at one time.

3.2.1 Logic diagrams. The logic diagrams shall be as specified on figure 1.

3.2.2 Terminal connections. The terminal connections shall be as specified on figure 2.

3.2.3 Truth tables. The truth tables shall be as specified on figure 3.

3.2.4 Case outlines. Case outlines shall be as specified in MIL-M-38510 and in 1.2.3 herein.

3.3 Lead material and finish. The lead material and finish shall be in accordance with MIL-M-38510 (see 6.5).

3.4 Electrical performance characteristics. The electrical performance characteristics are as specified in table I, and apply over the full recommended case operating temperature range, unless otherwise specified.

TABLE II. Electrical test requirements.

MIL-STD-883 test requirements	Subgroups (see table III) Class B devices
Interim electrical parameters (pre burn-in) (method 5004)	1
Final electrical test parameters (method 5004)	1*, 2, 3, 9
Group A test requirements (method 5005)	1*, 2, 3, 9 10, 11
Groups C and D end-point electrical electrical parameters (method 5005)	1, 2, 3
Additional electrical subgroups for group C periodic inspections	None

PDA applies to subgroup 1 (see 4.2c).

3.5 Electrical test requirements. Electrical test requirements shall be the subgroups specified in table II. The electrical tests for each subgroup are described in table III.

3.6 Marking. Marking shall be in accordance with MIL-M-38510. At the option of the manufacturer, the country of origin may be omitted from the body of the microcircuit, but shall be retained on the initial container. The "JAN" or "J" certification mark shall not be used.

3.7 Manufacturer eligibility. To be eligible to supply microcircuits to this specification, a manufacturer shall have a manufacturer certification in accordance with MIL-M-38510 for at least one line. Not necessarily the line producing the device type described herein.

3.8 Certification. Certification in accordance with MIL-M-38510 is not required for this device.

4. QUALITY ASSURANCE PROVISIONS

4.1 Sampling and inspection. Sampling and inspection procedures shall be in accordance with MIL-M-38510 and methods 5005 and 5007, as applicable, of MIL-STD-883, except as modified herein.

4.2 Screening. Screening shall be in accordance with method 5004 of MIL-STD-883, and shall be conducted on all devices prior to quality conformance inspection. The following additional criteria shall apply:

a. Burn-in test (method 1015 of MIL-STD-883).

(1) Test condition D or E, using the circuit shown on figure 4, or equivalent.

(2) T_A = +125°C minimum.

b. Interim and final electrical test parameters shall be as specified in table II, except interim electrical parameters test prior to burn-in is optional at the discretion of the manufacturer.

c. The percent defective allowable (PDA) for class B devices shall be 10 percent based on failures from group A, subgroup 1 test after cooldown as final electrical test in accordance with method 5004 of MIL-STD-883, and with no intervening electrical measurements. If interim electrical parameter tests are performed prior to burn-in, failures resulting from pre burn-in screening may be excluded from the PDA. If interim electrical parameter tests prior to burn-in are omitted, then all screening failures shall be included in the PDA. The verified failures of group A, subgroup 1, after burn-in divided by the total number of devices submitted for burn-in in that lot shall be used to determine the percent defective for that lot, and the lot shall be accepted or rejected based on the PDA for the applicable device class.

4.3 Qualification inspection. Qualification inspection is not required.

4.4 Quality conformance inspection. Quality conformance inspection shall be in accordance with MIL-M-38510, and as specified herein. Inspections to be performed shall be those specified in method 5005 of MIL-STD-883 and herein for groups A, B, C, and D inspections (see 4.4.1 through 4.4.4). Generic test data (see 6.6) may be used to satisfy the requirements for groups C and D inspections. Quality conformance inspection shall be completed on the specific devices covered by this specification before they are shipped.

4.4.1 Group A inspection. Group A inspection shall be in accordance with table I of method 5005 of MIL-STD-883 and as follows:

a. Tests shall be as specified in table II herein.

b. Subgroups 4, 5, 6, 7, and 8 of table I of method 5005 of MIL-STD-883 shall be omitted.

4.4.2 Group B inspection. Group B inspection shall be in accordance with table II of method 5005 of MIL-STD-883.

4.4.3 Group C inspection. Group C inspection shall be in accordance with table III of method 5005 of MIL-STD-883 and as follows:

a. End-point electrical parameters shall be as specified in table II herein.

b. Subgroups 3 and 4 shall be added to the group C inspection requirements for class B devices and shall consist of the tests, conditions, and limits specified for subgroups 10 and 11 of group A.

c. Steady-state life test (method 1005 of MIL-STD-883) conditions:

(1) Test condition D or E, using the circuit shown on figure 4, or equivalent.

(2) T_A = +125°C minimum.

(3) Test duration: 1,000 hours, except as permitted by appendix B of MIL-M-38510.

Device types 01 and 06

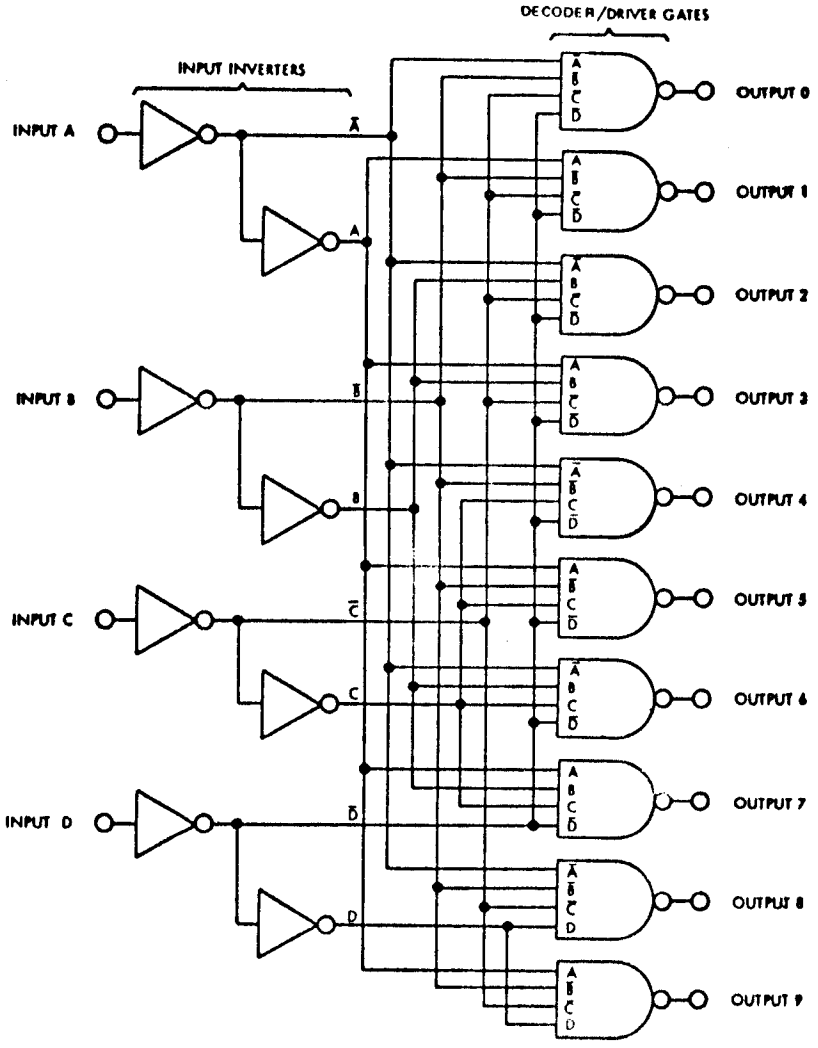

FIGURE 1. Logic diagrams.

Device type 02

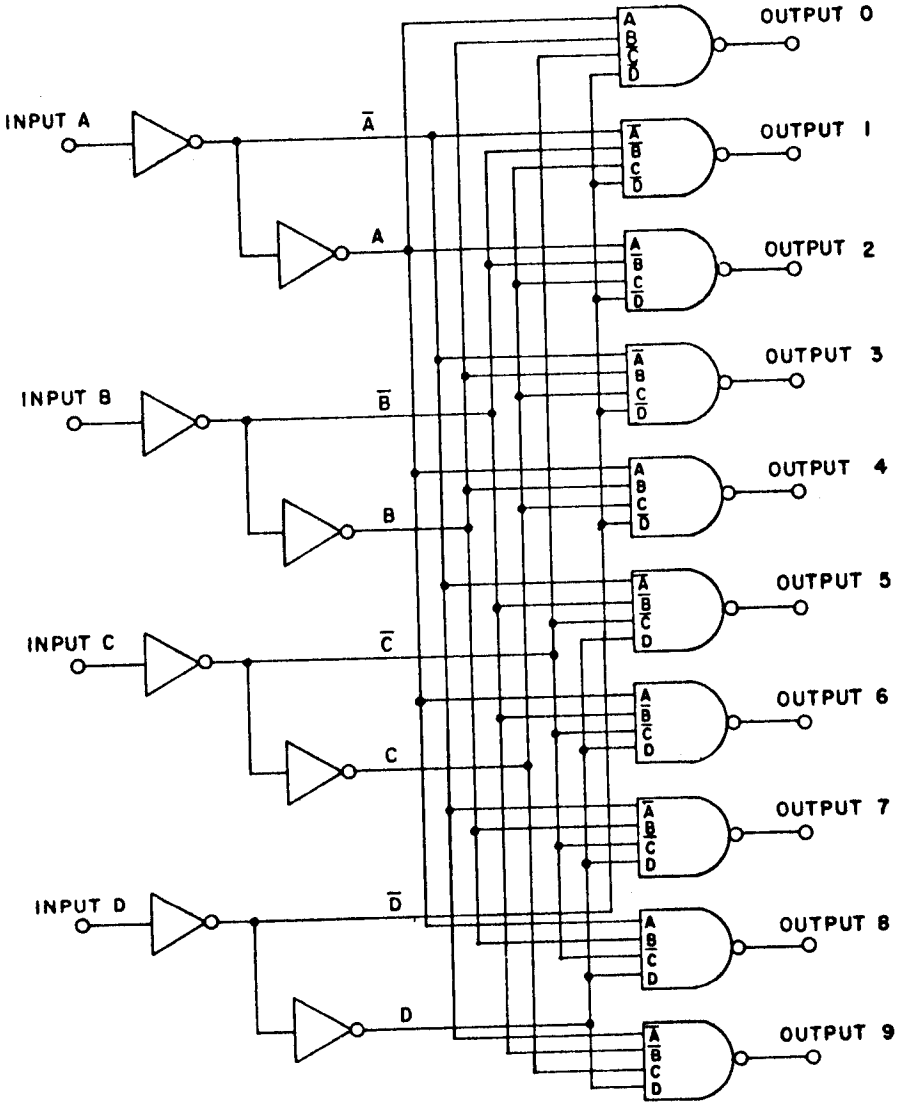

FIGURE 1. Logic diagrams - Continued.

Device type 03

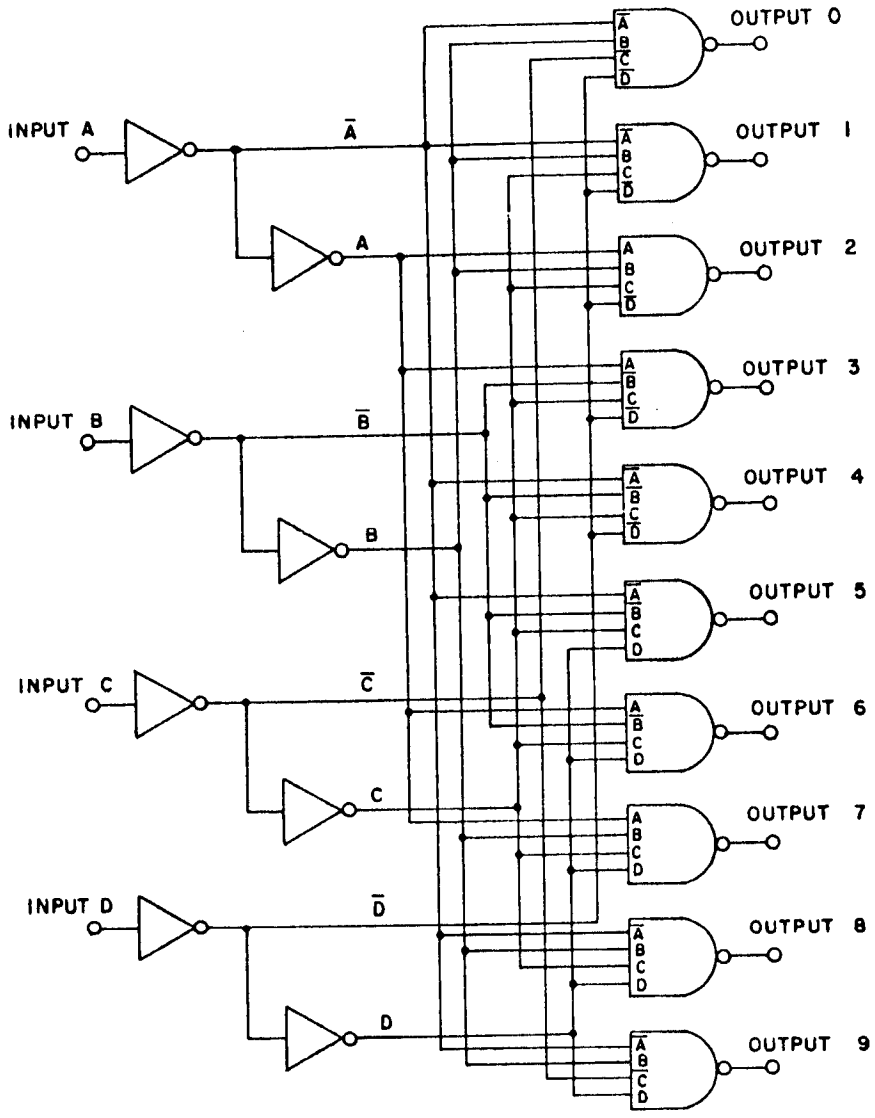

FIGURE 1. Logic diagrams - Continued.

Device types 04 and 05

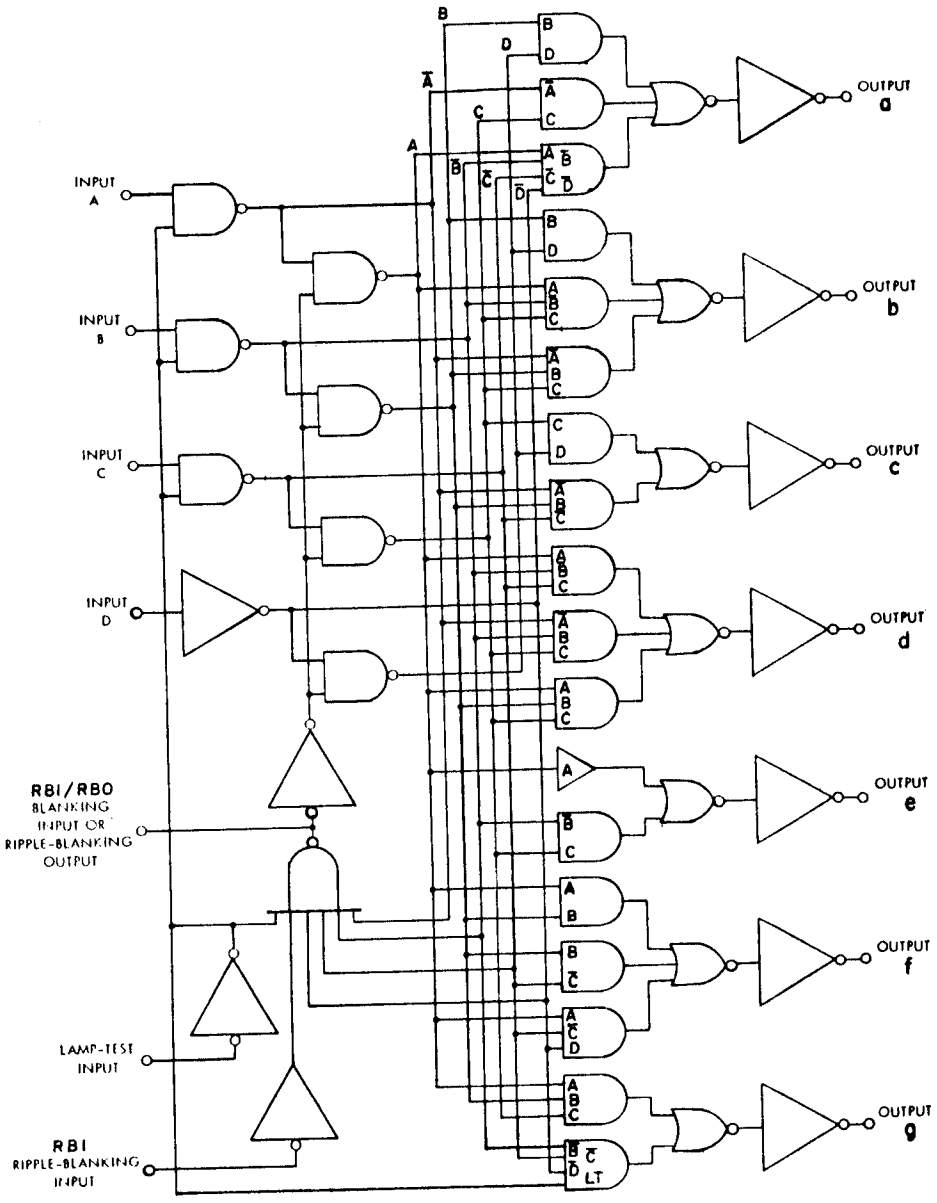

FIGURE 1. Logic diagrams - Continued.

Device type 07

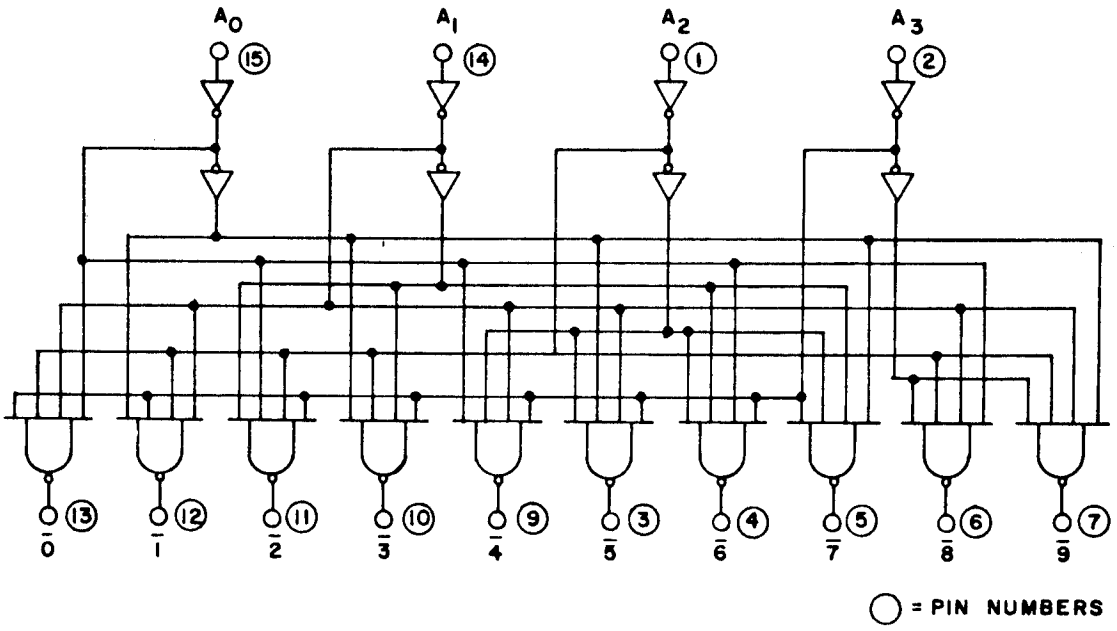

FIGURE 1. Logic diagrams - Continued.

Device types 01, 02, 03, and 06

Case E

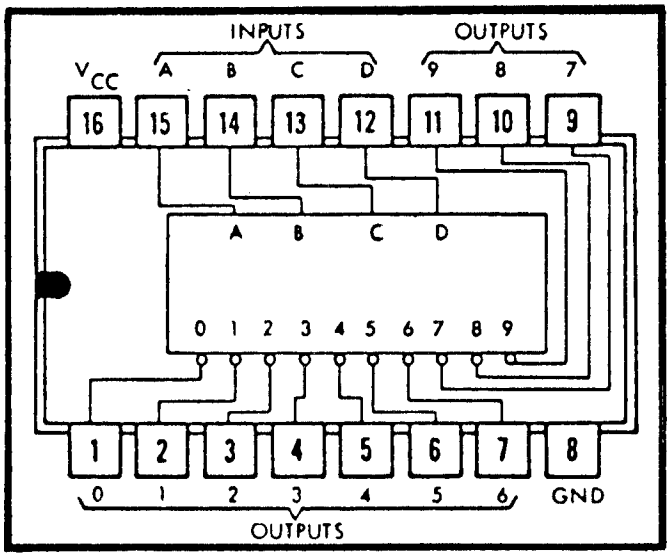

Device types 04 and 05

Case E

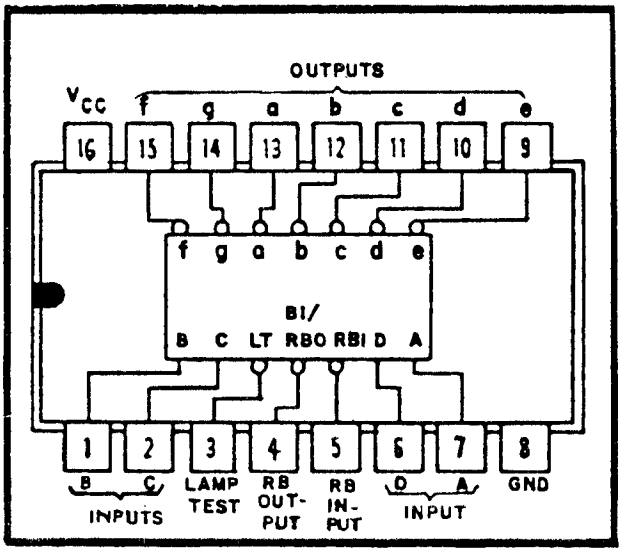

FIGURE 2. Terminal connections.

Device type 07

Cases E and F

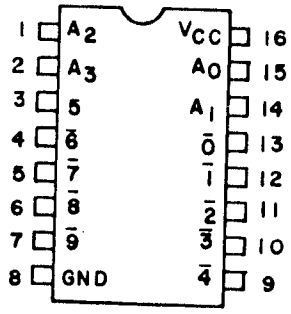

FIGURE 2. Terminal connections - Continued.

Device types 01 and 06

INPUTS				OUTPUTS									
D	C	B	A	0	1	2	3	4	5	6	7	8	9
L	L	L	L	L	H	H	H	H	H	H	H	H	H
L	L	L	H	H	L	H	H	H	H	H	H	H	H
L	L	H	L	H	H	L	H	H	H	H	H	H	H
L	L	H	H	H	H	H	L	H	H	H	H	H	H
L	H	L	L	H	H	H	H	L	H	H	H	H	H
L	H	L	H	H	H	H	H	H	L	H	H	H	H
L	H	H	L	H	H	H	H	H	H	L	H	H	H
L	H	H	H	H	H	H	H	H	H	H	L	H	H
H	L	L	L	H	H	H	H	H	H	H	H	L	H
H	L	L	H	H	H	H	H	H	H	H	H	H	L
H	L	H	L	H	H	H	H	H	H	H	H	H	H
H	L	H	H	H	H	H	H	H	H	H	H	H	H
H	H	L	L	H	H	H	H	H	H	H	H	H	H
H	H	L	H	H	H	H	H	H	H	H	H	H	H
H	H	H	L	H	H	H	H	H	H	H	H	H	H
H	H	H	H	H	H	H	H	H	H	H	H	H	H

FIGURE 3. Truth tables.

Device type 02

INPUTS				OUTPUTS									
D	C	B	A	0	1	2	3	4	5	6	7	8	9
L	L	H	H	L	H	H	H	H	H	H	H	H	H
L	H	L	L	H	L	H	H	H	H	H	H	H	H
L	H	L	H	H	H	L	H	H	H	H	H	H	H
L	H	H	L	H	H	H	L	H	H	H	H	H	H
L	H	H	H	H	H	H	H	L	H	H	H	H	H
H	L	L	L	H	H	H	H	H	L	H	H	H	H
H	L	L	H	H	H	H	H	H	H	L	H	H	H
H	L	H	L	H	H	H	H	H	H	H	L	H	H
H	L	H	H	H	H	H	H	H	H	H	H	L	H
H	H	L	L	H	H	H	H	H	H	H	H	H	L
H	H	L	H	H	H	H	H	H	H	H	H	H	H
H	H	H	L	H	H	H	H	H	H	H	H	H	H
H	H	H	H	H	H	H	H	H	H	H	H	H	H
L	L	L	L	H	H	H	H	H	H	H	H	H	H
L	L	L	H	H	H	H	H	H	H	H	H	H	H
L	L	H	L	H	H	H	H	H	H	H	H	H	H

Device type 03

INPUTS				OUTPUTS									
D	C	B	A	0	1	2	3	4	5	6	7	8	9
L	L	H	L	L	H	H	H	H	H	H	H	H	H
L	H	H	L	H	L	H	H	H	H	H	H	H	H
L	H	H	H	H	H	L	H	H	H	H	H	H	H
L	H	L	H	H	H	H	L	H	H	H	H	H	H
L	H	L	L	H	H	H	H	L	H	H	H	H	H
H	H	L	L	H	H	H	H	H	L	H	H	H	H
H	H	L	H	H	H	H	H	H	H	L	H	H	H
H	H	H	H	H	H	H	H	H	H	H	L	H	H
H	H	H	L	H	H	H	H	H	H	H	H	L	H
H	L	H	L	H	H	H	H	H	H	H	H	H	L
H	L	H	H	H	H	H	H	H	H	H	H	H	H
H	L	L	H	H	H	H	H	H	H	H	H	H	H
H	L	L	L	H	H	H	H	H	H	H	H	H	H
L	L	L	L	H	H	H	H	H	H	H	H	H	H
L	L	L	H	H	H	H	H	H	H	H	H	H	H
L	L	H	H	H	H	H	H	H	H	H	H	H	H

Device types 04 and 05

	INPUTS							OUTPUTS							
DECIMAL OR FUNCTION	LT	RBI	D	C	B	A	BI/RBO	a	b	c	d	e	f	g	NOTE
0	H	H	L	L	L	L	H	H	H	H	H	H	H	L	1
1	H	X	L	L	L	H	H	L	H	H	L	L	L	L	1
2	H	X	L	L	H	L	H	H	H	L	H	H	L	H	
3	H	X	L	L	H	H	H	H	H	H	H	L	L	H	
4	H	X	L	H	L	L	H	L	H	H	L	L	H	H	
5	H	X	L	H	L	H	H	H	L	H	H	L	H	H	
6	H	X	L	H	H	L	H	L	L	H	H	H	H	H	
7	H	X	L	H	H	H	H	H	H	H	L	L	L	L	
8	H	X	H	L	L	L	H	H	H	H	H	H	H	H	
9	H	X	H	L	L	H	H	H	H	H	L	L	H	H	
10	H	X	H	L	H	L	H	L	L	L	H	H	L	H	
11	H	X	H	L	H	H	H	L	L	H	H	L	L	H	
12	H	X	H	H	L	L	H	L	H	L	L	L	H	H	
13	H	X	H	H	L	H	H	H	L	L	H	L	H	H	
14	H	X	H	H	H	L	H	L	L	L	H	H	H	H	
15	H	X	H	H	H	H	H	L	L	L	L	L	L	L	
BI	X	X	X	X	X	X	L	L	L	L	L	L	L	L	2
RBI	H	L	L	L	L	L	L	L	L	L	L	L	L	L	3
LT	L	X	X	X	X	X	H	H	H	H	H	H	H	H	4

NOTES: 1. BI/RBO is wire-OR logic serving as blanking input (BI) and/or ripple-blanking output (RBO). The blanking input must be open or held at a high logic level when output functions 0 through 15 are desired, and ripple-blanking input (RBI) must be open or at a high logic level during the decimal 0 output. X = input may be high or low.

2. When a low logic level is applied to the blanking input (forced condition) all segment outputs go to a low logic level regardless of the state of any other input condition.

3. When ripple-blanking input (RBI) is at a low logic level, and A = B = C = D = low logic level, all segment outputs go to a low logic level and the ripple-blanking output goes to a low logic level (response condition).

4. When blanking input/ripple-blanking output is open or held at a high logic level, and a low logic level is applied to lamp-test input, all segment outputs go to a high logic level.

FIGURE 3. Truth tables - Continued.

Device type 07

Truth table

A_0	A_1	A_2	A_3	$\overline{0}$	$\overline{1}$	$\overline{2}$	$\overline{3}$	$\overline{4}$	$\overline{5}$	$\overline{6}$	$\overline{7}$	$\overline{8}$	$\overline{9}$
L	L	L	L	L	H	H	H	H	H	H	H	H	H
H	L	L	L	H	L	H	H	H	H	H	H	H	H
L	H	L	L	H	H	L	H	H	H	H	H	H	H
H	H	L	L	H	H	H	L	H	H	H	H	H	H
L	L	H	L	H	H	H	H	L	H	H	H	H	H
H	L	H	L	H	H	H	H	H	L	H	H	H	H
L	H	H	L	H	H	H	H	H	H	L	H	H	H
H	H	H	L	H	H	H	H	H	H	H	L	H	H
L	L	L	H	H	H	H	H	H	H	H	H	L	H
H	L	L	H	H	H	H	H	H	H	H	H	H	L
L	H	L	H	H	H	H	H	H	H	H	H	H	H
H	H	L	H	H	H	H	H	H	H	H	H	H	H
L	L	H	H	H	H	H	H	H	H	H	H	H	H
H	L	H	H	H	H	H	H	H	H	H	H	H	H
L	H	H	H	H	H	H	H	H	H	H	H	H	H
H	H	H	H	H	H	H	H	H	H	H	H	H	H

H = HIGH voltage level
L = LOW voltage level

FIGURE 3. Truth tables - Continued.

Device types 01, 02, 03, and 06

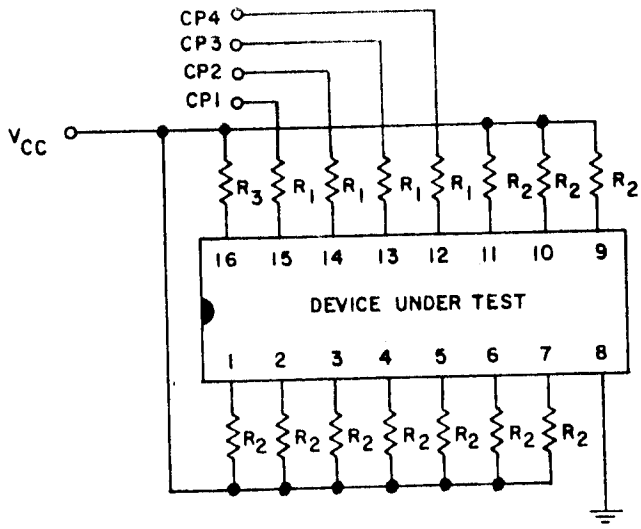

NOTES:

1. R_1 and R_3 are such that CP = 3 volts minimum and V_{CC} = 5 volts minimum at the device terminals.
2. R_2 = 2.43 kΩ ±5%.
3. CP1 = 100KHz, 50% duty cycle.
   CP2 = 50KHz, 50% duty cycle.
   CP3 = 25KHz, 50% duty cycle.
   CP4 = 12.5KHz, 50% duty cycle.

FIGURE 4. Burn-in and life test circuit.

Device types 04 and 05

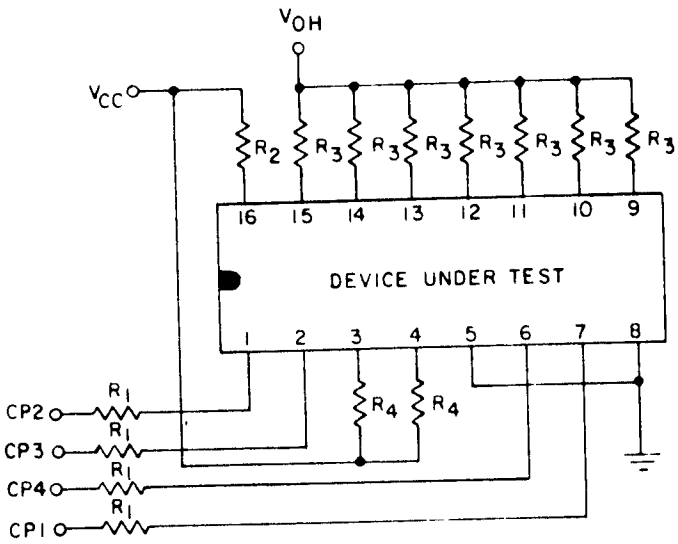

NOTES:

1. R_1 and R_2 are such that CP = 3 volts minimum and V_{CC} = 5 volts minimum at the device terminals.
2. R_3 = 240Ω ±5%.
   R_4 = 1 kΩ ±5%.
3. V_{OH} is such that the minimum voltage at the device terminals is 30 volts for device type 04 and 15 volts for device type 05.
4. CP1 = 100 kHz, 0-3 V, 50% duty cycle.
   CP2 = 50 kHz, 0-3 V, 50% duty cycle.
   CP3 = 25 kHz, 0-3 V, 50% duty cycle.
   CP4 = 12.5 kHz, 0-3 V, 50% duty cycle.

FIGURE 4. Burn-in and life test circuit - Continued.

Device type 07

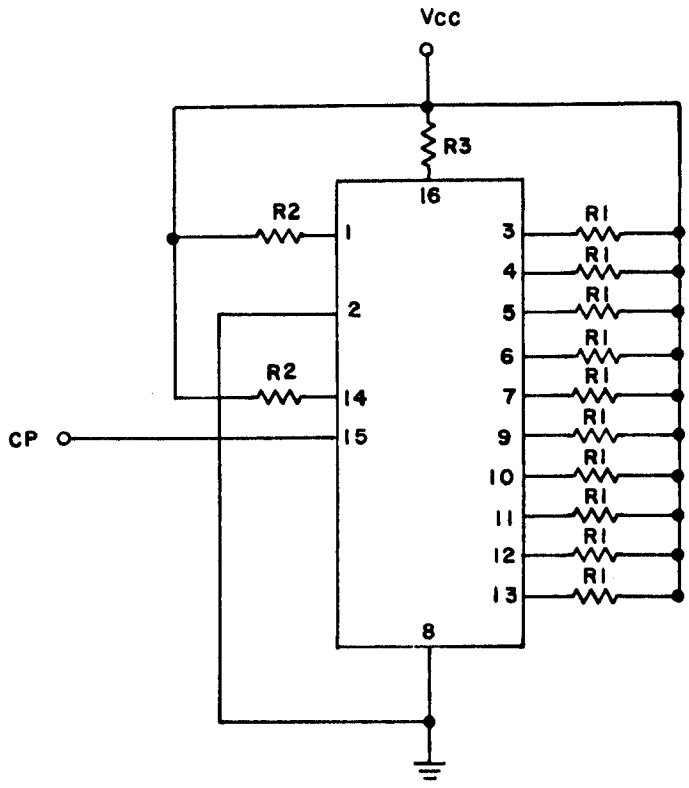

NOTES:
1. CP = 1 MHz, 0-3 V, 50% duty cycle.
2. R_1 = 325Ω ±5%.
3. R_2 = 16 kΩ ±5%.
4. R_3 shall be of such a value as to insure 5.0 volts at the device V_{CC} terminal.

FIGURE 4. Burn-in and life test circuit - Continued.

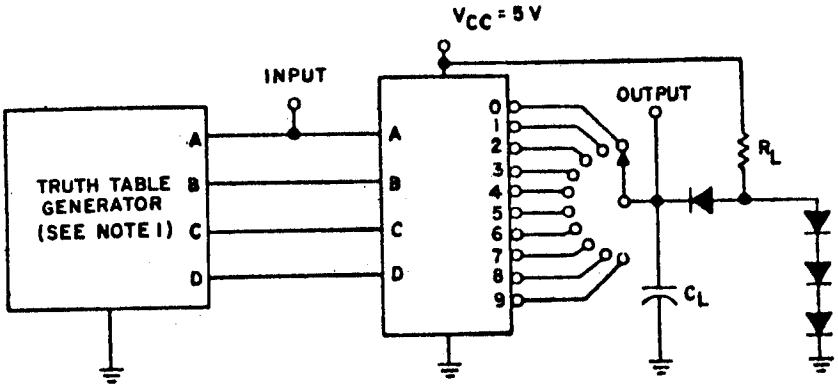

TEST CIRCUIT

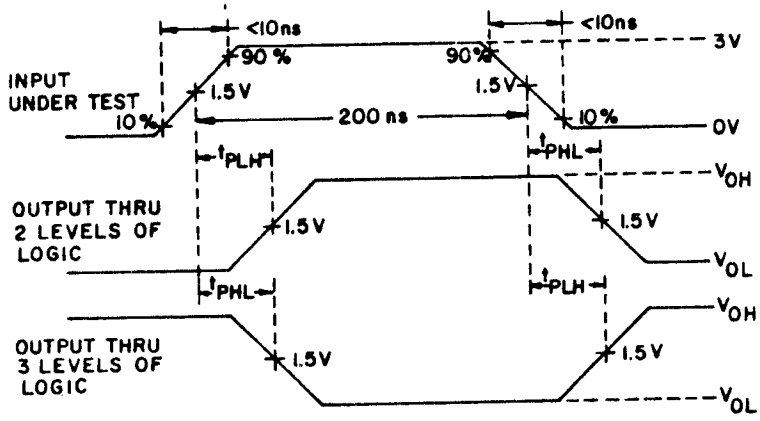

VOLTAGE WAVEFORMS

NOTES:

1. The truth table generator has the following characteristics: PRR < 1 MHz, $Z_{out} \approx 50\,\Omega$. Transition of the input under test shall occur simultaneously with or following the transition of the other inputs.
2. C_L includes probe and jig capacitance.
3. All diodes are 1N914 or equivalent.
4. C_L = 50 pF minimum and R_L = 800 Ω ±5% for device types 01, 02 and 03.
5. C_L = 50 pF minimum and R_L = 3.9 kΩ ±5% for device type 06.

FIGURE 5. Switching time for device types 01, 02, 03 and 06.

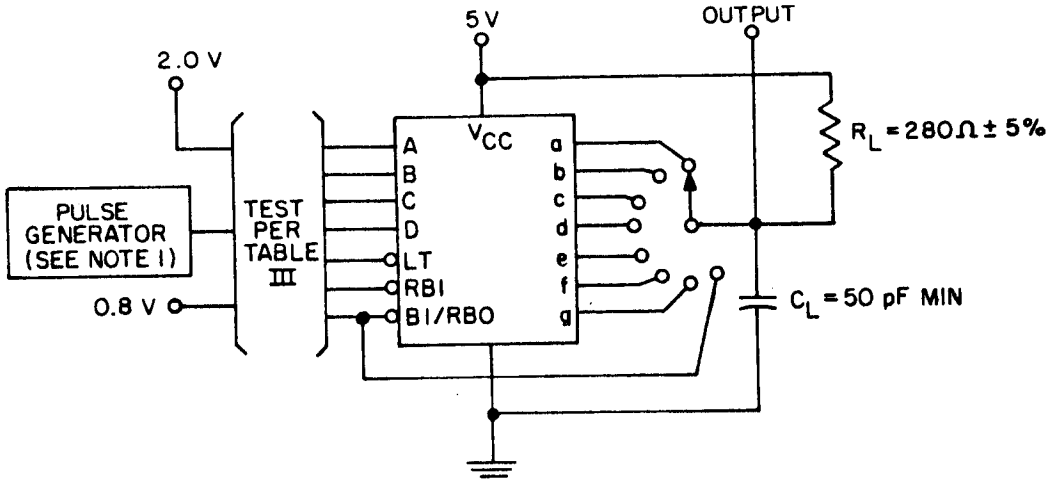

TEST CIRCUIT

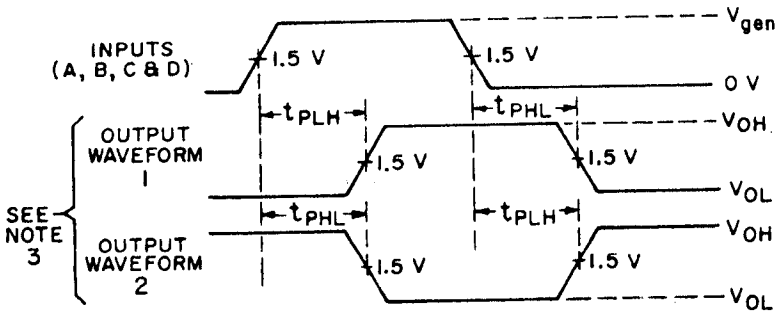

NOTES:

1. The pulse generator has the following characteristics: V_{gen} = 3 V minimum, $t_r = t_f \leq 10$ ns, PRR = 1 MHz, and minimum duty cycle = 50%.
2. C_L includes probe and jig capacitance.
3. Input - output waveform combination in accordance with the truth tables (see figure 3).

FIGURE 5. Switching time for device types 04 and 05.

Device type 07

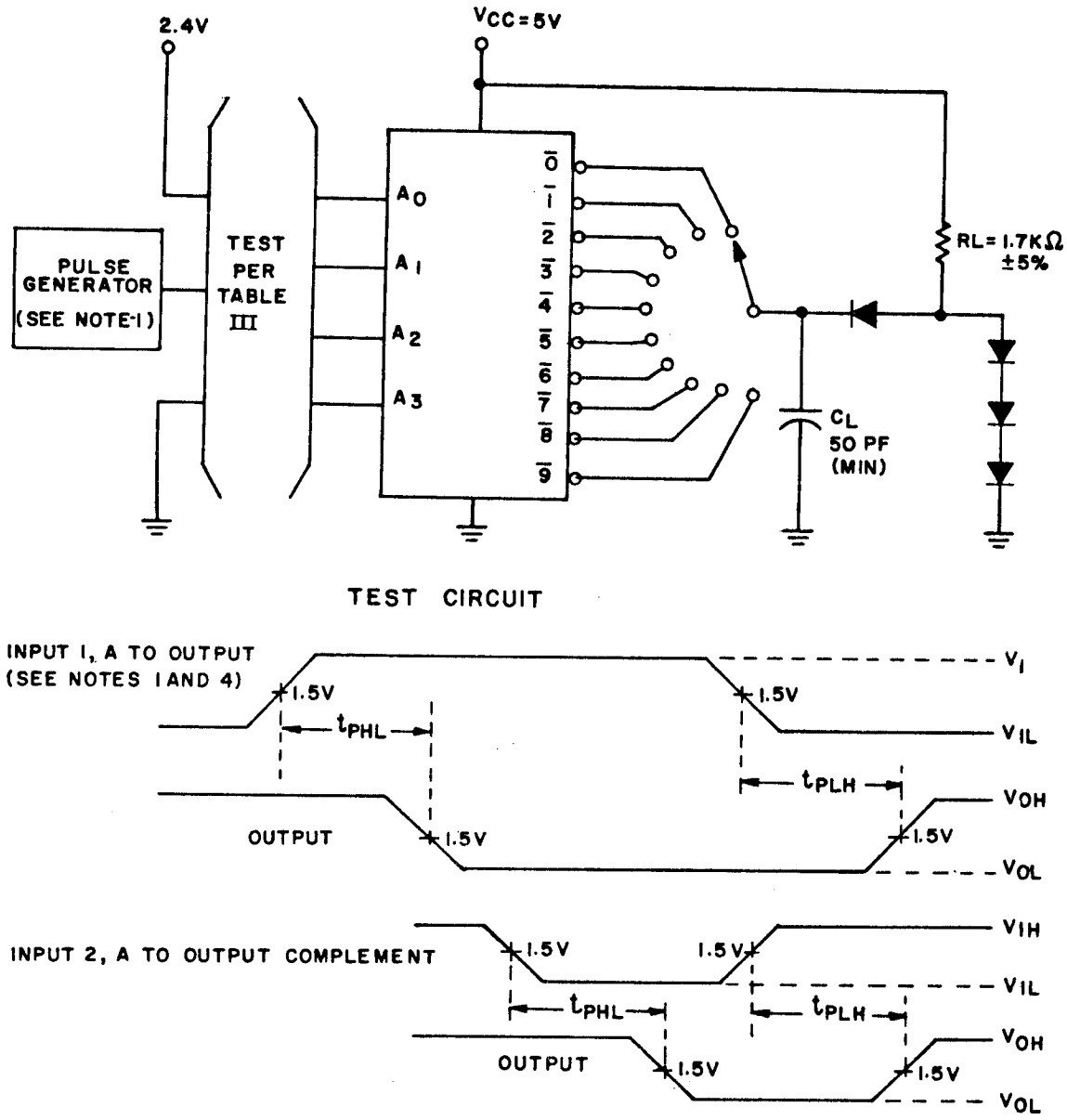

NOTES:

1. The pulse generator has the following characteristics: V_{gen} = 3.0 V min., $t_r = t_f \leq 10$ ns, PRR = 1 MHz, and min. duty cycle = 50%.
2. C_L includes probe and jig capacitance.
3. All diodes are 1N3064 or equivalent.
4. For each A input five outputs are tested using input 1, the remaining five are tested using input 2.

FIGURE 5. Switching time for device type 07.

TABLE III. Group A inspection for device type 01 1/.

Subgroup	Symbol	MIL-STD-883 method	Case E Test No.	1 0	2 1	3 2	4 3	5 4	6 5	7 6	8 GND	9 7	10 8	11 9	12 D	13 C	14 B	15 A	16 VCC	Meas. terminal	Test limits Min	Max	Unit
1 $T_C = 25°C$	V_{OH}	3006	1	-.4 mA							GND				2.0 V	2.0 V	2.0 V	2.0 V	4.5 V	0	2.4		V
			2		-.4 mA															1			
			3			-.4 mA														2			
			4				-.4 mA													3			
			5					-.4 mA												4			
			6						-.4 mA											5			
			7							-.4 mA										6			
			8									-.4 mA								7			
			9										-.4 mA							8			
			10											-.4 mA						9			
	V_{OL}	3007	11	8 mA											0.8 V	0.8 V	0.8 V	0.8 V		0		0.4	V
			12		8 mA												0.8 V	2.0 V		1			
			13			8 mA											2.0 V	0.8 V		2			
			14				8 mA										2.0 V	2.0 V		3			
			15					8 mA								2.0 V	0.8 V	0.8 V		4			
			16						8 mA								0.8 V	2.0 V		5			
			17							8 mA							2.0 V	0.8 V		6			
			18									8 mA					2.0 V	2.0 V		7			
			19										8 mA		2.0 V	0.8 V	0.8 V	0.8 V		8			
			20											8 mA	2.0 V	0.8 V	0.8 V	2.0 V		9			
	V_{IC}		21															-12 mA		A		-1.5	V
			22														-12 mA			B			
			23													-12 mA				C			
			24												-12 mA					D			
	I_{IH1}	3010	25												GND	GND	GND	2.4 V	5.0 V	A		20	μA
			26													GND	2.4 V	GND		B			
			27													2.4 V	GND			C			
			28												2.4 V	GND				D			
	I_{IH2}	3010	29												GND			5.5 V		A		100	μA
			30														5.5 V	GND		B			
			31													5.5 V	GND			C			
			32												5.5 V	GND	GND			D			
	I_{IL}	3009	33													5.5 V	5.5 V	0.4 V		A	-.4	-.8	mA
			34													5.5 V	0.4 V	5.5 V		B			
			35													0.4 V	5.5 V			C			
			36												0.4 V	5.5 V	5.5 V			D			
	I_{OS}	3011	37	GND											4.5 V	4.5 V	4.5 V	4.5 V	5.0 V	0	-9	-28	mA
			38		GND															1			
			39			GND														2			
			40				GND													3			
			41					GND												4			
			42						GND											5			
			43							GND										6			
			44									GND								7			
			45										GND							8			
			46											GND						9			
	I_{CC}	3005	47												GND	GND	GND	GND		V_{CC}		22	mA

See footnote at end of device type 01.

TABLE III. Group A inspection for device type 01 1/ - Continued.

Subgroup	Symbol	MIL-STD-883 method	Case E Test No.	1 0	2 1	3 2	4 3	5 4	6 5	7 6	8 GND	9 7	10 8	11 9	12 D	13 C	14 B	15 A	16 VCC	Meas. terminal	Test limits Min	Max	Unit
2	Same tests, terminal conditions and limits as for subgroup 1, except T_C = 125°C and V_{IC} tests are omitted.																						
3	Same tests, terminal conditions and limits as for subgroup 1, except T_C = -55°C and V_{IC} tests are omitted.																						
9	t_{PHL}	3003	48	OUT							GND				0.8 V	0.8 V	0.8 V	IN	5.0 V	A to 0	10	55	ns
T_C = 25°C	t_{PLH}	(Fig. 5)	49			OUT										0.8 V	2.0 V			A to 2			
			50					OUT								2.0 V	0.8 V			A to 4			
			51							OUT						2.0 V	2.0 V			A to 6			
			52										OUT		2.0 V	0.8 V	0.8 V			A to 8			
			53		OUT										0.8 V	0.8 V	0.8 V			A to 1	10	66	ns
			54				OUT									0.8 V	2.0 V			A to 3			
			55						OUT							2.0 V	0.8 V			A to 5			
			56									OUT				2.0 V	2.0 V			A to 7			
			57											OUT	2.0 V	0.8 V	0.8 V			A to 9			
	t_{PHL}	3003	58	OUT											0.8 V	0.8 V	IN	0.8 V		B to 0	10	55	ns
	t_{PLH}	(Fig. 5)	59		OUT											0.8 V		2.0 V		B to 1			
			60					OUT								2.0 V		0.8 V		B to 4			
			61						OUT							2.0 V		2.0 V		B to 5			
			62										OUT		2.0 V	0.8 V		0.8 V		B to 8			
			63											OUT	2.0 V	0.8 V		2.0 V		B to 9			
			64			OUT									0.8 V	0.8 V		0.8 V		B to 2	10	66	ns
			65				OUT									0.8 V		2.0 V		B to 3			
			66							OUT						2.0 V		0.8 V		B to 6			
			67									OUT				2.0 V		2.0 V		B to 7			
	t_{PHL}	3003	68	OUT											0.8 V	IN	0.8 V	0.8 V		C to 0	10	55	ns
	t_{PLH}	(Fig. 5)	69		OUT												0.8 V	2.0 V		C to 1			
			70			OUT											2.0 V	0.8 V		C to 2			
			71				OUT										2.0 V	2.0 V		C to 3			
			72										OUT		2.0 V		0.8 V	0.8 V		C to 8			
			73											OUT	2.0 V			2.0 V		C to 9			
			74					OUT							0.8 V			0.8 V		C to 4	10	66	ns
			75						OUT									2.0 V		C to 5			
			76							OUT							2.0 V	0.8 V		C to 6			
			77									OUT					2.0 V	2.0 V		C to 7			
	t_{PHL}	3003	78	OUT											IN	0.8 V	0.8 V	0.8 V		D to 0	10	55	ns
	t_{PLH}	(Fig. 5)	79		OUT												0.8 V	2.0 V		D to 1			
			80			OUT											2.0 V	0.8 V		D to 2			
			81				OUT										2.0 V	2.0 V		D to 3			
			82					OUT								2.0 V	0.8 V	0.8 V		D to 4			
			83						OUT								0.8 V	2.0 V		D to 5			
			84							OUT							2.0 V	0.8 V		D to 6			
			85									OUT					2.0 V	2.0 V		D to 7			
			86										OUT			0.8 V	0.8 V	0.8 V		D to 8	10	66	ns
			87											OUT		0.8 V	0.8 V	2.0 V		D to 9	10	66	ns

See footnote at end of device type 01.

TABLE III. Group A inspection for device type 01 1/ - Continued.

Subgroup	Symbol	MIL-STD-883 method	Case E Test No.	1 0	2 1	3 2	4 3	5 4	6 5	7 6	8 GND	9 7	10 8	11 9	12 D	13 C	14 B	15 A	16 V_{CC}	Meas. terminal	Test limits Min	Max	Unit
10 T_C=125°C	tPHL tPLH	3003 (Fig. 5)	88	OUT							GND				0.8 V	0.8 V	0.8 V	IN	5.0 V	A to 0	10	70	ns
			89			OUT										0.8 V	2.0 V			A to 2			
			90					OUT								2.0 V	0.8 V			A to 4			
			91							OUT						2.0 V	2.0 V			A to 6			
			92										OUT		2.0 V	0.8 V	0.8 V			A to 8			
			93		OUT										0.8 V	0.8 V	0.8 V			A to 1	10	85	ns
			94				OUT									0.8 V	2.0 V			A to 3			
			95						OUT							2.0 V	0.8 V			A to 5			
			96									OUT				2.0 V	2.0 V			A to 7			
			97											OUT	2.0 V	0.8 V	0.8 V			A to 9			
	tPHL tPLH	3003 (Fig. 5)	98	OUT											0.8 V	0.8 V	IN	0.8 V		B to 0	10	70	ns
			99		OUT											0.8 V		2.0 V		B to 1			
			100					OUT								2.0 V		0.8 V		B to 4			
			101						OUT							2.0 V		2.0 V		B to 5			
			102										OUT		2.0 V	0.8 V		0.8 V		B to 8			
			103											OUT	2.0 V	0.8 V		2.0 V		B to 9			
	tPHL tPLH	3003 (Fig. 5)	104			OUT									0.8 V	0.8 V		0.8 V		B to 2	10	85	ns
			105				OUT									0.8 V		2.0 V		B to 3			
			106							OUT						2.0 V		0.8 V		B to 6			
			107									OUT				2.0 V		2.0 V		B to 7			
	tPHL tPLH	3003 (Fig. 5)	108	OUT												IN	0.8 V	0.8 V		C to 0	10	70	ns
			109		OUT												0.8 V	2.0 V		C to 1			
			110			OUT											2.0 V	0.8 V		C to 2			
			111				OUT										2.0 V	2.0 V		C to 3			
			112										OUT		2.0 V		0.8 V	0.8 V		C to 8			
			113											OUT	2.0 V			2.0 V		C to 9			
			114					OUT							0.8 V			0.8 V		C to 4	10	85	ns
			115						OUT									2.0 V		C to 5			
			116							OUT							2.0 V	0.8 V		C to 6			
			117									OUT					2.0 V	2.0 V		C to 7			
	tPHL tPLH	3003 (Fig. 5)	118	OUT											IN	0.8 V	0.8 V	0.8 V		D to 0	10	70	ns
			119		OUT												0.8 V	2.0 V		D to 1			
			120			OUT											2.0 V	0.8 V		D to 2			
			121				OUT										2.0 V	2.0 V		D to 3			
			122					OUT								2.0 V	0.8 V	0.8 V		D to 4			
			123						OUT								0.8 V	2.0 V		D to 5			
			124							OUT							2.0 V	0.8 V		D to 6			
			125									OUT					2.0 V	2.0 V		D to 7			
	tPHL tPLH	3003 3003	126										OUT			0.8 V	0.8 V	0.8 V		D to 8	10	85	ns
			127											OUT		0.8 V	0.8 V	2.0 V		D to 9	10	85	ns
11	Same tests, terminal conditions and limits as for subgroup 10, except T_C = -55°C.																						

1/ Terminal conditions (pins not designated may be H $\geq$ 2.0V, or L $\leq$ 0.8V, or open).

TABLE III. Group A inspection for device type 02 [1/].

Subgroup	Symbol	MIL-STD-883 method	Case E / Test No.	1 / 0	2 / 1	3 / 2	4 / 3	5 / 4	6 / 5	7 / 6	8 / GND	9 / 7	10 / 8	11 / 9	12 / D	13 / C	14 / B	15 / A	16 / VCC	Meas. terminal	Test limits Min	Test limits Max	Test limits Unit
1 $T_C = 25°C$	V_{OH}	3006	1	-.4 mA							GND				2.0 V	2.0 V	2.0 V	2.0 V	4.5 V	0	2.4		V
			2		-.4 mA															1			
			3			-.4 mA														2			
			4				-.4 mA													3			
			5					-.4 mA												4			
			6						-.4 mA											5			
			7							-.4 mA										6			
			8									-.4 mA								7			
			9										-.4 mA							8			
			10											-.4 mA						9			
	V_{OL}	3007	11	8 mA											0.8 V	0.8 V	2.0 V	2.0 V		0		0.4	
			12		8 mA											2.0 V	0.8 V	0.8 V		1			
			13			8 mA											0.8 V	2.0 V		2			
			14				8 mA										2.0 V	0.8 V		3			
			15					8 mA									2.0 V	2.0 V		4			
			16						8 mA						2.0 V	0.8 V	0.8 V	0.8 V		5			
			17							8 mA							0.8 V	2.0 V		6			
			18									8 mA					2.0 V	0.8 V		7			
			19										8 mA				2.0 V	2.0 V		8			
			20											8 mA		2.0 V	0.8 V	0.8 V		9			
	V_{IC}		21															-12 mA		A		-1.5	
			22														-12 mA			B			
			23													-12 mA				C			
			24												-12 mA					D			
	I_{IH1}	3010	25												GND	GND	GND	2.4 V	5.0 V	A		20	μA
			26													GND	2.4 V	GND		B			
			27													2.4 V	GND			C			
			28												2.4 V	GND				D			
	I_{IH2}	3010	29												GND			5.5 V		A		100	μA
			30														5.5 V	GND		B			
			31													5.5 V	GND			C			
			32												5.5 V	GND	GND			D			
	I_{IL}	3009	33													5.5 V	5.5 V	0.4 V		A	-.4	-.8	mA
			34													5.5 V	0.4 V	5.5 V		B			
			35													0.4 V	5.5 V			C			
			36												0.4 V	5.5 V	5.5 V			D			
	I_{OS}	3011	37	GND											GND	GND	GND	GND		0	-9	-28	mA
			38		GND															1			
			39			GND														2			
			40				GND													3			
			41					GND												4			
			42						GND											5			
			43							GND										6			
			44									GND								7			
			45										GND							8			
			46											GND						9			
	I_{CC}	3005	47												GND	GND	GND	GND		VCC		22	mA

See footnote at end of device type 02.

TABLE III. Group A inspection for device type 02 1/ - Continued.

Subgroup	Symbol	MIL-STD-883 method	Case E	1	2	3	4	5	6	7	8	9	10	11	12	13	14	15	16	Meas. terminal	Test limits		
			Test No.	0	1	2	3	4	5	6	GND	7	8	9	D	C	B	A	V_{CC}		Min	Max	Unit
2	Same tests, terminal conditions and limits as for subgroup 1, except T_C = 125°C and V_{IC} tests are omitted.																						
3	Same tests, terminal conditions and limits as for subgroup 1, except T_C = -55°C and V_{IC} tests are omitted.																						
9	t_{PHL}	3003	48		OUT						GND				0.8 V	2.0 V	0.8 V	IN	5.0 V	A to 1	10	55	ns
T_C = 25°C	t_{PLH}	(Fig. 5)	49				OUT								0.8 V	2.0 V	2.0 V			A to 3			
			50						OUT						2.0 V	0.8 V	0.8 V			A to 5			
			51									OUT				0.8 V	2.0 V			A to 7			
			52											OUT		2.0 V	0.8 V			A to 9			
			53	OUT											0.8 V	0.8 V	2.0 V			A to 0	10	66	ns
			54			OUT										2.0 V	0.8 V			A to 2			
			55					OUT								2.0 V	2.0 V			A to 4			
			56							OUT					2.0 V	0.8 V	0.8 V			A to 6			
			57										OUT		2.0 V	0.8 V	2.0 V			A to 8			
	t_{PHL}	3003	58		OUT										0.8 V	2.0 V	IN	0.8 V		B to 1	10	55	ns
	t_{PLH}	(Fig. 5)	59			OUT									0.8 V	2.0 V		2.0 V		B to 2			
			60						OUT						2.0 V	0.8 V		0.8 V		B to 5			
			61							OUT						0.8 V		2.0 V		B to 6			
			62											OUT		2.0 V		0.8 V		B to 9			
			63	OUT											0.8 V	0.8 V		2.0 V		B to 0	10	66	ns
			64				OUT									2.0 V		0.8 V		B to 3			
			65					OUT								2.0 V		2.0 V		B to 4			
			66									OUT			2.0 V	0.8 V		0.8 V		B to 7			
			67										OUT		2.0 V	0.8 V		2.0 V		B to 8			
	t_{PHL}	3003	68	OUT											0.8 V	IN	2.0 V	2.0 V		C to 0	10	55	ns
	t_{PLH}	(Fig. 5)	69						OUT						2.0 V		0.8 V	0.8 V		C to 5			
			70							OUT							0.8 V	2.0 V		C to 6			
			71									OUT					2.0 V	0.8 V		C to 7			
			72										OUT				2.0 V	2.0 V		C to 8			
			73		OUT										0.8 V		0.8 V	0.8 V		C to 1	10	66	ns
			74			OUT											0.8 V	2.0 V		C to 2			
			75				OUT										2.0 V	0.8 V		C to 3			
			76					OUT									2.0 V	2.0 V		C to 4			
			77											OUT	2.0 V		0.8 V	0.8 V		C to 9			
	t_{PHL}	3003	78	OUT											IN	0.8 V	2.0 V	2.0 V		D to 0	10	55	ns
	t_{PLH}	(Fig. 5)	79		OUT											2.0 V	0.8 V	0.8 V		D to 1			
			80			OUT											0.8 V	2.0 V		D to 2			
			81				OUT										2.0 V	0.8 V		D to 3			
			82					OUT									2.0 V	2.0 V		D to 4			
			83						OUT							0.8 V	0.8 V	0.8 V		D to 5	10	66	ns
			84							OUT							0.8 V	2.0 V		D to 6			
			85									OUT					2.0 V	0.8 V		D to 7			
			86										OUT				2.0 V	2.0 V		D to 8			
			87											OUT		2.0 V	0.8 V	0.8 V		D to 9			

See footnote at end of device type 02.

TABLE III. Group A inspection for device type 02 1/ - Continued.

Subgroup	Symbol	MIL-STD-883 method	Case E Test No.	1 0	2 1	3 2	4 3	5 4	6 5	7 6	8 GND	9 7	10 8	11 9	12 D	13 C	14 B	15 A	16 V_{CC}	Meas. terminal	Test limits Min	Max	Unit
10 T_C = 125°C	tPHL tPLH	3003 (Fig. 5)	88		OUT						GND				0.8 V	2.0 V	0.8 V	IN	5.0 V	A to 1	10	70	ns
			89				OUT								0.8 V	2.0 V	2.0 V			A to 3			
			90						OUT						2.0 V	0.8 V	0.8 V			A to 5			
			91									OUT				0.8 V	2.0 V			A to 7			
			92											OUT		2.0 V	0.8 V			A to 9			
			93	OUT											0.8 V	0.8 V	2.0 V			A to 0	10	85	ns
			94			OUT										2.0 V	0.8 V			A to 2			
			95					OUT								2.0 V	2.0 V			A to 4			
			96							OUT					2.0 V	0.8 V	0.8 V			A to 6			
			97										OUT		2.0 V	0.8 V	2.0 V			A to 8			
	tPHL tPLH	3003 (Fig. 5)	98		OUT										0.8 V	2.0 V	IN	0.8 V		B to 1	10	70	ns
			99			OUT									0.8 V	2.0 V		2.0 V		B to 2			
			100						OUT						2.0 V	0.8 V		0.8 V		B to 5			
			101							OUT						0.8 V		2.0 V		B to 6			
			102											OUT		2.0 V		0.8 V		B to 9			
	tPHL tPLH	3003 (Fig. 5)	103	OUT											0.8 V	0.8 V		2.0 V		B to 0	10	85	ns
			104				OUT									2.0 V		0.8 V		B to 3			
			105					OUT								2.0 V		2.0 V		B to 4			
			106									OUT			2.0 V	0.8 V		0.8 V		B to 7			
			107										OUT		2.0 V	0.8 V		2.0 V		B to 8			
	tPHL tPLH	3003 (Fig. 5)	108	OUT											0.8 V	IN	2.0 V	2.0 V		C to 0	10	70	ns
			109						OUT						2.0 V		0.8 V	0.8 V		C to 5			
			110							OUT							0.8 V	2.0 V		C to 6			
			111									OUT					2.0 V	0.8 V		C to 7			
			112										OUT				2.0 V	2.0 V		C to 8			
			113		OUT										0.8 V		0.8 V	0.8 V		C to 1	10	85	ns
			114			OUT											0.8 V	2.0 V		C to 2			
			115				OUT										2.0 V	0.8 V		C to 3			
			116					OUT									2.0 V	2.0 V		C to 4			
			117											OUT	2.0 V		0.8 V	0.8 V		C to 9			
	tPHL tPLH	3003 (Fig. 5)	118	OUT											IN	0.8 V	2.0 V	2.0 V		D to 0	10	70	ns
			119		OUT											2.0 V	0.8 V	0.8 V		D to 1			
			120			OUT											0.8 V	2.0 V		D to 2			
			121				OUT										2.0 V	0.8 V		D to 3			
			122					OUT									2.0 V	2.0 V		D to 4			
			123						OUT							0.8 V	0.8 V	0.8 V		D to 5	10	85	ns
			124							OUT							0.8 V	2.0 V		D to 6			
			125									OUT					2.0 V	0.8 V		D to 7			
			126										OUT				2.0 V	2.0 V		D to 8			
			127											OUT		2.0 V	0.8 V	0.8 V		D to 9			

11 Same tests, terminal conditions and limits as for subgroup 10, except T_C = -55°C.

1/ Terminal conditions (pins not designated may be H $\geq$ 2.0V, or L $\leq$ 0.8V, or open).

TABLE III. Group A inspection for device type 03 1/.

Subgroup	Symbol	MIL-STD-883 method	Case E	1	2	3	4	5	6	7	8	9	10	11	12	13	14	15	16	Meas. terminal	Test limits		
			Test No.	0	1	2	3	4	5	6	GND	7	8	9	D	C	B	A	V_{CC}		Min	Max	Unit
1 $T_C = 25\,°C$	V_{OH}	3006	1	-.4mA							GND				0.8V	0.8V	0.8V	0.8V	4.5V	0	2.4		V
			2		-.4mA															1			
			3			-.4mA														2			
			4				-.4mA													3			
			5					-.4mA												4			
			6						-.4mA											5			
			7							-.4mA										6			
			8									-.4mA								7			
			9										-.4mA							8			
			10											-.4mA						9			
	V_{OL}	3007	11	8 mA											0.8V	0.8V	2.0V	0.8V		0		0.4	V
			12		8 mA											2.0V		0.8V		1			
			13			8 mA												2.0V		2			
			14				8 mA										0.8V	2.0V		3			
			15					8 mA										0.8V		4			
			16						8 mA						2.0V			0.8V		5			
			17							8 mA								2.0V		6			
			18									8 mA					2.0V	2.0V		7			
			19										8 mA					0.8V		8			
			20											8 mA		0.8V		0.8V		9			
	V_{IC}		21															-12mA		A		-1.5	V
			22														-12mA			B			
			23													-12mA				C			
			24												-12mA					D			
	I_{IH1}	3010	25												GND	GND	GND	2.4V	5.0V	A		20	μA
			26													GND	2.4V	GND		B			
			27													2.4V	GND			C			
			28												2.4V	GND				D			
	I_{IH2}	3010	29												GND			5.5V		A		100	μA
			30														5.5V	GND		B			
			31													5.5V	GND			C			
			32												5.5V	GND	GND			D			
	I_{IL}	3009	33													5.5V	5.5V	0.4V		A	-.4	-.8	mA
			34													5.5V	0.4V	5.5V		B			
			35													0.4V	5.5V			C			
			36												0.4V	5.5V	5.5V			D			
	I_{OS}	3011	37	GND											GND	GND	GND	GND		0	-9	-28	mA
			38		GND															1			
			39			GND														2			
			40				GND													3			
			41					GND												4			
			42						GND											5			
			43							GND										6			
			44									GND								7			
			45										GND							8			
			46											GND						9			
	I_{CC}	3005	47												GND	GND	GND	GND		V_{CC}		22	mA

2	Same tests, terminal conditions and limits as for subgroup 1, except T_C = 125° C and V_{IC} tests are omitted.
3	Same tests, terminal conditions and limits as for subgroup 1, except T_C = -55° C and V_{IC} tests are omitted.

See footnote at end of device type 03.

TABLE III. Group A inspection for device type 03 1/ - Continued.

Subgroup	Symbol	MIL-STD-883 method	Case E	1	2	3	4	5	6	7	8	9	10	11	12	13	14	15	16	Meas. terminal	Test limits		
			Test No.	0	1	2	3	4	5	6	GND	7	8	9	D	C	B	A	V_{CC}		Min	Max	Unit
9	t_{PLH}	3003	48	OUT							GND				0.8V	0.8V	2.0V	IN	5.0V	A to 0	10	55	ns
$T_C = 25°C$	t_{PHL}	(Fig. 5)	49		OUT											2.0V	2.0V			A to 1			
			50					OUT									0.8V			A to 4			
			51						OUT						2.0V		0.8V			A to 5			
			52										OUT				2.0V			A to 8			
			53											OUT		0.8V				A to 9			
			54			OUT									0.8V	2.0V				A to 2	10	66	ns
			55				OUT								0.8V		0.8V			A to 3			
			56							OUT					2.0V		0.8V			A to 6			
			57									OUT			2.0V		2.0V			A to 7			
	t_{PLH}	3003	58				OUT								0.8V	2.0V	IN	2.0V		B to 3	10	55	ns
	t_{PHL}	(Fig. 5)	59					OUT							0.8V			0.8V		B to 4			
			60						OUT						2.0V			0.8V		B to 5			
			61							OUT					2.0V			2.0V		B to 6			
			62	OUT											0.8V	0.8V		0.8V		B to 0	10	66	ns
			63		OUT											2.0V		0.8V		B to 1			
			64			OUT												2.0V		B to 2			
			65									OUT			2.0V			2.0V		B to 7			
			66										OUT					0.8V		B to 8			
			67											OUT		0.8V		0.8V		B to 9			
	t_{PLH}	3003	68	OUT											0.8V	IN	2.0V	0.8V		C to 0	10	55	ns
	t_{PHL}	(Fig. 5)	69											OUT	2.0V					C to 9	10	55	ns
			70		OUT										0.8V					C to 1	10	66	ns
			71			OUT												2.0V		C to 2			
			72				OUT										0.8V	2.0V		C to 3			
			73					OUT										0.8V		C to 4			
			74						OUT						2.0V			0.8V		C to 5			
			75							OUT								2.0V		C to 6			
			76									OUT					2.0V	2.0V		C to 7			
			77										OUT				2.0V	0.8V		C to 8			
	t_{PLH}	3003	78	OUT											IN	0.8V	2.0V	0.8V		D to 0	10	55	ns
	t_{PHL}	(Fig. 5)	79		OUT											2.0V		0.8V		D to 1			
			80			OUT												2.0V		D to 2			
			81				OUT										0.8V	2.0V		D to 3			
			82					OUT										0.8V		D to 4			
			83						OUT									0.8V		D to 5	10	66	ns
			84							OUT								2.0V		D to 6			
			85									OUT					2.0V	2.0V		D to 7			
			86										OUT					0.8V		D to 8			
			87											OUT		0.8V		0.8V		D to 9			
10	t_{PLH}	3003	88	OUT											0.8V	0.8V	2.0V	IN		A to 0	10	70	ns
$T_C = 125°C$	t_{PHL}	(Fig. 5)	89		OUT											2.0V	2.0V			A to 1			
			90					OUT									0.8V			A to 4			
			91						OUT						2.0V		0.8V			A to 5			
			92										OUT				2.0V			A to 8			
			93											OUT		0.8V	2.0V			A to 9			

See footnote at end of device type 03.

TABLE III. Group A inspection for device type 03 [1/] - Continued.

Subgroup	Symbol	MIL-STD-883 method	Case E	1	2	3	4	5	6	7	8	9	10	11	12	13	14	15	16	Meas. terminal	Test limits Min	Max	Unit
			Test No.	0	1	2	3	4	5	6	GND	7	8	9	D	C	B	A	V_{CC}				
10 T_C = 125°C	t_{PLH} t_{PHL}	3003 (Fig. 5)	94			OUT									0.8V	2.0V	2.0V	IN	5.0V	A to 2	10	85	ns
			95				OUT								0.8V		0.8V			A to 3			
			96							OUT					2.0V		0.8V			A to 6			
			97									OUT			2.0V		2.0V			A to 7			
	t_{PLH} t_{PHL}	3003 (Fig. 5)	98				OUT								0.8V	2.0V	IN	2.0V		B to 3	10	70	ns
			99					OUT							0.8V			0.8V		B to 4			
			100						OUT						2.0V			0.8V		B to 5			
			101							OUT					2.0V			2.0V		B to 6			
	t_{PLH} t_{PHL}	3003 (Fig. 5)	102	OUT											0.8V	0.8V	IN	0.8V		B to 0	10	85	ns
			103		OUT											2.0V		0.8V		B to 1			
			104			OUT												2.0V		B to 2			
			105									OUT			2.0V			2.0V		B to 7			
			106										OUT					0.8V		B to 8			
			107											OUT		0.8V		0.8V		B to 9			
	t_{PLH} t_{PHL}	3003 (Fig. 5)	108	OUT											0.8V	IN	2.0V	0.8V		C to 0	10	70	ns
			109											OUT	2.0V					C to 9	10	70	ns
			110		OUT										0.8V					C to 1	10	85	
			111			OUT												2.0V		C to 2			
			112				OUT										0.8V	2.0V		C to 3			
			113					OUT										0.8V		C to 4			
			114						OUT						2.0V			0.8V		C to 5			
			115							OUT								2.0V		C to 6			
			116									OUT					2.0V	2.0V		C to 7			
			117										OUT				2.0V	0.8V		C to 8			
	t_{PLH} t_{PHL}	3003 (Fig. 5)	118	OUT											IN	0.8V	2.0V	0.8V		D to 0	10	70	ns
			119		OUT											2.0V		0.8V		D to 1			
			120			OUT												2.0V		D to 2			
			121				OUT										0.8V	2.0V		D to 3			
			122					OUT										0.8V		D to 4			
			123						OUT									0.8V		D to 5	10	85	ns
			124							OUT								2.0V		D to 6			
			125									OUT					2.0V	2.0V		D to 7			
			126										OUT					0.8V		D to 8			
			127											OUT		0.8V		0.8V		D to 9			
11	Same tests, terminal conditions and limits as for subgroup 10, except T_C = -55°C																						

1/ Terminal conditions (pins not designated may be H ≥ 2.0V, or L ≤ 0.8V, or open).

TABLE III. Group A inspection for device types 04 and 05 1/.

Subgroup	Symbol	MIL-STD-883 method	Case E / Test No.	1 / B	2 / C	3 / LT	4 / RBO	5 / RBI	6 / D	7 / A	8 / GND	9 / e	10 / d	11 / c	12 / b	13 / a	14 / g	15 / f	16 / VCC	Meas. terminal	Test limits Min	Max	Unit
1 $T_C = 25°C$	V_{OL1}	3007	1	X	X	0.8 v	2.0 v	X	X	X	GND	20 mA							4.5 v	e		0.4	V
			2										20 mA							d			
			3											20 mA						c			
			4												20 mA					b			
			5													20 mA				a			
			6														20 mA			g			
			7															20 mA		f			
	V_{OL2}	3007	8	0.8 v	0.8 v	2.0 v	4 mA	0.8 v	0.8 v	0.8 v										RBO		0.4	V
	I_{CEX}		9									Y								e		250	μA
			10										Y							d			
			11											Y						c			
			12												Y					b			
			13													Y				a			
			14														Y			g			
			15															Y		f			
	V_{OH}	3006	16	0.8 v	0.8 v	2.0 v	-.1 mA	2.0 v	0.8 v	0.8 v										RBO	2.4		V
	V_{IC}		17	-12 mA																B		-1.5	V
			18		-12 mA															C			
			19			-12mA														LT			
			20					-12 mA												RBI			
			21						-12 mA											D			
			22							-12 mA										A			
	I_{IL1}	3009	23	0.4 v	5.5 v	5.5 v		5.5 v	5.5 v	5.5 v									5.0 v	B	-.4	-.8	mA
			24	5.5 v	0.4 v	5.5 v														C			
			25		5.5 v	0.4 v														LT			
			26			5.5 v		0.4 v												RBI			
			27					5.5 v	0.4 v											D			
			28						5.5 v	0.4 v										A			
	I_{IL2}	3009	29				0.4 v		5.5 v	5.5 v										RBO	-1.0	-2.1	mA
	I_{IH1}	3010	30	2.4 v	GND	GND		GND	GND	GND										B		20	μA
			31	GND	2.4 v	GND														C			
			32		GND	2.4 v														LT			
			33			GND		2.4 v												RBI			
			34					GND	2.4 v											D			
			35					GND	GND	2.4 v										A			
	I_{IH2}	3010	36	5.5 v	GND	GND		GND	GND	GND										B		100	μA
			37	GND	5.5 v	GND														C			
			38		GND	5.5 v														LT			
			39			GND		5.5 v												RBI			
			40					GND	5.5 v											D			
			41						GND	5.5 v										A			
	I_{OS}	3011	42				GND		GND	GND										RBO		-4	mA
	I_{CC}	3005	43	5.5 v	5.5 v	5.5 v	5.5 v	5.5 v	5.5 v	5.5 v										VCC		43	mA
2	Same tests, terminal conditions and limits as for subgroup 1, except $T_C = 125°C$ and V_{IC} tests are omitted.																						
3	Same tests, terminal conditions and limits as for subgroup 1, except $T_C = -55°C$ and V_{IC} tests are omitted.																						

See footnote at end of device types 04 and 05.

TABLE III. Group A inspection for device types 04 and 05 1/ - Continued.

Subgroup	Symbol	MIL-STD-883 method	Case E Test No.	1 B	2 C	3 LT	4 RBO	5 RBI	6 D	7 A	8 GND	9 e	10 d	11 c	12 b	13 a	14 g	15 f	16 VCC	Meas. terminal	Test limits Min	Max	Unit
9 T_C = 25° C	t_{PLH} t_{PHL}	3003 (Fig. 5)	44	0.8 v	0.8 v	2.0 v		2.0 v	0.8 v	IN	GND					OUT			5.0 v	A to a	15	200	ns
			45										OUT							A to d			
			46									OUT								A to e			
			47															OUT		A to f			
			48	2.0 v										OUT						A to c			
			49	0.8 v	2.0 v										OUT					A to b			
			50	2.0 v	2.0 v												OUT			A to g			
			51	0.8 v	0.8 v		OUT	0.8 v												A to RBO			
	t_{PLH} t_{PHL}	3003 (Fig. 5)	52	IN	0.8 v	2.0 v		2.0 v	0.8 v	0.8 v				OUT						B to c	15	200	ns
			53															OUT		B to f			
			54														OUT			B to g			
			55		2.0 v										OUT					B to b			
			56										OUT							B to d			
			57									OUT								B to e			
			58		0.8 v				2.0 v							OUT				B to a			
			59		0.8 v		OUT	0.8 v	0.8 v											B to RBO			
	t_{PLH} t_{PHL}	3003 (Fig. 5)	60	0.8 v	IN	2.0 v		2.0 v	0.8 v	0.8 v						OUT				C to a	15	200	ns
			61										OUT							C to d			
			62									OUT								C to e			
			63														OUT			C to g			
			64							2.0 v					OUT					C to b			
			65							2.0 v								OUT		C to f			
			66	2.0 v						0.8 v				OUT						C to c			
			67	0.8 v			OUT	0.8 v		0.8 v										C to RBO			
	t_{PLH} t_{PHL}	3003 (Fig. 5)	68	0.8 v	0.8 v	2.0 v		2.0 v	IN	2.0 v						OUT				D to a	15	200	ns
			69															OUT		D to f			
			70														OUT			D to g			
			71	2.0 v						0.8 v					OUT					D to b			
			72	0.8 v	2.0 v									OUT						D to c			
			73		0.8 v			0.8 v					OUT							D to d			
			74									OUT								D to e			
			75				OUT													D to RBO			
	t_{PLH} t_{PHL}	3003 (Fig. 5)	76	0.8 v	0.8 v	IN		0.8 v	0.8 v	0.8 v						OUT				LT to a	15	200	ns
			77												OUT					LT to b			
			78											OUT						LT to c			
			79										OUT							LT to d			
			80									OUT								LT to e			
			81															OUT		LT to f			
			82														OUT			LT to g			
			83				OUT													LT to RBO			
	t_{PLH} t_{PHL}	3003 (Fig. 5)	84	0.8 v	0.8 v	2.0 v	IN	2.0 v	0.8 v	0.8 v						OUT				RBO to a	15	200	ns
			85												OUT					RBO to b			
			86											OUT						RBO to c			
			87										OUT							RBO to d			
			88									OUT								RBO to e			
			89															OUT		RBO to f			
			90														OUT			RBO to g			

See footnote at end of device types 04 and 05.

TABLE III. Group A inspection for device types 04 and 05 1/. - Continued

Subgroup	Symbol	MIL-STD-883 method	Case E Test No.	1 B	2 C	3 LT	4 RBO	5 RBI	6 D	7 A	8 GND	9 e	10 d	11 c	12 b	13 a	14 g	15 f	16 V_{CC}	Meas. terminal	Test limits Min	Test limits Max	Test limits Unit
9 $T_C = 25°C$	t_{PLH} t_{PHL}	3003 (Fig. 5)	91	0.8 v	0.8 v	2.0 v		IN	0.8 v	0.8 v	GND					OUT			5.0 v	RBI to a	15	200	ns
			92												OUT					RBI to b			
			93											OUT						RBI to c			
			94										OUT							RBI to d			
			95									OUT								RBI to e			
			96															OUT		RBI to f			
			97				OUT													RBI to RBO			
10 $T_C = 125°C$	t_{PLH} t_{PHL}	3003 (Fig. 5)	98	0.8 v	0.8 v	2.0 v		2.0 v	0.8 v	IN						OUT				A to a	15	250	ns
			99										OUT							A to d			
			100									OUT								A to e			
			101															OUT		A to f			
			102	2.0 v										OUT						A to c			
			103	0.8 v	2.0 v										OUT					A to b			
			104	2.0 v	2.0 v												OUT			A to g			
			105	0.8 v	0.8 v		OUT	0.8 v												A to RBO			
	t_{PLH} t_{PHL}	3003 (Fig. 5)	106	IN	0.8 v	2.0 v		2.0 v	0.8 v	0.8 v				OUT						B to c	15	250	ns
			107															OUT		B to f			
			108														OUT			B to g			
			109		2.0 v										OUT					B to b			
			110										OUT							B to d			
			111									OUT								B to e			
			112		0.8 v				2.0 v							OUT				B to a			
			113		0.8 v		OUT	0.8 v	0.8 v											B to RBO			
	t_{PLH} t_{PHL}	3003 (Fig. 5)	114	0.8 v	IN	2.0 v		2.0 v	0.8 v	0.8 v						OUT				C to a	15	250	ns
			115										OUT							C to d			
			116									OUT								C to e			
			117														OUT			C to g			
			118							2.0 v					OUT					C to b			
			119							2.0 v								OUT		C to f			
			120	2.0 v						0.8 v				OUT						C to c			
			121	0.8 v			OUT	0.8 v		0.8 v										C to RBO			
	t_{PLH} t_{PHL}	3003 (Fig. 5)	122	0.8 v	0.8 v	2.0 v		2.0 v	IN	2.0 v						OUT				D to a	15	250	ns
			123															OUT		D to f			
			124														OUT			D to g			
			125	2.0 v						0.8 v					OUT					D to b			
			126	0.8 v	2.0 v									OUT						D to c			
			127		0.8 v			0.8 v					OUT							D to d			
			128									OUT								D to e			
			129				OUT													D to RBO			
	t_{PLH} t_{PHL}	3003 (Fig. 5)	130	0.8 v	0.8 v	IN		0.8 v	0.8 v	0.8 v						OUT				LT to a	15	250	ns
			131												OUT					LT to b			
			132											OUT						LT to c			
			133										OUT							LT to d			
			134									OUT								LT to e			
			135															OUT		LT to f			
			136														OUT			LT to g			
			137				OUT													LT to RBO			

See footnote at end of device types 04 and 05.

TABLE III. Group A inspection for device types 04 and 05 1/. - Continued

Subgroup	Symbol	MIL-STD-883 method	Case E Test No.	1 B	2 C	3 LT	4 RBO	5 RBI	6 D	7 A	8 GND	9 e	10 d	11 c	12 b	13 a	14 g	15 f	16 VCC	Meas. terminal	Test limits Min	Max	Unit
10 $T_C = 125°$ C	t_{PHL} t_{PLH}	3003 (Fig. 5)	138	0.8 v	0.8 v	2.0 v	IN	2.0 v	0.8 v	0.8 v	GND					OUT			5.0 v	RBO to a	15	250	ns
			139											OUT	OUT					RBO to b			
			140										OUT							RBO to c			
			141																	RBO to d			
			142									OUT								RBO to e			
			143															OUT		RBO to f			
			144														OUT			RBO to g			
	t_{PLH} t_{PHL}	3003 (Fig. 5)	145	0.8 v	0.8 v	2.0 v		IN	0.8 v	0.8 v						OUT				RBI to a			
			146											OUT	OUT					RBI to b			
			147										OUT							RBI to c			
			148																	RBI to d			
			149									OUT								RBI to e			
			150															OUT		RBI to f			
			151				OUT													RBI to RBO			
11	Same tests, terminal conditions and limits as for subgroup 10, except $T_C = -55°$ C.																						

NOTES:

x = Input may be high or low.
y = 30 volts for device type 04 and 15 volts for device type 05.

1/ Terminal conditions (pins not designated may be $H \geq 2.0$, or $L \leq 0.8V$, or open).

TABLE III. Group A inspection for device type 06 1/.

Subgroup	Symbol	MIL-STD-883 method	Case E	1	2	3	4	5	6	7	8	9	10	11	12	13	14	15	16	Meas. terminal	Test limits Min	Test limits Max	Test limits Unit
			Test No.	0	1	2	3	4	5	6	GND	7	8	9	D	C	B	A	V_{CC}				
1 $T_C = 25°C$	V_{OH}	3006	1	-.2mA							GND				2.0 v	2.0 v	2.0 v	2.0 v	4.5 v	0	2.4		V
			2		-.2mA															1			
			3			-.2mA														2			
			4				-.2mA													3			
			5					-.2mA												4			
			6						-.2 mA											5			
			7							-.2mA										6			
			8									-.2 mA								7			
			9										-.2mA							8			
			10											-.2 mA						9			
	V_{OL}	3007	11	2 mA											0.7 v	0.7 v	0.7 v	0.7 v		0		0.3	V
			12		2 mA												0.7 v	2.0 v		1			
			13			2 mA											2.0 v	0.7 v		2			
			14				2 mA										2.0 v	2.0 v		3			
			15					2 mA								2.0 v	0.7 v	0.7 v		4			
			16						2 mA								0.7 v	2.0 v		5			
			17							2 mA							2.0 v	0.7 v		6			
			18									2 mA					2.0 v	2.0 v		7			
			19										2 mA		2.0 v	0.7 v	0.7 v	0.7 v		8			
			20											2 mA	2.0 v	0.7 v	0.7 v	2.0 v		9			
	I_{IH1}	3010	21												GND	GND	GND	2.4 v	5.0 v	A		10	μA
			22													GND	2.4 v	GND		B			
			23													2.4 v	GND			C			
			24												2.4 v	GND	GND			D			
	I_{IH2}	3010	25												GND	GND	GND	5.5 v		A		100	μA
			26													GND	5.5 v	GND		B			
			27													5.5 v	GND			C			
			28												5.5 v	GND	GND			D			
	I_{IL}	3009	29												5.5 v	5.5 v	5.5 v	0.3 v		A	-60	-180	μA
			30													5.5 v	0.3 v	5.5 v		B			
			31													0.3 v	5.5 v			C			
			32												0.3 v	5.5 v	5.5 v			D			
	I_{OS}	3011	33	GND											4.5 v	4.5 v	4.5 v	4.5 v	5.0 v	0	-3	-15	mA
			34		GND															1			
			35			GND														2			
			36				GND													3			
			37					GND												4			
			38						GND											5			
			39							GND										6			
			40									GND								7			
			41										GND							8			
			42											GND						9			
	I_{CC}	3005	43								GND				GND	GND	GND	GND	5.0 v	V_{CC}		5.3	mA
2	Same tests, terminal conditions and limits as for subgroup 1, except $T_C = 125°C$.																						
3	Same tests, terminal conditions and limits as for subgroup 1, except $T_C = -55°C$.																						

See footnote at end of device type 06.

TABLE III. Group A inspection for device type 06 1/. - Continued

Subgroup	Symbol	MIL-STD-883 method	Case E / Test No.	1 / 0	2 / 1	3 / 2	4 / 3	5 / 4	6 / 5	7 / 6	8 / GND	9 / 7	10 / 8	11 / 9	12 / D	13 / C	14 / B	15 / A	16 / V_{CC}	Meas. terminal	Test limits Min	Max	Unit
9 T_C = 25°C	t_{PHL}	3003 (Fig. 5)	44	OUT							GND				0.8 v	0.8 v	0.8 v	IN	5.0 v	A to 0	35	140	ns
			45			OUT										0.8 v	2.0 v			A to 2			
			46					OUT								2.0 v	0.8 v			A to 4			
			47							OUT						2.0 v	2.0 v			A to 6			
			48										OUT		2.0 v	0.8 v	0.8 v			A to 8			
			49		OUT										0.8 v	0.8 v	0.8 v			A to 1			
			50				OUT									0.8 v	2.0 v			A to 3			
			51						OUT							2.0 v	0.8 v			A to 5			
			52									OUT				2.0 v	2.0 v			A to 7			
			53											OUT	2.0 v	0.8 v	0.8 v			A to 9			
	t_{PLH}		54	OUT											0.8 v	0.8 v	0.8 v	IN		A to 0	15	70	
			55			OUT										0.8 v	2.0 v			A to 2			
			56					OUT								2.0 v	0.8 v			A to 4			
			57							OUT						2.0 v	2.0 v			A to 6			
			58										OUT		2.0 v	0.8 v	0.8 v			A to 8			
			59		OUT										0.8 v	0.8 v	0.8 v			A to 1			
			60				OUT									0.8 v	2.0 v			A to 3			
			61						OUT							2.0 v	0.8 v			A to 5			
			62									OUT				2.0 v	2.0 v			A to 7			
			63											OUT	2.0 v	0.8 v	0.8 v			A to 9			
	t_{PHL}		64	OUT											0.8 v	0.8 v	IN	0.8 v		B to 0	35	140	
			65		OUT											0.8 v		2.0 v		B to 1			
			66					OUT								2.0 v		0.8 v		B to 4			
			67						OUT							2.0 v		2.0 v		B to 5			
			68										OUT		2.0 v	0.8 v		0.8 v		B to 8			
			69											OUT	2.0 v	0.8 v		2.0 v		B to 9			
			70			OUT									0.8 v	0.8 v		0.8 v		B to 2			
			71				OUT									0.8 v		2.0 v		B to 3			
			72							OUT						2.0 v		0.8 v		B to 6			
			73									OUT				2.0 v		2.0 v		B to 7			
	t_{PLH}		74	OUT											0.8 v	0.8 v	IN	0.8 v		B to 0	15	70	
			75		OUT											0.8 v		2.0 v		B to 1			
			76					OUT								2.0 v		0.8 v		B to 4			
			77						OUT							2.0 v		2.0 v		B to 5			
			78										OUT		2.0 v	0.8 v		0.8 v		B to 8			
			79											OUT	2.0 v	0.8 v		2.0 v		B to 9			
			80			OUT									0.8 v	0.8 v		0.8 v		B to 2			
			81				OUT									0.8 v		2.0 v		B to 3			
			82							OUT						2.0 v		0.8 v		B to 6			
			83									OUT				2.0 v		2.0 v		B to 7			
	t_{PHL}		84	OUT											0.8 v	IN	0.8 v	0.8 v		C to 0	35	140	
			85		OUT												0.8 v	2.0 v		C to 1			
			86			OUT											2.0 v	0.8 v		C to 2			
			87				OUT										2.0 v	2.0 v		C to 3			
			88										OUT		2.0 v		0.8 v	0.8 v		C to 8			
			89											OUT	2.0 v			2.0 v		C to 9			
			90					OUT							0.8 v			0.8 v		C to 4			
			91						OUT									2.0 v		C to 5			
			92							OUT							2.0 v	0.8 v		C to 6			
			93									OUT					2.0 v	2.0 v		C to 7			

See footnote at end of device type 06.

TABLE III. Group A inspection for device type 06 [1/]. - Continued

Subgroup	Symbol	MIL-STD-883 method	Case E	1	2	3	4	5	6	7	8	9	10	11	12	13	14	15	16	Meas. terminal	Test limits		
			Test No.	0	1	2	3	4	5	6	GND	7	8	9	D	C	B	A	V_{CC}		Min	Max	Unit
9 T_C = 25° C	t_{PLH}	3003 (Fig. 5)	94	OUT							GND				0.8 v	IN	0.8 v	0.8 v	5.0 v	C to 0	15	70	ns
			95		OUT												0.8 v	2.0 v		C to 1			
			96			OUT											2.0 v	0.8 v		C to 2			
			97				OUT										2.0 v	2.0 v		C to 3			
			98										OUT		2.0 v		0.8 v	0.8 v		C to 8			
			99											OUT	2.0 v			2.0 v		C to 9			
			100					OUT							0.8 v			0.8 v		C to 4			
			101						OUT									2.0 v		C to 5			
			102							OUT							2.0 v	0.8 v		C to 6			
			103									OUT					2.0 v	2.0 v		C to 7			
	t_{PHL}		104	OUT											IN	0.8 v	0.8 v	0.8 v		D to 0	35	140	
			105		OUT												0.8 v	2.0 v		D to 1			
			106			OUT											2.0 v	0.8 v		D to 2			
			107				OUT										2.0 v	2.0 v		D to 3			
			108					OUT								2.0 v	0.8 v	0.8 v		D to 4			
			109						OUT								0.8 v	2.0 v		D to 5			
			110							OUT							2.0 v	0.8 v		D to 6			
			111									OUT					2.0 v	2.0 v		D to 7			
			112										OUT			0.8 v	0.8 v	0.8 v		D to 8			
			113											OUT		0.8 v	0.8 v	2.0 v		D to 9			
	t_{PLH}		114	OUT											IN	0.8 v	0.8 v	0.8 v		D to 0	15	70	
			115		OUT												0.8 v	2.0 v		D to 1			
			116			OUT											2.0 v	0.8 v		D to 2			
			117				OUT										2.0 v	2.0 v		D to 3			
			118					OUT								2.0 v	0.8 v	0.8 v		D to 4			
			119						OUT								0.8 v	2.0 v		D to 5			
			120							OUT							2.0 v	0.8 v		D to 6			
			121									OUT					2.0 v	2.0 v		D to 7			
			122										OUT			0.8 v	0.8 v	0.8 v		D to 8			
			123											OUT		0.8 v	0.8 v	2.0 v		D to 9			
10 T_C=125° C	t_{PHL}		124	OUT											0.8 v	0.8 v	0.8 v	IN		A to 0	30	160	
			125			OUT										0.8 v	2.0 v			A to 2			
			126					OUT								2.0 v	0.8 v			A to 4			
			127							OUT						2.0 v	2.0 v			A to 6			
			128										OUT		2.0 v	0.8 v	0.8 v			A to 8			
			129		OUT										0.8 v	0.8 v	0.8 v			A to 1			
			130				OUT									0.8 v	2.0 v			A to 3			
			131						OUT							2.0 v	0.8 v			A to 5			
			132									OUT				2.0 v	2.0 v			A to 7			
			133											OUT	2.0 v	0.8 v	0.8 v			A to 9			
	t_{PLH}		134	OUT											0.8 v	0.8 v	0.8 v	IN		A to 0	10	90	
			135			OUT										0.8 v	2.0 v			A to 2			
			136					OUT								2.0 v	0.8 v			A to 4			
			137							OUT						2.0 v	2.0 v			A to 6			
			138										OUT		2.0 v	0.8 v	0.8 v			A to 8			
			139		OUT										0.8 v	0.8 v	0.8 v			A to 1			
			140				OUT									0.8 v	2.0 v			A to 3			
			141						OUT							2.0 v	0.8 v			A to 5			
			142									OUT				2.0 v	2.0 v			A to 7			
			143											OUT	2.0 v	0.8 v	0.8 v			A to 9			

See footnote at end of device type 06.

TABLE III. Group A inspection for device type 06 [1/]. - Continued

Subgroup	Symbol	MIL-STD-883 method	Case E Test No.	1 0	2 1	3 2	4 3	5 4	6 5	7 6	8 GND	9 7	10 8	11 9	12 D	13 C	14 B	15 A	16 V_{CC}	Meas. terminal	Test limits Min	Max	Unit
10 $T_C = 125°C$	t_{PHL}	3003 (Fig. 5)	144	OUT							GND				0.8 v	0.8 v	IN	0.8 v	5.0 v	B to 0	30	160	μA
			145		OUT											0.8 v		2.0 v		B to 1			
			146					OUT								2.0 v		0.8 v		B to 4			
			147						OUT							2.0 v		2.0 v		B to 5			
			148										OUT		2.0 v	0.8 v		0.8 v		B to 8			
			149											OUT	2.0 v	0.8 v		2.0 v		B to 9			
			150			OUT									0.8 v	0.8 v		0.8 v		B to 2			
			151				OUT									0.8 v		2.0 v		B to 3			
			152							OUT						2.0 v		0.8 v		B to 6			
			153									OUT				2.0 v		2.0 v		B to 7			
	t_{PLH}		154	OUT											0.8 v	0.8 v	IN	0.8 v		B to 0	10	90	
			155		OUT											0.8 v		2.0 v		B to 1			
			156					OUT								2.0 v		0.8 v		B to 4			
			157						OUT							2.0 v		2.0 v		B to 5			
			158										OUT		2.0 v	0.8 v		0.8 v		B to 8			
			159											OUT	2.0 v	0.8 v		2.0 v		B to 9			
			160			OUT									0.8 v	0.8 v		0.8 v		B to 2			
			161				OUT									0.8 v		2.0 v		B to 3			
			162							OUT						2.0 v		0.8 v		B to 6			
			163									OUT				2.0 v		2.0 v		B to 7			
	t_{PHL}		164	OUT											0.8 v	IN	0.8 v	0.8 v		C to 0	30	160	
			165		OUT												0.8 v	2.0 v		C to 1			
			166			OUT											2.0 v	0.8 v		C to 2			
			167				OUT										2.0 v	2.0 v		C to 3			
			168										OUT		2.0 v		0.8 v	0.8 v		C to 8			
			169											OUT	2.0 v			2.0 v		C to 9			
			170					OUT							0.8 v			0.8 v		C to 4			
			171						OUT									2.0 v		C to 5			
			172							OUT							2.0 v	0.8 v		C to 6			
			173									OUT					2.0 v	2.0 v		C to 7			
	t_{PLH}		174	OUT											0.8 v	IN	0.8 v	0.8 v		C to 0	10	90	
			175		OUT												0.8 v	2.0 v		C to 1			
			176			OUT											2.0 v	0.8 v		C to 2			
			177				OUT										2.0 v	2.0 v		C to 3			
			178										OUT		2.0 v		0.8 v	0.8 v		C to 8			
			179											OUT	2.0 v			2.0 v		C to 9			
			180					OUT							0.8 v			0.8 v		C to 4			
			181						OUT									2.0 v		C to 5			
			182							OUT							2.0 v	0.8 v		C to 6			
			183									OUT					2.0 v	2.0 v		C to 7			
	t_{PHL}		184	OUT											IN	0.8 v		0.8 v		D to 0	30	160	
			185		OUT												0.8 v	2.0 v		D to 1			
			186			OUT											2.0 v	0.8 v		D to 2			
			187				OUT										2.0 v	2.0 v		D to 3			
			188					OUT								2.0 v	0.8 v	0.8 v		D to 4			
			189						OUT								0.8 v	2.0 v		D to 5			
			190							OUT							2.0 v	0.8 v		D to 6			
			191									OUT					2.0 v	2.0 v		D to 7			
			192										OUT			0.8 v	0.8 v	0.8 v		D to 8			
			193											OUT		0.8 v	0.8 v	2.0 v		D to 9			

See footnote at end of device type 06.

TABLE III. Group A inspection for device type 06 1/. - Continued

Subgroup	Symbol	MIL-STD-883 method	Case E	1	2	3	4	5	6	7	8	9	10	11	12	13	14	15	16	Meas. terminal	Test limits		
			Test No.	0	1	2	3	4	5	6	GND	7	8	9	D	C	B	A	V_{CC}		Min	Max	Unit
10	t_{PLH}	3003	194	OUT							GND				IN	0.8 v	0.8 v	0.8 v	5.0 v	D to 0	10	90	μA
T_C = 125° C		(Fig. 5)	195		OUT												0.8 v	2.0 v		D to 1			
			196			OUT											2.0 v	0.8 v		D to 2			
			197				OUT										2.0 v	2.0 v		D to 3			
			198					OUT								2.0 v	0.8 v	0.8 v		D to 4			
			199						OUT								0.8 v	2.0 v		D to 5			
			200							OUT							2.0 v	0.8 v		D to 6			
			201									OUT					2.0 v	2.0 v		D to 7			
			202										OUT			0.8 v	0.8 v	0.8 v		D to 8			
			203											OUT		0.8 v	0.8 v	2.0 v		D to 9			
11	Same tests, terminal conditions and limits as for subgroup 10, except T_C = -55° C.																						

1/ Terminal conditions (pins not designated may be H ≥ 2.0V, or L ≤ 0.8V, or open).

TABLE III. Group A inspection for device type 07. 1/

Subgroup	Symbol	MIL-STD-883 method	Cases E, F	1	2	3	4	5	6	7	8	9	10	11	12	13	14	15	16	Meas. terminal	Test limits		
			Test No.	A2	A3	5	6	7	8	9	GND	4	3	2	1	0	A1	A0	V_{CC}		Min	Max	Unit
1 T_C = 25° C	V_{OL}	3007	1	0.7 V	0.7 V						GND					4.8 mA	0.7 V	0.7 V	4.5 V	0		0.3	V
			2												4.8 mA		0.7 V	2.0 V		1			
			3											4.8 mA			2.0 V	0.7 V		2			
			4										4.8 mA				2.0 V	2.0 V		3			
			5	2.0 V								4.8 mA					0.7 V	0.7 V		4			
			6			4.8 mA											0.7 V	2.0 V		5			
			7				4.8 mA										2.0 V	0.7 V		6			
			8					4.8 mA									2.0 V	2.0 V		7			
			9	0.7 V	2.0 V				4.8 mA								0.7 V	0.7 V		8			
			10	0.7 V	2.0 V					4.8 mA							0.7 V	2.0 V		9			
	V_{OH}	3006	11	GND	2.0 V											-.4 mA	GND	0.7 V		0	2.4		
			12	GND											-.4 mA		GND	2.0 V		1			
			13	0.7 V										-.4 mA			4.5 V	GND		2			
			14	GND									-.4 mA				2.0 V	4.5 V		3			
			15	2.0 V								-.4 mA					GND	GND		4			
			16	4.5 V	0.7 V	-.4 mA											2.0 V	4.5 V		5			
			17	4.5 V	GND		-.4 mA										0.7 V	GND		6			
			18	4.5 V	GND			-.4 mA									0.7 V	4.5 V		7			
			19	GND	4.5 V				-.4 mA								2.0 V	GND		8			
			20	GND	4.5 V					-.4 mA							2.0 V	4.5 V		9			
	V_{IC}		21	-10mA																A2		-1.5	
			22		-10mA															A3			
			23														-10 mA			A1			
			24															-10 mA		A0			
	I_{IH1}	3010	25	2.4 V															5.5 V	A2		20	μA
			26		2.4 V															A3			
			27														2.4 V			A1			
			28															2.4 V		A0			
	I_{IH2}		29	5.5 V																A2		100	
			30		5.5 V															A3			
			31														5.5 V			A1			
			32															5.5 V		A0			
	I_{IL}	3009	33	0.3 V																A2	-176	-400	
			34		0.3 V															A3			
			35														0.3 V			A1			
			36															0.3 V		A0			
	I_{CC}	3005	37	GND	GND												GND	GND		V_{CC}		13	mA
	I_{OS}	3011	38			GND														5	-2.5	-25	
			39				GND													6			
			40					GND												7			
			41						GND											8			
			42							GND										9			
			43									GND								4			
			44										GND							3			
			45											GND						2			
			46												GND					1			
			47													GND				0			
2	Same tests, terminal conditions and limits as subgroup 1, except T_C = 125° C and V_{IC} tests are omitted.																						
3	Same tests, terminal conditions and limits as subgroup 1, except T_C = -55° C and V_{IC} tests are omitted.																						

See footnote at end of device type 07.

TABLE III. Group A inspection for device type 07 - Continued. 1/

Subgroup	Symbol	MIL-STD-883 method	Cases E, F	1	2	3	4	5	6	7	8	9	10	11	12	13	14	15	16	Meas. terminal	Test limits Min	Test limits Max	Test limits Unit
			Test No.	A2	A3	5	6	7	8	9	GND	4	3	2	1	0	A1	A0	VCC				
9	t_{PHL}	3003	48	GND	GND						GND				OUT		GND	IN	5.0 V	A0 to 1	12	42	ns
$T_C = 25°C$		(Fig 5)	49	GND	GND								OUT				5.0 V			A0 to 3			
			50	5.0 V	GND	OUT											GND			A0 to 5			
			51	5.0 V	GND			OUT									5.0 V			A0 to 7			
			52	GND	5.0 V					OUT							GND			A0 to 9			
			53	GND	GND											OUT	GND			A0 to 0			
			54	GND	GND									OUT			5.0 V			A0 to 2			
			55	5.0 V	GND							OUT					GND			A0 to 4			
			56	5.0 V	GND		OUT										5.0 V			A0 to 6			
			57	GND	5.0 V				OUT								GND			A0 to 8			
			58	GND	GND									OUT			IN	GND		A1 to 2			
			59	GND	GND								OUT					5.0 V		A1 to 3			
			60	5.0 V	GND		OUT											GND		A1 to 6			
			61	5.0 V	GND			OUT										5.0 V		A1 to 7			
			62	GND	GND											OUT		5.0 V		A1 to 0			
			63	GND	GND										OUT			5.0 V		A1 to 1			
			64	5.0 V	GND							OUT						5.0 V		A1 to 4			
			65	5.0 V	GND	OUT												5.0 V		A1 to 5			
			66	GND	5.0 V				OUT									GND		A1 to 8			
			67	GND	5.0 V					OUT								5.0 V		A1 to 9			
			68	IN	GND							OUT					GND	GND		A2 to 4			
			69		GND	OUT											GND	5.0 V		A2 to 5			
			70		GND		OUT										5.0 V	GND		A2 to 6			
			71		GND			OUT									5.0 V	5.0 V		A2 to 7			
			72		GND										OUT		5.0 V	5.0 V		A2 to 1			
			73		GND									OUT			5.0 V	GND		A2 to 2			
			74		GND								OUT				5.0 V	5.0 V		A2 to 3			
			75		5.0 V				OUT								GND	GND		A2 to 8			
			76		5.0 V					OUT							GND	5.0 V		A2 to 9			
			77		GND											OUT	GND	GND		A2 to 0			
			78	GND	IN				OUT								GND	GND		A3 to 8			
			79	GND						OUT							GND	5.0 V		A3 to 9			
			80	GND												OUT	GND	GND		A3 to 0			
			81	GND											OUT		GND	5.0 V		A3 to 1			
			82	GND										OUT			5.0 V	GND		A3 to 2			
			83	GND									OUT				5.0 V	5.0 V		A3 to 3			
			84	5.0 V								OUT					GND	GND		A3 to 4			
			85	5.0 V		OUT											GND	5.0 V		A3 to 5			
			86	5.0 V			OUT										5.0 V	GND		A3 to 6			
			87	5.0 V				OUT									5.0 V	5.0 V		A3 to 7			
	t_{PLH}	3003	88	GND	GND										OUT		GND	IN		A0 to 1			
		(Fig 5)	89	GND	GND								OUT				5.0 V			A0 to 3			
			90	5.0 V	GND	OUT											GND			A0 to 5			
			91	5.0 V	GND			OUT									5.0 V			A0 to 7			
			92	GND	5.0 V					OUT							GND			A0 to 9			
			93	GND	GND											OUT	GND			A0 to 0			
			94	GND	GND									OUT			5.0 V			A0 to 2			
			95	5.0 V	GND							OUT					GND			A0 to 4			
			96	5.0 V	GND		OUT										5.0 V			A0 to 6			
			97	GND	5.0 V				OUT								GND			A0 to 8			

See footnote at end of device type 07.

TABLE III. Group A inspection for device type 07 - Continued. 1/

Subgroup	Symbol	MIL-STD-883 method	Cases E, F	1	2	3	4	5	6	7	8	9	10	11	12	13	14	15	16	Meas. terminal	Test limits Min	Max	Unit
			Test No.	A2	A3	5	6	7	8	9	GND	4	3	2	1	0	A1	A0	V_{CC}				
9	t_{PLH}	3003	98	GND	GND						GND			OUT			IN	GND	5.0 V	A1 to 2	12	42	ns
T_C = 25°C		(Fig 5)	99	GND	GND								OUT					5.0 V		A1 to 3			
			100	5.0 V	GND		OUT											GND		A1 to 6			
			101	5.0 V	GND			OUT										5.0 V		A1 to 7			
			102	GND	GND											OUT		5.0 V		A1 to 0			
			103	GND	GND										OUT			5.0 V		A1 to 1			
			104	5.0 V	GND							OUT						5.0 V		A1 to 4			
			105	5.0 V	GND	OUT												5.0 V		A1 to 5			
			106	GND	5.0 V				OUT									GND		A1 to 8			
			107	GND	5.0 V					OUT								5.0 V		A1 to 9			
			108	IN	GND							OUT					GND	GND		A2 to 4			
			109		GND	OUT											GND	5.0 V		A2 to 5			
			110		GND		OUT										5.0 V	GND		A2 to 6			
			111		GND			OUT									5.0 V	5.0 V		A2 to 7			
			112		GND										OUT		5.0 V	5.0 V		A2 to 1			
			113		GND									OUT			5.0 V	GND		A2 to 2			
			114		GND								OUT				5.0 V	5.0 V		A2 to 3			
			115		5.0 V				OUT								GND	GND		A2 to 8			
			116		5.0 V					OUT							GND	5.0 V		A2 to 9			
			117		GND											OUT	GND	GND		A2 to 0			
			118	GND	IN				OUT								GND	GND		A3 to 8			
			119	GND						OUT							GND	5.0 V		A3 to 9			
			120	GND												OUT	GND	GND		A3 to 0			
			121	GND											OUT		GND	5.0 V		A3 to 1			
			122	GND										OUT			5.0 V	GND		A3 to 2			
			123	GND									OUT				5.0 V	5.0 V		A3 to 3			
			124	5.0 V								OUT					GND	GND		A3 to 4			
			125	5.0 V		OUT											GND	5.0 V		A3 to 5			
			126	5.0 V			OUT										5.0 V	GND		A3 to 6			
			127	5.0 V				OUT									5.0 V	5.0 V		A3 to 7			
10	t_{PHL}	3003	128	GND	GND										OUT		GND	IN		A0 to 1	10	50	
T_C = 125° C		(Fig 5)	129	GND	GND								OUT				5.0 V			A0 to 3			
			130	5.0 V	GND	OUT											GND			A0 to 5			
			131	5.0 V	GND			OUT									5.0 V			A0 to 7			
			132	GND	5.0 V					OUT							GND			A0 to 9			
			133	GND	GND											OUT	GND			A0 to 0			
			134	GND	GND									OUT			5.0 V			A0 to 2			
			135	5.0 V	GND							OUT					GND			A0 to 4			
			136	5.0 V	GND		OUT										5.0 V			A0 to 6			
			137	GND	5.0 V				OUT								GND			A0 to 8			
			138	GND	GND									OUT			IN	GND		A1 to 2			
			139	GND	GND								OUT					5.0 V		A1 to 3			
			140	5.0 V	GND		OUT											GND		A1 to 6			
			141	5.0 V	GND			OUT										5.0 V		A1 to 7			
			142	GND	GND											OUT		5.0 V		A1 to 0			
			143	GND	GND										OUT			5.0 V		A1 to 1			
			144	5.0 V	GND							OUT						5.0 V		A1 to 4			
			145	5.0 V	GND	OUT												5.0 V		A1 to 5			
			146	GND	5.0 V				OUT									GND		A1 to 8			
			147	GND	5.0 V					OUT								5.0 V		A1 to 9			

See footnote at end of device type 07.

TABLE III. Group A inspection for device type 07 - Continued. 1/

Subgroup	Symbol	MIL-STD-883 method	Cases E, F	1	2	3	4	5	6	7	8	9	10	11	12	13	14	15	16	Meas. terminal	Test limits		
			Test No.	A2	A3	5	6	7	8	9	GND	4	3	2	1	0	A1	A0	V_{CC}		Min	Max	Unit
10	t_{PHL}	3003	148	IN	GND						GND	OUT					GND	GND	5.0 V	A2 to 4	10	50	ns
T_C=125° C		(Fig 5)	149		GND	OUT											GND	5.0 V		A2 to 5			
			150		GND		OUT										5.0 V	GND		A2 to 6			
			151		GND			OUT									5.0 V	5.0 V		A2 to 7			
			152		GND										OUT		5.0 V	5.0 V		A2 to 1			
			153		GND									OUT			5.0 V	GND		A2 to 2			
			154		GND								OUT				5.0 V	5.0 V		A2 to 3			
			155		5.0 V				OUT								GND	GND		A2 to 8			
			156		5.0 V					OUT							GND	5.0 V		A2 to 9			
			157		GND											OUT	GND	GND		A2 to 0			
			158	GND	IN				OUT								GND	GND		A3 to 8			
			159	GND						OUT							GND	5.0 V		A3 to 9			
			160	GND												OUT	GND	GND		A3 to 0			
			161	GND											OUT		GND	5.0 V		A3 to 1			
			162	GND										OUT			5.0 V	GND		A3 to 2			
			163	GND									OUT				5.0 V	5.0 V		A3 to 3			
			164	5.0 V								OUT					GND	GND		A3 to 4			
			165	5.0 V		OUT											GND	5.0 V		A3 to 5			
			166	5.0 V			OUT										5.0 V	GND		A3 to 6			
			167	5.0 V				OUT									5.0 V	5.0 V		A3 to 7			
	t_{PLH}	3003	168	GND	GND										OUT		GND	IN		A0 to 1			
		(Fig 5)	169	GND	GND								OUT				5.0 V			A0 to 3			
			170	5.0 V	GND	OUT											GND			A0 to 5			
			171	5.0 V	GND			OUT									5.0 V			A0 to 7			
			172	GND	5.0 V					OUT							GND			A0 to 9			
			173	GND	GND											OUT	GND			A0 to 0			
			174	GND	GND									OUT			5.0 V			A0 to 2			
			175	5.0 V	GND							OUT					GND			A0 to 4			
			176	5.0 V	GND		OUT										5.0 V			A0 to 6			
			177	GND	5.0 V				OUT								GND			A0 to 8			
			178	GND	GND									OUT			IN	GND		A1 to 2			
			179	GND	GND								OUT					5.0 V		A1 to 3			
			180	5.0 V	GND		OUT											GND		A1 to 6			
			181	5.0 V	GND			OUT										5.0 V		A1 to 7			
			182	GND	GND											OUT		5.0 V		A1 to 0			
			183	GND	GND										OUT			5.0 V		A1 to 1			
			184	5.0 V	GND							OUT						5.0 V		A1 to 4			
			185	5.0 V	GND	OUT												5.0 V		A1 to 5			
			186	GND	5.0 V				OUT									GND		A1 to 8			
			187	GND	5.0 V					OUT								5.0 V		A1 to 9			
			188	IN	GND							OUT					GND	GND		A2 to 4			
			189		GND	OUT											GND	5.0 V		A2 to 5			
			190		GND		OUT										5.0 V	GND		A2 to 6			
			191		GND			OUT									5.0 V	5.0 V		A2 to 7			
			192		GND										OUT		5.0 V	5.0 V		A2 to 1			
			193		GND									OUT			5.0 V	GND		A2 to 2			
			194		GND								OUT				5.0 V	5.0 V		A2 to 3			
			195		5.0 V				OUT								GND	GND		A2 to 8			
			196		5.0 V					OUT							GND	5.0 V		A2 to 9			
			197		GND											OUT	GND	GND		A2 to 0			

See footnote at end of device type 07.

TABLE III. Group A inspection for device type 07 - Continued. 1/

Subgroup	Symbol	MIL-STD-883 method	Cases E, F	1	2	3	4	5	6	7	8	9	10	11	12	13	14	15	16	Meas. terminal	Test limits		
			Test No.	A2	A3	5	6	7	8	9	GND	4	3	2	1	0	A1	A0	V_{CC}		Min	Max	Unit
10 T_C=125° C	t_{PLH}	3003 (Fig 5)	198	GND	IN				OUT		GND						GND	GND	5.0 V	A3 to 8	10	50	ns
			199	GND						OUT							GND	5.0 V		A3 to 9			
			200	GND													GND	GND		A3 to 0			
			201	GND											OUT	OUT	GND	5.0 V		A3 to 1			
			202	GND										OUT			5.0 V	GND		A3 to 2			
			203	GND									OUT				5.0 V	5.0 V		A3 to 3			
			204	5.0 V								OUT					GND	GND		A3 to 4			
			205	5.0 V		OUT											GND	5.0 V		A3 to 5			
			206	5.0 V			OUT										5.0 V	GND		A3 to 6			
			207	5.0 V				OUT									5.0 V	5.0 V		A3 to 7			
11	Same tests, terminal conditions and limits as for subgroup 10, except T_C = -55° C.																						

1/ Terminal conditions (pins not designated may be H $\geq$ 2.0 V, or L $\leq$ 0.8 V, or open).

4.4.4 Group D inspection. Group D inspection shall be in accordance with table IV of method 5005 of MIL-STD-883. End-point electrical parameters shall be as specified in table II herein.

4.5 Methods of inspection. Methods of inspection shall be specified as follows:

4.5.1 Voltage and current. All voltages given are referenced to the microcircuit ground terminal. Currents given are conventional and positive when flowing into the referenced terminal.

5. PACKAGING

5.1 Packaging requirements. The requirements for packaging of microcircuits shall be as specified in MIL-M-38510.

6. NOTES

6.1 Notes. The notes specified in MIL-M-38510 are applicable to this specification.

6.2 Intended use. Microcircuits conforming to this specification are intended for logistic support of existing equipment.

6.3 Ordering data. The acquisition document should specify the following:

a. Complete part number (see 1.2).

b. Requirements for delivery of one copy of the quality conformance inspection data pertinent to the device inspection lot to be supplied with each shipment by the device manufacturer, if applicable.

c. Requirements for certificate of compliance, if applicable.

d. Requirements for notification of change of product or process to the contracting activity, if applicable.

e. Requirements for packaging and packing.

f. Requirements for special carriers, lead lengths, or lead forming, if applicable. These requirements shall not affect the part number. Unless otherwise specified, these requirements shall not apply to direct purchase by or direct shipment to the Government.

6.4 Abbreviations, symbols, and definitions. The abbreviations, symbols, and definitions used herein are defined in MIL-M-38510, MIL-STD-1331, and as follows:

GND	Electrical ground (common terminal)
I_{IN}	Current flowing into an input terminal
T_C	Case temperature
V_{IN}	Voltage level at an input terminal

6.5 Logistic support. Lead materials and finishes (see 3.3) are interchangeable. Unless otherwise specified, microcircuits acquired for Government logistic support will be acquired to device class B (see 1.2.2) and lead material and finish C (see 3.3). Longer length leads and lead forming shall not affect the part number.

6.6 Generic test data. Generic test data may be used to satisfy the requirements of 4.4.3. Group C generic test data shall be on date codes no more than one year old and on a die in the same microcircuit group (see appendix E of MIL-M-38510) with the same material, design and process and from the same plant as the die represented. Group D (see 4.4.4) generic data shall be on date codes no more than one year old and on the same package type (see terms, definitions, and symbols of MIL-M-38510) and from the same plant as the package represented. The vendor is required to retain the generic data for a period of not less than 36 months from the date of shipment.

6.7 Substitutability. The cross-reference information below is presented for the convenience of users. Microcircuits covered by this specification will functionally replace the listed generic-industry type. Generic-industry microcircuit types may not have equivalent operational performance characteristics across military temperature ranges or reliability factors equivalent to MIL-M-38510 device types and may have slight physical variations in relation to case size. The presence of this information shall not be deemed as permitting substitution of generic-industry types for MIL-M-38510 types or as a waiver of any of the provisions of MIL-M-38510.

Military device type	Generic-industry type
01	54L42
02	54L43
03	54L44
04	54L46
05	54L47
06	76L42A
07	93L01

6.8 Ordering guidance. Since the qualification and certification requirements have been removed from the specificaton, orders may be placed immediately.

6.9 Changes from previous issue. Asterisks are not used in this revision to identify changes with respect to the previous issue, due to the extensiveness of the changes.

Custodians:
Army - ER
Navy - EC
Air Force - 17

Review activities:
Army - AR, MI
Navy - SH, OS
Air Force - 11, 19, 85, 99
DLA - ES

User activities:
Army - SM
Navy - AS, CG, MC

Agent:
DLA - ES

Preparing activity:
Air Force - 17

(Project 5962-0674-1)