INCH-POUND

MIL-M-38510/27B
18 April 2008
SUPERSEDING
MIL-M-38510/27(USAF)
21 August 1972

MILITARY SPECIFICATION

MICROCIRCUITS, DIGITAL, TTL, LOW POWER, MULTIPLE NOR GATES, MONOLITHIC SILICON

Inactive for new design after 6 October 1995.

This specification is approved for use by all Departments and Agencies of the Department of Defense.

The requirements for acquiring the product herein shall consist of this specification sheet and MIL-PRF 38535

1. SCOPE

1.1 Scope. This specification covers the detail requirements for monolithic, silicon, TTL, low power, positive NOR logic gating microcircuits. Two product assurance classes and a choice of case outlines and lead finishes are provided for each type and are reflected in the complete part number. For this product, the requirements of MIL-M-38510 have been superseded by MIL-PRF-38535, (see 6.4).

1.2 Part or Identifying Number (PIN). The PIN is in accordance with MIL-PRF-38535 and as specified herein.

1.2.1 Device types. The device types are as follows:

Device type	Circuit
01	Quadruple, 2-input positive NOR gate

1.2.2 Device class. The device class is the product assurance level as defined in MIL-PRF-38535.

1.2.3 Case outlines. The case outlines are as designated in MIL-STD-1835 and as follows:

Outline letter	Descriptive designator	Terminals	Package style
A	GDFP5-F14 or CDFP6-F14	14	Flat pack
B	GDFP4-F14	14	Flat pack
C	GDIP1-T14 or CDIP2-T14	14	Dual-in-line
D	GDFP1-F14 or CDFP2-F14	14	Flat pack

Comments, suggestions, or questions on this document should be addressed to: Commander, Defense Supply Center Columbus, ATTN: DSCC-VAS, P. O. Box 3990, Columbus, OH 43218-3990, or emailed to bipolar@dla.mil. Since contact information can change, you may want to verify the currency of this address information using the ASSIST Online database at http://assist.daps.dla.mil.

AMSC N/A FSC 5962

1.3 Absolute maximum ratings.

Supply voltage range	0 V dc to 7.0 V dc
Input voltage range	0 V dc to 5.5 V dc
Storage temperature range	-65°C to +150°C
Maximum power dissipation, P_D 1/	4.2 mW dc
Lead temperature (soldering 10 seconds)	300°C
Thermal resistance, junction-to-case (θ_{JC})	(See MIL-STD-1835)
Junction temperature (T_J)	175°C

1.4 Recommended operating conditions.

Supply voltage	4.5 V dc minimum to 5.5 V dc maximum
Minimum high level input voltage	2.0 V dc
Maximum low level input voltage	0.7 V dc
Normalized fanout (each output) 2/	10 maximum
Case operating temperature range (T_C)	-55°C to 125°C

2. APPLICABLE DOCUMENT

2.1 General. The documents listed in this section are specified in sections 3, 4, or 5 of this specification. This section does not include documents cited in other sections of this specification or recommended for additional information or as examples. While every effort has been made to ensure the completeness of this list, document users are cautioned that they must meet all specified requirements of documents cited in sections 3, 4, or 5 of this specification, whether or not they are listed.

2.2 Government documents.

2.2.1 Specifications and standards. The following specifications and standards form a part of this specification to the extent specified herein. Unless otherwise specified, the issues of these documents are those cited in the solicitation or contract.

DEPARTMENT OF DEFENSE SPECIFICATIONS

MIL-PRF-38535 - Integrated Circuits (Microcircuits) Manufacturing, General Specification for.

DEPARTMENT OF DEFENSE STANDARDS

MIL-STD-883 - Test Method Standard for Microelectronics.
MIL-STD-1835 - Interface Standard Electronic Component Case Outlines

(Copies of these documents are available online at http://assist.daps.dla.mil/quicksearch/ or from the Standardization Document Order Desk, 700 Robbins Avenue, Building 4D, Philadelphia, PA 19111-5094.)

2.3 Order of precedence. Unless otherwise noted herein or in the contract, in the event of a conflict between the text of this specification and the references cited herein, the text of this document takes precedence. Nothing in this document, however, supersedes applicable laws and regulations unless a specific exemption has been obtained.

1/ Must withstand the added P_D due to short circuit condition (e.g. I_{OS}) at one output for 5 seconds duration.
2/ Device will fanout in both high and low levels to the specified number of inputs of the same device type as that being tested.

3. REQUIREMENTS

3.1 Qualification. Microcircuits furnished under this specification shall be products that are manufactured by a manufacturer authorized by the qualifying activity for listing on the applicable qualified manufacturers list before contract award (see 4.3 and 6.3).

3.2 Item requirements. The individual item requirements shall be in accordance with MIL-PRF-38535 and as specified herein or as modified in the device manufacturer's Quality Management (QM) plan. The modification in the QM plan shall not affect the form, fit, or function as described herein.

3.3 Design, construction, and physical dimensions. The design, construction, and physical dimensions shall be as specified in MIL-PRF-38535 and herein.

3.3.1 Logic diagram and terminal connections. The logic diagram and terminal connections shall be as specified on figure 1.

3.3.2 Truth table and logic equation. The truth table and logic equation shall be as specified on figure 2.

3.3.3 Schematic circuits. The schematic circuits shall be maintained by the manufacturer and made available to the qualifying activity and the preparing activity upon request.

3.3.4 Case outlines. Case outlines shall be as specified in 1.2.3.

3.4 Lead material and finish. Lead material and finish shall be in accordance with MIL-PRF-38535 (see 6.6).

3.5 Electrical performance characteristics. The electrical performance characteristics are as specified in table 1 and apply over the full recommended case operating temperature range, unless otherwise specified.

3.6 Electrical test requirements. The electrical test requirements for each device class shall be the subgroups specified in table II. The electrical tests for each subgroup are described in table III.

3.7 Marking. Marking shall be in accordance with MIL-PRF-38535.

3.8 Microcircuit group assignment. The devices covered by this specification shall be in microcircuit group number 15 (see MIL-PRF-38535, appendix A).

4. VERIFICATION

4.1 Sampling and inspection. Sampling and inspection procedures shall be in accordance with MIL-PRF-38535 or as modified in the device manufacturer's Quality Management (QM) plan. The modification in the QM plan shall not effect the form, fit, or function as described herein.

4.2 Qualification inspection. Qualification inspection shall be in accordance with MIL-PRF-38535.

4.3 Screening. Screening shall be in accordance with MIL-PRF-38535 and shall be conducted on all devices prior to qualification and conformance inspection. The following additional criteria shall apply:

a. The burn-in test duration, test condition, and test temperature, or approved alternatives shall be as specified in the device manufacturer's QM plan in accordance with MIL-PRF-38535. The burn-in test circuit shall be maintained under document control by the device manufacturer's Technology Review Board (TRB) in accordance with MIL-PRF-38535 and shall be made available to the acquiring or preparing activity upon request. The test circuit shall specify the inputs, outputs, biases, and power dissipation, as applicable, in accordance with the intent specified in test method 1015 of MIL-STD-883.

b. Interim and final electrical test parameters shall be as specified in table II, except interim electrical parameters test prior to burn-in is optional at the discretion of the manufacturer.

c. Additional screening for space level product shall be as specified in MIL-PRF-38535.

TABLE I. Electrical performance characteristics.

Test	Symbol	Conditions	Limits		Units
			Min	Max	
High level output voltage (except open collector output circuits)	V_{OH}	V_{CC} = 4.5 V, V_{IN} = 0.7 V I_{OH} = -100 μA 1/	2.4	- - -	V
Low level output voltage	V_{OL}	V_{CC} = 4.5 V, I_{OL} = 2 mA V_{IN} = 2.0 V for all inputs of gate under test 2/	- - -	0.3	V
High level input current	I_{IH1}	V_{CC} = 5.5 V, V_{IN} = 2.4 V 2/	- - -	10	μA
High level input current	I_{IH2}	V_{CC} = 5.5 V, V_{IN} = 5.5 V 2/	- - -	100	μA
Low level input current	I_{IL}	V_{CC} = 5.5 V, V_{IN} = 0.3 V 1/	-60	-180	μA
Short circuit output current	I_{OS}	V_{CC} = 5.5 V 1/ 3/	-3	-15	mA
High level supply current per gate	I_{CCH}	V_{CC} = 5.5 V 2/ V_{IN} = 0 V	- - -	0.4	mA
Low level supply current per gate	I_{CCL}	V_{CC} = 5.5 V 1/ V_{IN} = 5.5 V	- - -	0.65	mA
Propagation delay time, high to low level	t_{PHL}	V_{CC} = 5.0 V C_L = 50 pF R_L = 4 kΩ	3	99	ns
Propagation delay time, low to high level	t_{PLH}		3	90	ns

1/ All unspecified inputs at 5.5 volts.
2/ All unspecified inputs grounded.
3/ Not more than one output should be shorted at one time.

TABLE II. Electrical test requirements.

MIL-PRF-38535 Test requirement	Subgroups (see table III)	
	Class S Devices	Class B Devices
Interim electrical parameters	1	1
Final electrical test parameters	1*, 2, 3, 9,	1*, 2, 3, 9
Group A test requirements	1, 2, 3, 9, 10, 11	1, 2, 3, 9,
Group B electrical test parameters when using the method 5005 QCI option	1, 2, 3	N/A
Groups C end point electrical parameters	1, 2, 3	1, 2, 3
Additional electrical subgroups for group C periodic inspections	None	10, 11
Group D end point electrical parameters	1, 2, 3	1, 2, 3

*PDA applies to subgroup 1.

4.4 Technology Conformance Inspection (TCI). Technology conformance inspection shall be in accordance with MIL-PRF-38535 and herein for groups A, B, C, and D inspections (see 4.4.1 through 4.4.4).

4.4.1 Group A inspection. Group A inspection shall be in accordance with table III of MIL-PRF-38535 and as follows:

a. Tests shall be as specified in table II herein.

b. Subgroups 4, 5, 6, 7 and 8, shall be omitted.

4.4.2 Group B inspection. Group B inspection shall be in accordance with table II of MIL-PRF-38535.

4.4.3 Group C inspection. Group C inspection shall be in accordance with table IV of MIL-PRF-38535 and as follows:

a. End point electrical parameters shall be as specified in table II herein.

b. Subgroups 3 and 4 shall be added to the group C inspection requirements for class B devices and shall consist of the tests, conditions, and limits specified for subgroups 10 and 11 of group A. The sample size series number shall be 5 (45 devices accept on 0).

c. The steady-state life test duration, test condition, and test temperature, or approved alternatives shall be as specified in the device manufacturer's QM plan in accordance with MIL-PRF-38535. The burn-in test circuit shall be maintained under document control by the device manufacturer's Technology Review Board (TRB) in accordance with MIL-PRF-38535 and shall be made available to the acquiring or preparing activity upon request. The test circuit shall specify the inputs, outputs, biases, and power dissipation, as applicable, in accordance with the intent specified in test method 1005 of MIL-STD-883.

4.4.4 Group D inspection. Group D inspection shall be in accordance with table V of MIL-PRF-38535. End-point electrical parameters shall be as specified in table II herein.

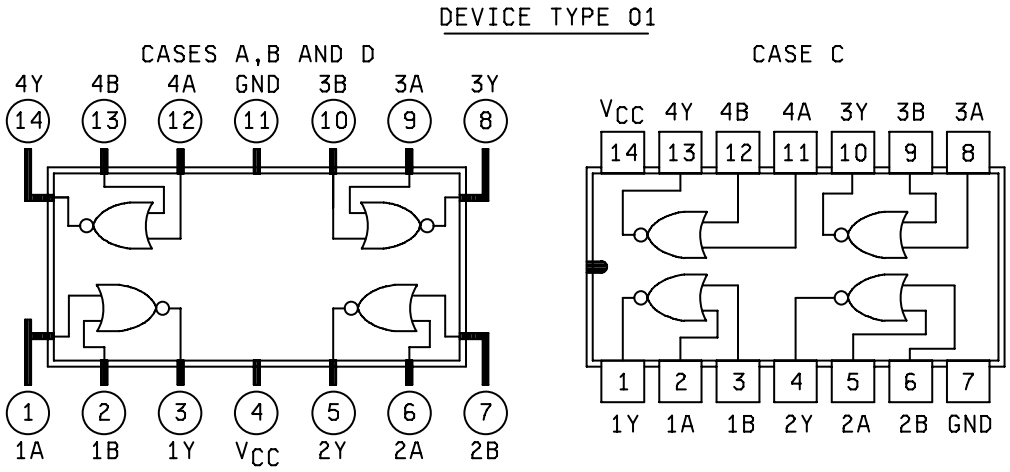

Figure 1. Logic diagram and terminal connections.

Truth table (each gate)

Inputs		Output
A	B	Y
H	X	L
X	H	L
L	L	H

Positive logic: $Y = \overline{A + B}$

Figure 2. Truth table and logic equation.

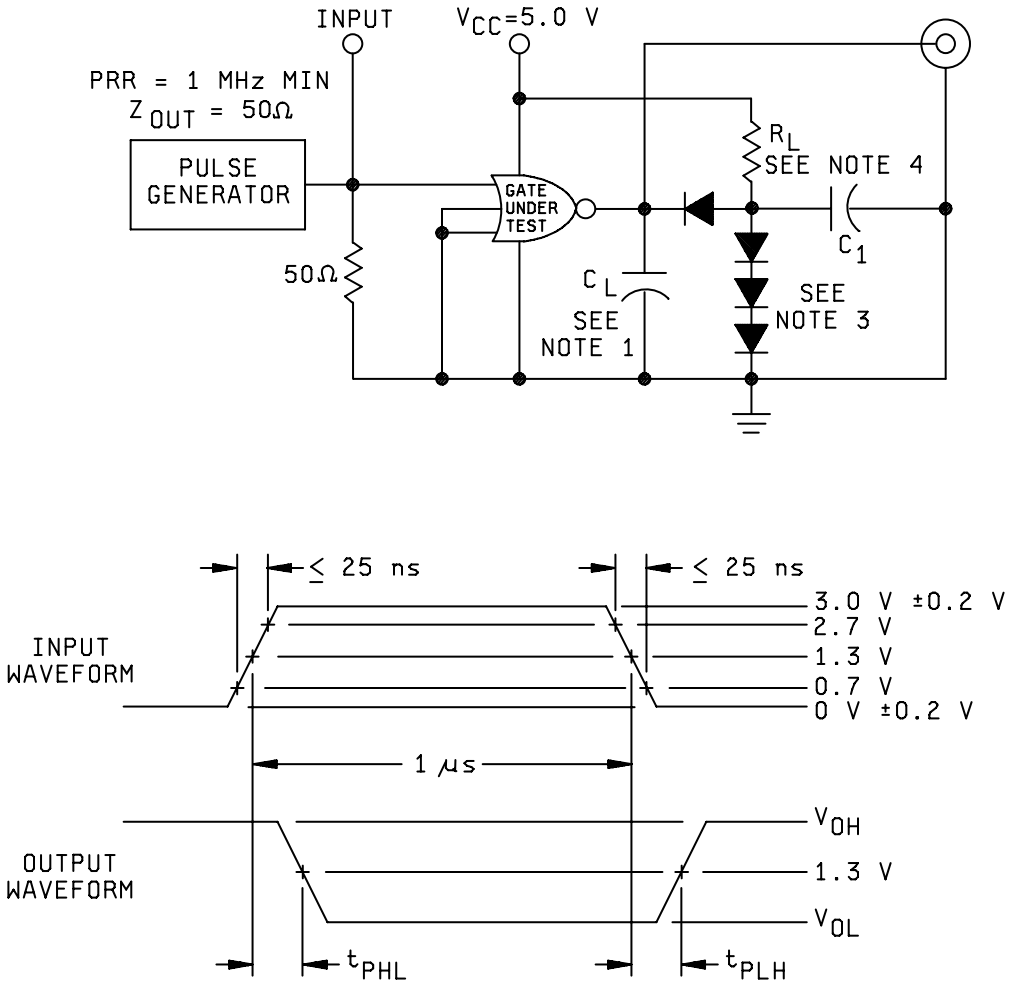

NOTES:

1/ The generator has the following characteristics: Vgen = 3.0 V, $t_{TLH} = t_{THL} \leq 25$ ns, $t_P = 1.0$ µs, PRR ≤ 500 kHz and $Z_{OUT} \approx 50\ \Omega$.

2/ All diodes are 1N3064 or equivalent.

3/ C_L includes probe and jig capacitance.

4/ Each gate tested separately.

FIGURE 3. Switching time test circuit.

TABLE III. Group A inspection for device type 01.
Terminal conditions (pins not designated are open)

Subgroup	Symbol	MIL-STD-883 method	Case A,B,D	1	2	3	4	5	6	7	8	9	10	11	12	13	14	Meas. terminal	Test limits		
			Case C	2	3	1	14	4	5	6	10	8	9	7	11	12	13		Min	Max	Unit
			Test No.	1A	1B	1Y	V_{CC}	2Y	2A	2B	3Y	3A	3B	GND	4A	4B	4Y				
1	V_{OL}	3007	1	2.0V	GND	2.0mA	4.5V		GND	GND		GND	GND	GND	GND	GND		1Y		0.3	V
T_C = 25°C	"	"	2	GND	2.0V	2.0mA	"		"	"		"	"	"	"	"		1Y		"	"
"	"	"	3	"	GND		"	2.0mA	2.0V	"		"	"	"	"	"		2Y		"	"
"	"	"	4	"	"		"	2.0mA	GND	2.0V		"	"	"	"	"		2Y		"	"
"	"	"	5	"	"		"		"	GND	2.0mA	2.0V	"	"	"	"		3Y		"	"
"	"	"	6	"	"		"		"	"	2.0mA	GND	2.0V	"	"	"		3Y		"	"
"	"	"	7	"	"		"		"	"		"	GND	"	2.0V	"	2.0mA	4Y		"	"
"	"	"	8	"	"		"		"	"		"	GND	"	GND	2.0V	2.0mA	4Y		"	"
	V_{OH}	3006	9	0.7V	0.7V	-100μA	"		5.5V	5.5V		5.5V	5.5V	"	5.5V	5.5V		1Y	2.4		"
	"	"	10	5.5V	5.5V		"	-100μA	0.7V	0.7V		"	"	"	"	"		2Y	"		"
	"	"	11	"	"		"		5.5V	5.5V	-100μA	0.7V	0.7V	"	"	"		3Y	"		"
	"	"	12	"	"		"		5.5V	5.5V		5.5V	5.5V	"	0.7V	0.7V	-100μA	4Y	"		"
	I_{OS}	3011	13	GND	GND	GND	5.5V							"				1Y	-3.0	-15	mA
	"	"	14				"	GND	GND	GND				"				2Y	"	"	"
	"	"	15				"				GND	GND	GND	"				3Y	"	"	"
	"	"	16				"							"	GND	GND	GND	4Y	"	"	"
	I_{IH1}	3010	17	2.4V	GND		"		GND	GND		GND	GND	"	GND	GND		1A		10	μA
	"	"	18	GND	2.4V		"		"	"		"	"	"	"	"		1B		"	"
	"	"	19	"	GND		"		2.4V	"		"	"	"	"	"		2A		"	"
	"	"	20	"	"		"		GND	2.4V		"	"	"	"	"		2B		"	"
	"	"	21	"	"		"		"	GND		2.4V	"	"	"	"		3A		"	"
	"	"	22	"	"		"		"	"		GND	2.4V	"	"	"		3B		"	"
	"	"	23	"	"		"		"	"		"	GND	"	2.4V	"		4A		"	"
	"	"	24	"	"		"		"	"		"	"	"	GND	2.4V		4B		"	"
	I_{IH2}	"	25	5.5V	"		"		"	"		"	"	"	"	GND		1A		100	"
	"	"	26	GND	5.5V		"		"	"		"	"	"	"	"		1B		"	"
	"	"	27	"	GND		"		5.5V	"		"	"	"	"	"		2A		"	"
	"	"	28	"	"		"		GND	5.5V		"	"	"	"	"		2B		"	"
	"	"	29	"	"		"		"	GND		5.5V	"	"	"	"		3A		"	"
	"	"	30	"	"		"		"	"		GND	5.5v	"	"	"		3B		"	"
	"	"	31	"	"		"		"	"		"	GND	"	5.5V	"		4A		"	"
	"	"	32	"	"		"		"	"		"	"	"	GND	5.5V		4B		"	"
	I_{IL}	3009	33	0.3V	5.5V		"		5.5V	5.5V		5.5V	5.5V	"	5.5V	"		1A	-0.06	-0.18	mA
	"	"	34	5.5V	0.3V		"		"	"		"	"	"	"	"		1B	"	"	"
	"	"	35	"	5.5V		"		0.3V	"		"	"	"	"	"		2A	"	"	"
	"	"	36	"	"		"		5.5V	0.3V		"	"	"	"	"		2B	"	"	"
	"	"	37	"	"		"		"	5.5V		0.3V	"	"	"	"		3A	"	"	"
	"	"	38	"	"		"		"	"		5.5V	0.3V	"	"	"		3B	"	"	"
	"	"	39	"	"		"		"	"		"	5.5V	"	0.3V	"		4A	"	"	"
	"	"	40	"	"		"		"	"		"	"	"	5.5V	0.3V		4B	"	"	"
	I_{CCH}	3005	41	GND	GND		"		GND	GND		GND	GND	"	GND	GND		V_{CC}		1.6	mA
	I_{CCL}	3005	42	5.5V	GND		"		5.5V	GND		5.5V	GND	"	5.5V	GND		V_{CC}		2.6	mA
2	Same tests, terminal conditions and limits as subgroup 1, except T_C = 125°C																				
3	Same tests, terminal conditions and limits as subgroup 1, except T_C = -55°C																				

TABLE III. Group A inspection for device type 01 – Continued.
Terminal conditions (pins not designated are open)

Subgroup	Symbol	MIL-STD-883 method	Case A,B,D	1	2	3	4	5	6	7	8	9	10	11	12	13	14	Meas. terminal	Test limits		
			Case C	2	3	1	14	4	5	6	10	8	9	7	11	12	13		Min	Max	Unit
			Test No.	1A	1B	1Y	V_{CC}	2Y	2A	2B	3Y	3A	3B	GND	4A	4B	4Y				
9	t_{PHL}	3003	43	IN	GND	OUT	5.0V							GND				1A to 1Y	3	66	ns
T_C = 25°C	“	(Fig. 3)	44				“	OUT	IN	GND				“				2A to 2Y	“	“	“
“	“	“	45				“				OUT	IN	GND	“				3A to 3Y	“	“	“
“	“	“	46				“							“	IN	GND	OUT	4A to 4Y	“	“	“
“	t_{PHL}	“	47	IN	GND	OUT	“							“				1A to 1Y	3	60	“
“	“	“	48				“	OUT	IN	GND				“				2A to 2Y	“	“	“
“	“	“	49				“				OUT	IN	GND	“				3A to 3Y	“	“	“
“	“	“	50				“							“	IN	GND	OUT	4A to 4Y	“	“	“
10	t_{PLH}	“	51	IN	GND	OUT	“							“				1A to 1Y	3	99	“
T_C=125°C	“	“	52				“	OUT	IN	GND				“				2A to 2Y	“	“	“
“	“	“	53				“				OUT	IN	GND	“				3A to 3Y	“	“	“
“	“	“	54				“							“	IN	GND	OUT	4A to 4Y	“	“	“
“	t_{PLH}	“	55	IN	GND	OUT	“							“				1A to 1Y	3	90	“
“	“	“	56				“	OUT	IN	GND				“				2A to 2Y	“	“	“
“	“	“	57				“				OUT	IN	GND	“				3A to 3Y	“	“	“
“	“	“	58				“							“	IN	GND	OUT	4A to 4Y	“	“	“
11	Same tests, terminal conditions and limits as for subgroup 10, except T_C = -55°C.																				

4.5 Methods inspection. Methods of inspection shall be as specified in the appropriate tables and as follows:

4.5.1 Voltage and current. All voltages given are referenced to the microcircuit ground terminal. Currents given are conventional current and positive when flowing into the referenced terminal.

5. PACKAGING

5.1 Packaging requirements. For acquisition purposes, the packaging requirements shall be as specified in the contract or order (see 6.2). When packaging of materiel is to be performed by DoD or in-house contractor personnel, these personnel need to contact the responsible packaging activity to ascertain packaging requirements. Packaging requirements are maintained by the Inventory Control Point's packaging activity within the Military Service or Defense Agency, or within the military service's system command. Packaging data retrieval is available from the managing Military Department's or Defense Agency's automated packaging files, CD-ROM products, or by contacting the responsible packaging activity.

6. NOTES

(This section contains information of a general or explanatory nature that may be helpful, but it is not mandatory)

6.1 Intended use. Microcircuits conforming to this specification are intended for logistic support of existing equipment.

6.2 Acquisition requirements. Acquisition documents should specify the following:

a. Title, number, and date of the specification.
b. PIN and compliance identifier, if applicable (see 1.2).
c. Requirements for delivery of one copy of the conformance inspection data pertinent to the device inspection lot to be supplied with each shipment by the device manufacturer, if applicable.
d. Requirement for certificate of compliance, if applicable.
e. Requirements for notification of change of product or process to acquiring activity in addition to notification to the qualifying activity, if applicable.
f. Requirements for failure analysis (including required test condition of method 5003), corrective action and reporting of results, if applicable.
g. Requirements for product assurance options.
h. Requirements for carriers, special lead lengths or lead forming, if applicable. These requirements shall not affect the part number. Unless otherwise specified, these requirements will not apply to direct purchase by or direct shipment to the Government.
i. Requirements for "JAN" marking.
j. Packaging requirements (see 5.1).

6.3 Qualification. With respect to products requiring qualification, awards will be made only for products which are, at the time of award of contract, qualified for inclusion in Qualified Manufacturers List QML-38535 whether or not such products have actually been so listed by that date. The attention of the contractors is called to these requirements, and manufacturers are urged to arrange to have the products that they propose to offer to the Federal Government tested for qualification in order that they may be eligible to be awarded contracts or purchase orders for the products covered by this specification. Information pertaining to qualification of products may be obtained from DSCC-VQ, 3990 E. Broad Street, Columbus, Ohio 43123-1199. An online listing of products qualified to this specification may be found in the Qualified Products Database (QPD) at http://assist.daps.dla.mil.

6.4 Superseding information. The requirements of MIL-M-38510 have been superseded to take advantage of the available Qualified Manufacturer Listing (QML) system provided by MIL-PRF-38535. Previous references to MIL-M-38510 in this document have been replaced by appropriate references to MIL-PRF-38535. All technical requirements now consist of this specification and MIL-PRF-38535. The MIL-M-38510 specification sheet number and PIN have been retained to avoid adversely impacting existing government logistics systems and contractor's parts lists.

6.5 Abbreviations, symbols and definitions. The abbreviations, symbols, and definitions used herein are defined in MIL-PRF-38535 and MIL-HDBK-1331, and as follows:

GND ..... Electrical ground (common terminal)
V_{IN} ..... Voltage level at an input terminal
I_{IN} ..... Current flowing into an input terminal

6.6 Logistic support. Lead materials and finishes (see 3.3) are interchangeable. Unless otherwise specified, microcircuits acquired for Government logistic support will be acquired to device class B (see 1.2.2), lead material and finish A (see 3.4). Longer lead lengths and lead forming shall not affect the part number.

6.7 Substitutability. The cross-reference information below is presented for the convenience of users. Microcircuits covered by this specification will functionally replace the listed generic-industry type. Generic-industry microcircuit types may not have equivalent operational performance characteristics across military temperature ranges or reliability factors equivalent to MIL-M-35810 device types and may have slight physical variations in relation to case size. The presence of this information should not be deemed as permitting substitution of generic-industry types for MIL-M-38510 types or as a waiver of any of the provisions of MIL-PRF-38535.

Device type	Commercial type
01	54L02

6.8 Changes from previous issue. Marginal notations are not used in this revision to identify changes with respect to the previous issue due to the extensiveness of the changes.

Custodians:
Army - CR
Navy - EC
Air Force - 11
DLA - CC

Preparing activity:
DLA - CC

(Project 5962-2008-003)

Review activities:
Army - MI, SM
Navy - AS, CG, MC, SH, TD
Air Force - 03, 19, 99

NOTE: The activities listed above were interested in this document as of the date of this document. Since organizations and responsibilities can change, you should verify the currency of the information above using the ASSIST Online database at http://assist.daps.dla.mil.