QUALIFICATION REQUIREMENT REMOVED

MIL-M-38510/202B
25 May 1984
SUPERSEDING
MIL-M-38510/202A
24 May 1982

MILITARY SPECIFICATION

MICROCIRCUITS, DIGITAL, 1024 BIT BIPOLAR PROGRAMMABLE READ-ONLY MEMORY (P-ROM), MONOLITHIC SILICON

INACTIVE FOR NEW DESIGN AFTER DATE OF THIS REVISION.

This specification is approved for use by all Departments and Agencies of the Department of Defense.

1. SCOPE

1.1 Scope. This specification covers the detail requirements for monolithic silicon, programmable read-only memory (P-ROM) microcircuits which employ the Avalanche-Induced Migration (AIM) bit programming system and for fixed-mask read-only memory (ROM) microcircuits employing the procedure specified in 3.7.3 herein. One product assurance classes and a choice of case outlines and lead finishes are provided for each type and are reflected in the part number.

1.2 Part number. The part number shall be in accordance with MIL-M-38510. With the exception that the "JAN" or "J" certification shall not be used.

1.2.1 Device type. The device type shall be as follows:

Device type	Circuit
01	256 word/4 bits per word P-ROM with uncommitted collector.
02	256 word/4 bits per word P-ROM with active pull-up and a third high impedance state output.

1.2.2 Device class. The device class shall be the product assurance level as defined in MIL-M-38510.

1.2.3 Case outline. The case outline shall be designated as follows:

Letter	Case outline, (see MIL-M-38510, appendix C
E	D-2 (16-lead, 1/4" x 7/8", dual-in-line package)
F	F-5 (16-lead, 1/4" x 3/8", flat package)

1.3 Absolute maximum ratings.

Supply voltage	7.0 V
Input voltage range	-1.5 V at -10 mA to 5.5 V
Storage temperature range	-65°C to +150°C
Lead temperature (soldering, 10 seconds)	+300°C
Thermal resistance, junction to case (θ_{JC}):	
Case E	0.021°C/mW
Case F	0.024°C/mW
Thermal resistance, junction to ambient (θ_{JA}):	
Case E	81°C/W
Case F	125°C/W
Output voltage applied	-0.5 V to $+V_{CC}$
Output sink current	+30 mA
Maximum power dissipation, (P_D) 1/	715 mW dc
Maximum junction temperature (T_J)	+175°C
Output voltage applied (programming only)	+28 V
Current into output (programming only)	210 mA

1/ Must withstand the added P_D due to short circuit tests (e.g., I_{OS}).

Beneficial comments (recommendations, additions, deletions) and any pertinent data which may be of use in improving this document should be addressed to: Rome Air Development Center, RBE-2, Griffiss AFB, NY 13441, by using the self-addressed Standardization Document Improvement Proposal (DD Form 1426) appearing at the end of this document or by letter.

1.4 Recommended operating conditions.

Supply voltage- - - - - - - - - - - - - - - - -	4.5 V minimum to 5.5 V maximum
Minimum high level input voltage- - - - - -	2.0 V
Maximum low level input voltage - - - - - - -	0.8 V
Normalized fanout (each output) 2/- - - - - -	30 maximum (16 mA)
Case operating temperature range- - - - - -	-55°C to +125°C

2. APPLICABLE DOCUMENTS

2.1 Government specifications and standards. Unless otherwise specified, the following specifications and standards, of the issue listed in that issue of the Department of Defense Index of Specifications and Standards specified in the solicitation, form a part of this specifictaion to the extent specified herein.

SPECIFICATION

MILITARY

MIL-M-38510 - Microcircuits, General Specification For.

STANDARD

MILITARY

MIL-STD-883 - Test Methods and Procedures for Microelectronics.

(Copies of specifications, standards, handbooks, drawings, and publications required by manufacturers in connection with specific acquisition functions should be obtained from the contracting activity or as directed by the contracting officer.)

2.2 Order of precedence. In the event of a conflict between the text of this specification and the references cited herein, the text of this specification shall take precedence.

3. REQUIREMENTS

3.1 Detail specifications. The individual item requirements shall be in accordance with MIL-M-38510, and as specified herein.

3.2 Design, construction, and physical dimensions. The design, construction, and physical dimensions shall be as specified in MIL-M-38510 and herein.

3.2.1 Terminal connections. The terminal connections shall be as specified on figure 1.

3.2.2 Truth tables. The truth tables shall be specified as follows:

3.2.2.1 Unprogrammed devices. The truth table for unprogrammed devices for contracts involving no altered item drawing shall be as specified on figure 2. When required in groups A, B, or C (see 4.4), the device shall be programmed by the manufacturer prior to test in a checkerboard pattern (a minimum of 50 percent of the total number of bits programmed) or to any altered item drawing pattern which includes at least 25 percent of the total number of bits programmed.

3.2.2.2 Programmed devices. The truth table for programmed devices shall be as specified by the altered item drawing.

3.2.3 Block diagram. The block diagram shall be as specified on figure 4.

3.2.4 Case outlines. The case outlines shall be in accordance with MIL-M-38510 and 1.2.3 herein.

2/ The device will fan out in both high and low levels to the specified number of inputs of the same device type as that being tested.

TABLE I. Electrical performance characteristics.

Test	Symbol	Conditions 1/	Device type	Limits Min	Limits Max	Unit
High level output voltage	V_{OH}	V_{CC} = 4.5 V, I_{OH} = -0.4 mA	01	2.4	---	V
		V_{CC} = 4.5 V, I_{OH} = -1.0 mA	02	2.4	---	V
Low level output voltage	V_{OL}	V_{CC} = 4.5 V, I_{OL} = 16 mA E_1 = E_2 = 0.4 V	01, 02	---	0.45	V
Input clamp voltage	V_{IC}	V_{CC} = 4.5 V, I_{IN} = -10 mA, T_C = 25°C	01, 02	---	-1.5	V
Maximum collector cut-off current	I_{CEX1}	V_{CC} = 5.5 V, E_1 = E_2 = 0.4 V V_{OH} = 5.5 V	01, 02	---	100	µA
	I_{CEX2}	V_{CC} = 5.5 V, V_O = 5.5 V, E_1 = E_2 = 2.4 V	01, 02	---	100	µA
	I_{CEX3}	V_{CC} = 5.5 V, V_O = 0.4 V, E_1 = E_2 = 2.4 V	01, 02	---	-40	µA
High level input current	I_{IH1}	V_{CC} = 5.5 V, V_{IN} = 2.4 V	01, 02	---	100	µA
	I_{IH2}	V_{CC} = 5.5 V, V_{IN} = 5.5 V	01, 02	---	100	µA
Low level input current	I_{IL}	V_{CC} = 5.5 V, V_{IN} = 0.4 V	01, 02	-0.2	-1.0	mA
Short circuit output current	I_{OS}	V_{CC} = 5.5 V 2/	01	-1.0	-6.0	mA
			02	-15	-60	mA
Supply current	I_{CC}	V_{CC} = 5.5 V, V_{IN} = 0	01, 02	---	130	mA
Propagation delay time high-to-low level logic, address to output	t_{PHL1}	V_{CC} = 5.0 V C_L = 30 pF minimum R_1 = 300Ω ±5% R_2 = 600Ω ±5% Figure 6	01, 02	20	100	ns
Propagation delay time low-to-high level logic, address to output	t_{PLH1}			20	100	ns
Propagation delay time high-to-low level logic, enable to output	t_{PHL2}			10	50	ns
Propagation delay time low-to-high level logic, enable to output	t_{PLH2}			10	50	ns

1/ Complete terminal conditions shall be specified on table III.

2/ Not more than one output shall be grounded at one time. Output shall be at high logic level prior to test.

TABLE II. Electrical test requirements.

MIL-STD-883 test requirements	Subgroups (see table III) Class B devices
Interim electrical test parameters (pre burn-in) (method 5004)	1
Final electrical test parameters (method 5004) for unprogrammed devices	1*, 2, 3, 7*
Final electrical test parameters (method 5004) for programmed devices	1*, 2, 3, 7*, 8, 9
Group A test requirements (method 5005)	1, 2, 3, 7, 8, 9, 10, 11
Group C end-point electrical test parameters (method 5005)	1, 2, 3, 7, 8
Group D end-point electrical test parameters (method 5005)	1, 2, 3, 7, 8

NOTES:
1. (*) indicates PDA applies to subgroups 1 and 7 (see 4.2c).
2. Any or all subgroups may be combined when using high-speed testers.
3. Subgroups 7 and 8 shall consist of verifying the pattern specified.

3.3 Lead material and finish. The lead material and finish shall be in accordance with MIL-M-38510 (see 6.4).

3.4 Electrical performance characteristics. The electrical performance characteristics are as specified in table I, and apply over the full recommended case operating temperature range, unless otherwise specified.

3.5 Electrical test requirements. The electrical tests shall be the subgroups specified in table II. The electrical tests for each subgroup are described in table III.

3.6 Marking. Marking shall be in accordance with MIL-M-38510. For programmed devices, the altered item drawing number shall be added to the marking by the programming activity. The "JAN" or "J" certification mark shall not be used.

3.7 Processing options. Since the P-ROM is an unprogrammed memory capable of being programmed by either the manufacturer or the user to result in a wide variety of ROM configurations, three processing options are provided for selection in the contract, using an altered item drawing.

3.7.1 Unprogrammed P-ROM delivered to the user. All testing shall be verified through group A testing as defined in 3.2.2.1, table II and table III. It is recommended that users perform subgroups 7 and 9 after programming to verify the specific program configuration.

3.7.2 Manufacturer-programmed P-ROM delivered to the user. All testing requirements and quality assurance provisions herein, including the requirements of the altered item drawing shall be satisfied by the manufacturer prior to delivery.

3.7.3 Fixed-mask ROM delivered to the user. The manufacturer may use fixed-mask procedures to produce a ROM in accordance with the altered item drawing by eliminating the emitter-base junction normally shorted during programming (using the same basic P-ROM die in all other respects). When fixed-mask ROM's are delivered to the user, the provisions of 3.7.2 shall apply.

3.8 Microcircuit group assignment. The devices covered by this specification shall be in microcircuit group number 7 (see MIL-M-38510, appendix E).

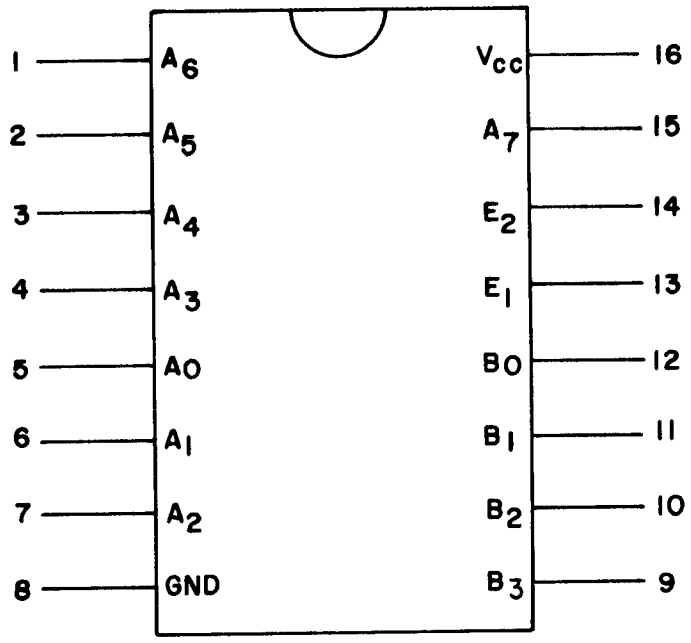

FIGURE 1. Terminal connections.

Word No.	Enable		Address								Data			
	E_1	E_2	A_7	A_6	A_5	A_4	A_3	A_2	A_1	A_0	B_3	B_2	B_1	B_0
NA	L	L	X	X	X	X	X	X	X	X	L	L	L	L
NA	L	H	X	X	X	X	X	X	X	X	OC	OC	OC	OC
NA	H	L	X	X	X	X	X	X	X	X	OC	OC	OC	OC
NA	H	H	X	X	X	X	X	X	X	X	OC	OC	OC	OC

NOTES:
1. NA = Not applicable.
2. X = Input may be high level, low level or open circuit.
3. OC = Open circuit (high resistance output).
4. Program read out can only be accomplished with both enable inputs at low level.

FIGURE 2. Truth table (unprogrammed).

Truth table.

Word	Address								Data			
	A_7	A_6	A_5	A_4	A_3	A_2	A_1	A_0	B_3	B_2	B_1	B_0
0	L	L	L	L	L	L	L	L	H	H	L	L
1	L	L	L	L	L	L	L	H	L	H	L	L
2	L	L	L	L	L	L	H	L	L	H	H	H
3	L	L	L	L	L	L	H	H	L	H	H	H
4	L	L	L	L	L	H	L	L	L	H	L	L
5	L	L	L	L	L	H	L	H	L	H	L	L
6	L	L	L	L	L	H	H	L	L	H	H	L
7	L	L	L	L	L	H	H	H	L	H	H	L
8	L	L	L	L	H	L	L	L	L	H	H	L
9	L	L	L	L	H	L	L	H	H	H	L	L
10	L	L	L	L	H	L	H	L	H	H	L	L
11	L	L	L	L	H	L	H	H	H	H	L	L
12	L	L	L	L	H	H	L	L	H	H	L	L
13	L	L	L	L	H	H	L	H	L	H	H	H
14	L	L	L	L	H	H	H	L	H	H	H	L
15	L	L	L	L	H	H	H	H	H	H	H	H
16	L	L	L	H	L	L	L	L	H	H	H	L
17	L	L	L	H	L	L	L	H	H	H	H	H
18	L	L	L	H	L	L	H	L	H	H	H	L
19	L	L	L	H	L	L	H	H	H	H	H	L
20	L	L	L	H	L	H	L	L	H	H	L	H
21	L	L	L	H	L	H	L	H	H	L	L	H
22	L	L	L	H	L	H	H	L	L	H	L	L
23	L	L	L	H	L	H	H	H	H	L	L	H
24	L	L	L	H	H	L	L	L	H	H	L	L
25	L	L	L	H	H	L	L	H	L	H	L	L
26	L	L	L	H	H	L	H	L	L	H	H	H
27	L	L	L	H	H	L	H	H	H	H	L	L
28	L	L	L	H	H	H	L	L	L	H	L	L
29	L	L	L	H	H	H	L	H	L	H	L	L
30	L	L	L	H	H	H	H	L	L	H	H	H
31	L	L	L	H	H	H	H	H	L	L	H	L

Word	Address								Data			
	A_7	A_6	A_5	A_4	A_3	A_2	A_1	A_0	B_3	B_2	B_1	B_0
32	L	L	H	L	L	L	L	L	L	L	H	L
33	L	L	H	L	L	L	L	H	L	H	L	L
34	L	L	H	L	L	L	H	L	L	H	H	H
35	L	L	H	L	L	L	H	H	L	H	H	H
36	L	L	H	L	L	H	L	L	H	L	H	H
37	L	L	H	L	L	H	L	H	H	H	H	H
38	L	L	H	L	L	H	H	L	L	L	H	H
39	L	L	H	L	L	H	H	H	L	H	H	H
40	L	L	H	L	H	L	L	L	H	H	H	H
41	L	L	H	L	H	L	L	H	L	H	H	H
42	L	L	H	L	H	L	H	L	L	H	H	L
43	L	L	H	L	H	L	H	H	L	H	H	H
44	L	L	H	L	H	H	L	L	L	H	L	L
45	L	L	H	L	H	H	L	H	L	H	H	H
46	L	L	H	L	H	H	H	L	L	H	L	L
47	L	L	H	L	H	H	H	H	L	H	H	H
48	L	L	H	H	L	L	L	L	L	H	H	H
49	L	L	H	H	L	L	L	H	H	H	L	H
50	L	L	H	H	L	L	H	L	L	H	H	H
51	L	L	H	H	L	L	H	H	L	H	L	L
52	L	L	H	H	L	H	L	L	H	H	L	L
53	L	L	H	H	L	H	L	H	L	H	L	L
54	L	L	H	H	L	H	H	L	L	L	L	H
55	L	L	H	H	L	H	H	H	H	H	L	L
56	L	L	H	H	H	L	L	L	L	H	L	L
57	L	L	H	H	H	L	L	H	L	H	H	H
58	L	L	H	H	H	L	H	L	L	H	H	L
59	L	L	H	H	H	L	H	H	L	H	L	L
60	L	L	H	H	H	H	L	L	L	H	H	L
61	L	L	H	H	H	H	L	H	L	H	L	L
62	L	L	H	H	H	H	H	L	L	H	H	L
63	L	L	H	H	H	H	H	H	L	H	L	L

FIGURE 3. Truth table - Typical programmed unit.

Truth table - Continued.

Word	Address								Data			
	A_7	A_6	A_5	A_4	A_3	A_2	A_1	A_0	B_3	B_2	B_1	B_0
64	L	H	L	L	L	L	L	L	L	H	L	L
65	L	H	L	L	L	L	L	H	L	H	L	L
66	L	H	L	L	L	L	H	L	L	H	L	L
67	L	H	L	L	L	L	H	H	L	H	L	L
68	L	H	L	L	L	H	L	L	L	H	L	L
69	L	H	L	L	L	H	L	H	L	H	L	L
70	L	H	L	L	L	H	H	L	L	H	L	L
71	L	H	L	L	L	H	H	H	L	H	H	H
72	L	H	L	L	H	L	L	L	L	H	L	L
73	L	H	L	L	H	L	L	H	L	H	H	H
74	L	H	L	L	H	L	H	L	L	H	L	L
75	L	H	L	L	H	L	H	H	L	H	H	H
76	L	H	L	L	H	H	L	L	L	H	L	H
77	L	H	L	L	H	H	L	H	L	H	H	H
78	L	H	L	L	H	H	H	L	H	L	L	L
79	L	H	L	L	H	H	H	H	L	L	L	L
80	L	H	L	H	L	L	L	L	L	H	L	H
81	L	H	L	H	L	L	L	H	L	L	L	L
82	L	H	L	H	L	L	H	L	H	L	H	L
83	L	H	L	H	L	L	H	H	L	L	H	L
84	L	H	L	H	L	H	L	L	L	H	L	H
85	L	H	L	H	L	H	L	H	L	L	H	L
86	L	H	L	H	L	H	H	L	H	H	H	H
87	L	H	L	H	L	H	H	H	L	H	L	H
88	L	H	L	H	H	L	L	L	H	L	L	L
89	L	H	L	H	H	L	L	H	L	L	L	L
90	L	H	L	H	H	L	H	L	L	H	H	L
91	L	H	L	H	H	L	H	H	H	L	L	L
92	L	H	L	H	H	H	L	L	L	L	L	L
93	L	H	L	H	H	H	L	H	H	H	L	H
94	L	H	L	H	H	H	H	L	L	H	H	H
95	L	H	L	H	H	H	H	H	L	H	H	L

Word	Address								Data			
	A_7	A_6	A_5	A_4	A_3	A_2	A_1	A_0	B_3	B_2	B_1	B_0
96	L	H	H	L	L	L	L	L	H	H	L	L
97	L	H	H	L	L	L	L	H	L	H	L	L
98	L	H	H	L	L	L	H	L	H	L	L	L
99	L	H	H	L	L	L	H	H	L	H	H	L
100	L	H	H	L	L	H	L	L	L	H	L	L
101	L	H	H	L	L	H	L	H	L	H	H	H
102	L	H	H	L	L	H	H	L	L	H	L	L
103	L	H	H	L	L	H	H	H	L	H	H	H
104	L	H	H	L	H	L	L	L	L	H	H	H
105	L	H	H	L	H	L	L	H	L	H	H	L
106	L	H	H	L	H	L	H	L	L	H	H	L
107	L	H	H	L	H	L	H	H	H	H	H	H
108	L	H	H	L	H	H	L	L	L	H	H	L
109	L	H	H	L	H	H	L	H	L	H	L	L
110	L	H	H	L	H	H	H	L	L	H	L	L
111	L	H	H	L	H	H	H	H	L	H	L	L
112	L	H	H	H	L	L	L	L	L	H	L	L
113	L	H	H	H	L	L	L	H	L	H	L	L
114	L	H	H	H	L	L	H	L	L	H	L	L
115	L	H	H	H	L	L	H	H	L	H	H	H
116	L	H	H	H	L	H	L	L	L	H	L	L
117	L	H	H	H	L	H	L	H	H	H	H	L
118	L	H	H	H	L	H	H	L	H	L	L	L
119	L	H	H	H	L	H	H	H	H	L	L	L
120	L	H	H	H	H	L	L	L	H	H	L	H
121	L	H	H	H	H	L	L	H	H	H	L	H
122	L	H	H	H	H	L	H	L	H	L	H	L
123	L	H	H	H	H	L	H	H	L	L	H	L
124	L	H	H	H	H	H	L	L	H	L	L	L
125	L	H	H	H	H	H	L	H	H	H	H	H
126	L	H	H	H	H	H	H	L	H	L	H	L
127	L	H	H	H	H	H	H	H	L	H	L	L

FIGURE 3. Truth table - typical programmed unit - Continued.

Truth table - Continued.

Word	Address								Data				Word	Address								Data			
	A_7	A_6	A_5	A_4	A_3	A_2	A_1	A_0	B_3	B_2	B_1	B_0		A_7	A_6	A_5	A_4	A_3	A_2	A_1	A_0	B_3	B_2	B_1	B_0
128	H	L	L	L	L	L	L	L	L	L	H	L	160	H	L	H	L	L	L	L	L	L	H	H	H
129	H	L	L	L	L	L	L	H	H	L	H	L	161	H	L	H	L	L	L	L	H	H	H	H	L
130	H	L	L	L	L	L	H	L	H	L	L	L	162	H	L	H	L	L	L	H	L	H	H	H	L
131	H	L	L	L	L	L	H	H	H	L	H	L	163	H	L	H	L	L	L	H	H	L	L	L	L
132	H	L	L	L	L	H	L	L	H	L	H	L	164	H	L	H	L	L	H	L	L	L	H	L	L
133	H	L	L	L	L	H	L	H	H	H	H	H	165	H	L	H	L	L	H	L	H	H	H	H	H
134	H	L	L	L	L	H	H	L	L	L	L	H	166	H	L	H	L	L	H	H	L	H	H	L	H
135	H	L	L	L	L	H	H	H	L	H	L	L	167	H	L	H	L	L	H	H	H	L	H	H	H
136	H	L	L	L	H	L	L	L	H	L	L	L	168	H	L	H	L	H	L	L	L	H	L	L	L
137	H	L	L	L	H	L	L	H	L	H	L	L	169	H	L	H	L	H	L	L	H	L	L	L	L
138	H	L	L	L	H	L	H	L	H	L	L	L	170	H	L	H	L	H	L	H	L	H	L	H	L
139	H	L	L	L	H	L	H	H	L	H	L	L	171	H	L	H	L	H	L	H	H	L	L	H	L
140	H	L	L	L	H	H	L	L	L	L	L	L	172	H	L	H	L	H	H	L	L	H	H	L	H
141	H	L	L	L	H	H	L	H	H	L	L	L	173	H	L	H	L	H	H	L	H	L	H	H	L
142	H	L	L	L	H	H	H	L	H	H	H	H	174	H	L	H	L	H	H	H	L	L	H	L	L
143	H	L	L	L	H	H	H	H	L	H	L	L	175	H	L	H	L	H	H	H	H	H	H	L	H
144	H	L	L	H	L	L	L	L	H	L	L	L	176	H	L	H	H	L	L	L	L	L	H	H	H
145	H	L	L	H	L	L	L	H	H	L	L	L	177	H	L	H	H	L	L	L	H	L	H	L	H
146	H	L	L	H	L	L	H	L	L	H	L	L	178	H	L	H	H	L	L	H	L	L	H	H	H
147	H	L	L	H	L	L	H	H	H	L	L	L	179	H	L	H	H	L	L	H	H	L	H	L	L
148	H	L	L	H	L	H	L	L	L	H	L	L	180	H	L	H	H	L	H	L	L	L	H	H	L
149	H	L	L	H	L	H	L	H	H	L	L	L	181	H	L	H	H	L	H	L	H	H	H	H	H
150	H	L	L	H	L	H	H	L	H	L	L	L	182	H	L	H	H	L	H	H	L	L	H	L	L
151	H	L	L	H	L	H	H	H	L	H	L	L	183	H	L	H	H	L	H	H	H	L	H	H	L
152	H	L	L	H	H	L	L	L	H	L	L	L	184	H	L	H	H	H	L	L	L	H	H	L	H
153	H	L	L	H	H	L	L	H	L	H	L	L	185	H	L	H	H	H	L	L	H	L	H	L	L
154	H	L	L	H	H	L	H	L	L	L	L	L	186	H	L	H	H	H	L	H	L	L	H	L	L
155	H	L	L	H	H	L	H	H	L	H	H	H	187	H	L	H	H	H	L	H	H	L	H	H	L
156	H	L	L	H	H	H	L	L	L	H	H	H	188	H	L	H	H	H	H	L	L	L	H	L	L
157	H	L	L	H	H	H	L	H	H	H	H	L	189	H	L	H	H	H	H	L	H	L	H	H	H
158	H	L	L	H	H	H	H	L	L	H	H	H	190	H	L	H	H	H	H	H	L	H	H	H	H
159	H	L	L	H	H	H	H	H	H	H	H	L	191	H	L	H	H	H	H	H	H	L	H	L	H

FIGURE 3. Truth table - typical programmed unit - Continued.

Truth table - Continued.

Word	Address								Data			
	A_7	A_6	A_5	A_4	A_3	A_2	A_1	A_0	B_3	B_2	B_1	B_0
192	H	H	L	L	L	L	L	L	H	H	H	H
193	H	H	L	L	L	L	L	H	L	H	L	L
194	H	H	L	L	L	L	H	L	L	H	L	H
195	H	H	L	L	L	L	H	H	H	H	H	H
196	H	H	L	L	L	H	L	L	L	H	L	H
197	H	H	L	L	L	H	L	H	L	H	L	L
198	H	H	L	L	L	H	H	L	L	H	L	H
199	H	H	L	L	L	H	H	H	H	H	H	H
200	H	H	L	L	H	L	L	L	L	H	L	L
201	H	H	L	L	H	L	L	H	L	H	H	H
202	H	H	L	L	H	L	H	L	L	H	L	L
203	H	H	L	L	H	L	H	H	L	H	H	L
204	H	H	L	L	H	H	L	L	H	H	H	H
205	H	H	L	L	H	H	L	H	L	H	L	L
206	H	H	L	L	H	H	H	L	L	H	L	L
207	H	H	L	L	H	H	H	H	L	L	H	H
208	H	H	L	H	L	L	L	L	H	H	H	H
209	H	H	L	H	L	L	L	H	L	H	L	H
210	H	H	L	H	L	L	H	L	H	H	H	H
211	H	H	L	H	L	L	H	H	H	H	H	H
212	H	H	L	H	L	H	L	L	H	H	L	H
213	H	H	L	H	L	H	L	H	L	H	L	L
214	H	H	L	H	L	H	H	L	L	L	H	H
215	H	H	L	H	L	H	H	H	L	H	H	H
216	H	H	L	H	H	L	L	L	L	L	H	H
217	H	H	L	H	H	L	L	H	L	H	L	L
218	H	H	L	H	H	L	H	L	L	L	L	L
219	H	H	L	H	H	L	H	H	L	L	H	H
220	H	H	L	H	H	H	L	L	L	H	L	L
221	H	H	L	H	H	H	L	H	L	H	H	L
222	H	H	L	H	H	H	H	L	L	H	H	L
223	H	H	L	H	H	H	H	H	H	H	L	L
224	H	H	H	L	L	L	L	L	L	L	H	H
225	H	H	H	L	L	L	L	H	H	H	H	H
226	H	H	H	L	L	L	H	L	L	H	H	H
227	H	H	H	L	L	L	H	H	L	L	H	H
228	H	H	H	L	L	H	L	L	H	H	H	H
229	H	H	H	L	L	H	L	H	L	L	L	L
230	H	H	H	L	L	H	H	L	L	L	H	H
231	H	H	H	L	L	H	H	H	H	H	H	H
232	H	H	H	L	H	L	L	L	L	H	H	L
233	H	H	H	L	H	L	L	H	L	H	H	L
234	H	H	H	L	H	L	H	L	L	L	H	H
235	H	H	H	L	H	L	H	H	H	L	L	L
236	H	H	H	L	H	H	L	L	H	L	H	L
237	H	H	H	L	H	H	L	H	H	H	L	L
238	H	H	H	L	H	H	H	L	L	L	H	H
239	H	H	H	L	H	H	H	H	L	L	H	L
240	H	H	H	H	L	L	L	L	H	H	L	L
241	H	H	H	H	L	L	L	H	L	H	H	H
242	H	H	H	H	L	L	H	L	L	H	L	L
243	H	H	H	H	L	L	H	H	H	H	L	H
244	H	H	H	H	L	H	L	L	H	H	H	H
245	H	H	H	H	L	H	L	H	H	H	L	H
246	H	H	H	H	L	H	H	L	H	H	H	H
247	H	H	H	H	L	H	H	H	H	H	L	H
248	H	H	H	H	H	L	L	L	H	H	H	H
249	H	H	H	H	H	L	L	H	L	L	L	H
250	H	H	H	H	H	L	H	L	H	H	H	H
251	H	H	H	H	H	L	H	H	L	H	L	L
252	H	H	H	H	H	H	L	L	L	L	L	H
253	H	H	H	H	H	H	L	H	H	H	L	H
254	H	H	H	H	H	H	H	L	H	H	H	H
255	H	H	H	H	H	H	H	H	H	H	H	H

FIGURE 3. Truth table - typical programmed unit - Continued.

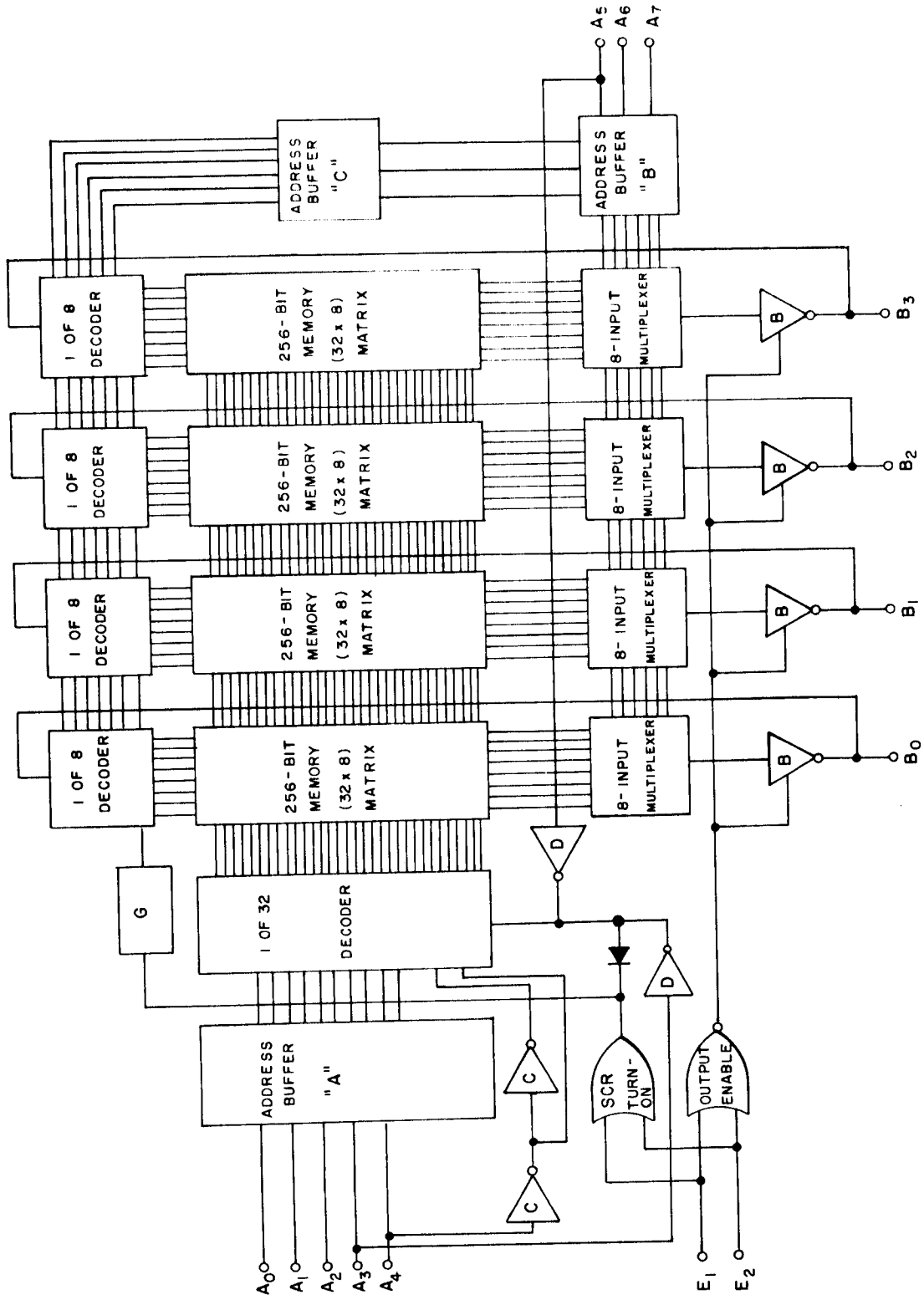

FIGURE 4. Logic diagram and schematic circuit.

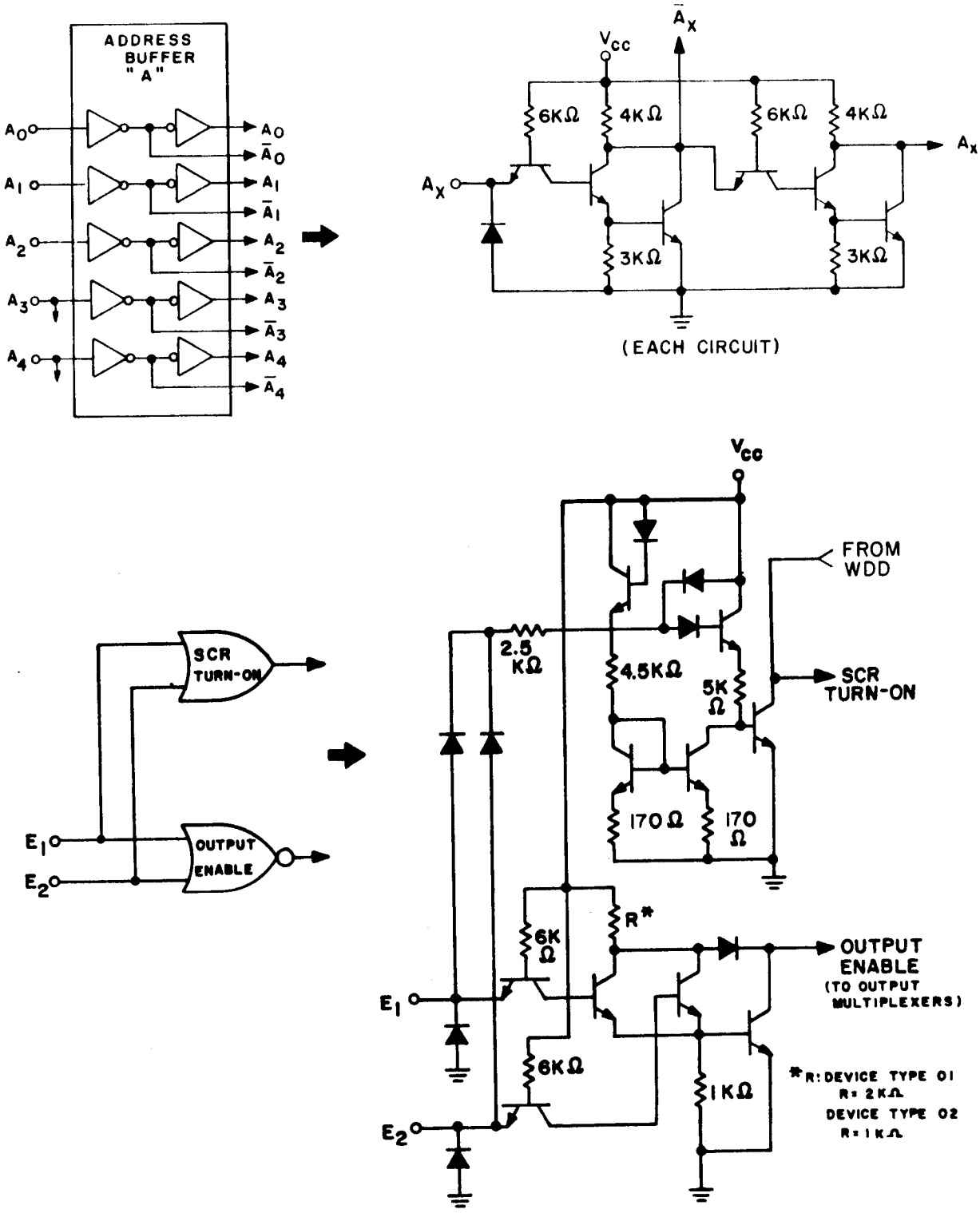

FIGURE 4. Logic diagram and schematic circuit - Continued.

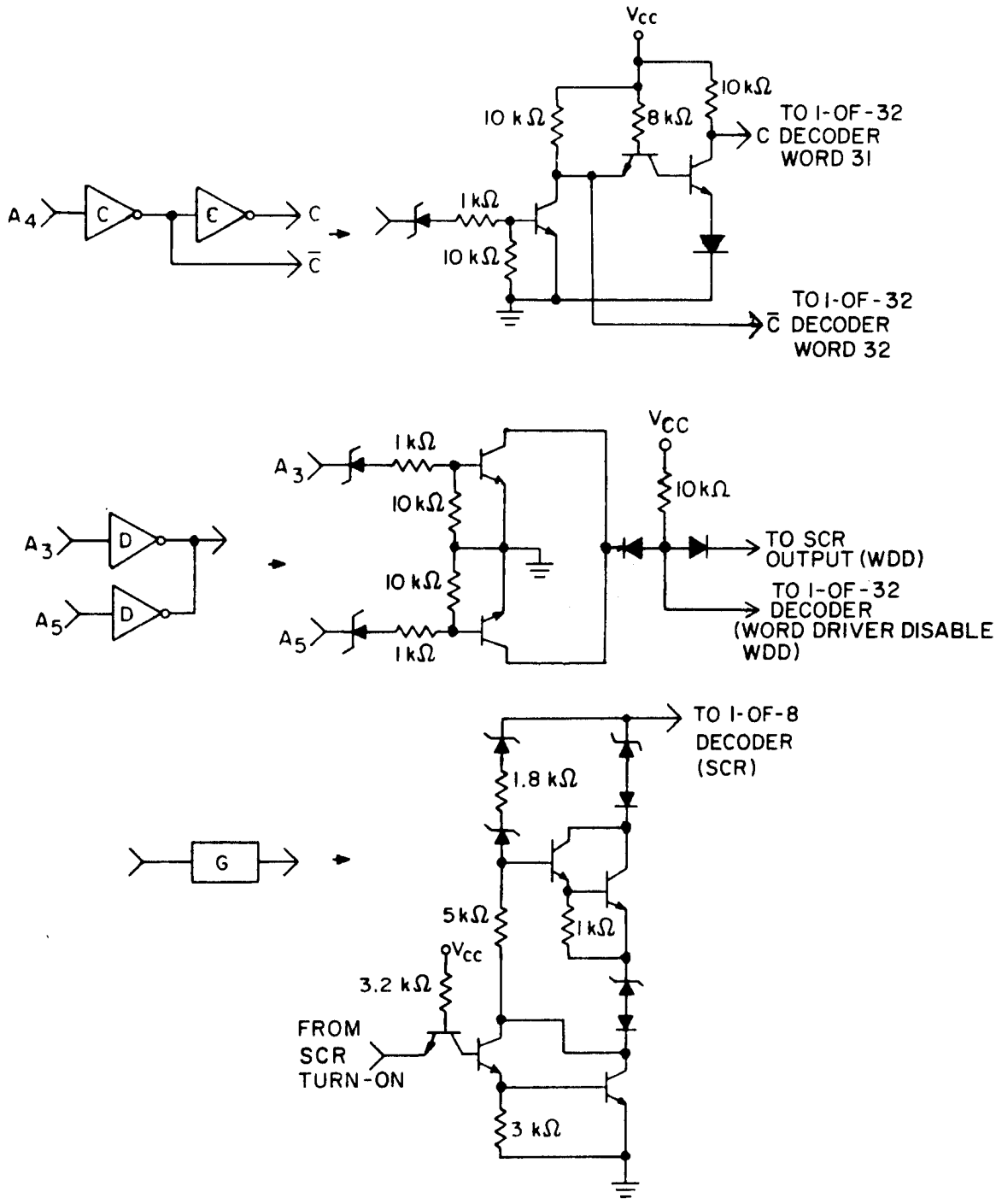

FIGURE 4. Logic diagram and schematic circuit - Continued.

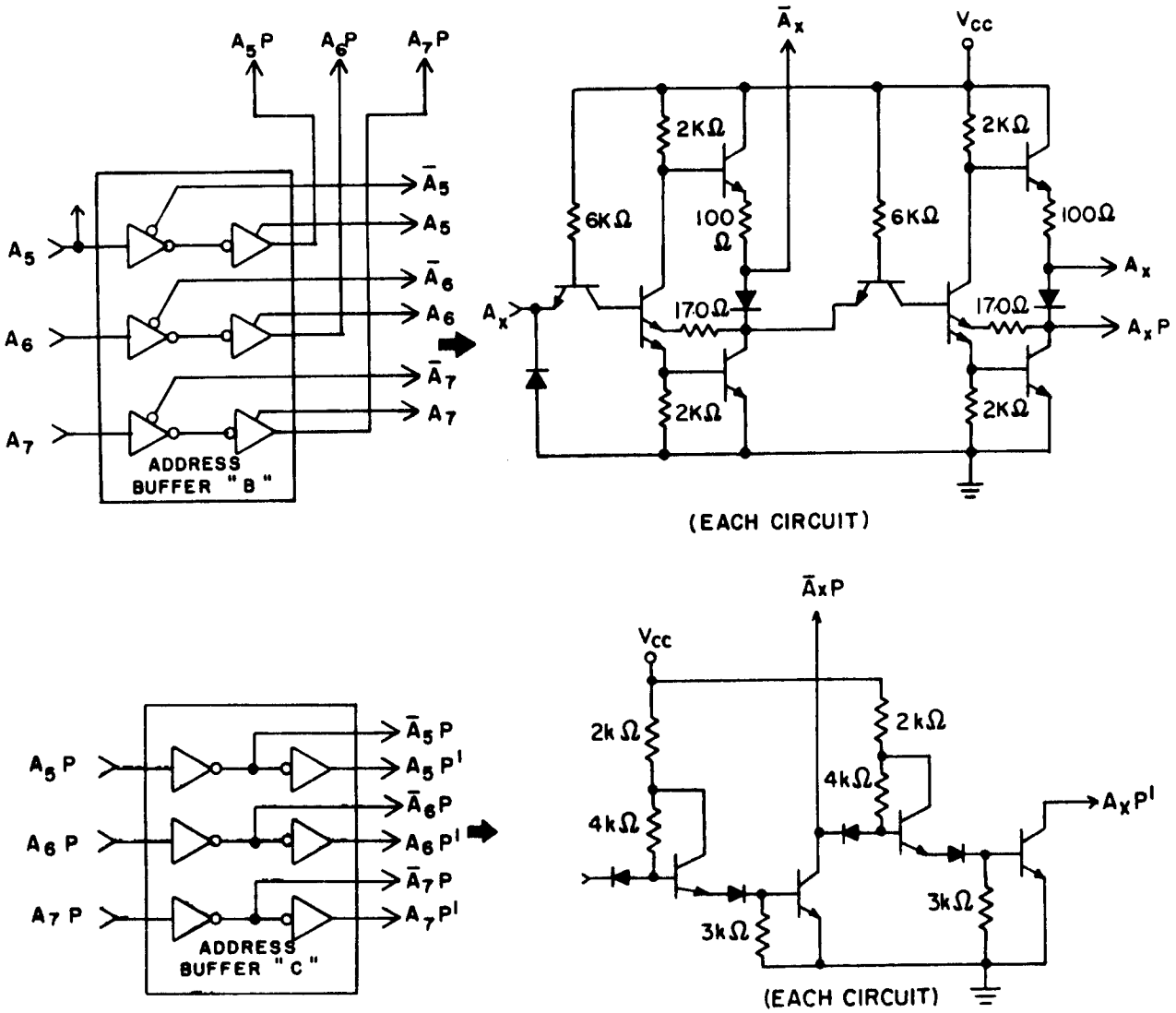

FIGURE 4. Logic diagram and schematic circuit - Continued.

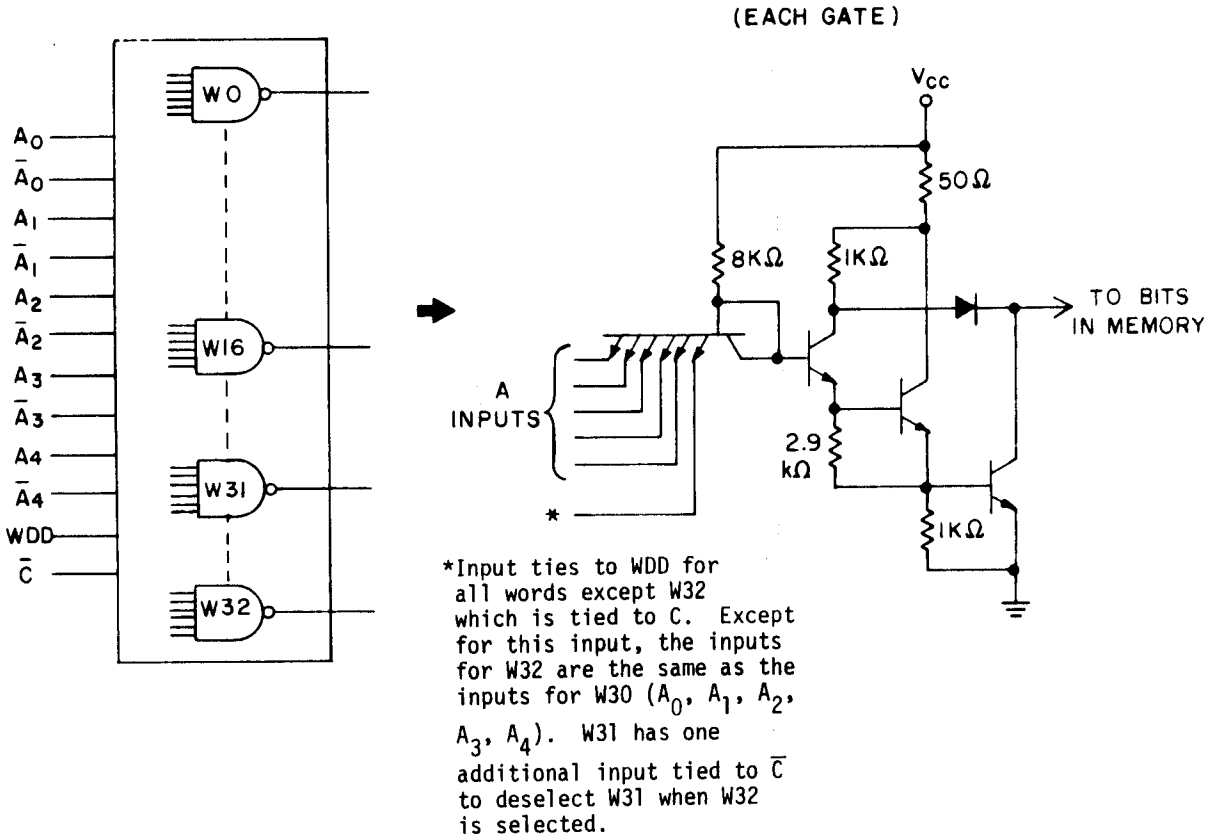

*Input ties to WDD for all words except W32 which is tied to C. Except for this input, the inputs for W32 are the same as the inputs for W30 (A_0, A_1, A_2, A_3, A_4). W31 has one additional input tied to $\overline{C}$ to deselect W31 when W32 is selected.

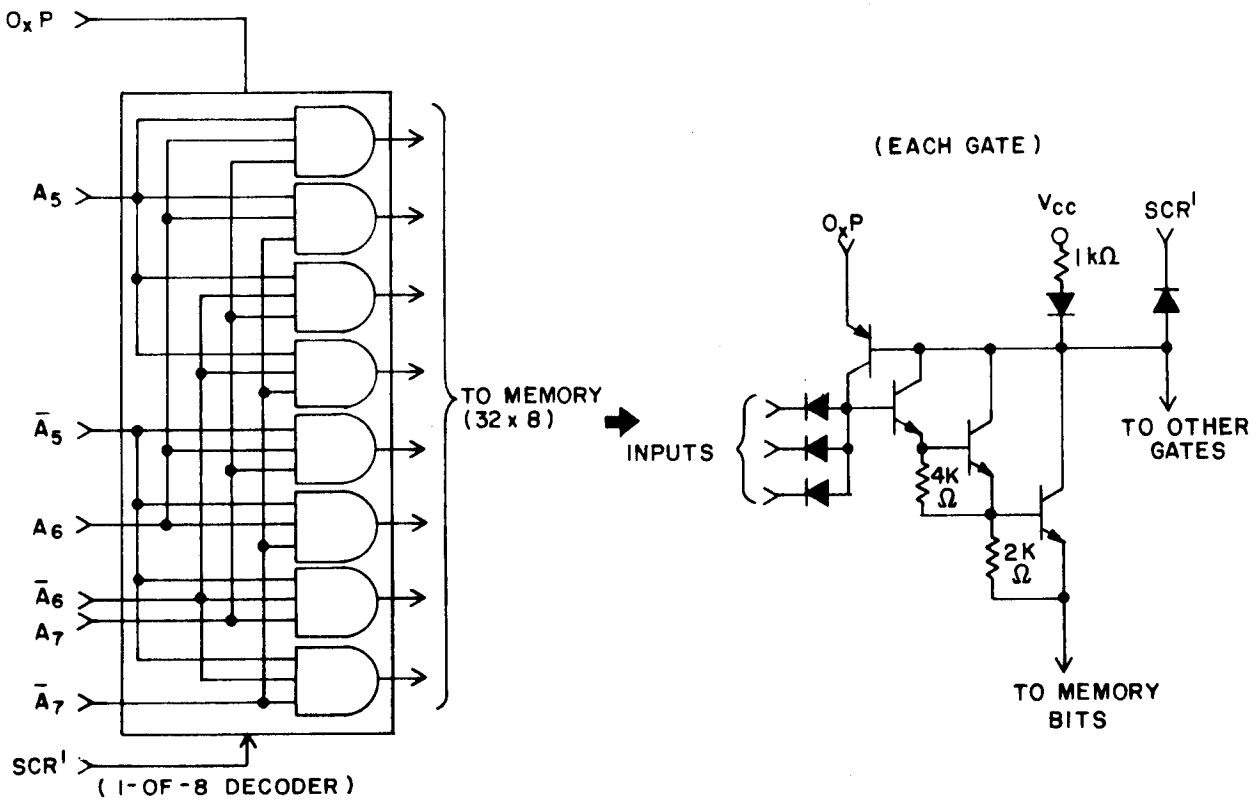

FIGURE 4. Logic diagram and schematic circuit - Continued.

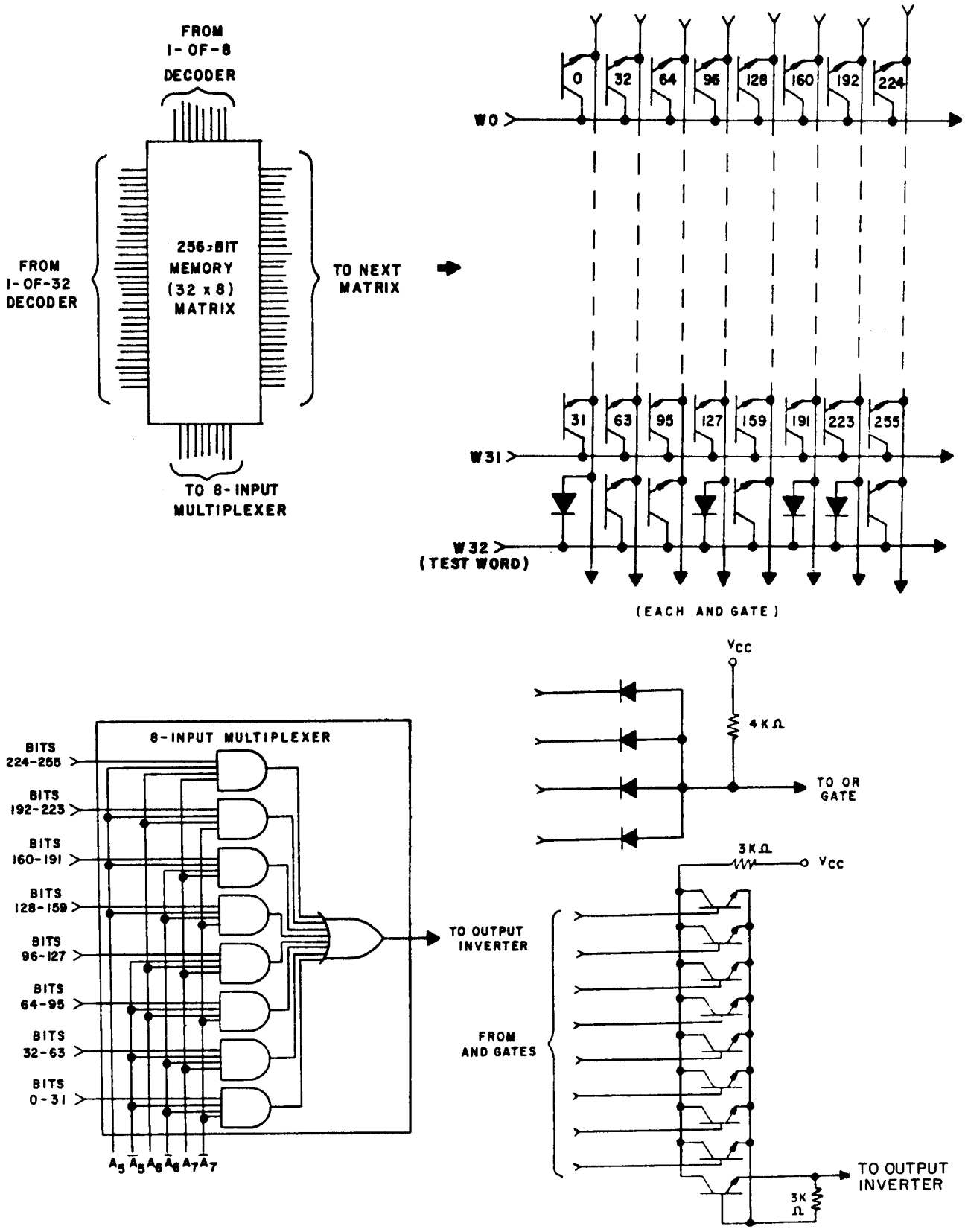

FIGURE 4. Logic diagram and schematic circuit - Continued.

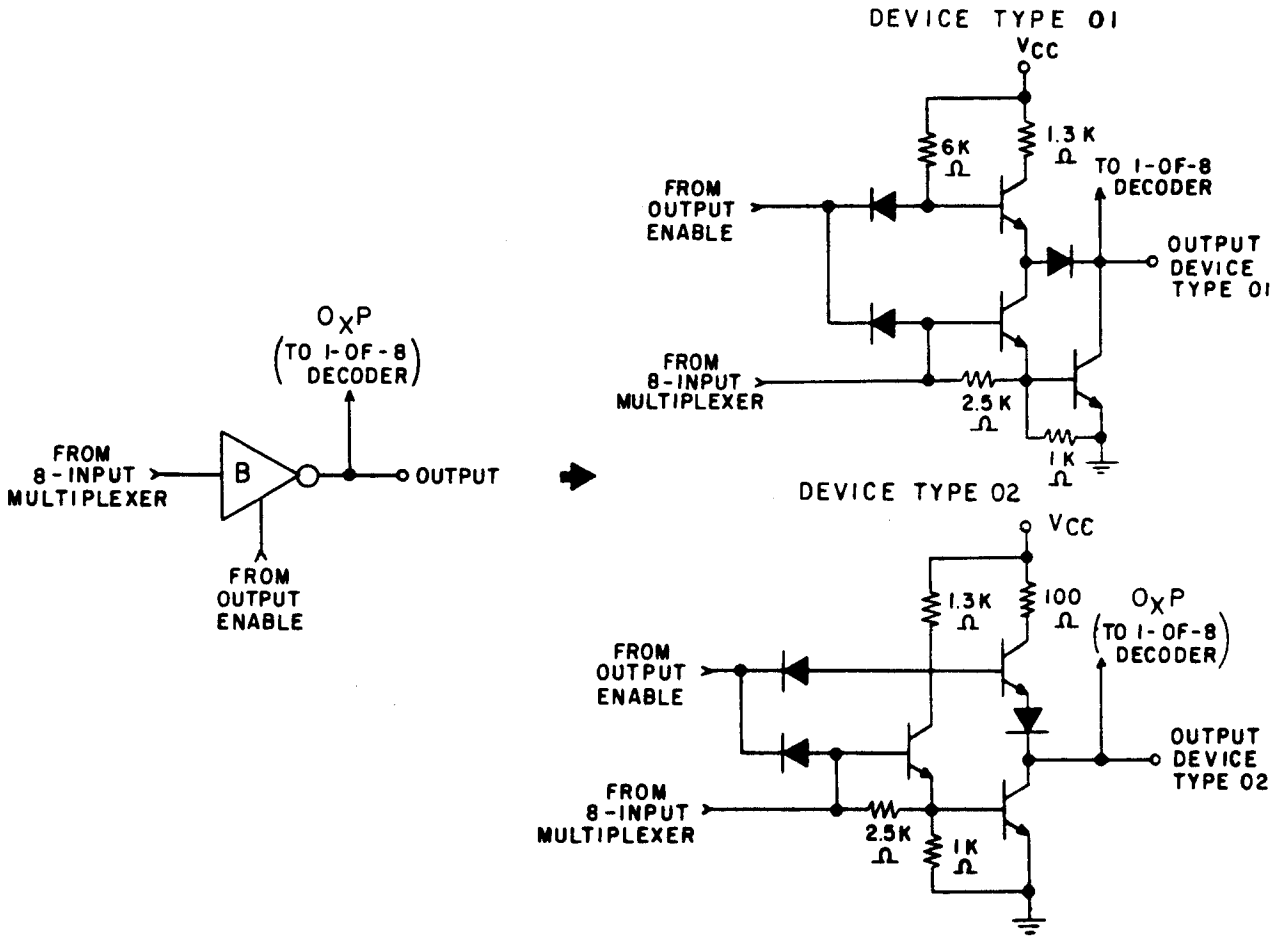

FIGURE 4. Logic diagram and schematic circuit - Continued.

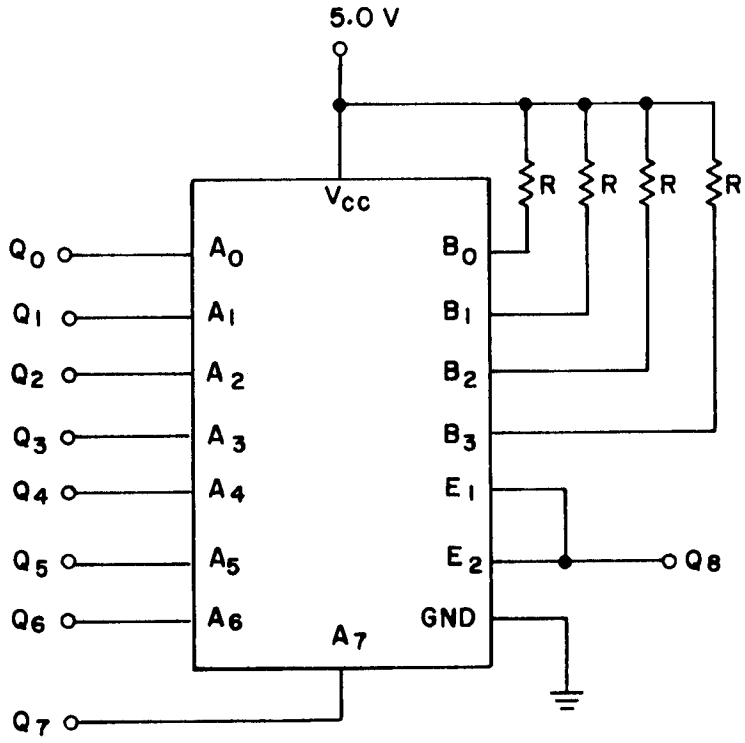

NOTES:
1. R = 300Ω ±5%. All outputs shall have separate identical loads.
2. All pulse generators have the following characteristics: $V_{IH} \geq 3.0$ volts, $V_{IL} \leq 0.4$ volts, 50% duty cycle and frequencies as specified in note 3.
3. Input frequencies are as follows:

Input	Frequency
Q_0	f_0 = 100 kHz min.
Q_1	$f_1 = 1/2\ f_0$
Q_2	$f_2 = 1/2\ f_1$
Q_3	$f_3 = 1/2\ f_2$
Q_4	$f_4 = 1/2\ f_3$
Q_5	$f_5 = 1/2\ f_4$
Q_6	$f_6 = 1/2\ f_5$
Q_7	$f_7 = 1/2\ f_6$
Q_8	$f_8 = 1/2\ f_7$

FIGURE 5. Burn-in and steady state life test circuit.

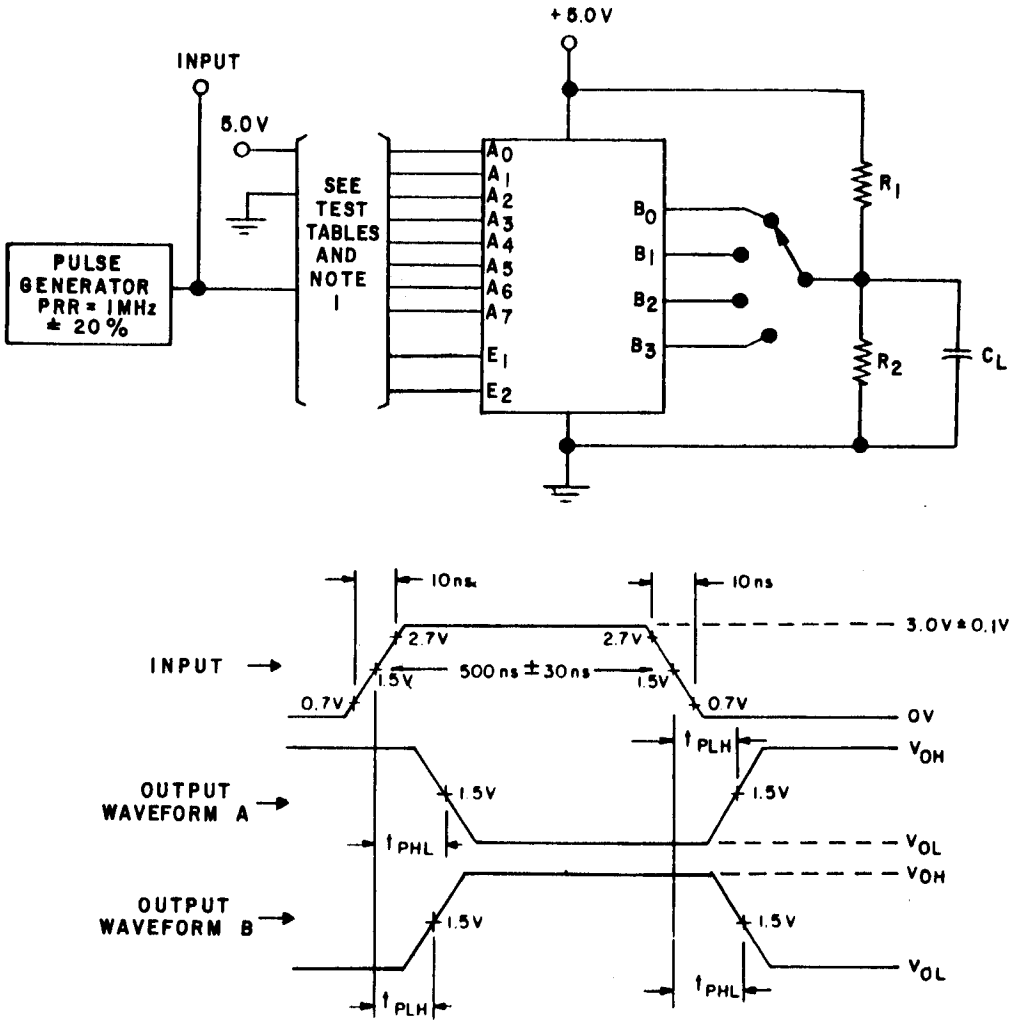

NOTES:

1. Test table for devices programmed in accordance with an altered item drawing may be replaced by the equivalent tests which apply to the specific program configuration for the resulting read-only memory.
2. C_L = 30 pF minimum, including jig and probe capacitance; R_1 = 300Ω ±5% and R_2 = 600Ω ±5%.

FIGURE 6. Switching time test circuit.

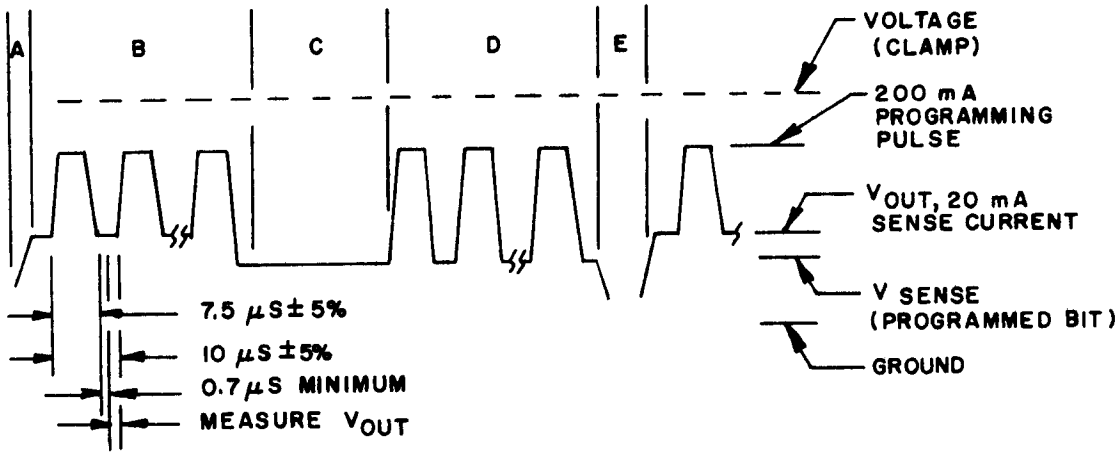

A. Sense pulse rise time.
B. Pulse train (program at 200 mA and sense at 20 mA).
C. Two successive sense readings where $V_{out} < V_{sense}$.
D. Four (4) additional program pulses.
E. Sense current interrupted during address change.

FIGURE 7. Typical voltage waveform during programming.

TABLE III. Group A inspection for device types 01 and 02.
Terminal conditions (see note (1))

Subgroup	Symbol	MIL-STD-883 method	Case E, F	1	2	3	4	5	6	7	8	9	10	11	12	13	14	15	16	Meas. terminal	Test limits Min	Test limits Max	Test limits Unit
			Test No.	A_6	A_5	A_4	A_3	A_0	A_1	A_2	GND	B_3	B_2	B_1	B_0	E_1	E_2	A_7	V_{CC}				
1 (2) T_C = 25°C	V_{OH}	3006	1	0.8 V	0.8 V	8.3 V	2.0 V	2.0 V	2.0 V	2.0 V	GND				(3)	0.8 V	0.8 V	0.8 V	4.5 V	B_0	2.4		V
			2										(3)	(3)						B_1			
			3									(3)								B_2			
			4																	B_3			
	V_{OL}	3007	5	2.0 V	2.0 V	8.3 V	2.0 V	2.0 V	2.0 V	2.0 V					16 mA	0.4 V	0.4 V	2.0 V		B_0		0.45	V
			6										16 mA	16 mA						B_1			
			7									16 mA								B_2			
			8																	B_3			
	V_{IC}		9					-10 mA												A_0		-1.5	V
			10						-10 mA											A_1			
			11							-10 mA										A_2			
			12				-10 mA													A_3			
			13			-10 mA														A_4			
			14		-10 mA															A_5			
			15	-10 mA														-10 mA		A_6			
			16													-10 mA				A_7			
			17														-10 mA			E_1			
			18																	E_2			
	I_{CEX1}		19	0.8 V	0.8 V	2.0 V	2.0 V	2.0 V	2.0 V	8.0 V					5.5 V	0.4 V	0.4 V	0.8 V	5.5 V	B_0		100	μA
			20										5.5 V	5.5 V						B_1			
			21									5.5 V								B_2			
			22																	B_3			
	I_{CEX2}		23												5.5 V	2.4 V	2.4 V			B_0		100	μA
			24										5.5 V	5.5 V						B_1			
			25									5.5 V								B_2			
			26																	B_3			
	I_{CEX3}		27												0.4 V	2.4 V	2.4 V			B_0		-40	μA
			28										0.4 V	0.4 V						B_1			
			29									0.4 V								B_2			
			30																	B_3			
	I_{IH1}	3010	31					2.4 V												A_0		100	μA
			32						2.4 V											A_1			
			33							2.4 V										A_2			
			34				2.4 V													A_3			
			35			2.4 V														A_4			
			36		2.4 V															A_5			

See notes at the end of this table.

TABLE III. Group A inspection for device types 01 and 02. - Continued

Subgroup	Symbol	MIL-STD-883 method	Case E, F	1	2	3	4	5	6	7	8	9	10	11	12	13	14	15	16	Meas. terminal	Test limits Min	Test limits Max	Test limits Unit
			Test No.	Terminal conditions (see note (1))																			
				A_6	A_5	A_4	A_3	A_0	A_1	A_2	GND	B_3	B_2	B_1	B_0	E_1	E_2	A_7	V_{CC}				
1 (2) T_C = 25°C	I_{IH1}	3010	37	2.4 V							GND							2.4 V	5.5 V	A_6		100	µA
			38																	A_7			
			39													2.4 V				E_1			
			40														2.4 V			E_2			
	I_{IH2}	3010	41					5.5 V												A_0		100	µA
			42						5.5 V											A_1			
			43							5.5 V										A_2			
			44				5.5 V													A_3			
			45			5.5 V														A_4			
			46		5.5 V															A_5			
			47	5.5 V														5.5 V		A_6			
			48																	A_7			
			49													5.5 V				E_1			
			50														5.5 V			E_2			
	I_{IL}	3009	51					0.4 V												A_0	-0.2	-1.0	mA
			52						0.4 V											A_1			
			53							0.4 V										A_2			
			54				0.4 V													A_3			
			55			0.4 V														A_4			
			56		0.4 V															A_5			
			57	0.4 V														0.4 V		A_6			
			58																	A_7			
			59													0.4 V				E_1			
			60														0.4 V			E_2			
	I_{OS}	3011	61	GND	GND	8.3 V	5.0 V	5.0 V	5.0 V	5.0 V					B_0	GND	GND	GND		B_0	(4)	(4)	mA
			62											B_1						B_1			
			63										B_2							B_2			
			64									B_3								B_3			
	I_{CC}	3005	65			GND	GND	GND	GND	GND										V_{CC}		130	mA

2 (2)	Same tests, terminal conditions, and limits as subgroup 1, except T_C = 125°C and V_{IC} tests are omitted.
3 (2)	Same tests, terminal conditions, and limits as subgroup 1, except T_C = -55°C and V_{IC} tests are omitted.
7	Functional tests at T_C = 25°C - See note (5).
8	Functional tests at T_C = 125°C and T_C = -55°C - See note (5).

See notes at the end of this table.

TABLE III. Group A inspection for device types 01 and 02. - Continued

Terminal conditions (see note (1))

Subgroup	Symbol	MIL-STD-883 method	Case E, F	1	2	3	4	5	6	7	8	9	10	11	12	13	14	15	16	Meas. terminal	Test limits Min	Test limits Max	Test limits Unit
			Test No.	A_6	A_5	A_4	A_3	A_0	A_1	A_2	GND	B_3	B_2	B_1	B_0	E_1	E_2	A_7	V_{CC}				
9 (2) T_C = 25°C	t_{PHL1} t_{PLH1}	3003 (Fig 6)	66 & 67	GND	IN	8.3 V	5.0 V	5.0 V	5.0 V	5.0 V	GND			OUT-A	OUT-A	GND	GND	GND	5.0 V	A_5 - B_0	20	60	ns
			68 & 69										OUT-A							A_5 - B_1			
			70 & 71									OUT-A								A_5 - B_2			
			72 & 73												OUT-A					A_5 - B_3			
			74 & 75	IN	GND									OUT-A						A_6 - B_0			
			76 & 77										OUT-A							A_6 - B_1			
			78 & 79									OUT-A								A_6 - B_2			
			80 & 81												OUT-A			IN		A_6 - B_3			
			82 & 83	GND										OUT-A						A_7 - B_0			
			84 & 85										OUT-A							A_7 - B_1			
			86 & 87												OUT-A					A_7 - B_2			
			88 & 89									OUT-A						GND		A_7 - B_3			
			90 & 91					IN							OUT-B					A_0 - B_0			
			92 & 93											OUT-B						A_0 - B_1			
			94 & 95										OUT-B							A_0 - B_2			
			96 & 97									OUT-B								A_0 - B_3			
			98 & 99	5.0 V	5.0 V			5.0 V	IN						OUT-B					A_1 - B_0			
			100 & 101											OUT-B						A_1 - B_1			
			102 & 103										OUT-B							A_1 - B_2			
			104 & 105									OUT-B								A_1 - B_3			
			106 & 107	GND			IN		5.0 V						OUT-B			5.0 V		A_3 - B_0			
			108 & 109											OUT-B						A_3 - B_1			
			110 & 111										OUT-B							A_3 - B_2			
			112 & 113									OUT-B								A_3 - B_3			
			114 & 115	5.0 V	GND		5.0 V			IN					OUT-B					A_2 - B_0			
			116 & 117											OUT-B						A_2 - B_1			
			118 & 119										OUT-B							A_2 - B_2			
			120 & 121									OUT-B								A_2 - B_3			
	t_{PHL2} t_{PLH2}		122 & 123	GND	GND	GND	GND	GND	GND	GND					OUT-B	IN	GND	GND		E_1 - B_0	10	30	ns
			124 & 125											OUT-B						E_1 - B_1			
			126 & 127										OUT-B							E_1 - B_2			
			128 & 129									OUT-B								E_1 - B_3			
			130 & 131												OUT-B	GND	IN			E_2 - B_0			
			132 & 133											OUT-B						E_2 - B_1			
			134 & 135										OUT-B							E_2 - B_2			
			136 & 137									OUT-B								E_2 - B_3			

See notes at the end of this table.

TABLE III. Group A inspection for device types 01 and 02. - Continued

Terminal conditions (see note (1))

Subgroup	Symbol	MIL-STD-883 method	Case E, F	1	2	3	4	5	6	7	8	9	10	11	12	13	14	15	16	Meas. terminal	Test limits Min	Max	Unit
			Test No.	A_6	A_5	A_4	A_3	A_0	A_1	A_2	GND	B_3	B_2	B_1	B_0	E_1	E_2	A_7	V_{CC}				
10 (2) T_C = 125°C	t_{PHL1} t_{PLH1}	3003 (Fig 6)	138 & 139	GND	IN	8.3 V	5.0 V	5.0 V	5.0 V	5.0 V	GND				OUT-A	GND	GND	GND	5.0 V	A_5 - B_0	20	100	ns
			140 & 141											OUT-A						A_5 - B_1			
			142 & 143										OUT-A							A_5 - B_2			
			144 & 145									OUT-A								A_5 - B_3			
			146 & 147	IN	GND										OUT-A					A_6 - B_0			
			148 & 149											OUT-A						A_6 - B_1			
			150 & 151										OUT-A							A_6 - B_2			
			152 & 153									OUT-A								A_6 - B_3			
			154 & 155	GND											OUT-A			IN		A_7 - B_0			
			156 & 157											OUT-A						A_7 - B_1			
			158 & 159										OUT-A							A_7 - B_2			
			160 & 161									OUT-A								A_7 - B_3			
			162 & 163					IN										GND		A_0 - B_0			
			164 & 165																	A_0 - B_1			
			166 & 167																	A_0 - B_2			
			168 & 169																	A_0 - B_3			
			170 & 171	5.0 V	5.0 V			5.0 V	IN											A_1 - B_0			
			172 & 173																	A_1 - B_1			
			174 & 175																	A_1 - B_2			
			176 & 177																	A_1 - B_3			
			178 & 179	GND			IN		5.0 V									5.0 V		A_3 - B_0			
			180 & 181																	A_3 - B_1			
			182 & 183																	A_3 - B_2			
			184 & 185																	A_3 - B_3			
			186 & 187	5.0 V	GND		5.0 V			IN										A_2 - B_0			
			188 & 189																	A_2 - B_1			
			190 & 191																	A_2 - B_2			
			192 & 193																	A_2 - B_3			
	t_{PHL2} t_{PLH2}		194 & 195	GND		GND	GND	GND	GND	GND					OUT-B	IN		GND		E_1 - B_0	10	50	ns
			196 & 197											OUT-B						E_1 - B_1			
			198 & 199										OUT-B							E_1 - B_2			
			200 & 201									OUT-B								E_1 - B_3			
			202 & 203												OUT-B	GND	IN			E_2 - B_0			
			204 & 205											OUT-B						E_2 - B_1			
			206 & 207										OUT-B							E_2 - B_2			
			208 & 209									OUT-B								E_2 - B_3			

See notes at the end of this table.

TABLE III. Group A inspection for device types 01 and 02. - Continued

Subgroup	Symbol	MIL-STD-883 method	Case E, F	1	2	3	4	5	6	7	8	9	10	11	12	13	14	15	16	Meas. terminal	Test limits		
			Test No.	A_6	A_5	A_4	A_3	A_0	A_1	A_2	GND	B_3	B_2	B_1	B_0	E_1	E_2	A_7	V_{CC}		Min	Max	Unit
			Terminal conditions (see note (1))																				
11 (2)	Same tests, terminal conditions, and limits as subgroup 10 except T_C = -55 C.																						

NOTES:

(1) Input pins not designated may be tied to V_{CC} or GND or may be left open provided they do not influence the outcome of the measurement. Output pins not designated may be tied to the loads or may be left open provided they do not influence the outcome of the test.

(2) Unprogrammed device conditions.

(3) For device type 01, I_{OH} = -0.4 mA; for device type 02, I_{OH} = -1.0 mA.

(4) For device type 01, I_{OS} (min) = -1.0 mA and I_{OS} (max) = -6.0 mA; For device type 02, I_{OS} (min) = -15.0 mA and I_{OS} (max) = -60.0 mA.

(5) The functional test shall consist of all the words tested in sequence as specified in figure 7 or in the altered item drawing, as applicable (see table II and 3.2.2.2). Terminal conditions shall be as follows:

a. Inputs: H = 5.0 V, L = GND, V_{CC} = 5.0 V.

b. Outputs: Output voltages shall be either:

1. H = 2.4 volts minimum and L = 0.4 volts maximum when using a high speed checker double comparator, or

2. H $\geq$1.0 volts and L <1.0 volts when using a high speed checker single comparator.

3.9 Manufacturer eligibility. To be eligible to supply microcircuits to this specification, a manufacturer shall have manufacturer certification in accordance with MIL-M-38510 for at least one microcircuit line. Not necessarily the microcircuit line producing the device type described herein.

3.10 Certification. Certification in accordance with MIL-M-38510 is not required for this device.

4. QUALITY ASSURANCE PROVISIONS

4.1 Sampling and inspection. Sampling and inspection procedures shall be in accordance with MIL-M-38510 and method 5005 of MIL-STD-883, except as modified herein.

4.2 Screening. Screening shall be in accordance with method 5004 of MIL-STD-883, and shall be conducted on all devices prior to quality conformance inspection. The following additional criteria shall apply:

a. Burn-in test (method 1015 of MIL-STD-883).

(1) Test condition D, using the circuit shown on figure 5, or equivalent.

(2) T_A = 125°C minimum.

b. Interim and final electrical test parameters shall be as specified in table II, except interim electrical parameter tests prior to burn-in is optional at the discretion of the manufacturer.

c. The percent defective allowable (PDA) shall be as specified in MIL-M-38510.

d. All devices processed by the manufacturer to an altered item drawing shall be programmed prior to burn-in.

4.3 Qualification inspection. Qualification inspection is not required.

4.4 Quality conformance inspection. Quality conformance inspection shall be in accordance with MIL-M-38510. Inspections to be performed shall be those specified in method 5005 of MIL-STD-883 and herein for groups A, B, C, and D inspections (see 4.4.1 through 4.4.4). Generic test data (see 6.5) may be used to satisfy the requirements for groups C and D inspections. Quality conformance inspection shall be completed on the specific devices covered by this specification before they are shipped.

4.4.1 Group A inspection. Group A inspection shall be in accordance with table I of method 5005 of MIL-STD-883 and as follows:

a. Tests shall be as specified in table II herein.

b. Subgroups 4, 5, and 6 of table I of method 5005 of MIL-STD-883 shall be omitted.

c. For unprogrammed devices, a sample shall be selected to satisfy programmability requirements prior to performing subgroups 9, 10, and 11. 12 devices shall be submitted to programming (see 3.2.2.1). If more than 2 devices fail to program, the lot shall be rejected. At the manufacturers option, the sample may be increased to 24 total devices with no more than 4 total device failures allowable.

d. For unprogrammed devices, 10 devices from the programmability sample shall be submitted to the requirements of group A, subgroups 9, 10, and 11. If more than 2 total devices fail in all 3 subgroups, the lot shall be rejected. At the manufacturers option, the sample may be increased to 20 total devices with no more than 4 total device failures allowable.

4.4.2 Group B inspection. Group B inspection shall be in accordance with table II of method 5005 of MIL-STD-883.

4.4.3 Group C inspection. Group C inspection shall be in accordance with table III of method 5005 of MIL-STD-883 and as follows:

a. End-point electrical test parameters shall be as specified in table II herein.

b. Steady state life test (method 1005 of MIL-STD-883) conditions:

(1) Test condition D, using the circuit shown on figures 5 or 6, or equivalent.

(2) T_A = 125°C minimum.

(3) Test duration: 1,000 hours, except as permitted by appendix B of MIL-M-38510.

c. For quality conformance inspection, the programmability sample (see 4.4.1c) shall be included in the subgroup 1 tests.

4.4.4 Group D inspection. Group D inspection shall be in accordance with table IV of method 5005 of MIL-STD-883. End-point electrical test parameters shall be as specified in table II herein.

4.5 Methods of inspection. Methods of inspection shall be as specified in the appropriate tables and as follows:

4.5.1 Voltage and current. All voltages given are referenced to the microcircuit ground terminal. Currents given are conventional current and positive when flowing into the referenced terminal.

4.6 Programming. Using the test conditions of table IV, the following procedure shall be used for programming the device:

a. Select the desired word with the eight address inputs. Apply a low level input voltage to both enable inputs.

b. Apply a train of high current pulses to the outpt bit to be programmed to a high level logic using the procedure specified in figure 7 and table IV.

c. Terminate the pulse train when the sense voltage indicates the selected bit is in the high level logic state. If the device fails to program after 100 pulses, it shall be rejected as a failure.

d. Repeat steps b. and c. for all output bits in the selected word where a high logic level is desired.

e. Interrupt the sense current and change the address to the next desired word.

f. Repeat steps a. through f. until the entire memory is correctly programmed.

TABLE IV. Programming specifications.

Characteristic	Limit Min	Limit Max	Unit	Notes
1. Programming pulse:				
Amplitude	190	200	mA	Constant current.
Voltage (clamp)	27.5	28.0	V	Voltage limit of current source.
Ramp rate dv/dt		70	V/µs	
Pulse width	7.125	7.875	µs	15 V points, 150Ω load.
Duty cycle	70		%	10 µs cycle ±5%.
2. V_{CC}	5.0	5.25	V	
3. Sense current	19.0	21.0	mA	The sense current must be interrupted after each address change for 10 µs minimum.
Ramp rate		70	V/µs	
Voltage clamp	27.5	28.0	V	
4. Maximum sensed voltage for an output bit programmed to a high level logic	6.9	7.1	V	A bit is prgrammed when two successive sense readings 10 µs apart, with no intervening programming pulse, pass the limit. When this condition has been met, 4 additional program pulses are applied and the pulse train is then terminated.
5. Delay from trailing edge of program pulse before sensing output voltage	0.7		µs	
6. Number of programming pulses to program a given bit		100		

5. PACKAGING

5.1 Packaging requirements. The requirements for packaging shall be as specified in MIL-M-38510.

6. NOTES

6.1 Intended use. Microcircuits conforming to this specification are intended for logistic support of existing equipment.

6.2 Ordering data. The acquisition document should specify the following:

a. Complete part number (see 1.2).

b. Requirements for delivery of one copy of the quality conformance inspection data pertinent to the device inspection lot to be supplied with each shipment by the device manufacturer, if applicable.

c. Requirements for certificate of compliance, if applicable.

d. Requirements for notification of change of product or process to contracting activity, if applicable.

e. Requirements for failure analysis (including required test condition of method 5003), corrective action, and reporting of results, if applicable.

f. Requirements for product assurance options.

g. Requirements for special carriers, lead lengths, or lead forming, if applicable. These requirements shall not affect the part number. Unless otherwise specified, these requirements will not apply to direct purchase by or direct shipment to the Government.

h. Requirement for programming the device, including processing option. The device may be programmed pre- or post-burn-in, if applicable.

6.3 Abbreviations, symbols, and definitions. The abbreviations, symbols, and definitions used herein are defined in MIL-M-38510, MIL-STD-1331, and as follows:

GND - - - - - - - - - - - - Electrical ground (common terminal)

V_{IN} - - - - - - - - - - - - Voltage level at an input terminal

V_{IC} - - - - - - - - - - - - Input clamp voltage

I_{IN} - - - - - - - - - - - - Current flowing into an input terminal

T_C - - - - - - - - - - - - Case temperature

6.4 Logistic support. Lead materials and finishes (see 3.3), are interchangeable. Unless otherwise specified, microcircuits acquired for Government logistic support will be acquired to device class B (see 1.2.2) and lead material and finish C (see 3.3). Longer length leads and lead forming shall not affect the part number. It is intended that spare devices for logistic support to be acquired in the unprogrammed condition (see 3.7.1) and programmed by the maintenance activity, except where use quantities for devices with a specific program or pattern justify stocking of preprogrammed devices.

6.5 Generic test data. Generic test data may be used to satisfy the requirements of 4.4.3. Group C generic test data shall be on date codes no more than one year old and on a die in the same microcircuit group (see appendix E of MIL-M-38510) with the same material, design and process from the same plant as the die represented. Group D (see 4.4.4) generic data shall be on date codes no more than one year old and on the same package type (see terms, definitions, and symbols of MIL-M-38510) and from the same plant as the package represented. The vendor is required to retain generic data for a period of not less than 36 months from the date of shipment.

6.6 Substitutability. The cross-reference information below is presented for the convenience of users. Microcircuits covered by this specification will functionally replace the listed generic-industry type. Generic-industry microcircuit types may not have equivalent operational performance characteristics across military temperature ranges or reliability factors equivalent to MIL-M-38510 device types and may have slight physical variations in relation to case size. The presence of this information shall not be deemed as permitting substitution of generic-industry types for MIL-M-38510 types or as a waiver of any of the provisions of MIL-M-38510.

Military device type	Generic-industry type
01	IM 5603A
02	IM 5623

6.7 Ordering guidance. Since the qualification and certification requirements have been removed from the specification, orders may be placed immediately.

6.8 Changes from previous issue. Asterisks are not used in this revision to identify changes with respect to the previous issue due to the extensiveness of the changes.

Custodians:
Army - ER
Navy - EC
Air Force - 17
NASA - NA

Review activities:
Army - AR, MI
Navy - OS, SH
Air Force - 11, 19, 85, 99
DLA - ES

User activities:
Army - SM
Navy - AS, CG, MC

Agent:
DLA - ES

Preparing activity:
Air Force - 17

(Project 5962-0646-1)