INCH-POUND

MIL-M-38510/19A
7 June 2005
SUPERSEDING
MIL-M-38510/19(USAF)
14 February 1975

MILITARY SPECIFICATION

MICROCIRCUITS, DIGITAL, TTL, PARITY GENERATORS/CHECKERS, MONOLITHIC SILICON

Inactive for new design after 7 September 1995.

This specification is approved for use by all Departments and Agencies of the Department of Defense.

The requirements for acquiring the product herein shall consist of this specification sheet and MIL-PRF 38535

1. SCOPE

1.1 Scope. This specification covers the detail requirements for monolithic, silicon, TTL, parity generators/checkers. Two product assurance classes and a choice of case outlines and lead finishes are provided for each type and are reflected in the complete part number. For this product, the requirements of MIL-M-38510 have been superseded by MIL-PRF-38535, (see 6.4).

1.2 Part or Identifying Number (PIN). The PIN is in accordance with MIL-PRF-38535 and as specified herein.

1.2.1 Device types. The device types are as follows:

Device type	Circuit
01	8-bit odd/even parity generator/checker

1.2.2 Device class. The device class is the product assurance level as defined in MIL-PRF-38535.

1.2.3 Case outlines. The case outlines are as designated in MIL-STD-1835 and as follows:

Outline letter	Descriptive designator	Terminals	Package style
A	GDFP5-F14 or CDFP6-F14	14	Flat pack
B	GDFP4-F14	14	Flat pack
C	GDIP1-T14 or CDIP2-T14	14	Dual-in-line
D	GDFP1-F14 or CDFP2-F14	14	Flat pack

Comments, suggestions, or questions on this document should be addressed to: Commander, Defense Supply Center Columbus, ATTN: DSCC-VAS, P. O. Box 3990, Columbus, OH 43218-3990, or emailed to bipolar@dscc.dla.mil. Since contact information can change, you may want to verify the currency of this address information using the ASSIST Online database at http://assist.daps.dla.mil.

AMSC N/A FSC 5962

1.3 Absolute maximum ratings.

Supply voltage range	-0.5 V dc to +7.0 V dc
Input voltage range	-1.5 V dc at -12 mA to +5.5 V dc
Storage temperature range	-65°C to +150°C
Maximum power dissipation per gate, (P_D) 1/	270 mW dc
Lead temperature (soldering 10 seconds)	300°C
Thermal resistance, junction-to-case (θ_{JC})	(See MIL-STD-1835)
Junction temperature (T_J) 2/	175°C

1.4 Recommended operating conditions.

Supply voltage	4.5 V dc minimum to 5.5 V dc maximum
Minimum high level input voltage	2.0 V dc
Maximum low level input voltage	0.8 V dc
Normalized fanout (each output)	
Logical high	20 maximum
Logical low	10 maximum
Case operating temperature range (T_C)	-55°C to 125°C

2.0 APPLICABLE DOCUMENT

2.1 General. The documents listed in this section are specified in sections 3, 4, or 5 of this specification. This section does not include documents cited in other sections of this specification or recommended for additional information or as examples. While every effort has been made to ensure the completeness of this list, document users are cautioned that they must meet all specified requirements of documents cited in sections 3, 4, or 5 of this specification, whether or not they are listed.

2.2 Government documents.

2.2.1 Specifications and standards. The following specifications and standards form a part of this specification to the extent specified herein. Unless otherwise specified, the issues of these documents are those cited in the solicitation or contract.

DEPARTMENT OF DEFENSE SPECIFICATIONS

MIL-PRF-38535 - Integrated Circuits (Microcircuits) Manufacturing, General Specification for.

DEPARTMENT OF DEFENSE STANDARDS

MIL-STD-883 - Test Method Standard for Microelectronics.
MIL-STD-1835 - Interface Standard Electronic Component Case Outlines

(Copies of these documents are available online at http://assist.daps.dla.mil/quicksearch/ or http://assist.daps.dla.mil or from the Standardization Document Order Desk, 700 Robbins Avenue, Building 4D, Philadelphia, PA 19111-5094.)

2.3 Order of precedence. In the event of a conflict between the text of this specification and the references cited herein, the text of this document takes precedence. Nothing in this document, however, supersedes applicable laws and regulations unless a specific exemption has been obtained.

1/ Must withstand the added P_D due to short circuit condition (e.g. I_{OS}) at one output for 5 seconds duration.
2/ Maximum junction temperature should not be exceeded except in accordance with allowable short duration burn-in screening condition in accordance with MIL-PRF-38535.

3. REQUIREMENTS

3.1 Qualification. Microcircuits furnished under this specification shall be products that are manufactured by a manufacturer authorized by the qualifying activity for listing on the applicable qualified manufacturers list before contract award (see 4.3 and 6.3).

3.2 Item requirements. The individual item requirements shall be in accordance with MIL-PRF-38535 and as specified herein or as modified in the device manufacturer's Quality Management (QM) plan. The modification in the QM plan shall not affect the form, fit, or function as described herein.

3.3 Design, construction, and physical dimensions. The design, construction, and physical dimensions shall be as specified in MIL-PRF-38535 and herein.

3.3.1 Terminal connections. The terminal connections shall be as specified on figure 1.

3.3.2 Truth table. The truth table shall be as specified on figure 2.

3.3.3 Logic diagram. The logic diagram shall be as specified on figure 3.

3.3.4 Schematic circuit. The schematic circuit shall be maintained by the manufacturer and made available to the qualifying activity and the preparing activity upon request.

3.3.5 Case outlines. Case outlines shall be as specified in 1.2.3.

3.4 Lead material and finish. Lead material and finish shall be in accordance with MIL-PRF-38535 (see 6.6).

3.5 Electrical performance characteristics. The electrical performance characteristics are as specified in table 1 and apply over the full recommended case operating temperature range, unless otherwise specified.

3.6 Electrical test requirements. The electrical test requirements for each device class shall be the subgroups specified in table II. The electrical tests for each subgroup are described in table III.

3.7 Marking. Marking shall be in accordance with MIL-PRF-38535.

3.8 Microcircuit group assignment. The devices covered by this specification shall be in microcircuit group number 4 (see MIL-PRF-38535, appendix A).

4. VERIFICATION

4.1 Sampling and inspection. Sampling and inspection procedures shall be in accordance with MIL-PRF-38535 or as modified in the device manufacturer's Quality Management (QM) plan. The modification in the QM plan shall not effect the form, fit, or function as described herein.

4.2 Qualification inspection. Qualification inspection shall be in accordance with MIL-PRF-38535.

4.2 Screening. Screening shall be in accordance with MIL-PRF-38535 and shall be conducted on all devices prior to qualification and conformance inspection. The following additional criteria shall apply:

a. The burn-in test duration, test condition, and test temperature, or approved alternatives shall be as specified in the device manufacturer's QM plan in accordance with MIL-PRF-38535. The burn-in test circuit shall be maintained under document control by the device manufacturer's Technology Review Board (TRB) in accordance with MIL-PRF-38535 and shall be made available to the acquiring or preparing activity upon request. The test circuit shall specify the inputs, outputs, biases, and power dissipation, as applicable, in accordance with the intent specified in test method 1015 of MIL-STD-883.

b. Interim and final electrical test parameters shall be as specified in table II, except interim electrical parameters test prior to burn-in is optional at the discretion of the manufacturer.

c. Additional screening for space level product shall be as specified in MIL-PRF-38535.

TABLE I. Electrical performance characteristics.

Test	Symbol	Conditions $-55°C \le T_C \le +125°C$ unless otherwise specified	Test limits		
			Min	Max	Unit
High level output voltage	V_{OH}	V_{CC} = 4.5 V, V_{IH} = 2.0 V V_{IL} = 0.8 V, I_{OH} = -800 μA	2.4	---	V
Low level output voltage	V_{OL}	V_{CC} = 4.5 V, V_{IH} = 2.0 V V_{IL} = 0.8 V, I_{OL} = 16 mA	---	0.4	V
Input clamp voltage	V_{IC}	V_{CC} = 4.5 V, I_{IN} = -12 mA T_C = 25°C	---	-1.5	V
High level input current	I_{IH1}	V_{CC} = 5.5 V, V_{IN} = 2.4 V	---	40	μA
High level input current (EVEN IN and ODD IN)	I_{IH2}	V_{CC} = 5.5 V, V_{IN} = 2.4 V	---	80	μA
High level input current	I_{IH3}	V_{CC} = 5.5 V, V_{IN} = 5.5 V	---	100	μA
High level input current (EVEN IN and ODD IN)	I_{IH4}	V_{CC} = 5.5 V, V_{IN} = 5.5 V	---	200	μA
Low level input current	I_{IL1}	V_{CC} = 5.5 V, V_{IN} = 0.4 V	-0.7	-1.6	mA
Low level input current (EVEN IN and ODD IN)	I_{IL2}	V_{CC} = 5.5 V, V_{IN} = 0.4 V	-0.7	-3.2	mA
Short circuit output current	I_{OS}	V_{CC} = 5.5 V 1/	-20	-55	mA
Supply current	I_{CC}	V_{CC} = 5.5 V, V_{ODD} = V_{EVEN} = 2.4 V	---	49	mA
Propagation delay to high logic level (data to ∑ EVEN, EVEN IN grounded)	t_{PLH1}	C_L = 50 pF, R_L = 400 Ω	2	67	ns
Propagation delay to low logic level (data to ∑ EVEN, EVEN IN grounded)	t_{PHL1}		2	54	ns
Propagation delay to high logic level (data to ∑ EVEN, ODD IN grounded)	t_{PLH2}		2	83	ns
Propagation delay to low logic level (data to ∑ EVEN, ODD IN grounded)	t_{PHL2}		2	96	ns
Propagation delay to high logic level (data to ∑ ODD, ODD IN grounded)	t_{PLH3}		2	67	ns
Propagation delay to low logic level (data to ∑ ODD, ODD IN grounded)	t_{PHL3}		2	54	ns
Propagation delay to high logic level (data to ∑ ODD, EVEN IN grounded)	t_{PLH4}		2	83	ns
Propagation delay to low logic level (data to ∑ ODD, EVEN IN grounded)	t_{PHL4}		2	93	ns
Propagation delay to high logic level (EVEN or ODD to ∑ EVEN or ∑ ODD)	t_{PLH5}		2	31	ns
Propagation delay to low logic level (EVEN or ODD to ∑ EVEN or ∑ ODD)	t_{PHL5}		2	19	ns

1/ Not more than one output should be shorted at a time.

TABLE II. Electrical test requirements.

MIL-PRF-38535 Test requirement	Subgroups (see table III)	
	Class S Devices	Class B Devices
Interim electrical parameters	1	1
Final electrical test parameters	1*, 2, 3, 9 10, 11	1*, 2, 3, 9
Group A test requirements	1, 2, 3, 9, 10, 11	1, 2, 3, 9, 10, 11
Group B electrical test parameters when using the method 5005 QCI option	1, 2, 3	N/A
Groups C end point electrical parameters	1, 2, 3	1, 2, 3
Group D end point electrical parameters	1, 2, 3	1, 2, 3

*PDA applies to subgroup 1.

4.3 Qualification inspection. Qualification inspection shall be in accordance with MIL-PRF-38535.

4.4 Technology Conformance Inspection (TCI). Technology conformance inspection shall be in accordance with MIL-PRF-38535 and herein for groups A, B, C, and D inspections (see 4.4.1 through 4.4.4).

4.4.1 Group A inspection. Group A inspection shall be in accordance with table III of MIL-PRF-38535 and as follows:

a. Tests shall be as specified in table II herein.

b. Subgroups 4, 5, 6, 7, and 8 shall be omitted.

4.4.2 Group B inspection. Group B inspection shall be in accordance with table II of MIL-PRF-38535.

4.4.3 Group C inspection. Group C inspection shall be in accordance with table IV of MIL-PRF-38535 and as follows:

a. End point electrical parameters shall be as specified in table II herein.

b. The steady-state life test duration, test condition, and test temperature, or approved alternatives shall be as specified in the device manufacturer's QM plan in accordance with MIL-PRF-38535. The burn-in test circuit shall be maintained under document control by the device manufacturer's Technology Review Board (TRB) in accordance with MIL-PRF-38535 and shall be made available to the acquiring or preparing activity upon request. The test circuit shall specify the inputs, outputs, biases, and power dissipation, as applicable, in accordance with the intent specified in test method 1005 of MIL-STD-883.

4.4.4 Group D inspection. Group D inspection shall be in accordance with table V of MIL-PRF-38535. End-point electrical parameters shall be as specified in table II herein.

4.5 Methods inspection. Methods of inspection shall be as specified in the appropriate tables and as follows:

4.5.1 Voltage and current. All voltages given are referenced to the microcircuit ground terminal. Currents given are conventional current and positive when flowing into the referenced terminal.

Terminal number	Cases A, B, C, D
1	G IN
2	H IN
3	EVEN IN
4	ODD IN
5	∑ EVEN
6	∑ ODD
7	GND
8	A IN
9	B IN
10	C IN
11	D IN
12	E IN
13	F IN
14	V_{CC}

Figure 1. Terminal connections.

INPUTS			OUTPUTS	
∑ of H's At A thru H	EVEN	ODD	∑ EVEN	∑ ODD
EVEN	H	L	H	L
ODD	H	L	L	L
EVEN	L	H	L	H
ODD	L	H	H	L
X	H	H	L	L
X	L	L	H	H

X = Irrelevant

FIGURE 2. Truth table.

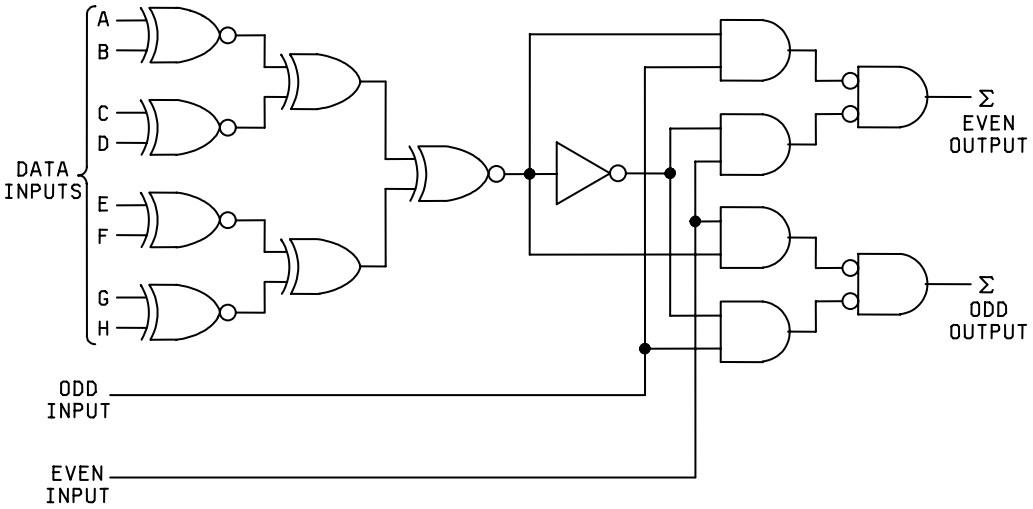

FIGURE 3. Logic diagram.

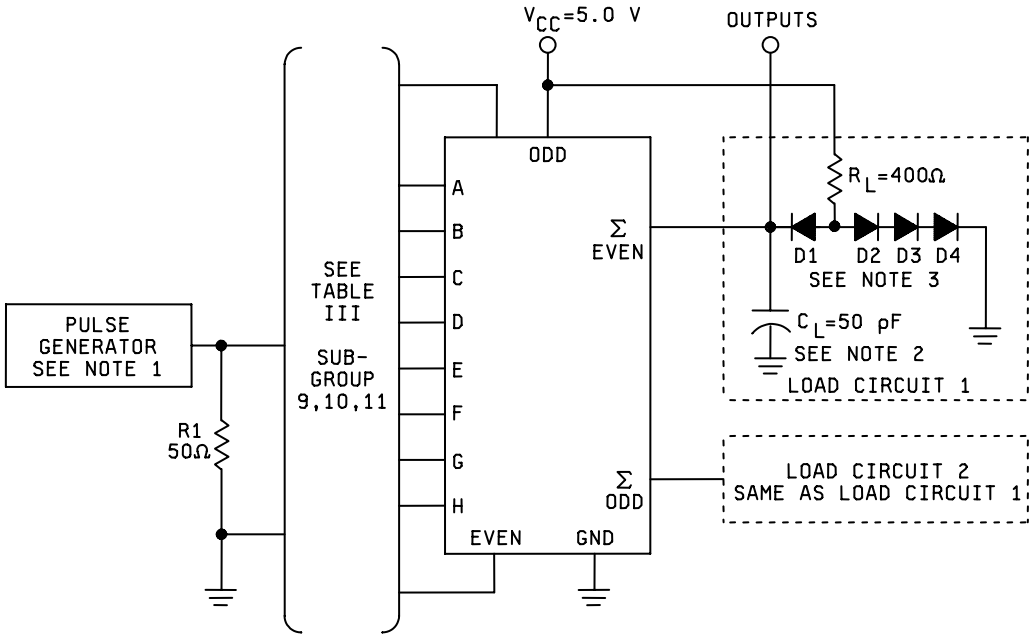

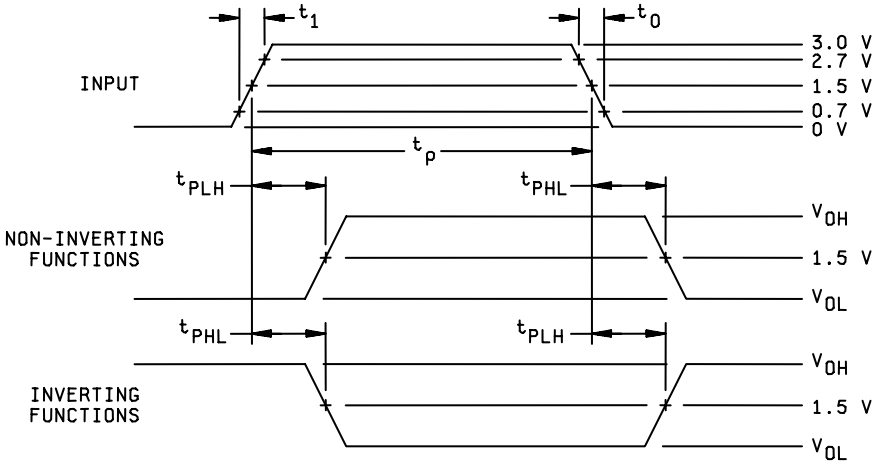

NOTES:

1. The pulse generator has the following characteristics: Vgen = 3 V, $t_1 = t_0 = 10$ ns, $t_P = 500$ ns, PRR = 1 MHz and $Z_{OUT} \approx 50\ \Omega$.
2. C_L includes probe and jig capacitance.
3. All diodes are 1N3064 or equivalent.
4. Load circuits for a given output are required only when the specific test in table III indicates "OUT" for that output. Otherwise load circuits may be omitted.

Figure 4. Switching time test circuit.

TABLE III. Group A inspection for device type 01.

Terminal conditions (pins not designated may be high ≥ 2.0 V or low ≤ .8 V, or open)

Subgroup	Symbol	MIL-STD-883 method	Cases A,B,C,D Test No.	1 G IN	2 H IN	3 EVEN IN	4 ODD IN	5 ΣEVEN	6 ΣODD	7 GND	8 A IN	9 B IN	10 C IN	11 D IN	12 E IN	13 F IN	14 V_{CC}	Meas. terminal	Test limits Min	Max	Unit
1	V_{OH}	3006	1	2.0 V	0.8 V	0.8 V	0.8 V	-.8 mA		GND	2.0 V	0.8 V	2.0 V	0.8 V	2.0 V	0.8 V	4.5 V	ΣEVEN	2.4		V
T_C = 25°C	"	"	2	"	0.8 V	0.8 V	0.8 V		-.8 mA	"	"	"	"	"	"	"	"	ΣODD	"		"
	"	"	3	"	0.8 V	2.0 V	0.8 V	-.8 mA		"	"	"	"	"	"	"	"	ΣEVEN	"		"
	"	"	4	"	2.0 V	2.0 V	0.8 V		-.8 mA	"	"	"	"	"	"	"	"	ΣODD	"		"
	"	"	5	"	0.8 V	0.8 V	2.0 V		-.8 mA	"	"	"	"	"	"	"	"	ΣODD	"		"
	"	"	6	"	2.0 V	0.8 V	2.0 V	-.8 mA		"	"	"	"	"	"	"	"	ΣEVEN	"		"
	V_{OL}	3007	7	"	0.8 V	2.0 V	2.0 V	16 mA		"	"	"	"	"	"	"	"	ΣEVEN		0.4	"
	"	"	8	"	0.8 V	2.0 V	2.0 V		16 mA	"	"	"	"	"	"	"	"	ΣODD		"	"
	"	"	9	"	0.8 V	2.0 V	0.8 V		16 mA	"	"	"	"	"	"	"	"	ΣODD		"	"
	"	"	10	"	2.0 V	2.0 V	0.8 V	16 mA		"	"	"	"	"	"	"	"	ΣEVEN		"	"
	"	"	11	"	0.8 V	0.8 V	2.0 V	16 mA		"	"	"	"	"	"	"	"	ΣEVEN		"	"
	"	"	12	"	2.0 V	0.8 V	2.0 V		16 mA	"	"	"	"	"	"	"	"	ΣODD		"	"
	V_{IC}		13							"	-12 mA						"	A IN		-1..5	"
	"		14							"		-12 mA					"	B IN		"	"
	"		15							"			-12 mA				"	C IN		"	"
	"		16							"				-12 mA			"	D IN		"	"
	"		17							"					-12 mA		"	E IN		"	"
	"		18							"						-12 mA	"	F IN		"	"
	"		19	-12 mA						"							"	G IN		"	"
	"		20		-12 mA					"							"	H IN		"	"
	"		21			-12 mA				"							"	EVEN IN		"	"
	"		22				-12 mA			"							"	ODD IN		"	"
	I_{IH1}	3010	23							"	2.4 V						5.5 V	A IN		40	μA
	"	"	24							"		2.4 V					"	B IN		"	"
	"	"	25							"			2.4 V				"	C IN		"	"
	"	"	26							"				2.4 V			"	D IN		"	"
	"	"	27							"					2.4 V		"	E IN		"	"
	"	"	28							"						2.4 V	"	F IN		"	"
	"	"	29	2.4 V						"							"	G IN		"	"
	"	"	30		2.4 V					"							"	H IN		"	"
	I_{IH2}	"	31	4.5 V	GND	2.4 V				"	4.5 V	GND	4.5 V	GND	4.5 V	GND	"	EVEN IN		80	μA
	"	"	32	"	"		2.4 V			"	"	GND	"	"	"	"	"	ODD IN		"	"
	"	"	33	"	"	2.4 V				"	"	4.5 V	"	"	"	"	"	EVEN IN		"	"
	"	"	34	"	"		2.4 V			"	"	4.5 V	"	"	"	"	"	ODD IN		"	"
	I_{IH3}	"	35							"	5.5 V						"	A IN		100	μA
	"	"	36							"		5.5 V					"	B IN		"	"
	"	"	37							"			5.5 V				"	C IN		"	"
	"	"	38							"				5.5 V			"	D IN		"	"
	"	"	39							"					5.5 V		"	E IN		"	"
	"	"	40							"						5.5 V	"	F IN		"	"
	"	"	41	5.5 V						"							"	G IN		"	"
	"	"	42		5.5 V					"							"	H IN		"	"
	I_{IH4}	"	43	4.5 V	GND	5.5 V				"	4.5 V	GND	4.5 V	GND	4.5 V	GND	"	EVEN IN		200	μA
	"	"	44	"	"		5.5 V			"	"	GND	"	"	"	"	"	ODD IN		"	"
	"	"	45	"	"	5.5 V				"	"	4.5 V	"	"	"	"	"	EVEN IN		"	"
	"	"	46	"	"		5.5 V			"	"	4.5 V	"	"	"	"	"	ODD IN		"	"

TABLE III. Group A inspection for device type 01 – Continued.

Terminal conditions (pins not designated may be high ≥ 2.0 V or low ≤ .8 V, or open)

Subgroup	Symbol	MIL-STD-883 method	Cases A,B,C,D Test No.	1 G IN	2 H IN	3 EVEN IN	4 ODD IN	5 ΣEVEN	6 ΣODD	7 GND	8 A IN	9 B IN	10 C IN	11 D IN	12 E IN	13 F IN	14 V_{CC}	Meas. terminal	Test limits Min	Test limits Max	Test limits Unit
1 T_C = 25°C	I_{IL1}	3009	47							GND	0.4 V						5.5 V	A IN	-0.7	-1.6	mA
	"	"	48							"		0.4 V					"	B IN	"	"	"
	"	"	49							"			0.4 V				"	C IN	"	"	"
	"	"	50							"				0.4 V			"	D IN	"	"	"
	"	"	51							"					0.4 V		"	E IN	"	"	"
	"	"	52							"						0.4 V	"	F IN	"	"	"
	"	"	53	0.4 V						"							"	G IN	"	"	"
	"	"	54		0.4 V					"							"	H IN	"	"	"
	I_{IL2}	"	55	2.0 V	GND	0.4 V				"	2.0 V	GND	2.0 V	GND	2.0 V	GND	"	EVEN IN	-0.7	-3.2	"
	"	"	56	"	"		0.4 V			"	"	GND	"	"	"	"	"	ODD IN	"	"	"
	"	"	57	"	"	0.4 V				"	"	2.0 V	"	"	"	"	"	EVEN IN	"	"	"
	"	"	58	"	"		0.4 V			"	"	2.0 V	"	"	"	"	"	ODD IN	"	"	"
	I_{OS}	3011	59	0.8 V	2.0 V	GND	GND	GND		"	2.0 V	0.8 V	2.0 V	0.8 V	0.8 V	2.0 V	"	ΣEVEN	-20	-55	"
	I_{OS}	3011	60	0.8 V	2.0 V	GND	GND		GND	"	2.0 V	0.8 V	2.0 V	0.8 V	0.8 V	2.0 V	"	ΣODD	-20	-55	"
	I_{CC}	3005	61			2.4 V	2.4 V			"							"	V_{CC}		49	"
2	Same tests, terminal conditions, and limits as subgroup 1, except T_C = 125°C and V_{IC} tests are omitted.																				
3	Same tests, terminal conditions, and limits as subgroup 1, except T_C = -55°C and V_{IC} tests are omitted.																				
9 T_C = 25°C	t_{PLH1}	3003 Fig 4	62	GND	GND	GND	5.0 V	OUT		GND	IN	GND	GND	GND	GND	GND	5.0 V	A IN to ΣEVEN	2	52	ns
	"	"	63	"	"	"	"	"		"	GND	IN	GND	"	"	"	"	B IN to ΣEVEN	"	"	"
	"	"	64	"	"	"	"	"		"	"	GND	IN	"	"	"	"	C IN to ΣEVEN	"	"	"
	"	"	65	"	"	"	"	"		"	"	"	GND	IN	"	"	"	D IN to ΣEVEN	"	"	"
	"	"	66	"	"	"	"	"		"	"	"	"	GND	IN	"	"	E IN to ΣEVEN	"	"	"
	"	"	67	"	"	"	"	"		"	"	"	"	"	GND	IN	"	F IN to ΣEVEN	"	"	"
	"	"	68	IN	"	"	"	"		"	"	"	"	"	"	GND	"	G IN to ΣEVEN	"	"	"
	"	"	69	GND	IN	"	"	"		"	"	"	"	"	"	GND	"	H IN to ΣEVEN	"	"	"

TABLE III. Group A inspection for device type 01 – Continued.

Terminal conditions (pins not designated may be high ≥ 2.0 V or low ≤ .8 V, or open)

Subgroup	Symbol	MIL-STD-883 method	Cases A,B,C,D	1	2	3	4	5	6	7	8	9	10	11	12	13	14	Meas. terminal	Test limits		
			Test No.	G IN	H IN	EVEN IN	ODD IN	ΣEVEN	ΣODD	GND	A IN	B IN	C IN	D IN	E IN	F IN	V_{CC}		Min	Max	Unit
9 $T_C = 25°C$	t_{PHL1}	3003 Fig 4	70	GND	GND	GND	5.0 V	OUT		GND	IN	GND	GND	GND	GND	GND	5.0 V	A IN to ΣEVEN	2	42	ns
	"	"	71	"	"	"	"	"		"	GND	IN	GND	"	"	"	"	B IN to ΣEVEN	"	"	"
	"	"	72	"	"	"	"	"		"	"	GND	IN	"	"	"	"	C IN to ΣEVEN	"	"	"
	"	"	73	"	"	"	"	"		"	"	"	GND	IN	"	"	"	D IN to ΣEVEN	"	"	"
	"	"	74	"	"	"	"	"		"	"	"	"	GND	IN	"	"	E IN to ΣEVEN	"	"	"
	"	"	75	"	"	"	"	"		"	"	"	"	"	GND	IN	"	F IN to ΣEVEN	"	"	"
	"	"	76	IN	"	"	"	"		"	"	"	"	"	"	GND	"	G IN to ΣEVEN	"	"	"
	"	"	77	GND	IN	"	"	"		"	"	"	"	"	"	GND	"	H IN to ΣEVEN	"	"	"
	t_{PLH2}	"	78	GND	GND	5.0 V	GND	OUT		"	IN	GND	GND	GND	GND	GND	"	A IN to ΣEVEN	"	64	"
	"	"	79	"	"	"	"	"		"	GND	IN	GND	"	"	"	"	B IN to ΣEVEN	"	"	"
	"	"	80	"	"	"	"	"		"	"	GND	IN	"	"	"	"	C IN to ΣEVEN	"	"	"
	"	"	81	"	"	"	"	"		"	"	"	GND	IN	"	"	"	D IN to ΣEVEN	"	"	"
	"	"	82	"	"	"	"	"		"	"	"	"	GND	IN	"	"	E IN to ΣEVEN	"	"	"
	"	"	83	"	"	"	"	"		"	"	"	"	"	GND	IN	"	F IN to ΣEVEN	"	"	"
	"	"	84	IN	"	"	"	"		"	"	"	"	"	"	GND	"	G IN to ΣEVEN	"	"	"
	"	"	85	GND	IN	"	"	"		"	"	"	"	"	"	GND	"	H IN to ΣEVEN	"	"	"
	t_{PHL2}	"	86	GND	GND	5.0 V	GND	OUT		"	IN	GND	GND	GND	GND	GND	"	A IN to ΣEVEN	"	72	"
	"	"	87	"	"	"	"	"		"	GND	IN	GND	"	"	"	"	B IN to ΣEVEN	"	"	"
	"	"	88	"	"	"	"	"		"	"	GND	IN	"	"	"	"	C IN to ΣEVEN	"	"	"
	"	"	89	"	"	"	"	"		"	"	"	GND	IN	"	"	"	D IN to ΣEVEN	"	"	"
	"	"	90	"	"	"	"	"		"	"	"	"	GND	IN	"	"	E IN to ΣEVEN	"	"	"
	"	"	91	"	"	"	"	"		"	"	"	"	"	GND	IN	"	F IN to ΣEVEN	"	"	"
	"	"	92	IN	"	"	"	"		"	"	"	"	"	"	GND	"	G IN to ΣEVEN	"	"	"
	"	"	93	GND	IN	"	"	"		"	"	"	"	"	"	GND	"	H IN to ΣEVEN	"	"	"

TABLE III. Group A inspection for device type 01 – Continued.

Terminal conditions (pins not designated may be high ≥ 2.0 V or low ≤ .8 V, or open)

Subgroup	Symbol	MIL-STD-883 method	Cases A,B,C,D	1	2	3	4	5	6	7	8	9	10	11	12	13	14	Meas. terminal	Test limits		
			Test No.	G IN	H IN	EVEN IN	ODD IN	ΣEVEN	ΣODD	GND	A IN	B IN	C IN	D IN	E IN	F IN	V_{CC}		Min	Max	Unit
9 $T_C = 25°C$	t_{PLH3}	3003 Fig 4	94	GND	GND	5.0 V	GND		OUT	GND	IN	GND	GND	GND	GND	GND	5.0 V	A IN to ΣODD	2	52	ns
	"	"	95	"	"	"	"		"	"	GND	IN	GND	"	"	"	"	B IN to ΣODD	"	"	"
	"	"	96	"	"	"	"		"	"	"	GND	IN	"	"	"	"	C IN to ΣODD	"	"	"
	"	"	97	"	"	"	"		"	"	"	"	GND	IN	"	"	"	D IN to ΣODD	"	"	"
	"	"	98	"	"	"	"		"	"	"	"	"	GND	IN	"	"	E IN to ΣODD	"	"	"
	"	"	99	"	"	"	"		"	"	"	"	"	"	GND	IN	"	F IN to ΣODD	"	"	"
	"	"	100	IN	"	"	"		"	"	"	"	"	"	"	GND	"	G IN to ΣODD	"	"	"
	"	"	101	GND	IN	"	"		"	"	"	"	"	"	"	GND	"	H IN to ΣODD	"	"	"
	t_{PHL3}	"	102	GND	GND	5.0 V	GND		OUT	"	IN	GND	GND	GND	GND	GND	"	A IN to ΣODD	"	42	"
	"	"	103	"	"	"	"		"	"	GND	IN	GND	"	"	"	"	B IN to ΣODD	"	"	"
	"	"	104	"	"	"	"		"	"	"	GND	IN	"	"	"	"	C IN to ΣODD	"	"	"
	"	"	105	"	"	"	"		"	"	"	"	GND	IN	"	"	"	D IN to ΣODD	"	"	"
	"	"	106	"	"	"	"		"	"	"	"	"	GND	IN	"	"	E IN to ΣODD	"	"	"
	"	"	107	"	"	"	"		"	"	"	"	"	"	GND	IN	"	F IN to ΣODD	"	"	"
	"	"	108	IN	"	"	"		"	"	"	"	"	"	"	GND	"	G IN to ΣODD	"	"	"
	"	"	109	GND	IN	"	"		"	"	"	"	"	"	"	GND	"	H IN to ΣODD	"	"	"
	t_{PLH4}	"	110	GND	GND	GND	5.0 V		OUT	"	IN	GND	GND	GND	GND	GND	"	A IN to ΣODD	"	64	"
	"	"	111	"	"	"	"		"	"	GND	IN	GND	"	"	"	"	B IN to ΣODD	"	"	"
	"	"	112	"	"	"	"		"	"	"	GND	IN	"	"	"	"	C IN to ΣODD	"	"	"
	"	"	113	"	"	"	"		"	"	"	"	GND	IN	"	"	"	D IN to ΣODD	"	"	"
	"	"	114	"	"	"	"		"	"	"	"	"	GND	IN	"	"	E IN to ΣODD	"	"	"
	"	"	115	"	"	"	"		"	"	"	"	"	"	GND	IN	"	F IN to ΣODD	"	"	"
	"	"	116	IN	"	"	"		"	"	"	"	"	"	"	GND	"	G IN to ΣODD	"	"	"
	"	"	117	GND	IN	"	"		"	"	"	"	"	"	"	GND	"	H IN to ΣODD	"	"	"

TABLE III. Group A inspection for device type 01 – Continued.

Terminal conditions (pins not designated may be high ≥ 2.0 V or low ≤ .8 V, or open)

Subgroup	Symbol	MIL-STD-883 method	Cases A,B,C,D Test No.	1 G IN	2 H IN	3 EVEN IN	4 ODD IN	5 ΣEVEN	6 ΣODD	7 GND	8 A IN	9 B IN	10 C IN	11 D IN	12 E IN	13 F IN	14 V_{CC}	Meas. terminal	Test limits Min	Max	Unit
9 T_C = 25°C	t_{PHL4}	3003 Fig 4	118	GND	GND	GND	5.0 V		OUT	GND	IN	GND	GND	GND	GND	GND	5.0 V	A IN to ΣODD	2	72	ns
	"	"	119	"	"	"	"		"	"	GND	IN	GND	"	"	"	"	B IN to ΣODD	"	"	"
	"	"	120	"	"	"	"		"	"	"	GND	IN	"	"	"	"	C IN to ΣODD	"	"	"
	"	"	121	"	"	"	"		"	"	"	"	GND	IN	"	"	"	D IN to ΣODD	"	"	"
	"	"	122	"	"	"	"		"	"	"	"	"	GND	IN	"	"	E IN to ΣODD	"	"	"
	"	"	123	"	"	"	"		"	"	"	"	"	"	GND	IN	"	F IN to ΣODD	"	"	"
	"	"	124	IN	"	"	"		"	"	"	"	"	"	"	GND	"	G IN to ΣODD	"	"	"
	"	"	125	GND	IN	"	"		"	"	"	"	"	"	"	GND	"	H IN to ΣODD	"	"	"
	t_{PLH5}	"	126	5.0 V	5.0 V	IN	GND	OUT		"	GND	5.0 V	5.0 V	5.0 V	5.0 V	5.0 V	"	EVEN IN to ΣEVEN	"	24	"
	"	"	127	"	"	IN	GND		OUT	"	5.0 V	"	"	"	"	"	"	EVEN IN to ΣODD	"	"	"
	"	"	128	"	"	GND	IN	OUT		"	5.0 V	"	"	"	"	"	"	EVEN IN to ΣEVEN	"	"	"
	"	"	129	"	"	GND	IN		OUT	"	GND	"	"	"	"	"	"	EVEN IN to ΣODD	"	"	"
	t_{PHL5}	"	130	5.0 V	5.0 V	IN	GND	OUT		"	GND	5.0 V	5.0 V	5.0 V	5.0 V	5.0 V	"	EVEN IN to ΣEVEN	"	14	"
	"	"	131	"	"	IN	GND		OUT	"	5.0 V	"	"	"	"	"	"	EVEN IN to ΣODD	"	"	"
	"	"	132	"	"	GND	IN	OUT		"	5.0 V	"	"	"	"	"	"	EVEN IN to ΣEVEN	"	"	"
	"	"	133	"	"	GND	IN		OUT	"	GND	"	"	"	"	"	"	EVEN IN to ΣODD	"	"	"
10 T_C = 125°C	t_{PLH1}	3003 Fig 4	134	GND	GND	GND	5.0 V	OUT		GND	IN	GND	GND	GND	GND	GND	5.0 V	A IN to ΣEVEN	"	67	ns
	"	"	135	"	"	"	"	"		"	GND	IN	GND	"	"	"	"	B IN to ΣEVEN	"	"	"
	"	"	136	"	"	"	"	"		"	"	GND	IN	"	"	"	"	C IN to ΣEVEN	"	"	"
	"	"	137	"	"	"	"	"		"	"	"	GND	IN	"	"	"	D IN to ΣEVEN	"	"	"
	"	"	138	"	"	"	"	"		"	"	"	"	GND	IN	"	"	E IN to ΣEVEN	"	"	"
	"	"	139	"	"	"	"	"		"	"	"	"	"	GND	IN	"	F IN to ΣEVEN	"	"	"
	"	"	140	IN	"	"	"	"		"	"	"	"	"	"	GND	"	G IN to ΣEVEN	"	"	"
	"	"	141	GND	IN	"	"	"		"	"	"	"	"	"	GND	"	H IN to ΣEVEN	"	"	"

TABLE III. Group A inspection for device type 01 – Continued.

Terminal conditions (pins not designated may be high ≥ 2.0 V or low ≤ .8 V, or open)

Subgroup	Symbol	MIL-STD-883 method	Cases A,B,C,D	1	2	3	4	5	6	7	8	9	10	11	12	13	14	Meas. terminal	Test limits		
			Test No.	G IN	H IN	EVEN IN	ODD IN	ΣEVEN	ΣODD	GND	A IN	B IN	C IN	D IN	E IN	F IN	V_{CC}		Min	Max	Unit
10 T_C = 125°C	t_{PHL1}	3003 Fig 4	142	GND	GND	GND	5.0 V	OUT		GND	IN	GND	GND	GND	GND	GND	5.0 V	A IN to ΣEVEN	2	54	ns
	"	"	143	"	"	"	"	"		"	GND	IN	GND	"	"	"	"	B IN to ΣEVEN	"	"	"
	"	"	144	"	"	"	"	"		"	"	GND	IN	"	"	"	"	C IN to ΣEVEN	"	"	"
	"	"	145	"	"	"	"	"		"	"	"	GND	IN	"	"	"	D IN to ΣEVEN	"	"	"
	"	"	146	"	"	"	"	"		"	"	"	"	GND	IN	"	"	E IN to ΣEVEN	"	"	"
	"	"	147	"	"	"	"	"		"	"	"	"	"	GND	IN	"	F IN to ΣEVEN	"	"	"
	"	"	148	IN	"	"	"	"		"	"	"	"	"	"	GND	"	G IN to ΣEVEN	"	"	"
	"	"	149	GND	IN	"	"	"		"	"	"	"	"	"	GND	"	H IN to ΣEVEN	"	"	"
	t_{PLH2}	"	150	GND	GND	5.0 V	GND	OUT		"	IN	GND	GND	GND	GND	GND	"	A IN to ΣEVEN	"	83	"
	"	"	151	"	"	"	"	"		"	GND	IN	GND	"	"	"	"	B IN to ΣEVEN	"	"	"
	"	"	152	"	"	"	"	"		"	"	GND	IN	"	"	"	"	C IN to ΣEVEN	"	"	"
	"	"	153	"	"	"	"	"		"	"	"	GND	IN	"	"	"	D IN to ΣEVEN	"	"	"
	"	"	154	"	"	"	"	"		"	"	"	"	GND	IN	"	"	E IN to ΣEVEN	"	"	"
	"	"	155	"	"	"	"	"		"	"	"	"	"	GND	IN	"	F IN to ΣEVEN	"	"	"
	"	"	156	IN	"	"	"	"		"	"	"	"	"	"	GND	"	G IN to ΣEVEN	"	"	"
	"	"	157	GND	IN	"	"	"		"	"	"	"	"	"	GND	"	H IN to ΣEVEN	"	"	"
	t_{PHL2}	"	158	GND	GND	5.0 V	GND	OUT		"	IN	GND	GND	GND	GND	GND	"	A IN to ΣEVEN	"	96	"
	"	"	159	"	"	"	"	"		"	GND	IN	GND	"	"	"	"	B IN to ΣEVEN	"	"	"
	"	"	160	"	"	"	"	"		"	"	GND	IN	"	"	"	"	C IN to ΣEVEN	"	"	"
	"	"	161	"	"	"	"	"		"	"	"	GND	IN	"	"	"	D IN to ΣEVEN	"	"	"
	"	"	162	"	"	"	"	"		"	"	"	"	GND	IN	"	"	E IN to ΣEVEN	"	"	"
	"	"	163	"	"	"	"	"		"	"	"	"	"	GND	IN	"	F IN to ΣEVEN	"	"	"
	"	"	164	IN	"	"	"	"		"	"	"	"	"	"	GND	"	G IN to ΣEVEN	"	"	"
	"	"	165	GND	IN	"	"	"		"	"	"	"	"	"	GND	"	H IN to ΣEVEN	"	"	"

TABLE III. Group A inspection for device type 01 – Continued.

Terminal conditions (pins not designated may be high ≥ 2.0 V or low ≤ .8 V, or open)

Subgroup	Symbol	MIL-STD-883 method	Cases A,B,C,D	1	2	3	4	5	6	7	8	9	10	11	12	13	14	Meas. terminal	Test limits		
			Test No.	G IN	H IN	EVEN IN	ODD IN	ΣEVEN	ΣODD	GND	A IN	B IN	C IN	D IN	E IN	F IN	V_{CC}		Min	Max	Unit
10 T_C = 125°C	t_{PLH3}	3003 Fig 4	166	GND	GND	5.0 V	GND		OUT	GND	IN	GND	GND	GND	GND	GND	5.0 V	A IN to ΣODD	2	67	ns
	"	"	167	"	"	"	"		"	"	GND	IN	GND	"	"	"	"	B IN to ΣODD	"	"	"
	"	"	168	"	"	"	"		"	"	"	GND	IN	"	"	"	"	C IN to ΣODD	"	"	"
	"	"	169	"	"	"	"		"	"	"	"	GND	IN	"	"	"	D IN to ΣODD	"	"	"
	"	"	170	"	"	"	"		"	"	"	"	"	GND	IN	"	"	E IN to ΣODD	"	"	"
	"	"	171	"	"	"	"		"	"	"	"	"	"	GND	IN	"	F IN to ΣODD	"	"	"
	"	"	172	IN	"	"	"		"	"	"	"	"	"	"	GND	"	G IN to ΣODD	"	"	"
	"	"	173	GND	IN	"	"		"	"	"	"	"	"	"	GND	"	H IN to ΣODD	"	"	"
	t_{PHL3}	"	174	GND	GND	5.0 V	GND		OUT	"	IN	GND	GND	GND	GND	GND	"	A IN to ΣODD	"	54	"
	"	"	175	"	"	"	"		"	"	GND	IN	GND	"	"	"	"	B IN to ΣODD	"	"	"
	"	"	176	"	"	"	"		"	"	"	GND	IN	"	"	"	"	C IN to ΣODD	"	"	"
	"	"	177	"	"	"	"		"	"	"	"	GND	IN	"	"	"	D IN to ΣODD	"	"	"
	"	"	178	"	"	"	"		"	"	"	"	"	GND	IN	"	"	E IN to ΣODD	"	"	"
	"	"	179	"	"	"	"		"	"	"	"	"	"	GND	IN	"	F IN to ΣODD	"	"	"
	"	"	180	IN	"	"	"		"	"	"	"	"	"	"	GND	"	G IN to ΣODD	"	"	"
	"	"	181	GND	IN	"	"		"	"	"	"	"	"	"	GND	"	H IN to ΣODD	"	"	"
	t_{PLH4}	"	182	GND	GND	GND	5.0 V		OUT	"	IN	GND	GND	GND	GND	GND	"	A IN to ΣODD	"	83	"
	"	"	183	"	"	"	"		"	"	GND	IN	GND	"	"	"	"	B IN to ΣODD	"	"	"
	"	"	184	"	"	"	"		"	"	"	GND	IN	"	"	"	"	C IN to ΣODD	"	"	"
	"	"	185	"	"	"	"		"	"	"	"	GND	IN	"	"	"	D IN to ΣODD	"	"	"
	"	"	186	"	"	"	"		"	"	"	"	"	GND	IN	"	"	E IN to ΣODD	"	"	"
	"	"	187	"	"	"	"		"	"	"	"	"	"	GND	IN	"	F IN to ΣODD	"	"	"
	"	"	188	IN	"	"	"		"	"	"	"	"	"	"	GND	"	G IN to ΣODD	"	"	"
	"	"	189	GND	IN	"	"		"	"	"	"	"	"	"	GND	"	H IN to ΣODD	"	"	"

TABLE III. Group A inspection for device type 01 – Continued.

Terminal conditions (pins not designated may be high ≥ 2.0 V or low ≤ .8 V, or open)

Subgroup	Symbol	MIL-STD-883 method	Cases A,B,C,D	1	2	3	4	5	6	7	8	9	10	11	12	13	14	Meas. terminal	Test limits		
			Test No.	G IN	H IN	EVEN IN	ODD IN	ΣEVEN	ΣODD	GND	A IN	B IN	C IN	D IN	E IN	F IN	V_{CC}		Min	Max	Unit
10 T_C = 125°C	t_{PHL4}	3003 Fig 4	190	GND	GND	GND	5.0 V		OUT	GND	IN	GND	GND	GND	GND	GND	5.0 V	A IN to ΣODD	2	93	ns
	"	"	191	"	"	"	"		"	"	GND	IN	GND	"	"	"	"	B IN to ΣODD	"	"	"
	"	"	192	"	"	"	"		"	"	"	GND	IN	"	"	"	"	C IN to ΣODD	"	"	"
	"	"	193	"	"	"	"		"	"	"	"	GND	IN	"	"	"	D IN to ΣODD	"	"	"
	"	"	194	"	"	"	"		"	"	"	"	"	GND	IN	"	"	E IN to ΣODD	"	"	"
	"	"	195	"	"	"	"		"	"	"	"	"	"	GND	IN	"	F IN to ΣODD	"	"	"
	"	"	196	IN	"	"	"		"	"	"	"	"	"	"	GND	"	G IN to ΣODD	"	"	"
	"	"	197	GND	IN	"	"		"	"	"	"	"	"	"	GND	"	H IN to ΣODD	"	"	"
	t_{PLH5}	"	198	5.0 V	5.0 V	IN	GND	OUT		"	GND	5.0 V	5.0 V	5.0 V	5.0 V	5.0 V	"	EVEN IN to ΣEVEN	"	31	"
	"	"	199	"	"	IN	GND		OUT	"	5.0 V	"	"	"	"	"	"	EVEN IN to ΣODD	"	"	"
	"	"	200	"	"	GND	IN	OUT		"	5.0 V	"	"	"	"	"	"	EVEN IN to ΣEVEN	"	"	"
	"	"	201	"	"	GND	IN		OUT	"	GND	"	"	"	"	"	"	EVEN IN to ΣODD	"	"	"
	t_{PHL5}	"	202	5.0 V	5.0 V	IN	GND	OUT		"	GND	5.0 V	5.0 V	5.0 V	5.0 V	5.0 V	"	EVEN IN to ΣEVEN	"	17	"
	"	"	203	"	"	IN	GND		OUT	"	5.0 V	"	"	"	"	"	"	EVEN IN to ΣODD	"	"	"
	"	"	204	"	"	GND	IN	OUT		"	5.0 V	"	"	"	"	"	"	EVEN IN to ΣEVEN	"	"	"
	"	"	205	"	"	GND	IN		OUT	"	GND	"	"	"	"	"	"	EVEN IN to ΣODD	"	"	"
11	Same tests, terminal conditions, and limits as subgroup 10, except T_C = -55°C.																				

5. PACKAGING

5.1 Packaging requirements. For acquisition purposes, the packaging requirements shall be as specified in the contract or order (see 6.2). When packaging of materiel is to be performed by DoD or in-house contractor personnel, these personnel need to contact the responsible packaging activity to ascertain packaging requirements. Packaging requirements are maintained by the Inventory Control Point's packaging activity within the Military Service or Defense Agency, or within the military service's system command. Packaging data retrieval is available from the managing Military Department's or Defense Agency's automated packaging files, CD-ROM products, or by contacting the responsible packaging activity.

6. NOTES

(This section contains information of a general or explanatory nature that may be helpful, but it is not mandatory)

6.1 Intended use. Microcircuits conforming to this specification are intended for logistic support of existing equipment.

6.2 Acquisition requirements. Acquisition documents should specify the following:

a. Title, number, and date of the specification.
b. PIN and compliance identifier, if applicable (see 1.2).
c. Requirements for delivery of one copy of the conformance inspection data pertinent to the device inspection lot to be supplied with each shipment by the device manufacturer, if applicable.
d. Requirement for certificate of compliance, if applicable.
e. Requirements for notification of change of product or process to acquiring activity in addition to notification to the qualifying activity, if applicable.
f. Requirements for failure analysis (including required test condition of method 5003), corrective action and reporting of results, if applicable.
g. Requirements for product assurance options.
h. Requirements for carriers, special lead lengths or lead forming, if applicable. These requirements shall not affect the part number. Unless otherwise specified, these requirements will not apply to direct purchase by or direct shipment to the Government.
i. Requirements for "JAN" marking.
j. Packaging requirements (see 5.1).

6.3 Qualification. With respect to products requiring qualification, awards will be made only for products which are, at the time of award of contract, qualified for inclusion in Qualified Manufacturers List QML-38535 whether or not such products have actually been so listed by that date. The attention of the contractors is called to these requirements, and manufacturers are urged to arrange to have the products that they propose to offer to the Federal Government tested for qualification in order that they may be eligible to be awarded contracts or purchase orders for the products covered by this specification. Information pertaining to qualification of products may be obtained from DSCC-VQ, 3990 E. Broad Street, Columbus, Ohio 43123-1199.

6.4 Superseding information. The requirements of MIL-M-38510 have been superseded to take advantage of the available Qualified Manufacturer Listing (QML) system provided by MIL-PRF-38535. Previous references to MIL-M-38510 in this document have been replaced by appropriate references to MIL-PRF-38535. All technical requirements now consist of this specification and MIL-PRF-38535. The MIL-M-38510 specification sheet number and PIN have been retained to avoid adversely impacting existing government logistics systems and contractor's parts lists.

6.5 Abbreviations, symbols and definitions. The abbreviations, symbols, and definitions used herein are defined in MIL-PRF-38535 and MIL-HDBK-1331, and as follows:

GND ..... Electrical ground (common terminal)
V_{IN} ..... Voltage level at an input terminal

6.6 Logistic support. Lead materials and finishes (see 3.3) are interchangeable. Unless otherwise specified, microcircuits acquired for Government logistic support will be acquired to device class B (see 1.2.2), lead material and finish A (see 3.4). Longer lead lengths and lead forming shall not affect the part number.

6.7 Substitutability. The cross-reference information below is presented for the convenience of users. Microcircuits covered by this specification will functionally replace the listed generic-industry type. Generic-industry microcircuit types may not have equivalent operational performance characteristics across military temperature ranges or reliability factors equivalent to MIL-M-35810 device types and may have slight physical variations in relation to case size. The presence of this information should not be deemed as permitting substitution of generic-industry types for MIL-M-38510 types or as a waiver of any of the provisions of MIL-PRF-38535.

Device type	Commercial type
01	54180

6.8 Changes from previous issue. Marginal notations are not used in this revision to identify changes with respect to the previous issue due to the extensiveness of the changes.

Custodians:
Army - CR
Navy - EC
Air Force - 11
DLA - CC

Preparing activity:
DLA - CC

(Project 5962-2109)

Review activities:
Army - MI, SM
Navy - AS, CG, MC, SH, TD
Air Force - 03, 19, 99

NOTE: The activities listed above were interested in this document as of the date of this document. Since organizations and responsibilities can change, you should verify the currency of the information above using the ASSIST Online database at http://assist.daps.dla.mil.