MIL-M-38510/178A
30 April 1984
SUPERSEDING
MIL-M-38510/178
28 June 1979

# MILITARY SPECIFICATION

## MICROCIRCUITS, DIGITAL, CMOS, MULTIPLEXERS/DEMULTIPLEXERS MONOLITHIC SILICON, POSITIVE LOGIC

This specification is approved for use by all Departments and Agencies of the Department of Defense.

## 1. SCOPE

1.1 Scope. This specification covers the detail requirements for monolithic, silicon, CMOS logic microcircuits. Two product assurance classes and a choice of case outlines and lead finishes are provided and are reflected in the complete part number.

1.2 Part number. The part number shall be in accordance with MIL-M-38510.

1.2.1 Device type. The device type shall be as follows:

| Device type | Circuit |
|---|---|
| 01 | Single 15-channel MUX/DEMUX |
| 02 | Differential 8-channel MUX/DEMUX |
| 03 | Quad 2-line-to-1-line data selector/MUX |

1.2.2 Device class. The device class shall be the product assurance level as defined in MIL-M-38510.

1.2.3 Case outline. The case outline shall be designated as follows:

| Outline letter | Case outline (see MIL-M-38510, appendix C) |
|---|---|
| E | D-2 (16-lead, 1/4" x 7/8"), dual-in-line package |
| F | F-5 (16-lead, 1/4" x 3/8"), flat package |
| J | D-3 (24-lead, 1/2" x 1-1/4"), dual-in-line package |
| K | F-6 (24-lead, 3/8" x 5/8"), flat package |
| Z | F-8 (24-lead, 1/4" x 3/8"), flat package |
| X | F-5 (16-lead, 1/4" x 3/8"), flat package, except A dimension = 0.1" (2.54 mm) max |
| Y | F-6 (24-lead, 3/8" x 5/8"), flat package, except A dimension = 0.1" (2.54 mm) max |
| U | F-8 (24-lead, 1/4" x 3/8"), flat package, except A dimension = 0.1" (2.54 mm) max |

NOTES:

1. As an exception to nickel plate or undercoating paragraph of MIL-M-38510, for case outlines X, Y, and U only, the leads of bottom brazed ceramic packages (i.e., configuration 2 of case outlines F-5, F-6, and F-8) may have electroless nickel undercoating which shall be 50 to 200 microinches (1.27 to 5.08 μm) thick provided the lead finish is hot solder dip (i.e., finish letter A) and provided that, after any lead forming, an additional hot solder dip coating is applied which shall extend from the outer tip of the lead to no more than 0.015 inch (0.38 mm) from the package edge.

2. For bottom or side brazed packages, case outlines F, Y, and U only, the $S_1$ dimension may go to .000 inch (.00 mm) mimimum.

Beneficial comments (recommendations, additions, deletions) and any pertinent data which may be of use in improving this document should be addressed to: George C, Marshall Space Flight Center, National Aeronautics and Space Administration, ATTN: EG02, Marshall Space Flight Center, AL 35812 by using the self-addressed Standardization Document Improvement Proposal (DD Form 1426) appearing at the end of this document or by letter.

1.3 Absolute maximum ratings.

| | |
|---|---|
| Supply voltage range ($V_{DD}$-$V_{SS}$)- - - - - - | -0.5 V to +18 V |
| Input current (each input)- - - - - - - - | ±10 mA |
| Input voltage range - - - - - - - - - - - - | ($V_{SS}$ - 0.5) $\leq V_I \leq$ ($V_{DD}$ +0.5) |
| Storage temperature range - - - - - - - - | -65°C to +175°C |
| Maximum power dissipation ($P_D$) - - - - - | 200 mW |
| Lead temperature (soldering, 10 seconds)- | +300°C |
| Thermal resistance, junction-to-case- - - | (See MIL-M-38510, appendix C) |
| Junction temperature ($T_J$) - - - - - - - - | +175°C |

1.4 Recommended operating conditions.

| | |
|---|---|
| Supply voltage range ($V_{DD}$-$V_{SS}$)- - - - - - - | 4.5 V to 15 V |
| Low level input voltage range ($V_{IL}$) - - - - | 0-1.5 V dc @ $V_{DD}$ = 5 V dc, $V_{OL}$ = 10% $V_{DD}$, $V_{OH}$ = 90% $V_{DD}$, 0-4.0 V dc @ $V_{DD}$ = 15 V dc, 0-2.0 V dc @ $V_{DD}$ = 10 V dc |
| High level input voltage range ($V_{IH}$)- - - - | 3.5-5.0 V dc @ $V_{DD}$ = 5 V dc, $V_{OL}$ = 10% $V_{DD}$, $V_{OH}$ = 90% $V_{DD}$, 11.0-15.0 V dc @ $V_{DD}$ = 15 V dc, 8.0-10.0 V dc @ $V_{DD}$ = 10 V dc |
| Ambient operating temperature range ($T_A$)- - | -55°C to +125°C |

2. APPLICABLE DOCUMENTS

2.1 Government specifications and standards. Unless otherwise specified, the following specifications and standards, of the issue listed in that issue of the Department of Defense Index of Specifications and Standards specified in the solicitation, form a part of this specification to the extent specified herein.

SPECIFICATION

MILITARY

MIL-M-38510 - Microcircuits, General Specification for.

STANDARD

MILITARY

MIL-STD-883 - Test Methods and Procedures for Microelectronics.

(Copies of specifications, standards, handbooks, drawings, and publications required by manufacturers in connection with specific acquisition functions should be obtained from the contracting activity or as directed by the contracting officer.)

2.2 Order of precedence. In the event of a conflict between the text of this specification and the references cited herein, the text of this specification shall take precedence.

3. REQUIREMENTS

3.1 Detail specification. The individual item requirements shall be in accordance with MIL-M-38510, and as specified herein.

3.2 Design, construction, and physical dimensions. The design, construction, and physical dimensions shall be as specified in MIL-M-38510 and herein. Although eutectic die bonding is preferred, epoxy die bonding may be performed. However, the resin used shall be Dupont 5504 Conductive Silver Paste, or equivalent, which is cured at 200°C ±10°C for a minimum of 2 hours. The use of equivalent epoxies or cure cycles shall be approved by the qualifying activity. Equivalency shall be demonstrated in data submitted to the qualifying activity for verification.

3.2.1 Terminal connections. The terminal connections shall be as specified on figure 1.

3.2.2 Logic diagrams. The logic diagrams shall be as specified on figure 2.

3.2.3 Truth tables. The truth tables shall be as specified on figure 3.

3.2.4 Schematic circuits. The schematic circuits shall be submitted to the preparing activity prior to inclusion of a manufacturer's device in this specification and shall be submitted to the qualifying activity as a prerequisite for qualification. All qualified manufacturers' schematics shall be maintained and available upon request.

3.2.5 Case outline. The case outline shall be as specified in 1.2.3.

3.3 Lead material and finish. The lead material and finish shall be in accordance with MIL-M-38510 and 6.4 herein.

3.4 Electrical performance characteristics. Unless otherwise specified, the electrical performance characteristics are as specified in table I, and apply over the full recommended ambient operating temperature range.

3.5 Electrical test requirements. The electrical test requirements for each device class shall be the subgroups specified in table II. The electrical tests for each subgroup are described in table III.

3.6 Marking. Marking shall be in accordance with MIL-M-38510.

3.6.1. Total dose radiation hardness identifier. Total dose radiation hardness identifier shall be in accordance with MIL-M-38510 and 4.5.4 herein.

3.6.2 Serialization. All class S devices shall be serialized in accordance with MIL-M-38510.

3.6.3 Correctness of indexing and marking. All devices shall be subjected to the final electrical tests specified in table II after part number marking to verify that they are correctly indexed and identified by part number. Optionally, an approved electrical test may be devised especially for this requirement.

3.7 Microcircuit group assignment. The devices covered by this specification shall be in microcircuit group number 39 (see MIL-M-38510, appendix E).

4. QUALITY ASSURANCE PROVISIONS

4.1 Sampling and inspection. Sampling and inspection procedures shall be in accordance with MIL-M-38510 and methods 5005 and 5007, as applicable, of MIL-STD-883, except as modified herein.

4.2 Screening. Screening shall be in accordance with method 5004 of MIL-STD-883, and shall be conducted on all devices prior to qualification and quality conformance inspection. The following additional criteria shall apply:

a. Delete the sequence specified in 3.1.9 through 3.1.13 of method 5004 and substitute lines 1 through 7 of table II herein.

b. Burn-in (method 1015 of MIL-STD-883).

(1) Static tests (test condition A) using circuit shown on figure 4, or equivalent. Ambient temperature shall be 125°C minimum. Test duration for each static test shall be 24 hours minimum for class S devices and in accordance with table I of method 1015 for class B devices.

(2) Dynamic test (test condition D) using circuit shown on figure 5, or equivalent. Ambient temperature shall be 125°C minimum. Test duration shall be in accordance with table I of method 1015.

c. Interim and final electrical parameters shall be as specified in table II herein.

d. For class S devices, post dynamic burn-in, or class B devices, post static burn-in, electrical parameter measurements may, at the manufacturer's option, be performed separately or included in the final electrical parameter requirements.

4.2.1 Percent defective allowable (PDA).

a. The PDA for class S devices shall be 5 percent for static burn-in and 5 percent for dynamic burn-in, based on the exact number of devices submitted to each separate burn-in.

b. Static burn-in I and II the failures shall be cumulative for determining PDA.

c. The PDA for class B devices shall be in accordance with MIL-M-38510 for static burn-in. Dynamic burn-in is not required.

d. Those devices whose measured characteristics, after burn-in, exceed the specified delta ($\Delta$) limits or electrical parameter limits specified in table III, subgroup 1, are defective and shall be removed from the lot. The verified failures divided by the total number of devices in the lot initially submitted to burn-in shall be used to determine the percent defective for the lot and the lot shall be accepted or rejected based on the specified PDA.

4.3 Qualification inspection. Qualification inspection shall be in accordance with MIL-M-38510. Inspections to be performed shall be those specified in method 5005 of MIL-STD-883 and herein for groups A, B, C, D, and E inspections (see 4.4.1 through 4.4.5).

4.4 Quality conformance inspection. Quality conformance inspection shall be in accordance with MIL-M-38510 and as specified herein. Inspections to be performed shall be those specified in method 5005 of MIL-STD-883 and herein for groups A, B, C, D, and E inspections (see 4.4.1 through 4.4.5).

4.4.1 Group A inspection. Group A inspection shall be in accordance with table I of method 5005 of MIL-STD-883 and as follows:

a. Tests shall be performed in accordance with table II herein.

b. Subgroups 5, 6, 7, and 8 of table I of method 5005 of MIL-STD-883 shall be omitted.

c. Subgroup 4 ($C_i$ measurement) shall be measured only for initial qualification and after process or design changes which may affect input capacitance. Capacitance shall be measured between the designated terminal and $V_{SS}$ at a frequency of 1 MHz.

d. Subgroup 12 shall be added to the group A inspection requirements for class S devices using an LTPD of 15 and consist of the procedures, test conditions, and limits specified in table III.

4.4.2 Group B inspection. Group B inspection shall be in accordance with table II of method 5005 of MIL-STD-883 and as follows:

a. Class S steady state life (accelerated) test circuits shall be submitted to the qualifying activity for approval. When the alternate steady state life test is used, the circuit on figure 5, or equivalent, shall be used.

b. A special subgroup shall be added using an LTPD of 15 for classes S and B, and shall be measured only for initial qualification and after process or design changes. This subgroup shall consist of a high voltage test of the input protection circuits, $V_{ZAP}$ (see 4.5.3).

c. End-point electrical parameters shall be as specified in table II herein and shall consist only of those subgroups specified in table IIa of test method 5005 of MIL-STD-883, and table II herein. Delta limits shall apply only to subgroup 5 of group B inspections and shall consist of tests specified in table IV herein.

TABLE I. Electrical performance characteristics.

| Test | Symbol | Conditions $V_{SS}$ = 0 V, -55°C ≤ $T_A$ ≤ 125°C, Unless otherwise specified | Device type | Limits Min | Limits Max | Unit |
|---|---|---|---|---|---|---|
| Positive clamping input to $V_{DD}$ | $V_{IC(pos)}$ | $T_A$ = 25°C, $V_{DD}$ = GND, $V_{SS}$ = Open, Output = Open, $I_{IN}$ = 1 mA | All | --- | 1.5 | Vdc |
| Negative clamping input to $V_{SS}$ | $V_{IC(neg)}$ | $T_A$ = 25°C, $V_{DD}$ = Open, $V_{SS}$ = GND, Output = Open, $I_{IN}$ = -1 mA | All | --- | -6.0 | Vdc |
| Quiescent supply current | $I_{SS}$ or $I_{DD}$ | $V_{DD}$ = 18.0 Vdc, $V_{IN}$ = $V_{SS}$ or $V_{DD}$, All input combinations | All | --- | -2.5 | µA |
| High-level output voltage | $V_{OH1}$ | $V_{DD}$ = 15.0 Vdc, See table III, $\|I_O\|$ ≤ 1 µA | All | 14.95 | --- | Vdc |
| Low-level output voltage | $V_{OL1}$ | $V_{DD}$ = 15.0 Vdc, See table III, $\|I_O\|$ ≤ 1 µA | All | --- | 0.05 | Vdc |
| 3-state output leakage current | $I_{OC1}$ | $V_{DD}$ = 18.0 Vdc, Measure outputs sequentially, $V_O$ = $V_{DD}$ | 03 | --- | 100 | nA |
| | $I_{OC2}$ | $V_{DD}$ = 18.0 Vdc, Measure outputs sequentially, $V_O$ = $V_{SS}$ | 03 | --- | -100 | nA |
| Input high voltage | $V_{IH1}$ | $V_{DD}$ = 5.0 Vdc, See table III, $\|I_O\|$ ≤ 1 µA | All | 4.5 | --- | Vdc |
| | $V_{IH2}$ | $V_{DD}$ = 10.0 Vdc, See table III, $\|I_O\|$ ≤ 1 µA | All | 9.0 | --- | Vdc |
| | $V_{IH3}$ | $V_{DD}$ = 15.0 Vdc, See table III, $\|I_O\|$ ≤ 1 µA | All | 13.5 | --- | Vdc |
| Input low voltage | $V_{IL1}$ | $V_{DD}$ = 5.0 Vdc, See table III, $\|I_O\|$ ≤ 1 µA | All | --- | 0.5 | Vdc |
| | $V_{IL2}$ | $V_{DD}$ = 10.0 Vdc, See table III, $\|I_O\|$ ≤ 1 µA | All | --- | 1.0 | Vdc |
| | $V_{IL3}$ | $V_{DD}$ = 15.0 Vdc, See table III, $\|I_O\|$ ≤ 1 µA | All | --- | 1.5 | Vdc |

TABLE I. Electrical performance characteristics -Continued.

| Test | Symbol | Conditions $V_{SS}$ = 0 V, -55°C ≤ $T_A$ ≤ 125°C, Unless otherwise specified | Device type | Limits Min | Limits Max | Unit |
|---|---|---|---|---|---|---|
| Output high (source) current | $I_{OH1}$ | $V_{DD}$ = 5.0 Vdc, $V_{IN}$ = $V_{DD}$, $V_{OH}$ = 4.6 Vdc | 03 | -0.36 | --- | mAdc |
| | $I_{OH2}$ | $V_{DD}$ = 15.0 Vdc, $V_{IN}$ = $V_{DD}$, $V_{OH}$ = 13.5 Vdc | 03 | -2.4 | --- | mAdc |
| Output low (sink) current | $I_{OL1}$ | $V_{DD}$ = 5.0 Vdc, $V_{IN}$ = GND, $V_{OL}$ = 0.4 Vdc | 03 | 0.36 | --- | mAdc |
| | $I_{OL2}$ | $V_{DD}$ = 15.0 Vdc, $V_{IN}$ = GND, $V_{OL}$ = 1.5 Vdc | 03 | 2.4 | --- | mAdc |
| Input leakage current 1/ | $I_{IH}$ | $V_{DD}$ = 18.0 Vdc, Measure inputs sequentially connect all unused inputs to $V_{DD}$ or $V_{SS}$ | All | --- | 45 | nA |
| | $I_{IL}$ | $V_{DD}$ = 18.0 Vdc, Measure inputs sequentially connect all unused inputs to $V_{DD}$ or $V_{SS}$ | All | --- | -45 | nA |
| Switch "on" resistance | $R_{ON1}$ | $V_{DD}$ = 2.5 V, $V_{SS}$ = -2.5 V, See table III | 01,02 | --- | 900 | Ω |
| | $R_{ON2}$ | $V_{DD}$ = 5.0 V, $V_{SS}$ = -5.0 V, See table III | 01,02 | --- | 325 | Ω |
| | $R_{ON3}$ | $V_{DD}$ = 7.5 V, $V_{SS}$ = -7.5 V, See table III | 01,02 | --- | 230 | Ω |
| Input, control, output, feedthrough capacitance | $C_C$ | $V_{DD}$ = 0 Vdc, f = 1 MHz, $T_A$ = 25°C (see table III) | All | --- | 7.5 | pF |
| | $C_{IS}$ | | 01,02 | --- | 7.5 | pF |
| | $C_{IOS}$ | | 01,02 | --- | 0.4 | pF |
| | $C_{OS}$ | | 01 | --- | 75 | pF |
| | | | 02 | --- | 50 | pF |
| Switch leakage current | $I_{DOFF1}$ | $V_{DD}$ = 5.0 Vdc | 01,02 | --- | ±100 | mA |
| | $I_{DOFF2}$ | $V_{DD}$ = 10.0 Vdc | 01,02 | --- | ±200 | mA |
| | $I_{DOFF3}$ | $V_{DD}$ = 15.0 Vdc | 01,02 | --- | ±500 | mA |
| Propagation delay times: 0/I to I/0 | $t_{PLH1}$, $t_{PHL1}$ | $V_{DD}$ = 5.0 Vdc, $C_L$ = 50 pF, $R_L$ = 10 kΩ (see figures 10 and 11) | 01,02 | 3 | 77 | ns |

1/ Input current of one input node.

TABLE I. Electrical performance characteristics -Continued.

| Test | Symbol | Conditions $V_{SS}$ = 0 V, -55°C ≤ $T_A$ ≤ 125°C, Unless otherwise specified | Device type | Limits Min | Limits Max | Unit |
|---|---|---|---|---|---|---|
| Propagation delay times: Data input to output | $t_{PLH1}$, $t_{PHL1}$ | $V_{DD}$ = 5.0 Vdc, $C_L$ = 50 pF, $R_L$ = 200 kΩ (see figure 16) | 03 | 15 | 420 | ns |
| Propagation delay times: Control inputs to I/O | | $V_{DD}$ = 5.0 Vdc, $C_L$ = 50 pF, $R_L$ = 10 kΩ (see figures 12 and 13) | | | | |
| Low to high level | $t_{PLH2}$ | | 01,02 | 30 | 830 | ns |
| High to low level | $t_{PHL2}$ | | 01,02 | 20 | 560 | ns |
| Propagation delay times: Input select to output | $t_{PLH2}$, $t_{PHL2}$ | $V_{DD}$ = 5.0 Vdc, $C_L$ = 50 pF, $R_L$ = 200 kΩ (see figure 17) | 03 | 18 | 490 | ns |
| Propagation delay times: Inhibit to I/O | | $V_{DD}$ = 5.0 Vdc, $C_L$ = 50 pF, $R_L$ = 10 kΩ (see figures 14 and 15) | | | | |
| Low to high level | $t_{PLH3}$ | | 01,02 | 30 | 830 | ns |
| High to low level | $t_{PHL3}$ | | 01,02 | 20 | 560 | ns |
| 3-state delay times: | | $V_{DD}$ = 5.0 Vdc, $C_L$ = 50 pF, $R_L$ = 1 kΩ (see figure 18) | | | | |
| Output high to high impedance | $t_{PHZ}$ | | 03 | 9 | 250 | ns |
| High impedance to output high | $t_{PZH}$ | | 03 | 9 | 250 | ns |
| High impedance to output low | $t_{PZL}$ | | 03 | 9 | 250 | ns |
| Output low to high impedance | $t_{PLZ}$ | | 03 | 9 | 250 | ns |
| Transition times | $t_{THL}$, $t_{TLH}$ | $V_{DD}$ = 5.0 Vdc, $C_L$ = 50 pF, $R_L$ = 200 kΩ (see figure 16) | 03 | 10 | 280 | ns |
| Propagation delay times: O/I to I/O | $t_{PLH1}$, $t_{PHL1}$ | $V_{DD}$ = 10.0 Vdc, $T_A$ = 25°C, $R_L$ = 10 kΩ, $C_L$ = 50 pF (see figures 10 and 11) | 01,02 | 1 | 25 | ns |
| Propagation delay times: Data input to output | $t_{PLH1}$ $t_{PHL1}$ | $V_{DD}$ = 10.0 Vdc, $T_A$ = 25°C, $R_L$ = 200 kΩ, $C_L$ = 50 pF (see figure 16) | 03 | 7 | 140 | ns |

TABLE I. Electrical performance characteristics -Continued.

| Test | Symbol | Conditions $V_{SS}$ = 0 V, -55°C ≤ $T_A$ ≤ 125°C, Unless otherwise specified | Device type | Limits Min | Limits Max | Unit |
|---|---|---|---|---|---|---|
| Propagation delay times: Control inputs to I/O | | $V_{DD}$ = 10.0 Vdc, $T_A$ = 25°C, $R_L$ = 10 kΩ, $C_L$ = 50 pF (see figures 12 and 13) | | | | |
| Low to high level | $t_{PLH2}$ | | 01,02 | 13 | 250 | ns |
| High to low level | $t_{PHL2}$ | | 01,02 | 8 | 150 | ns |
| Propagation delay times: Input select to output | $t_{PLH2}$, $t_{PHL2}$ | $V_{DD}$ = 10.0 Vdc, $T_A$ = 25°C, $R_L$ = 200 kΩ, $C_L$ = 50 pF (see figure 17) | 03 | 8 | 170 | ns |
| Propagation delay times: Inhibit to I/O | | $V_{DD}$ = 10.0 Vdc, $T_A$ = 25°C, $R_L$ = 10 kΩ, $C_L$ = 50 pF (see figures 14 and 15) | | | | |
| Low to high level | $t_{PLH3}$ | | 01,02 | 13 | 250 | ns |
| High to low level | $t_{PHL3}$ | | 01,02 | 8 | 150 | ns |
| 3-state delay times: Output high to high impedance | $t_{PHZ}$ | $V_{DD}$ = 10.0 Vdc, $T_A$ = 25°C, $R_L$ = 1 kΩ, $C_L$ = 50 pF (see figure 18) | 03 | 5 | 100 | ns |
| High impedance to output high | $t_{PZH}$ | | 03 | 5 | 100 | ns |
| High impedance to low output | $t_{PZL}$ | | 03 | 5 | 100 | ns |
| Low output to high impedance | $t_{PLZ}$ | | 03 | 5 | 100 | ns |
| Transition times | $t_{THL}$, $t_{TLH}$ | $V_{DD}$ = 10.0 Vdc, $T_A$ = 25°C, $R_L$ = 200 kΩ, $C_L$ = 50 pF (see figure 16) | 03 | 5 | 100 | ns |
| Input test voltage | $V_{ZAP}$ | $C_1$ = 100 pF, $R_z$ = 1.5 kΩ (see 4.5.3) | All | 400 | --- | V |

TABLE II. Burn-in and electrical test requirements.

| Line no. | Applicable tests and MIL-STD-883 test methods | Class S device 3/ | | | | Class B devices 3/ | | | |
|---|---|---|---|---|---|---|---|---|---|
| | | Ref. par. | Table 2/ III sub-groups | Table 1/ IV delta limits | Test circuit figure | Ref. par. | Table 2/ III sub-groups | Table 1/ IV delta limits | Test circuit figure |
| 1 | Interim electrical parameters (method 5004) | | 1 | | | | 1 | | |
| 2 | Static burn-in I (method 1015) | 4.2b. 4.5.2 | | | 9 | 4.2b. 4.5.2 | 4/ | | 4 |
| 3 | Same as line 1 | | 1* | Δ | | 4.2d. | 1* | Δ | |
| 4 | Dynamic burn-in (method 1015) | 4.2b. 4.5.2 | | | 5 | | | | |
| 5 | Same as line 1 | 4.2.d. | 1* | Δ | | | | | |
| 6 | Final electrical parameters (method 5004) | | 1*,2,3,9 | | | | 1*,2,3,9 | | |
| 7 | Group A test requirements (method 5005) | 4.4.1 | 1,2,3,4, 9,10,11, 12 | | | 4.4.1 | 1,2,3, 4,9 | | |
| 8 | Group B end-point parameters (method 5005) | 4.4.2 | 1,2,3, 9,10,11 | Δ | | | | | |
| 9 | Group C end point electrical parametrs (method 5005) | | | | | 4.4.3 | 1,2,3 | Δ | |
| 10 | Additional group C tests, (method 5005) | | | | | 4.4.3c | 10,11 | | |
| 13 | Group D end-point electrical parameters (method 5005) | 4.4.4 | 1,2,3 | | | 4.4.4 | 1,2,3 | | |

1/ (Δ) indicates delta limit shall be required only on table III subgroup 1 where specified, and delta values shall be computed with reference to the previous interim electrical parameters.

2/ (*) indicates PDA applied to subgroup 1 (see 4.2.1).

3/ Blank spaces indicate tests are not applicable.

4/ The device manufacturer may at his option either perform delta measurements orwithin 24 hours after burn-in (or removal of bias) perform the final electrical parameter measurements.

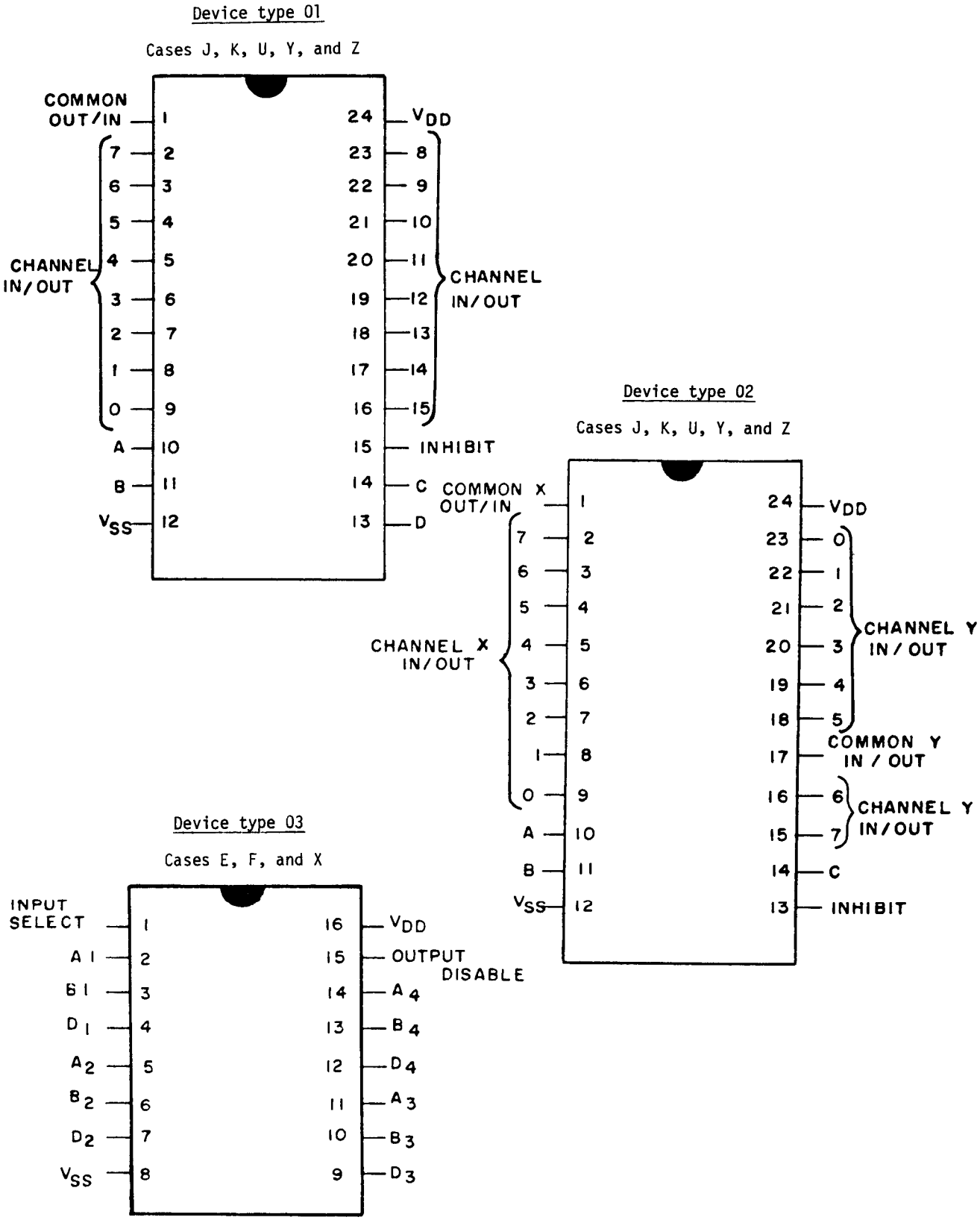


FIGURE 1. Terminal connections.

Device type 01

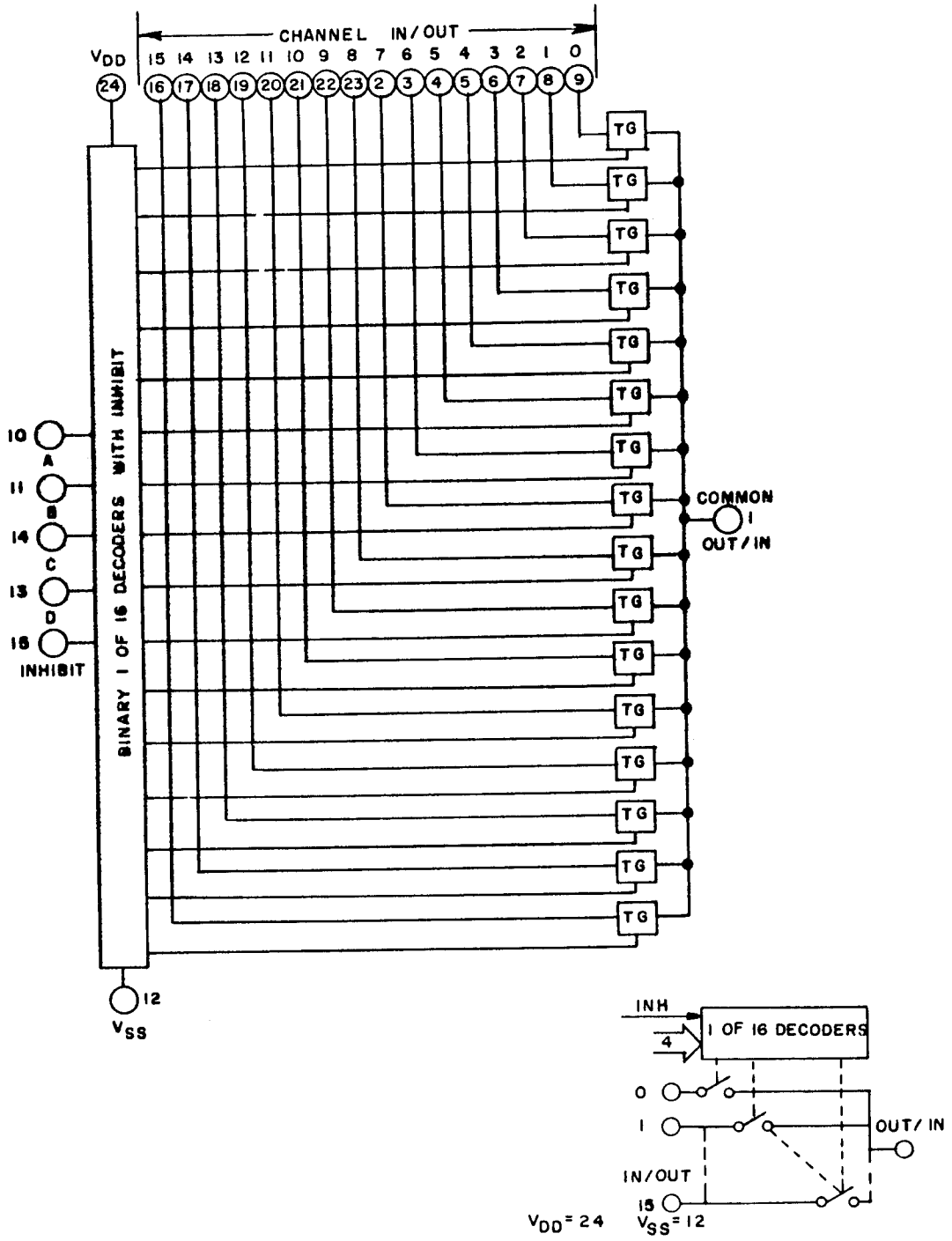


FIGURE 2. Logic diagrams.

Device type 02

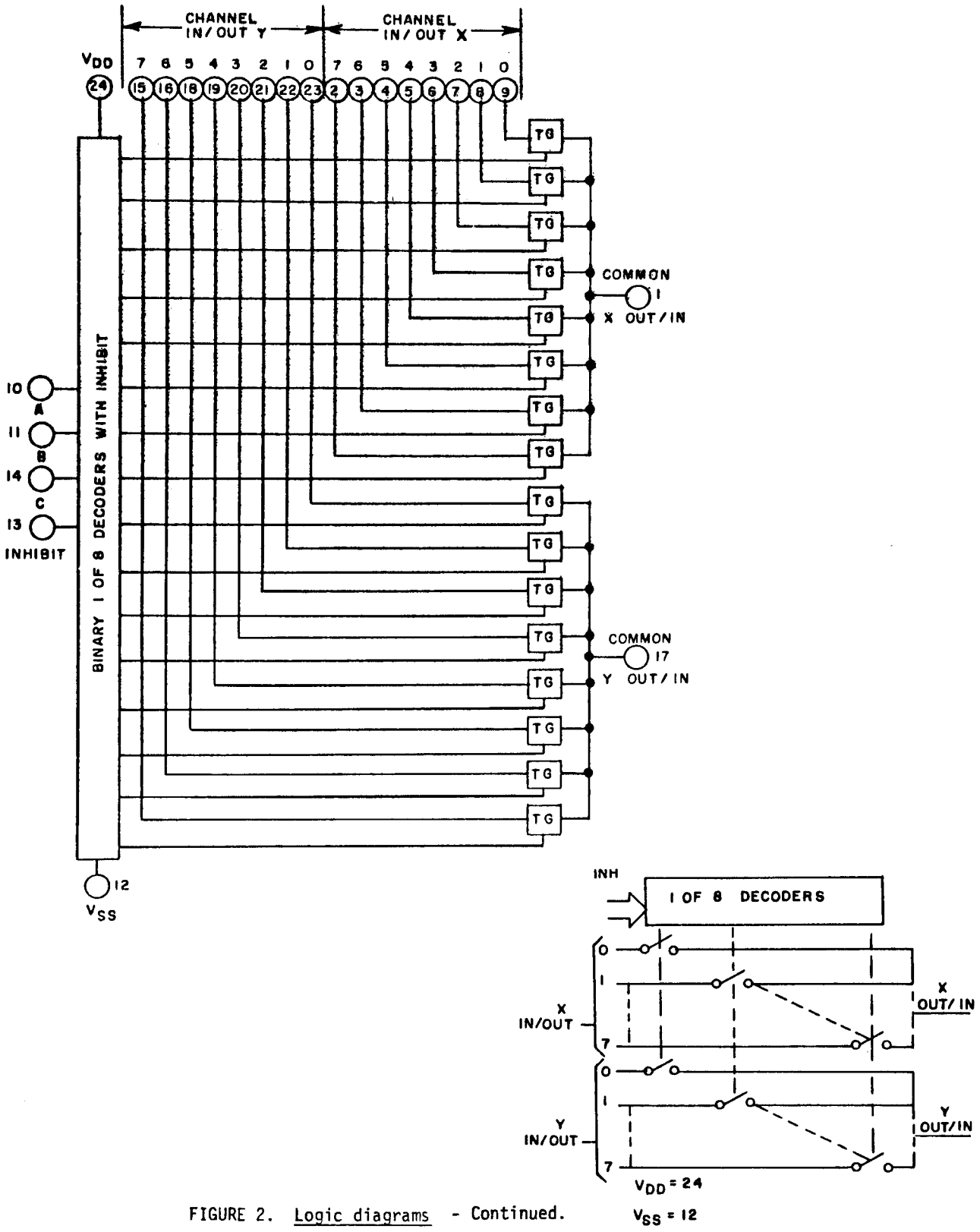


FIGURE 2. Logic diagrams - Continued.

Device type 03

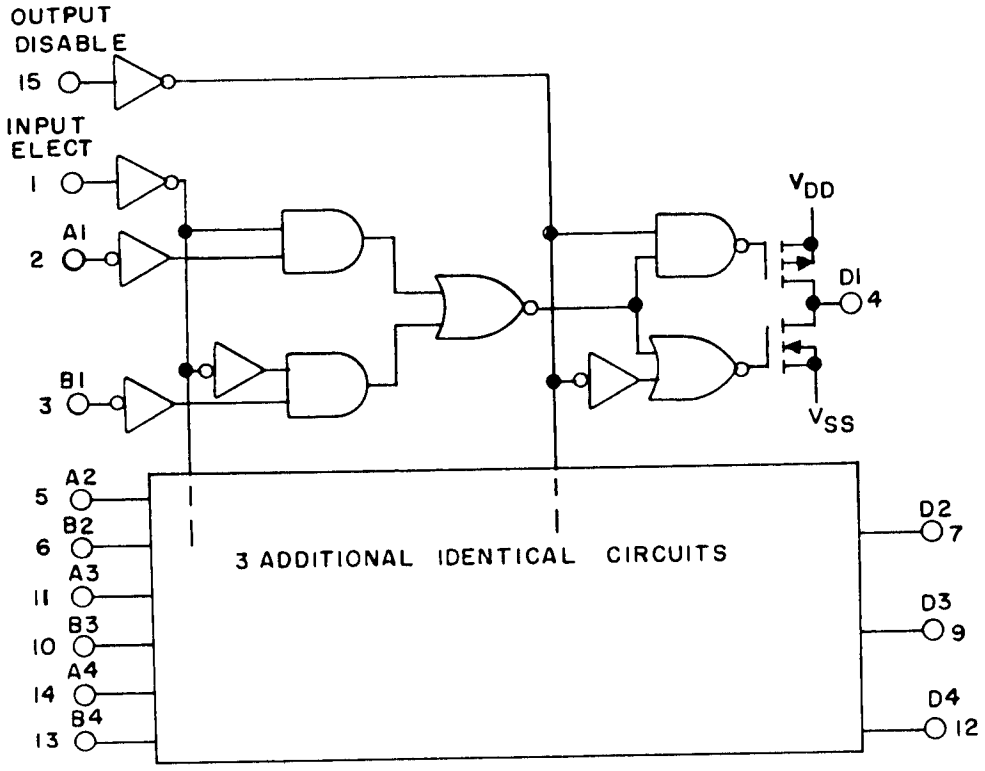


FIGURE 2. Logic diagrams - Continued.

Device type 01

| A | B | C | D | INH | SELECTED CHANNEL |
|---|---|---|---|---|---|
| X | X | X | X | 1 | None |
| 0 | 0 | 0 | 0 | 0 | 0 |
| 1 | 0 | 0 | 0 | 0 | 1 |
| 0 | 1 | 0 | 0 | 0 | 2 |
| 1 | 1 | 0 | 0 | 0 | 3 |
| 0 | 0 | 1 | 0 | 0 | 4 |
| 1 | 0 | 1 | 0 | 0 | 5 |
| 0 | 1 | 1 | 0 | 0 | 6 |
| 1 | 1 | 1 | 0 | 0 | 7 |
| 0 | 0 | 0 | 1 | 0 | 8 |
| 1 | 0 | 0 | 1 | 0 | 9 |
| 0 | 1 | 0 | 1 | 0 | 10 |
| 1 | 1 | 0 | 1 | 0 | 11 |
| 0 | 0 | 1 | 1 | 0 | 12 |
| 1 | 0 | 1 | 1 | 0 | 13 |
| 0 | 1 | 1 | 1 | 0 | 14 |
| 1 | 1 | 1 | 1 | 0 | 15 |

Device type 02

| A | B | C | INH | SELECTED CHANNEL |
|---|---|---|---|---|
| X | X | X | 1 | None |
| 0 | 0 | 0 | 0 | 0X, 0Y |
| 1 | 0 | 0 | 0 | 1X, 1Y |
| 0 | 1 | 0 | 0 | 2X, 2Y |
| 1 | 1 | 0 | 0 | 3X, 3Y |
| 0 | 0 | 1 | 0 | 4X, 4Y |
| 1 | 0 | 1 | 0 | 5X, 5Y |
| 0 | 1 | 1 | 0 | 6X, 6Y |
| 1 | 1 | 1 | 0 | 7X, 7Y |

X = DON'T CARE

LOGIC 0 = LOW

LOGIC 1 = HIGH

Z = HIGH IMPEDANCE

Device type 03

| INPUTS | | | | OUTPUT |
|---|---|---|---|---|
| 3 - STATE OUTPUT DISABLE | SELECT | A | B | D |
| 1 | X | X | X | Z |
| 0 | 0 | 0 | X | 0 |
| 0 | 0 | 1 | X | 1 |
| 0 | 1 | X | 0 | 0 |
| 0 | 1 | X | 1 | 1 |

FIGURE 3. Truth tables.

Device type 01

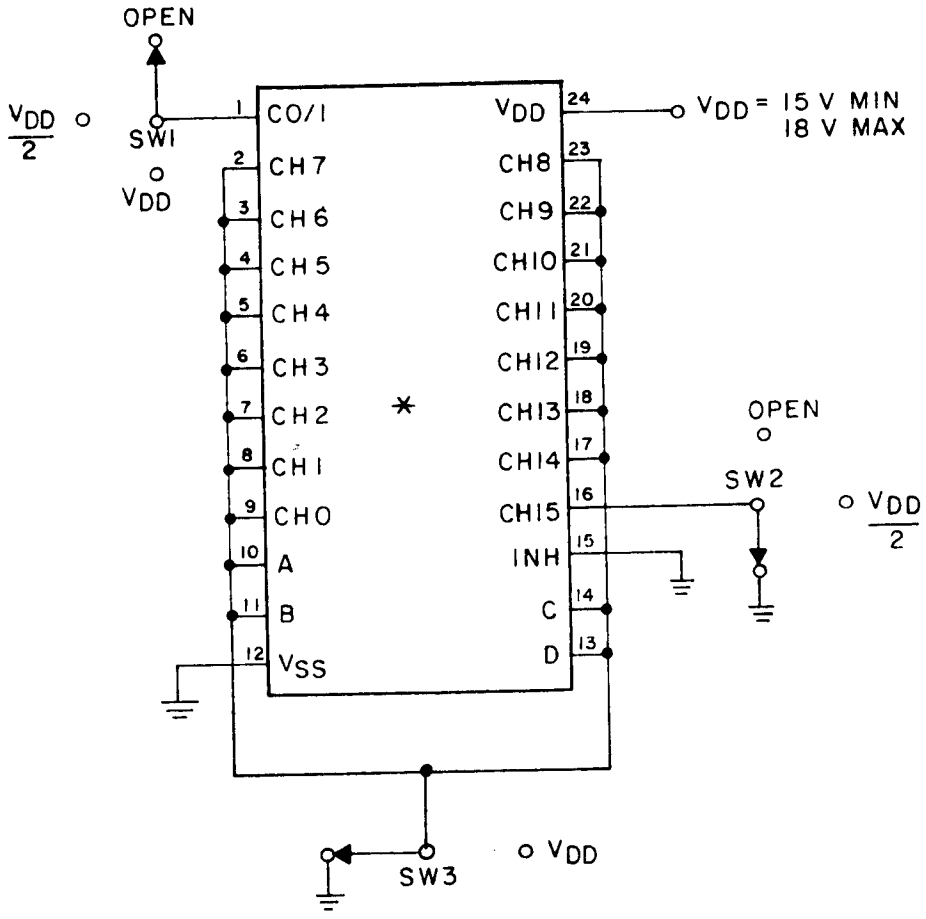


* SEE NOTE 3

NOTES:
1. For static burn-in I, connect the switches as follows: Switch 1 = open or $V_{DD}/2$, switch 2 = GND, switch 3 = GND.
2. For static burn-in II, connect the switches as follows: Switch 1 = $V_{DD}$, switch 2 = open or $V_{DD}/2$, switch 3 = $V_{DD}$.
3. Except for $V_{DD}$ and $V_{SS}$, each terminal shall be connected through a resistor whose value is 2 kΩ to 47 kΩ. The actual measured value of the resistor selected shall not exceed ±20% of its branded value due to use, heat, or age.

FIGURE 4. Static burn-in tests.

Device type 02

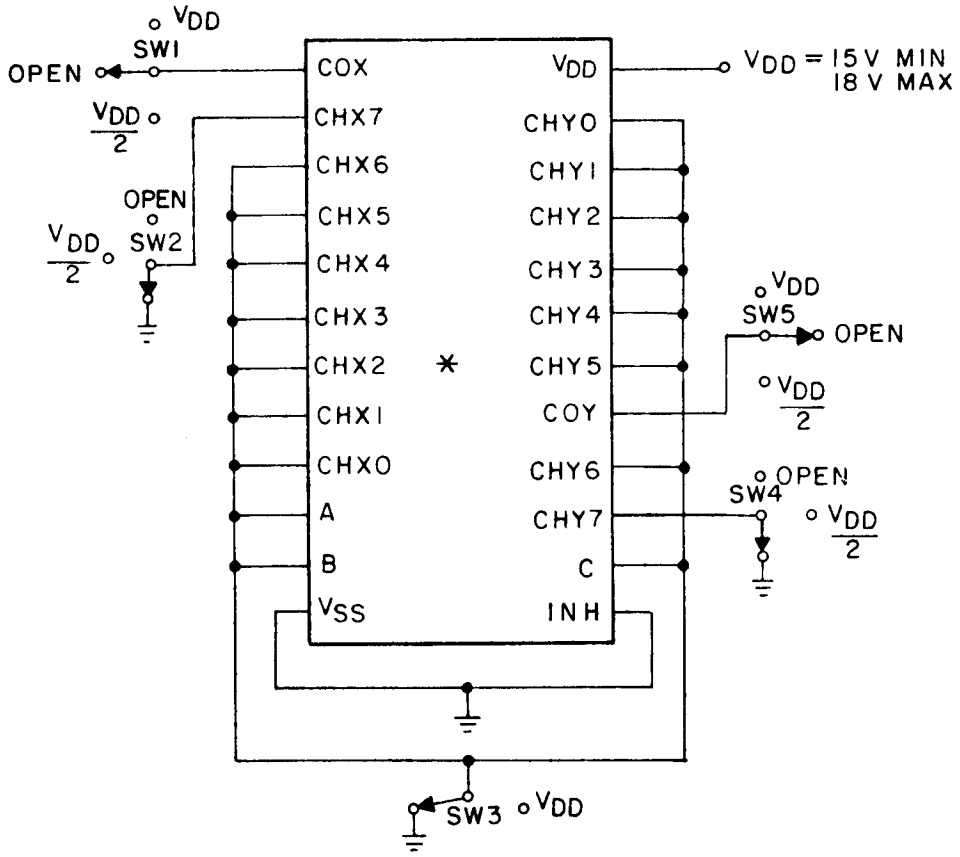


* SEE NOTE 3

NOTES:
1. For static burn-in I, connect the switches as follows: Switches 1 and 5 = open or $V_{DD/2}$, switches 2, 3 and 4 = GND.
2. For static burn-in II, connect the switches as follows: Switches 1, 3 and 5 = $V_{DD}$, switches 2 and 4 = open or $V_{DD/2}$.
3. Except for $V_{DD}$ and $V_{SS}$, each terminal shall be connected directly to $V_{DD}$ or $V_{SS}$, or through a resistor whose value is 2 kΩ to 47 kΩ. The actual measured value of the resistor selected shall not exceed ±20% of its branded value due to use, heat, or age.

FIGURE 4. Static burn-in tests - Continued.

Device type 03

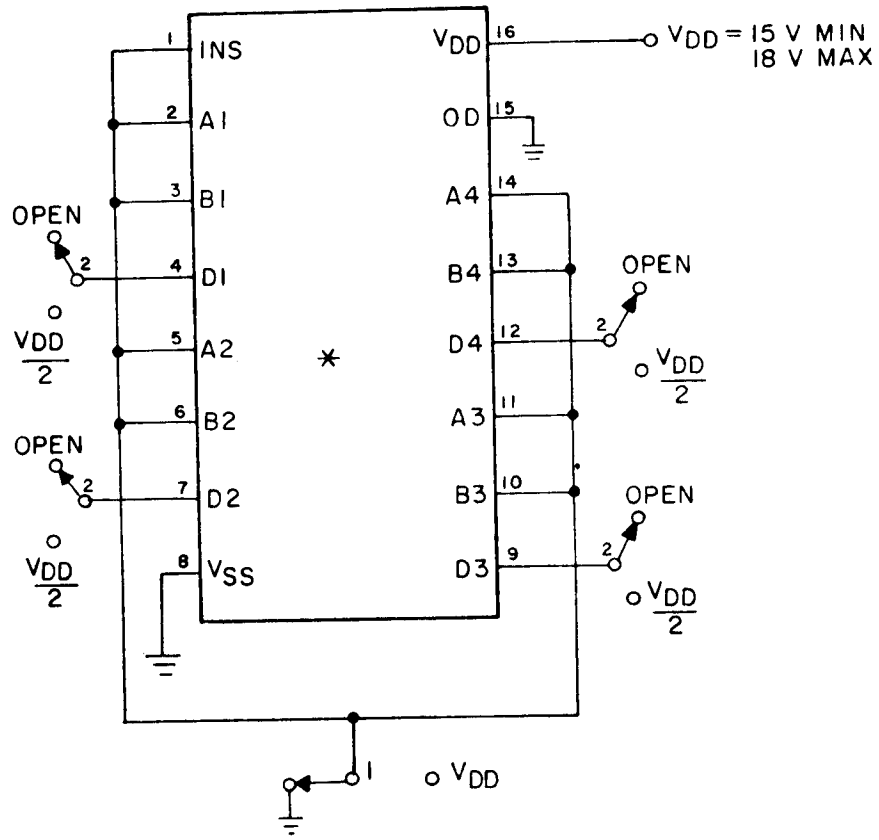


* SEE NOTE 3

NOTES:
1. For static burn-in I, all inputs are connected to 0 volts, switch position 1.
2. For static burn-in II, all inputs are connected to $V_{DD}$, switch position 2.
3. Except for $V_{DD}$ and $V_{SS}$, each terminal shall be connected through a resistor whose value is 2 kΩ to 47 kΩ. The actual measured value of the resistor selected shall not exeed ±20% of its branded value due to use, heat or age.
4. Output may be in switch position 1 or 2.
5. $V_{DD/2} = V_{DD/2} \pm 1.0$ V.

FIGURE 4. Static burn-in tests - Continued.

Device type 01

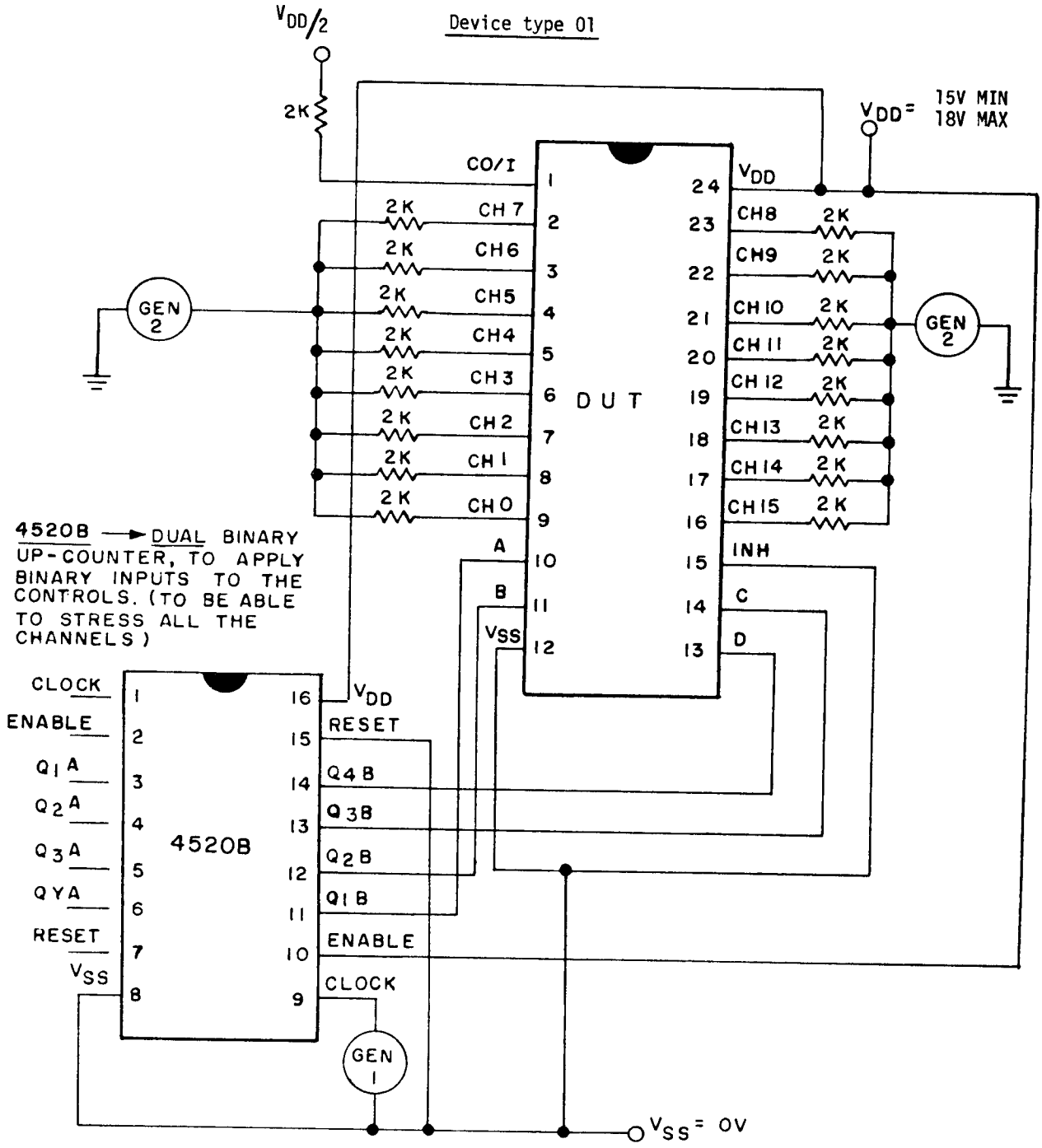


NOTES:

1. Except for $V_{DD}$ and $V_{SS}$, each terminal shall be connected through a resistor whose value is 2 kΩ to 47 kΩ. The actual measured value of the resistor selected shall not exceed ±20% of its branded value due to use, heat or age.
2. Input signal requirements:
   a. Square wave, 50% duty cycle.
   b. 25 kHz < PRR < 1 MHz.
   c. $t_{TLH}$ and $t_{THL}$ < 1 µs.
   d. Voltage level:
      Minimum = $V_{SS}$ -0.5 V, +10% $V_{DD}$.
      Maximum = $V_{DD}$ +0.5, -10% $V_{DD}$.

FIGURE 5. Dynamic burn-in and steady state life test circuits.

Device type 02

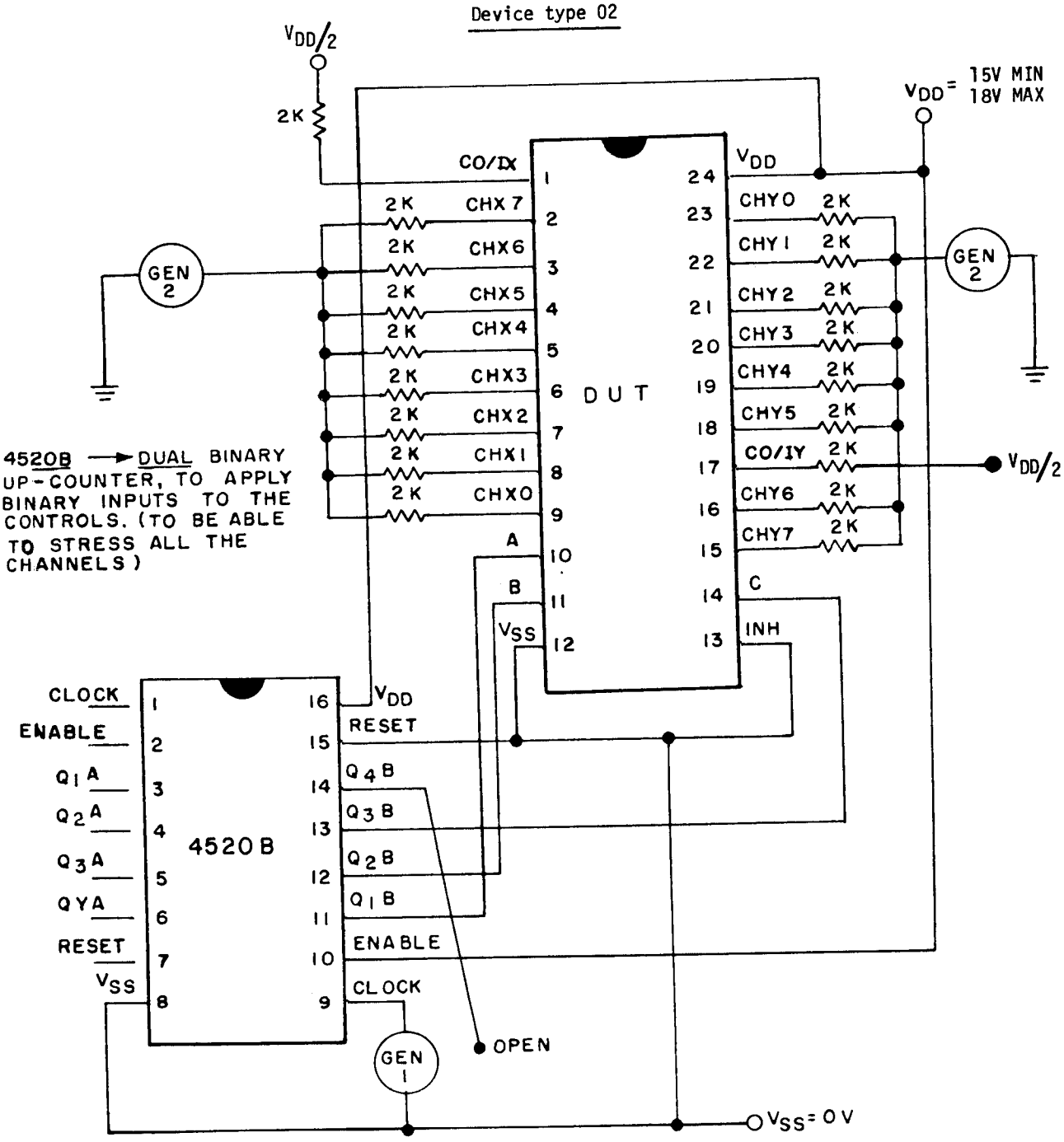


NOTES:

1. Except for $V_{DD}$ and $V_{SS}$, each terminal shall be connected through a resistor whose value is 2 kΩ to 47 kΩ. The actual measured value of the resistor selected shall not exceed ±20% of its branded value due to use, heat or age.
2. Input signal requirements:
   a. Square wave, 50% duty cycle.
   b. 25 kHz < PRR < 1 MHz.
   c. $t_{TLH}$ and $t_{THL}$ < 1 μs.
   d. Voltage level:
      Minimum = $V_{SS}$ -0.5 V, +10% $V_{DD}$.
      Maximum = $V_{DD}$ +0.5, -10% $V_{DD}$.

FIGURE 5. Dynamic burn-in and steady state life test circuits - Continued.

Device type 03

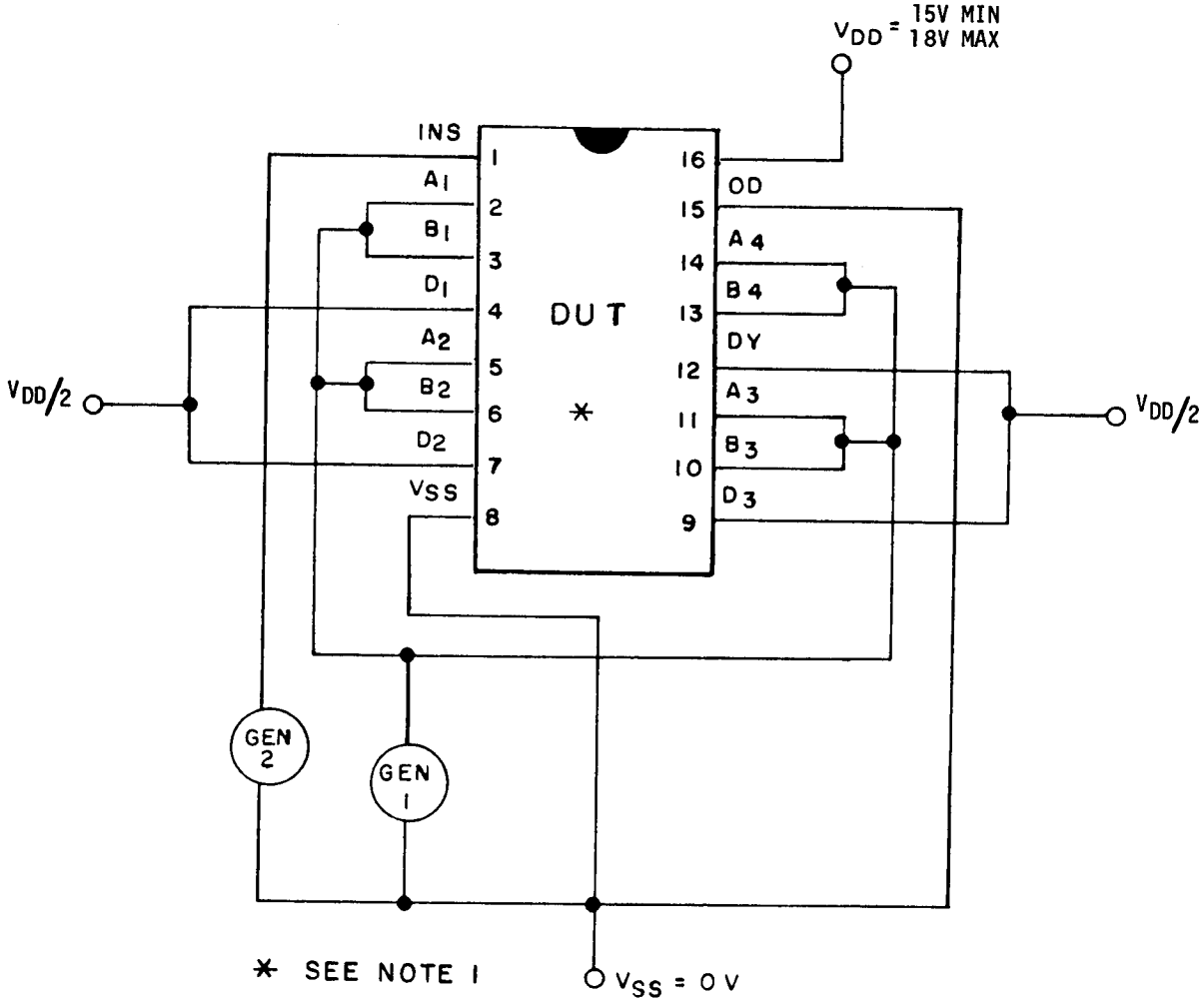


NOTES:

1. Except for $V_{DD}$ and $V_{SS}$, each terminal shall be connected through a resistor whose value is 2 kΩ to 47 kΩ. The actual measured value of the resistor selected shall not exceed ±20% of its branded value due to use, heat or age.
2. Input signal requirements:
   a. Square wave, 50% duty cycle.
   b. 25 kHz < PRR < 1 MHz.
   c. $t_{TLH}$ and $t_{THL}$ < 1 µs.
   d. Voltage level:
      Minimum = $V_{SS}$ -0.5 V, +10% $V_{DD}$.
      Maximum = $V_{DD}$ +0.5, -10% $V_{DD}$.
3. Generators 1 and 2 should have frequencies which are dissonant and free-running with respect with each other.

FIGURE 5. Dynamic burn-in and steady state life test circuits. - Continued.

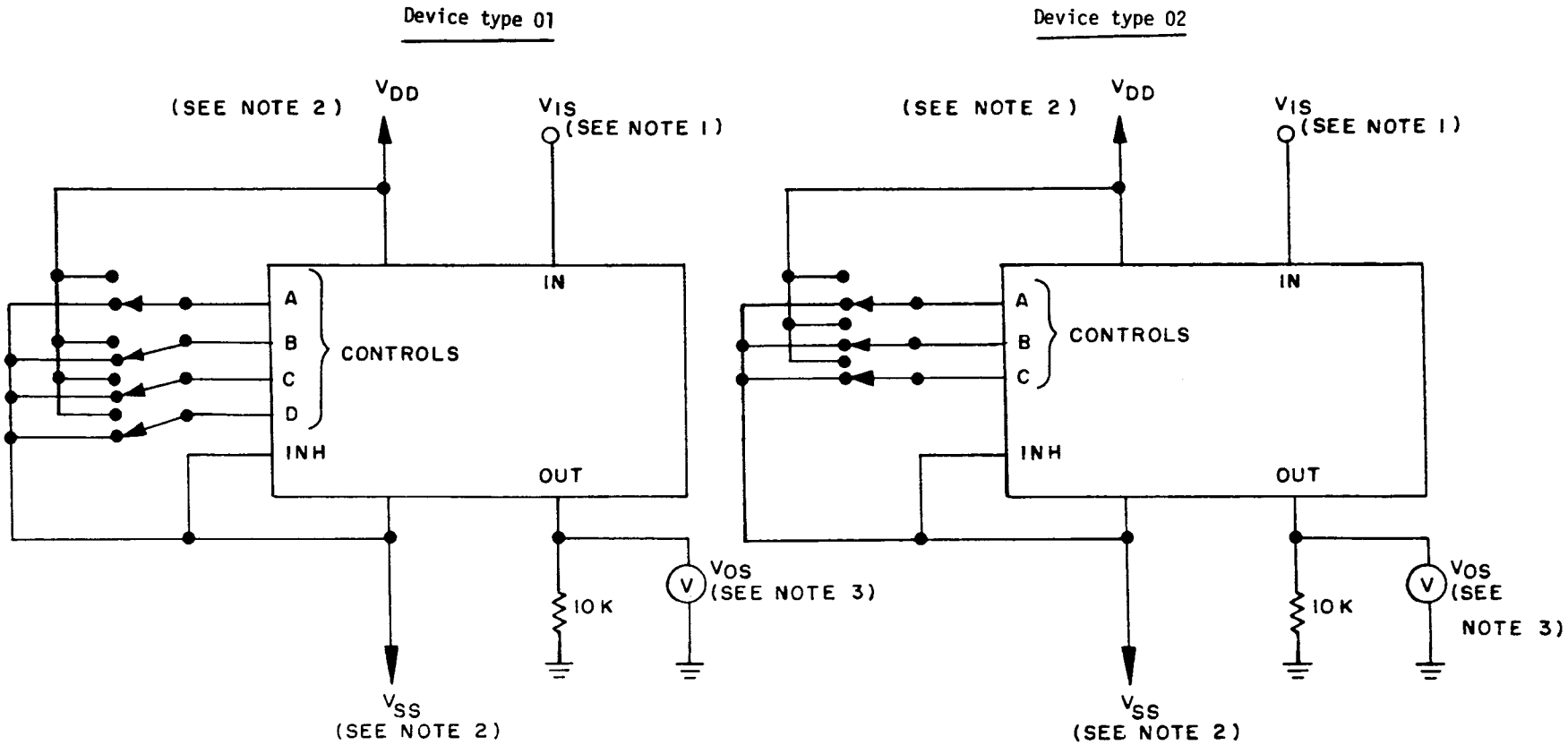


NOTES:

| | $R_{ON1}$ number | $R_{ON1}$ (1) | $R_{ON1}$ (2) | $R_{ON1}$ (3) | $R_{ON1}$ (4) |
|---|---|---|---|---|---|
| 1. | $V_{IS}$ | -2.0 V | -0.9 V | +1.0 V | +2.0 V |

2. Conditions $V_{DD}$ $V_{SS}$: $V_{DD}$ = 2.5 V, $V_{SS}$ =-2.5 V
3. Translation from $V_{OS}$ to $R_{ON}$:

$$R_{ON} = \frac{VIS - VOS}{VOS/10\ k\Omega}$$

4. See table III for complete terminal conditions.

FIGURE 6. ON resistance test.

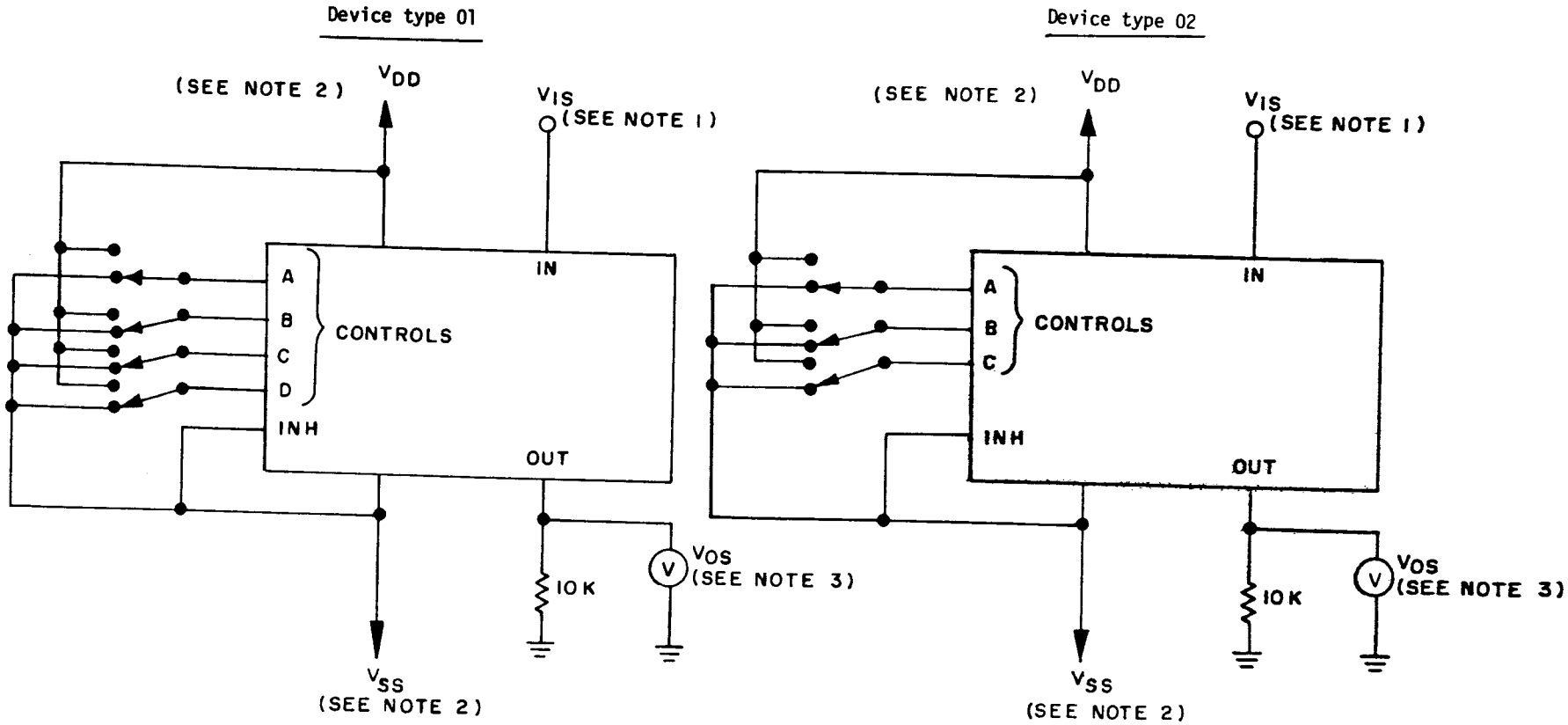


NOTES:

| | $R_{ON2}$ number | $R_{ON2}$ (1) | $R_{ON2}$ (2) | $R_{ON2}$ (3) | $R_{ON2}$ (4) |
|---|---|---|---|---|---|
| 1. | $V_{IS}$ | -5.0 V | -3.0 V | +3.5 V | +5.0 V |

2. Conditions $V_{DD}$ and $V_{SS}$: $V_{DD}$ = 5 V, $V_{SS}$ = -5V

3. Translation from $V_{OS}$ to $R_{ON}$:

$$R_{ON} = \frac{VIS-VOS}{VOS/10\ k\Omega}$$

4. See table III for complete terminal conditions.

FIGURE 7. On resistance test.

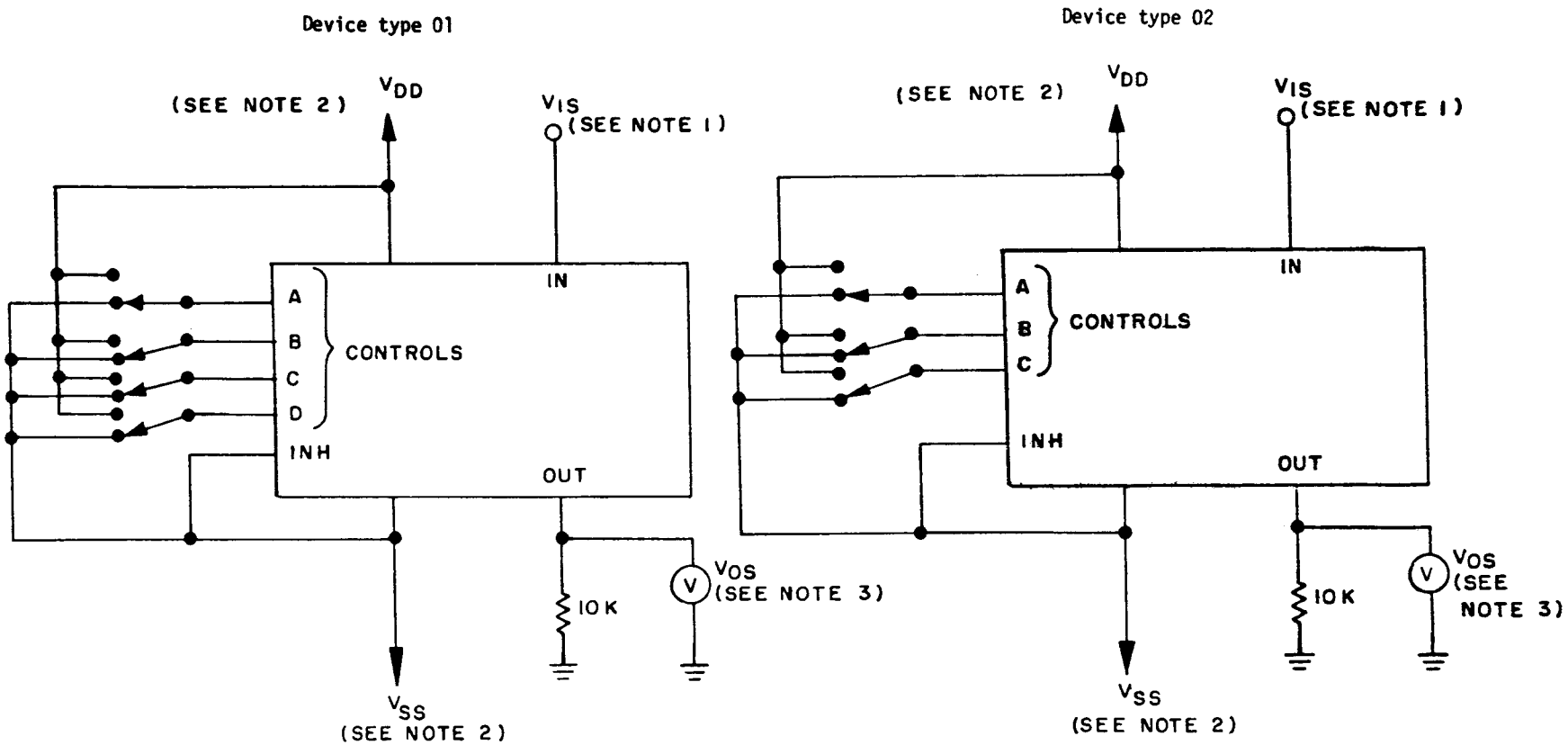


NOTES:

| $R_{ON3}$ number | $R_{ON3}$ (1) | $R_{ON3}$ (2) | $R_{ON3}$ (3) | $R_{ON3}$ (4) | $R_{ON3}$ (5) |
|---|---|---|---|---|---|
| $V_{IS}$ | -7.5 V | -5.0V | 0V | +6.0 V | +7.5 V |

1.

2. Conditions $V_{DD}$ and $V_{SS}$: $V_{DD}$ = 7.5 V, $V_{SS}$ = -7.5 V

3. Translation from $V_{OS}$ to $R_{ON}$:

$$R_{ON} = \frac{VIS - VOS}{VOS/10\ k\Omega}$$

4. See table III for complete terminal conditions.

FIGURE 8. ON resistance test.

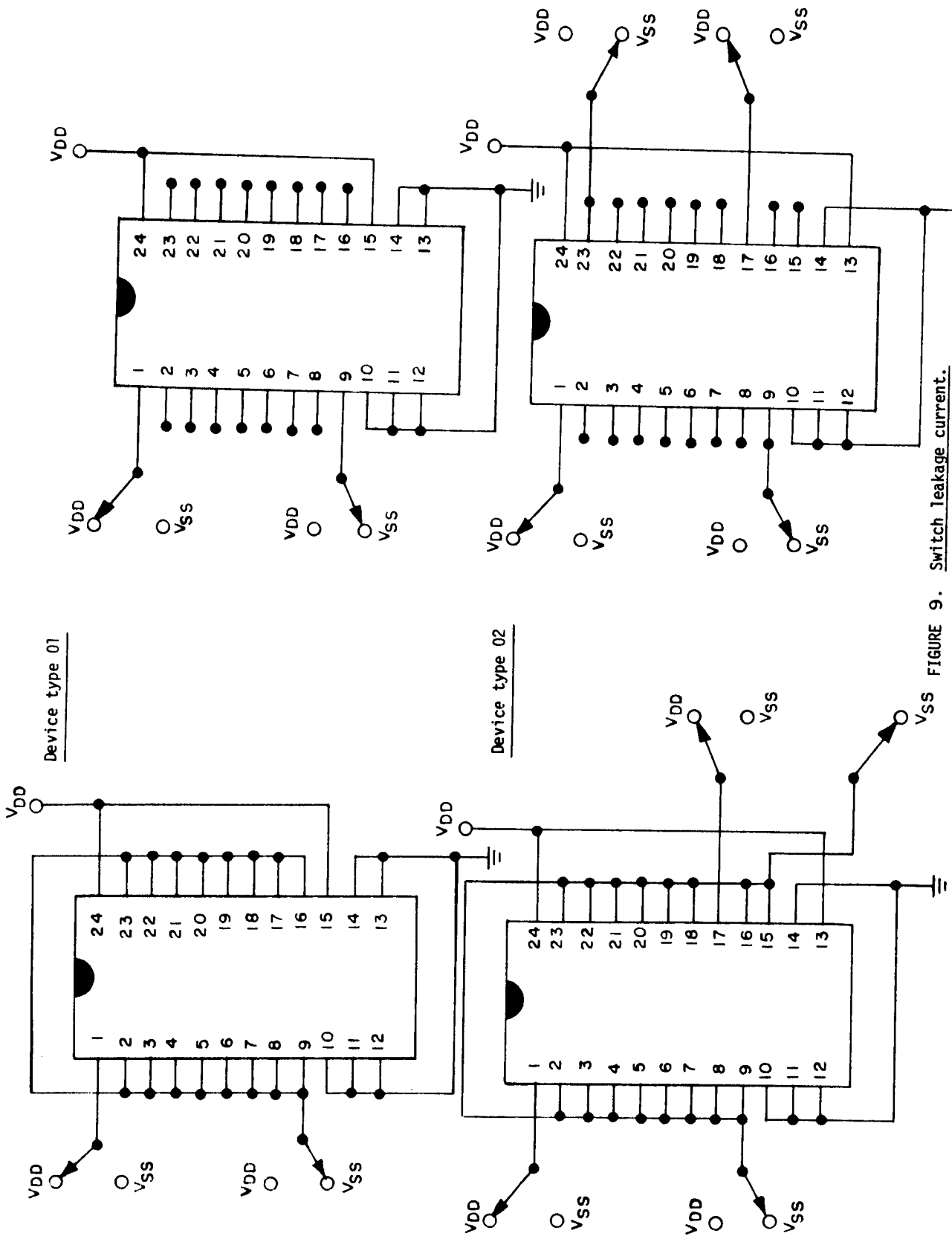


FIGURE 9. Switch leakage current.

Device type 01

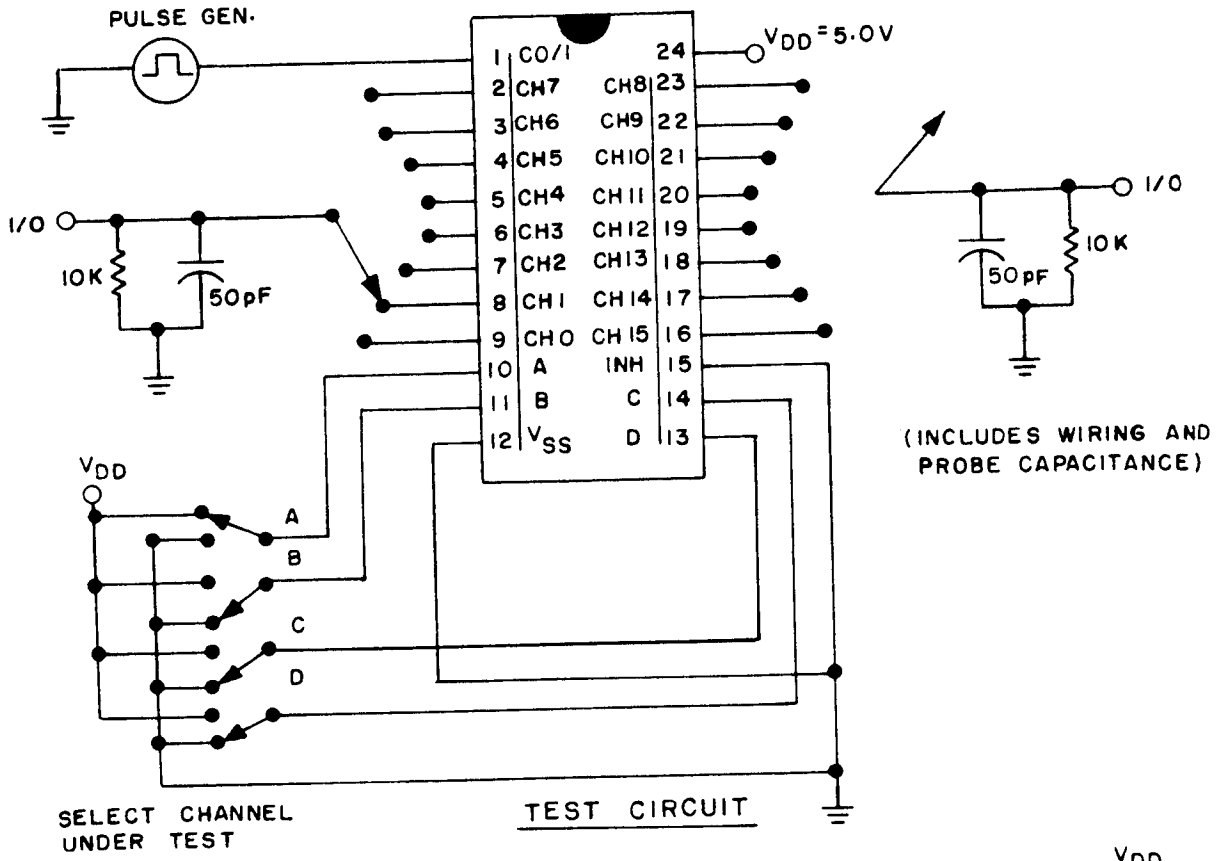


TEST CIRCUIT

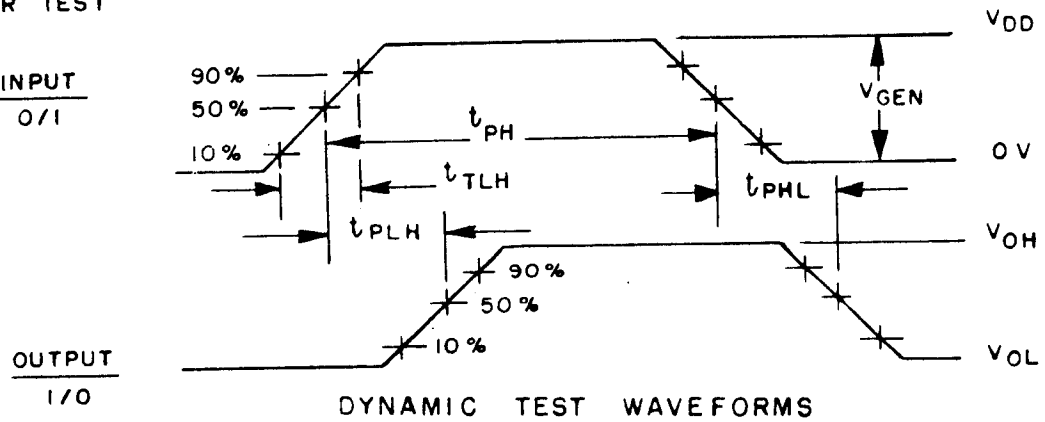


DYNAMIC TEST WAVEFORMS

Input pulse
$V_{GEN} = V_{DD} \pm 1.0\%$
$t_{PH} = 1.0 \pm 0.1$ µs
$t_{THL1} = t_{TLH1} = 20 \pm 2$ ns
PRR = 200 KHz

FIGURE 10. Switching times test circuit and waveforms. (0/I to I/0)

Device type 02

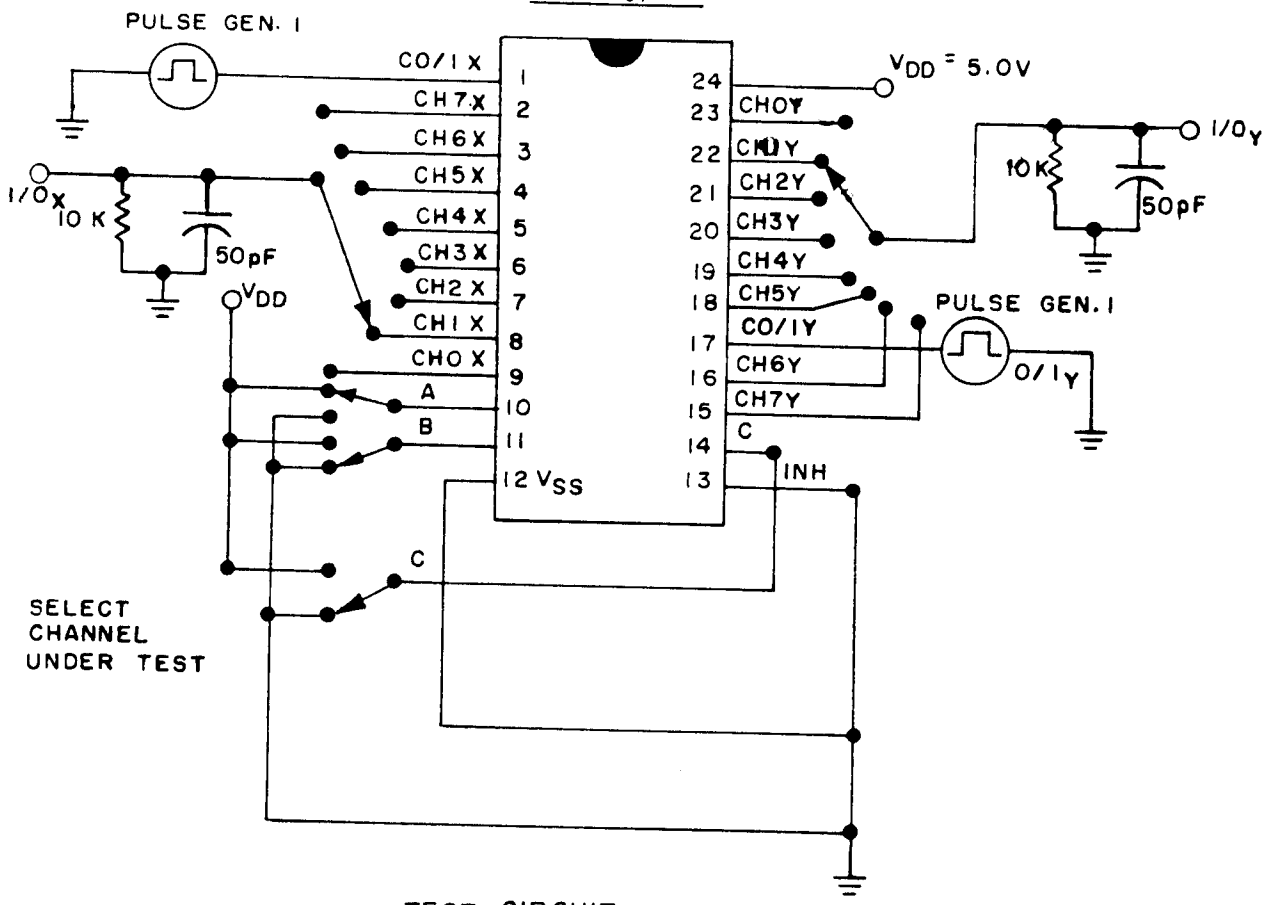


TEST CIRCUIT

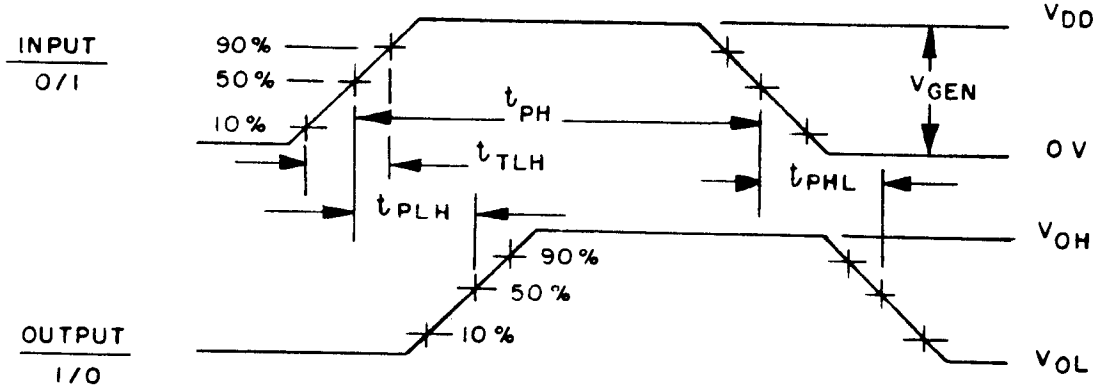


DYNAMIC TEST WAVEFORMS

Input pulse
$V_{GEN} = V_{DD} \pm 1.0\%$.
$t_{PH} = 1.0 \pm 0.1$ µs
$t_{THL1} = t_{TLH1} = 20 \pm 2$ ns
PRR = 200 KHz

FIGURE 11. Switching times test circuit and waveforms.

Device type 01

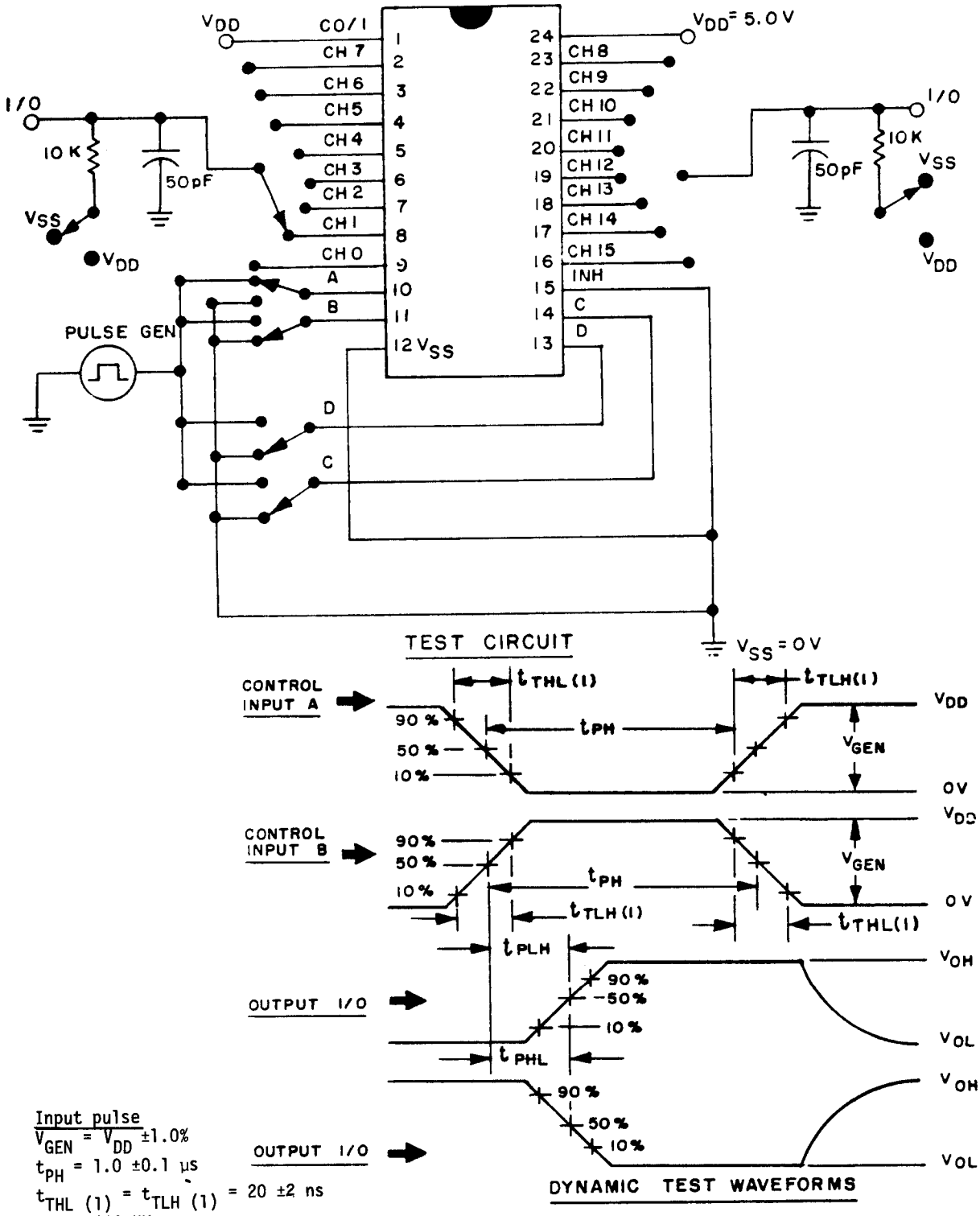


Input pulse
$V_{GEN} = V_{DD} \pm 1.0\%$
$t_{PH} = 1.0 \pm 0.1$ µs
$t_{THL\ (1)} = t_{TLH\ (1)} = 20 \pm 2$ ns
PRR = 200 KHz
Input A used for $t_{PLH}$ test of CH0, and $t_{PHL}$ test of CH1 through CH15.
Input B used for $t_{PHL}$ test of CH0, and $t_{PLH}$ test of CH1 through CH15.

NOTE; RL = 10 kΩ to $V_{SS}$ for $t_{PHL}$
RL = 10 kΩ to $V_{DD}$ for $t_{PLH}$

FIGURE 12. Switching times test cirucit and waveforms.
(Control inputs to I/O)

Device type 02

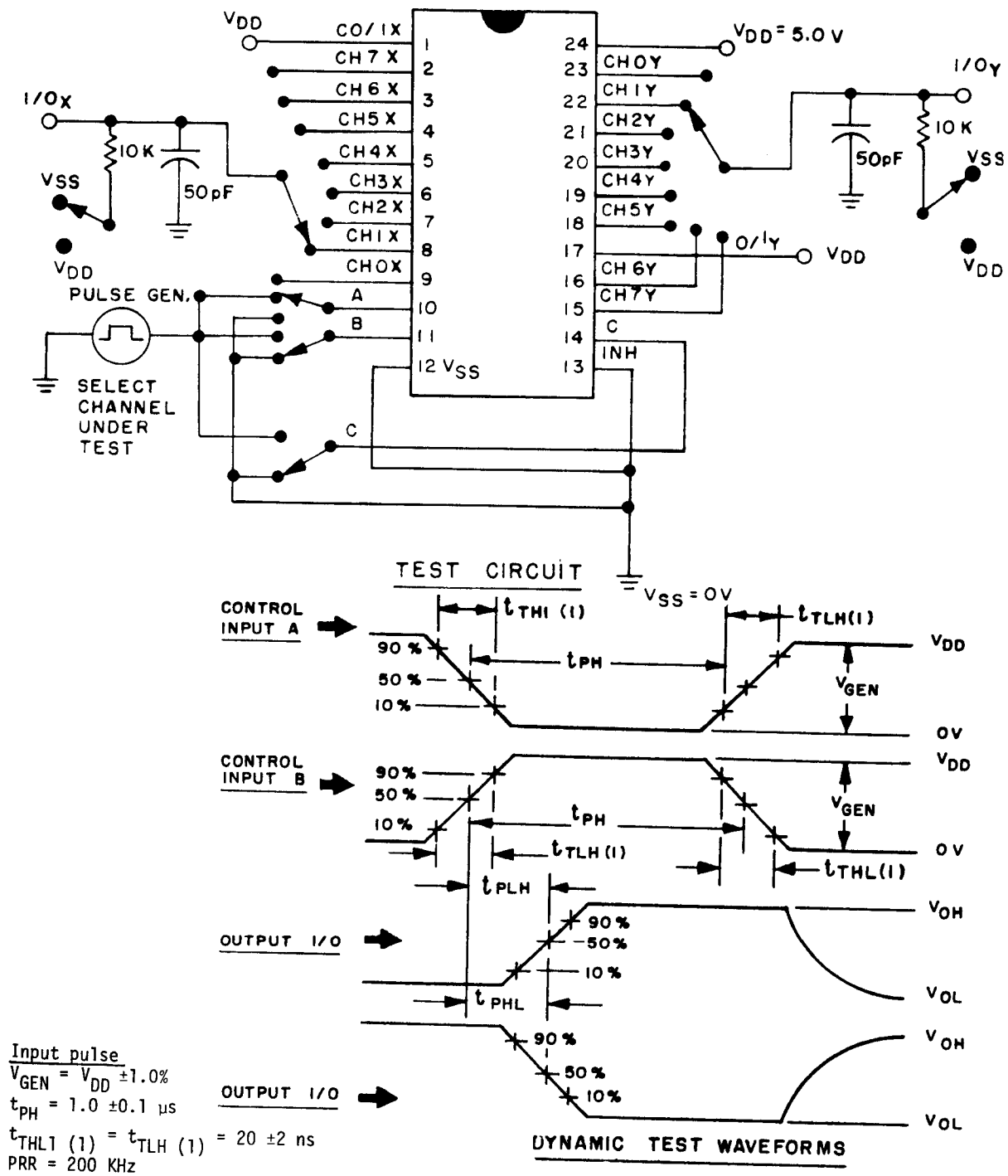


Input pulse
$V_{GEN} = V_{DD} \pm 1.0\%$
$t_{PH} = 1.0 \pm 0.1$ µs
$t_{THL1}(1) = t_{TLH}(1) = 20 \pm 2$ ns
PRR = 200 KHz
Input A used for $t_{PLH}$ test of CHO and for $t_{PHL}$ test of CH1 through CH7
Input B used for $t_{PHL}$ test of CHO and for $t_{PLH}$ test of CH1 through CH7

NOTE $R_L$ = 10 kΩ to $V_{SS}$ for $t_{PLH}$
$R_L$ = 10 kΩ to $V_{DD}$ for $t_{PHL}$

FIGURE 13. Switching times test circuit and waveforms.
(Control inputs to I/O

Device type 01

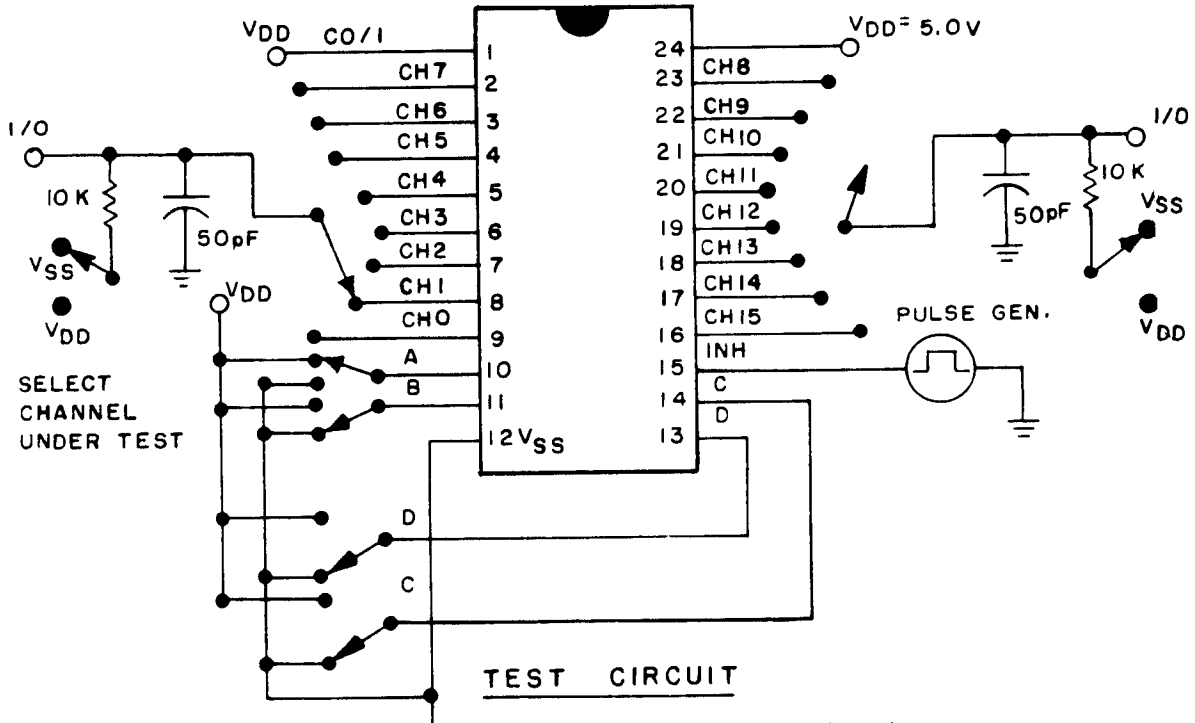


TEST CIRCUIT

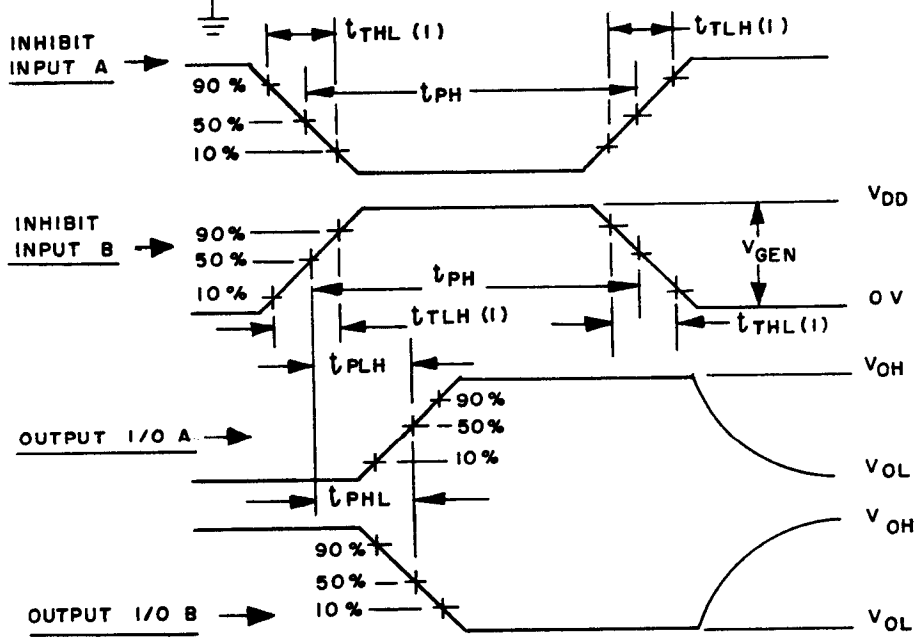


DYNAMIC TEST WAVEFORMS

Input pulse
$V_{GEN} = V_{DD} \pm 1.0\%$
$t_{PH} = 1.0 \pm 0.1$ µs
$t_{THL}(1) = t_{TLH}(1) = 20 \pm 2$ ns
PRR = 200 KHz
Input A used for $t_{PLH}$ tests. Input B used for $t_{PHL}$ tests

NOTE: $R_L$ = 10K to $V_{SS}$ for $t_{PLH}$
$R_L$ = 10K to $V_{DD}$ for $t_{PHL}$

FIGURE 14. Swtiching times test circuit and waveforms. (Inhibit to I/O)

Device type 02

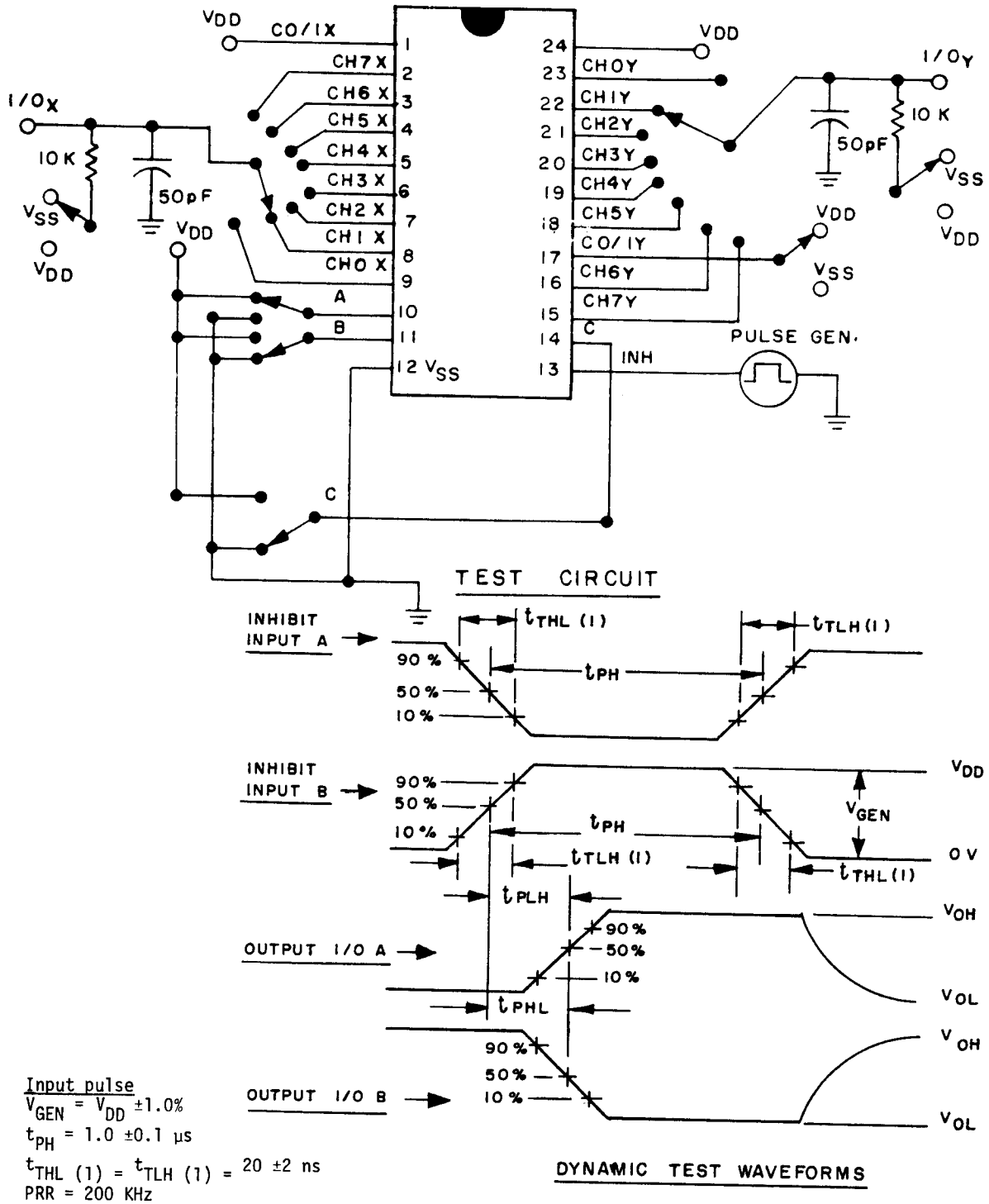


Input pulse
$V_{GEN} = V_{DD} \pm 1.0\%$
$t_{PH} = 1.0 \pm 0.1$ µs
$t_{THL}(1) = t_{TLH}(1) = 20 \pm 2$ ns
PRR = 200 KHz

NOTE: $R_L$ = 10K to $V_{SS}$ for $t_{PLH}$
$R_L$ = 10K to $V_{DD}$ for $t_{PHL}$

FIGURE 15. Switching times test circuit and waveforms.

Device type 03

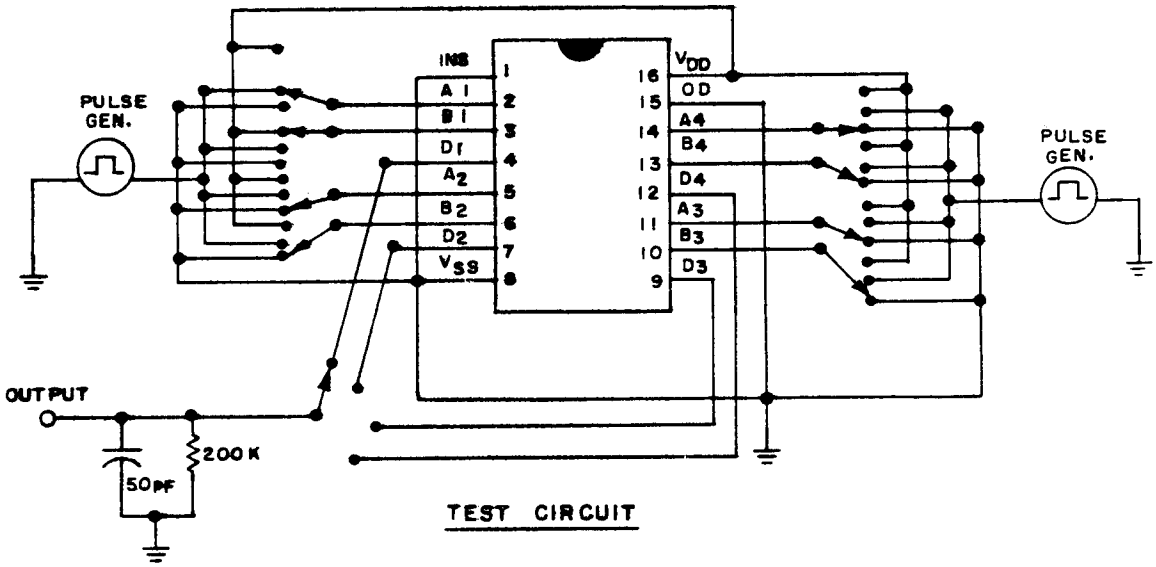


TEST CIRCUIT

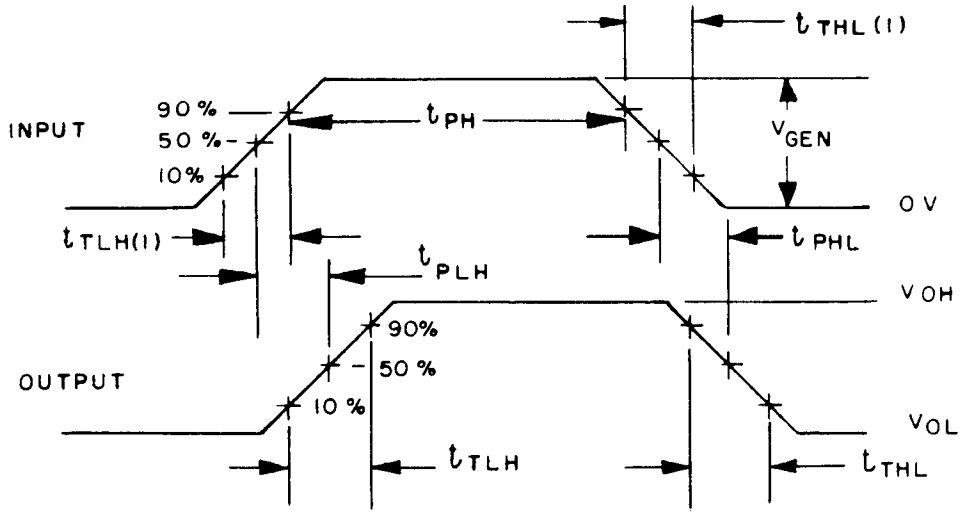


DYNAMIC TEST WAVEFORMS

Input pulse
$V_{GEN} = V_{DD} \pm 1.0\%$
$t_{PH} = 1.0 \pm 0.1\ \mu s$
$t_{THL}(1) = t_{TLH}(1) = 20 \pm 2$ ns
PRR = 200 KHz

FIGURE 16. Switching times test circuit and waveforms.
(Data input to output)

Device type 03

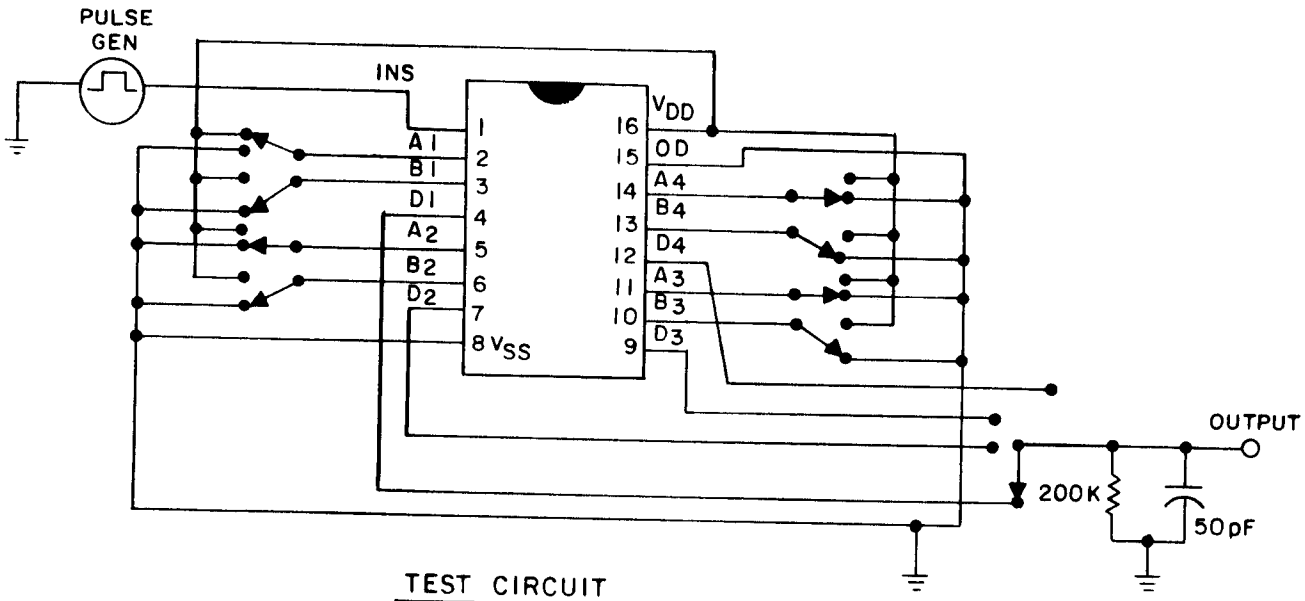


TEST CIRCUIT

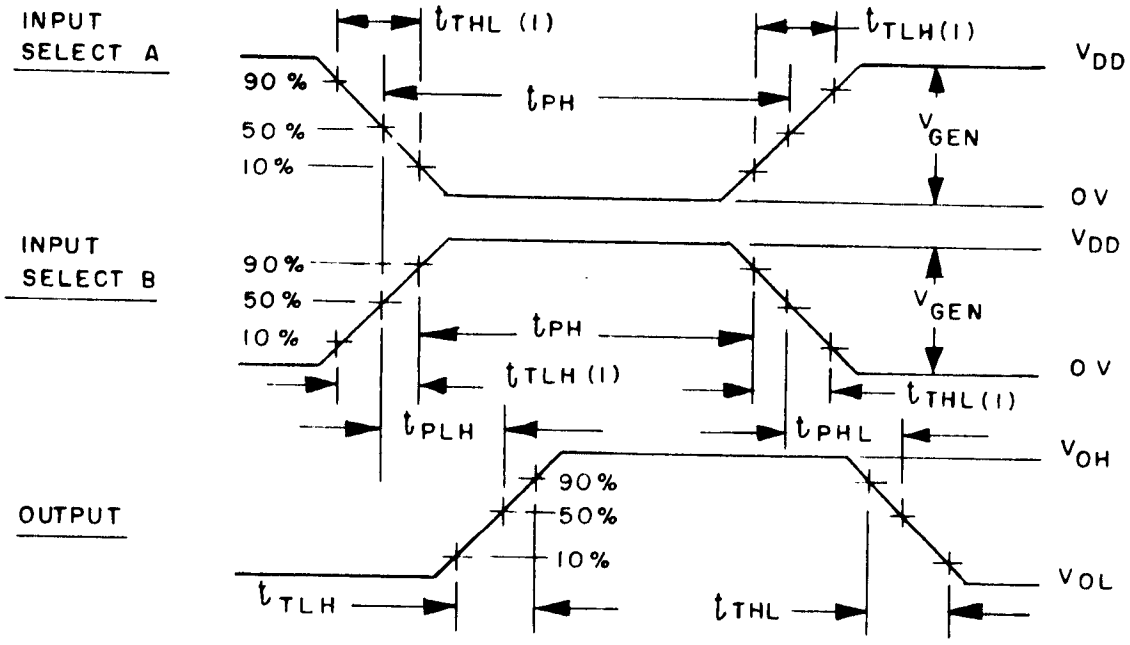


DYNAMIC TEST WAVEFORMS

Input pulse
$V_{GEN} = V_{DD} \pm 1.0\%$
$t_{PH} = 1.0 \pm 0.1\ \mu s$
$t_{THL\ (1)} = t_{TLH\ (1)} = 20 \pm 2$ ns
PRR = 200 KHz
Input A used for tests 171, 173, 175, 177 where A = H, B = L
Input B used for tests 172, 174. 176, 178 where A = 1, B = H

FIGURE 17. Switching times test circuit and waveforms.
(Input select to output)

Device type 03

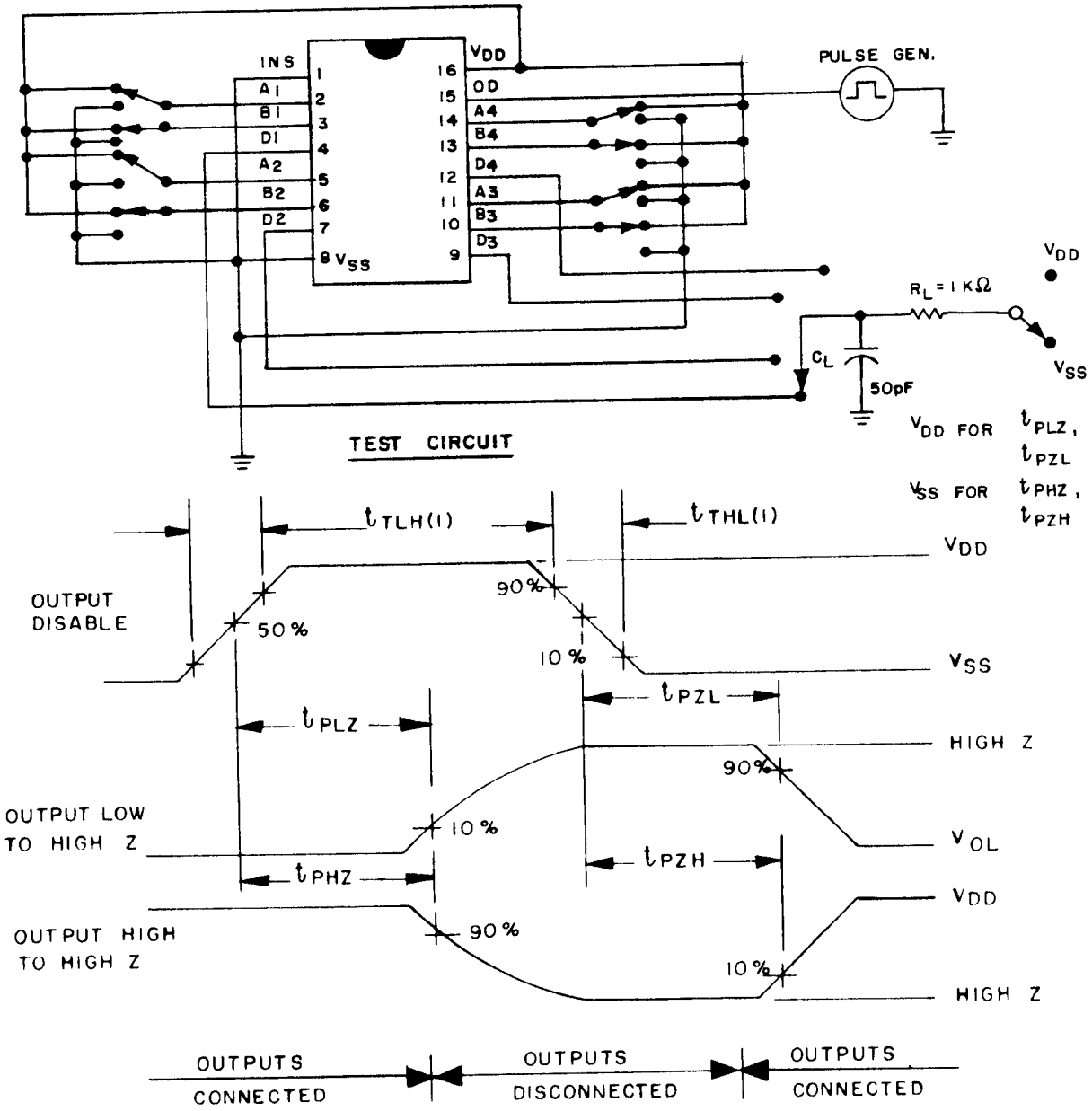


DYNAMIC TEST WAVEFORMS

Input pulse
$V_{GEN} = V_{DD} \pm 1.0\%$
$t_{PH} = 1.0 \pm 0.1$ µs
$t_{THL}(1) = t_{TLH}(1) = 20 \pm 2$ ns
PRR = 200 KHz

FIGURE 18. Switching times test circuit and waveforms. (Output disable to output)

TABLE III. Group A inspection for device type 01.

| Symbol | MIL-STD-883 method | Cases J, K,Z,Y,U | Terminal conditions 1/ | | | | | | | | | | | | | | | | | | | | | | | | Measured terminal | Test limits | | | | | | Units |
|---|---|---|---|---|---|---|---|---|---|---|---|---|---|---|---|---|---|---|---|---|---|---|---|---|---|---|---|---|---|---|---|---|---|---|
| | | | 1 | 2 | 3 | 4 | 5 | 6 | 7 | 8 | 9 | 10 | 11 | 12 | 13 | 14 | 15 | 16 | 17 | 18 | 19 | 20 | 21 | 22 | 23 | 24 | | Subgroup 1 $T_A$ = 25°C | | Subgroup 2 $T_A$ = 125°C | | Subgroup 3 $T_A$ = -55°C | | |
| | | Symbol | $CO/_I$ | $CH_7$ | $CH_6$ | $CH_5$ | $CH_4$ | $CH_3$ | $CH_2$ | $CH_1$ | $CH_0$ | A | B | $V_{SS}$ | D | C | INH | $CH_{15}$ | $CH_{14}$ | $CH_{13}$ | $CH_{12}$ | $CH_{11}$ | $CH_{10}$ | $CH_9$ | $CH_8$ | $V_{DD}$ | | Min | Max | Min | Max | Min | Max | |
| | | Test No. | | | | | | | | | | | | | | | | | | | | | | | | | | | | | | | | |
| $V_{IC(pos)}$ | | 1 | | 1 mA | | | | | | | | | | | | | | | | | | | | | | GND | $CH_7$ | | 1.5 | | | | | Vdc |
| | | 2 | | | 1 mA | | | | | | | | | | | | | | | | | | | | | | $CH_6$ | | | | | | | |
| | | 3 | | | | 1 mA | | | | | | | | | | | | | | | | | | | | | $CH_5$ | | | | | | | |
| | | 4 | | | | | 1 mA | | | | | | | | | | | | | | | | | | | | $CH_4$ | | | | | | | |
| | | 5 | | | | | | 1 mA | | | | | | | | | | | | | | | | | | | $CH_3$ | | | | | | | |
| | | 6 | | | | | | | 1 mA | | | | | | | | | | | | | | | | | | $CH_2$ | | | | | | | |
| | | 7 | | | | | | | | 1 mA | | | | | | | | | | | | | | | | | $CH_1$ | | | | | | | |
| | | 8 | | | | | | | | | 1 mA | | | | | | | | | | | | | | | | $CH_0$ | | | | | | | |
| | | 9 | | | | | | | | | | 1 mA | | | | | | | | | | | | | | | A | | | | | | | |
| | | 10 | | | | | | | | | | | 1 mA | | | | | | | | | | | | | | B | | | | | | | |
| | | 11 | | | | | | | | | | | | | 1 mA | | | | | | | | | | | | D | | | | | | | |
| | | 12 | | | | | | | | | | | | | | 1 mA | | | | | | | | | | | C | | | | | | | |
| | | 13 | | | | | | | | | | | | | | | 1 mA | | | | | | | | | | INH | | | | | | | |
| | | 14 | | | | | | | | | | | | | | | | 1 mA | | | | | | | | | $CH_{15}$ | | | | | | | |
| | | 15 | | | | | | | | | | | | | | | | | 1 mA | | | | | | | | $CH_{14}$ | | | | | | | |
| | | 16 | | | | | | | | | | | | | | | | | | 1 mA | | | | | | | $CH_{13}$ | | | | | | | |
| | | 17 | | | | | | | | | | | | | | | | | | | 1 mA | | | | | | $CH_{12}$ | | | | | | | |
| | | 18 | | | | | | | | | | | | | | | | | | | | 1 mA | | | | | $CH_{11}$ | | | | | | | |
| | | 19 | | | | | | | | | | | | | | | | | | | | | 1 mA | | | | $CH_{10}$ | | | | | | | |
| | | 20 | | | | | | | | | | | | | | | | | | | | | | 1 mA | | | $CH_9$ | | | | | | | |
| | | 21 | | | | | | | | | | | | | | | | | | | | | | | 1 mA | | $CH_8$ | | | | | | | |
| | | 22 | 1 mA | | | | | | | | | | | | | | | | | | | | | | | | $CO/_I$ | | | | | | | |
| $V_{IC(neg)}$ | | 23 | | -1 mA | | | | | | | | | | GND | | | | | | | | | | | | | $CH_7$ | | -6.0 | | | | | |
| | | 24 | | | +1 mA | | | | | | | | | | | | | | | | | | | | | | $CH_6$ | | | | | | | |
| | | 25 | | | | -1 mA | | | | | | | | | | | | | | | | | | | | | $CH_5$ | | | | | | | |
| | | 26 | | | | | -1 mA | | | | | | | | | | | | | | | | | | | | $CH_4$ | | | | | | | |
| | | 27 | | | | | | -1 mA | | | | | | | | | | | | | | | | | | | $CH_3$ | | | | | | | |

See footnotes at end of table.

TABLE III. Group A inspection for device type 01 - Continued.

| Symbol | MIL-STD-883 method | Cases J, K,Z,Y,U | Terminal conditions 1/ | | | | | | | | | | | | | | | | | | | | | | | | Measured terminal | Test limits | | | | | | Units |
|---|---|---|---|---|---|---|---|---|---|---|---|---|---|---|---|---|---|---|---|---|---|---|---|---|---|---|---|---|---|---|---|---|---|---|
| | | | 1 | 2 | 3 | 4 | 5 | 6 | 7 | 8 | 9 | 10 | 11 | 12 | 13 | 14 | 15 | 16 | 17 | 18 | 19 | 20 | 21 | 22 | 23 | 24 | | Subgroup 1 $T_A$ = 25°C | | Subgroup 2 $T_A$ = 125°C | | Subgroup 3 $T_A$ = -55°C | | |
| | | Symbol | $CO/_I$ | $CH_7$ | $CH_6$ | $CH_5$ | $CH_4$ | $CH_3$ | $CH_2$ | $CH_1$ | $CH_0$ | A | B | $V_{SS}$ | D | C | INH | $CH_{15}$ | $CH_{14}$ | $CH_{13}$ | $CH_{12}$ | $CH_{11}$ | $CH_{10}$ | $CH_9$ | $CH_8$ | $V_{DD}$ | | Min | Max | Min | Max | Min | Max | |
| | | Test No. | | | | | | | | | | | | | | | | | | | | | | | | | | | | | | | | |
| $V_{IC(neg)}$ | | 28 | | | | | | | -1 mA | | | | | GND | | | | | | | | | | | | | $CH_2$ | | -6.0 | | | | | Vdc |
| | | 29 | | | | | | | | -1 mA | | | | | | | | | | | | | | | | | $CH_1$ | | | | | | | |
| | | 30 | | | | | | | | | -1 mA | | | | | | | | | | | | | | | | $CH_0$ | | | | | | | |
| | | 31 | | | | | | | | | | -1 mA | | | | | | | | | | | | | | | A | | | | | | | |
| | | 32 | | | | | | | | | | | -1 mA | | | | | | | | | | | | | | B | | | | | | | |
| | | 33 | | | | | | | | | | | | | -1 mA | | | | | | | | | | | | D | | | | | | | |
| | | 34 | | | | | | | | | | | | | | -1 mA | | | | | | | | | | | C | | | | | | | |
| | | 35 | | | | | | | | | | | | | | | -1 mA | | | | | | | | | | INH | | | | | | | |
| | | 36 | | | | | | | | | | | | | | | | -1 mA | | | | | | | | | $CH_{15}$ | | | | | | | |
| | | 37 | | | | | | | | | | | | | | | | | -1 mA | | | | | | | | $CH_{14}$ | | | | | | | |
| | | 38 | | | | | | | | | | | | | | | | | | -1 mA | | | | | | | $CH_{13}$ | | | | | | | |
| | | 39 | | | | | | | | | | | | | | | | | | | -1 mA | | | | | | $CH_{12}$ | | | | | | | |
| | | 40 | | | | | | | | | | | | | | | | | | | | -1 mA | | | | | $CH_{11}$ | | | | | | | |
| | | 41 | | | | | | | | | | | | | | | | | | | | | -1 mA | | | | $CH_{10}$ | | | | | | | |
| | | 42 | | | | | | | | | | | | | | | | | | | | | | -1 mA | | | $CH_9$ | | | | | | | |
| | | 43 | | | | | | | | | | | | | | | | | | | | | | | -1 mA | | $CH_8$ | | | | | | | |
| | | 44 | -1 mA | | | | | | | | | | | | | | | | | | | | | | | | $CO/_I$ | | | | | | | |
| $I_{OS}$ 2/ | 3005 | 45 | GND | GND | GND | GND | GND | GND | GND | GND | GND | GND | GND | | GND | GND | GND | GND | GND | GND | GND | GND | GND | GND | GND | 18.0 V | $V_{SS}$ | | +0.25 | | -2.5 | | | µA |
| | | 46 | | | | | | | | | | 18.0 V | 18.0 V | | 18.0 V | 18.0 V | | | | | | | | | | | | | | | | | | |
| | | 47 | | | | | | | | | | 18.0 V | 18.0 V | | GND | GND | | | | | | | | | | | | | | | | | | |
| | | 48 | | | | | | | | | | GND | GND | | GND | GND | | | | | | | | | | | | | | | | | | |
| | | 49 | | 18.0 V | 18.0 V | 18.0 V | 18.0 V | 18.0 V | 18.0 V | 18.0 V | 18.0 V | 18.0 V | 18.0 V | | 18.0 V | 18.0 V | | 18.0 V | 18.0 V | 18.0 V | 18.0 V | 18.0 V | 18.0 V | 18.0 V | 18.0 V | | | | | | | | | |
| | | 50 | | 18.0 V | 18.0 V | 18.0 V | 18.0 V | 18.0 V | 18.0 V | 18.0 V | 18.0 V | 18.0 V | 18.0 V | | GND | 18.0 V | | GND | | | | | | | | | | | | | | | | |
| | | 51 | 18.0 V | 18.0 V | 18.0 V | 18.0 V | 18.0 V | 18.0 V | 18.0 V | 18.0 V | 18.0 V | GND | GND | | GND | GND | | 18.0 V | | | | | | | | | | | | | | | | |
| | | 52 | GND | GND | GND | GND | GND | GND | GND | GND | GND | GND | GND | | GND | 18.0 V | | GND | | | | | | | | | | | | | | | | |
| | | 53 | 18.0 V | 18.0 V | GND | 18.0 V | GND | 18.0 V | GND | GND | GND | 18.0 V | GND | | 18.0 V | GND | | 18.0 V | GND | GND | GND | GND | GND | GND | GND | | | | | | | | | |

See footnotes at end of table.

TABLE III. Group A inspection for device type 01 - Continued.

| Symbol | MIL-STD-883 method | Cases J, K,Z,Y,U | Terminal conditions 1/ | | | | | | | | | | | | | | | | | | | | | | | | Measured terminal | Test limits | | | | | | Units |
|---|---|---|---|---|---|---|---|---|---|---|---|---|---|---|---|---|---|---|---|---|---|---|---|---|---|---|---|---|---|---|---|---|---|---|
| | | | 1 | 2 | 3 | 4 | 5 | 6 | 7 | 8 | 9 | 10 | 11 | 12 | 13 | 14 | 15 | 16 | 17 | 18 | 19 | 20 | 21 | 22 | 23 | 24 | | Subgroup 1 $T_A$ = 25°C | | Subgroup 2 $T_A$ = 125°C | | Subgroup 3 $T_A$ = -55°C | | |
| | | Symbol | $CO/_I$ | $CH_7$ | $CH_6$ | $CH_5$ | $CH_4$ | $CH_3$ | $CH_2$ | $CH_1$ | $CH_0$ | A | B | $V_{SS}$ | D | C | INH | $CH_{15}$ | $CH_{14}$ | $CH_{13}$ | $CH_{12}$ | $CH_{11}$ | $CH_{10}$ | $CH_9$ | $CH_8$ | $V_{DD}$ | | | | | | | | |
| | | Test No. | | | | | | | | | | | | | | | | | | | | | | | | | | Min | Max | Min | Max | Min | Max | |
| $V_{OH1}$ | 3006 | 54 | | | | | | | | | | 15.0 V | 15.0 V | GND | 15.0 V | 15.0 V | GND | 15.0 V | | | | | | | | 15.0 V | $CO/_I$ | 14.95 | | 14.95 | | 14.95 | | Vdc |
| | | 55 | 15.0 V | | | | | | | | | GND | GND | | GND | GND | | | | | | | | | | | $CH_0$ | | | | | | | |
| | | 56 | | | | | | | | | | 15.0 V | GND | | | | | | | | | | | | | | $CH_1$ | | | | | | | |
| | | 57 | | | | | | | | | | GND | 15.0 V | | | | | | | | | | | | | | $CH_2$ | | | | | | | |
| | | 58 | | | | | | | | | | 15.0 V | 15.0 V | | | | | | | | | | | | | | $CH_3$ | | | | | | | |
| | | 59 | | | | | | | | | | GND | GND | | | 15.0 V | | | | | | | | | | | $CH_4$ | | | | | | | |
| | | 60 | | | | | | | | | | 15.0 V | GND | | | | | | | | | | | | | | $CH_5$ | | | | | | | |
| | | 61 | | | | | | | | | | GND | 15.0 V | | | | | | | | | | | | | | $CH_6$ | | | | | | | |
| | | 62 | | | | | | | | | | 15.0 V | 15.0 V | | | | | | | | | | | | | | $CH_7$ | | | | | | | |
| | | 63 | | | | | | | | | | GND | GND | | 15.0 V | GND | | | | | | | | | | | $CH_8$ | | | | | | | |
| | | 64 | | | | | | | | | | 15.0 V | GND | | | | | | | | | | | | | | $CH_9$ | | | | | | | |
| | | 65 | | | | | | | | | | GND | 15.0 V | | | | | | | | | | | | | | $CH_{10}$ | | | | | | | |
| | | 66 | | | | | | | | | | 15.0 V | 15.0 V | | | | | | | | | | | | | | $CH_{11}$ | | | | | | | |
| | | 67 | | | | | | | | | | GND | GND | | | 15.0 V | | | | | | | | | | | $CH_{12}$ | | | | | | | |
| | | 68 | | | | | | | | | | 15.0 V | GND | | | | | | | | | | | | | | $CH_{13}$ | | | | | | | |
| | | 69 | | | | | | | | | | GND | 15.0 V | | | | | | | | | | | | | | $CH_{14}$ | | | | | | | |
| | | 70 | | | | | | | | | | 15.0 V | 15.0 V | | | | | | | | | | | | | | $CH_{15}$ | | | | | | | |
| $V_{OL1}$ | 3007 | 71 | | | | | | | | | GND | GND | GND | | GND | GND | GND | | | | | | | | | | $CO/_I$ | | 0.05 | | 0.05 | | 0.05 | |
| | | 72 | GND | | | | | | | | | GND | GND | | | | | | | | | | | | | | $CH_0$ | | | | | | | |
| | | 73 | | | | | | | | | | 15.0 V | GND | | | | | | | | | | | | | | $CH_1$ | | | | | | | |
| | | 74 | | | | | | | | | | GND | 15.0 V | | | | | | | | | | | | | | $CH_2$ | | | | | | | |
| | | 75 | | | | | | | | | | 15.0 V | 15.0 V | | | | | | | | | | | | | | $CH_3$ | | | | | | | |
| | | 76 | | | | | | | | | | GND | GND | | | 15.0 V | | | | | | | | | | | $CH_4$ | | | | | | | |
| | | 77 | | | | | | | | | | 15.0 V | GND | | | | | | | | | | | | | | $CH_5$ | | | | | | | |
| | | 78 | | | | | | | | | | GND | 15.0 V | | | | | | | | | | | | | | $CH_6$ | | | | | | | |
| | | 79 | | | | | | | | | | 15.0 V | 15.0 V | | | | | | | | | | | | | | $CH_7$ | | | | | | | |
| | | 80 | | | | | | | | | | GND | GND | | 15.0 V | GND | | | | | | | | | | | $CH_8$ | | | | | | | |

See footnotes at end of table.

TABLE III. Group A inspection for device type 01 - Continued.

| Symbol | MIL-STD-883 method | Cases J, K,Z,Y,U | Terminal conditions 1/ | | | | | | | | | | | | | | | | | | | | | | | | Measured terminal | Test limits | | | | | | Units |
|---|---|---|---|---|---|---|---|---|---|---|---|---|---|---|---|---|---|---|---|---|---|---|---|---|---|---|---|---|---|---|---|---|---|---|
| | | | 1 | 2 | 3 | 4 | 5 | 6 | 7 | 8 | 9 | 10 | 11 | 12 | 13 | 14 | 15 | 16 | 17 | 18 | 19 | 20 | 21 | 22 | 23 | 24 | | Subgroup 1 $T_A$ = 25°C | | Subgroup 2 $T_A$ = 125°C | | Subgroup 3 $T_A$ = -55°C | | |
| | | Symbol | $CO/_I$ | $CH_7$ | $CH_6$ | $CH_5$ | $CH_4$ | $CH_3$ | $CH_2$ | $CH_1$ | $CH_0$ | A | B | $V_{SS}$ | D | C | INH | $CH_{15}$ | $CH_{14}$ | $CH_{13}$ | $CH_{12}$ | $CH_{11}$ | $CH_{10}$ | $CH_9$ | $CH_8$ | $V_{DD}$ | | Min | Max | Min | Max | Min | Max | |
| | | Test No. | | | | | | | | | | | | | | | | | | | | | | | | | | | | | | | | |
| $V_{OL1}$ | 3007 | 81 | GND | | | | | | | | | 15.0 V | GND | GND | 15.0 V | GND | GND | | | | | | | | | 15.0 V | $CH_9$ | | 0.05 | | 0.05 | | 0.05 | Vdc |
| | | 82 | | | | | | | | | | GND | 15.0 V | | | | | | | | | | | | | | $CH_{10}$ | | | | | | | |
| | | 83 | | | | | | | | | | 15.0 V | 15.0 V | | | | | | | | | | | | | | $CH_{11}$ | | | | | | | |
| | | 84 | | | | | | | | | | GND | GND | | | 15.0 V | | | | | | | | | | | $CH_{12}$ | | | | | | | |
| | | 85 | | | | | | | | | | 15.0 V | GND | | | | | | | | | | | | | | $CH_{13}$ | | | | | | | |
| | | 86 | | | | | | | | | | GND | 15.0 V | | | | | | | | | | | | | | $CH_{14}$ | | | | | | | |
| | | 87 | | | | | | | | | | 15.0 V | 15.0 V | | | | | | | | | | | | | | $CH_{15}$ | | | | | | | |
| $I_{IH1}$ 3/ | 3010 | 88 | | 18.0 V | 18.0 V | 18.0 V | 18.0 V | 18.0 V | 18.0 V | 18.0 V | 18.0 V | 18.0 V | 18.0 V | | 18.0 V | 18.0 V | 18.0 V | 18.0 V | 18.0 V | 18.0 V | 18.0 V | 18.0 V | 18.0 V | 18.0 V | 18.0 V | 18.0 V | All inputs | | 21 | | | | | nA |
| $I_{IH2}$ 3/ | | 89 | 18.0 V | | | | | | | | | GND | GND | | GND | GND | GND | | | | | | | | | | $CO/_I$ | | 1.0 | | 45 | | | |
| | | 90 | | GND | GND | GND | GND | GND | GND | GND | GND | 18.0 V | GND | | | GND | | GND | GND | GND | GND | GND | GND | GND | GND | | A | | | | | | | |
| | | 91 | | | | | | | | | | GND | 18.0 V | | | GND | | | | | | | | | | | B | | | | | | | |
| | | 92 | | | | | | | | | | | GND | | | 18.0 V | | | | | | | | | | | C | | | | | | | |
| | | 93 | | | | | | | | | | | | | 18.0 V | GND | | | | | | | | | | | D | | | | | | | |
| | | 94 | | | | | | | | | | | | | GND | | 18.0 V | | | | | | | | | | INH | | | | | | | |
| | | 95 | | | | | | | | | 18.0 V | | | | | | GND | | | | | | | | | | $CH_0$ | | | | | | | |
| | | 96 | | | | | | | | 18.0 V | GND | 18.0 V | | | | | | | | | | | | | | | $CH_1$ | | | | | | | |
| | | 97 | | | | | | | 18.0 V | GND | | GND | 18.0 V | | | | | | | | | | | | | | $CH_2$ | | | | | | | |
| | | 98 | | | | | | 18.0 V | GND | | | 18.0 V | 18.0 V | | | | | | | | | | | | | | $CH_3$ | | | | | | | |
| | | 99 | | | | | 18.0 V | GND | | | | GND | GND | | | 18.0 V | | | | | | | | | | | $CH_4$ | | | | | | | |
| | | 100 | | | | 18.0 V | GND | | | | | 18.0 V | GND | | | | | | | | | | | | | | $CH_5$ | | | | | | | |
| | | 101 | | | 18.0 V | GND | | | | | | GND | 18.0 V | | | | | | | | | | | | | | $CH_6$ | | | | | | | |
| | | 102 | | 18.0 V | GND | | | | | | | 18.0 V | 18.0 V | | | | | | | | | | | | | | $CH_7$ | | | | | | | |
| | | 103 | | GND | | | | | | | | GND | GND | | 18.0 V | GND | | | | | | | | | 18.0 V | | $CH_8$ | | | | | | | |
| | | 104 | | | | | | | | | | 18.0 V | GND | | | | | | | | | | | 18.0 V | GND | | $CH_9$ | | | | | | | |
| | | 105 | | | | | | | | | | GND | 18.0 V | | | | | | | | | | 18.0 V | GND | | | $CH_{10}$ | | | | | | | |
| | | 106 | | | | | | | | | | 18.0 V | 18.0 V | | | | | | | | | 18.0 V | GND | GND | | | $CH_{11}$ | | | | | | | |
| | | 107 | | | | | | | | | | GND | GND | | | 18.0 V | | | | | 18.0 V | GND | GND | GND | | | $CH_{12}$ | | | | | | | V |

See footnotes at end of table.

TABLE III. Group A inspection for device type 01 - Continued.

| Symbol | MIL-STD-883 method | Cases J, K,Z,Y,U | Terminal conditions 1/ | | | | | | | | | | | | | | | | | | | | | | | | Measured terminal | Test limits | | | | | | Units |
|---|---|---|---|---|---|---|---|---|---|---|---|---|---|---|---|---|---|---|---|---|---|---|---|---|---|---|---|---|---|---|---|---|---|---|
| | | | 1 | 2 | 3 | 4 | 5 | 6 | 7 | 8 | 9 | 10 | 11 | 12 | 13 | 14 | 15 | 16 | 17 | 18 | 19 | 20 | 21 | 22 | 23 | 24 | | Subgroup 1 $T_A$ = 25°C | | Subgroup 2 $T_A$ = 125°C | | Subgroup 3 $T_A$ = -55°C | | |
| | | Symbol | $CO/_I$ | $CH_7$ | $CH_6$ | $CH_5$ | $CH_4$ | $CH_3$ | $CH_2$ | $CH_1$ | $CH_0$ | A | B | $V_{SS}$ | D | C | INH | $CH_{15}$ | $CH_{14}$ | $CH_{13}$ | $CH_{12}$ | $CH_{11}$ | $CH_{10}$ | $CH_9$ | $CH_8$ | $V_{DD}$ | | Min | Max | Min | Max | Min | Max | |
| | | Test No. | | | | | | | | | | | | | | | | | | | | | | | | | | | | | | | | |
| $I_{IH2}$ 3/ | 3010 | 108 | | GND | GND | GND | GND | GND | GND | GND | GND | 18.0 V | GND | GND | 18.0 V | 18.0 V | GND | GND | GND | 18.0 V | GND | GND | GND | GND | GND | 18.0 V | $CH_{13}$ | | 1.0 | | 45 | | | nA |
| $I_{IH2}$ 3/ | 3010 | 109 | | | | | | | | | | GND | 18.0 V | | 18.0 V | 18.0 V | | GND | 18.0 V | GND | GND | GND | GND | GND | GND | | $CH_{14}$ | | 1.0 | | 45 | | | |
| $I_{IH2}$ 3/ | 3010 | 110 | | | | | | | | | | 18.0 V | 18.0 V | | 18.0 V | 18.0 V | | 18.0 V | GND | GND | GND | GND | GND | GND | GND | | $CH_{15}$ | | 1.0 | | 45 | | | |
| $I_{IL1}$ | 3009 | 111 | | | | | | | | | | GND | GND | | GND | GND | | GND | GND | GND | GND | GND | GND | GND | GND | | All inputs | | -21 | | | | | |
| $I_{IL2}$ 3/ | | 112 | GND | | | | | | | | | 18.0 V | 18.0 V | | 18.0 V | 18.0 V | | | | | | | | | | | $CO/_I$ | | -1.0 | | -45 | | | |
| | | 113 | | 18.0 V | 18.0 V | 18.0 V | 18.0 V | 18.0 V | 18.0 V | 18.0 V | 18.0 V | GND | 18.0 V | | | 18.0 V | | 18.0 V | 18.0 V | 18.0 V | 18.0 V | 18.0 V | 18.0 V | 18.0 V | 18.0 V | | A | | | | | | | |
| | | 114 | | | | | | | | | | 18.0 V | GND | | | 18.0 V | | | | | | | | | | | B | | | | | | | |
| | | 115 | | | | | | | | | | | 18.0 V | | | GND | | | | | | | | | | | C | | | | | | | |
| | | 116 | | | | | | | | | | | 18.0 V | | GND | 18.0 V | | | | | | | | | | | D | | | | | | | |
| | | 117 | | | | | | | | | | | 18.0 V | | 18.0 V | 18.0 V | | | | | | | | | | | INH | | | | | | | |
| | | 118 | | | | | | | | | GND | GND | GND | | GND | GND | | | | | | | | | | | $CH_0$ | | | | | | | |
| | | 119 | | | | | | | | GND | 18.0 V | 18.0 V | GND | | | | | | | | | | | | | | $CH_1$ | | | | | | | |
| | | 120 | | | | | | | GND | 18.0 V | | GND | 18.0 V | | | | | | | | | | | | | | $CH_2$ | | | | | | | |
| | | 121 | | | | | | GND | 18.0 V | | | 18.0 V | 18.0 V | | | | | | | | | | | | | | $CH_3$ | | | | | | | |
| | | 122 | | | | | GND | 18.0 V | | | | GND | GND | | | 18.0 V | | | | | | | | | | | $CH_4$ | | | | | | | |
| | | 123 | | | | GND | 18.0 V | | | | | 18.0 V | GND | | | | | | | | | | | | | | $CH_5$ | | | | | | | |
| | | 124 | | | GND | 18.0 V | | | | | | GND | 18.0 V | | | | | | | | | | | | | | $CH_6$ | | | | | | | |
| | | 125 | | GND | 18.0 V | | | | | | | 18.0 V | 18.0 V | | | | | | | | | | | | | | $CH_7$ | | | | | | | |
| | | 126 | | 18.0 V | | | | | | | | GND | GND | | 18.0 V | GND | | | | | | | | | GND | | $CH_8$ | | | | | | | |
| | | 127 | | | | | | | | | | 18.0 V | GND | | | | | | | | | | | GND | 18.0 V | | $CH_9$ | | | | | | | |
| | | 128 | | | | | | | | | | GND | 18.0 V | | | | | | | | | | GND | 18.0 V | | | $CH_{10}$ | | | | | | | |
| | | 129 | | | | | | | | | | 18.0 V | 18.0 V | | | | | | | | | GND | 18.0 V | | | | $CH_{11}$ | | | | | | | |
| | | 130 | | | | | | | | | | GND | GND | | | 18.0 V | | | | | GND | 18.0 V | | | | | $CH_{12}$ | | | | | | | |
| | | 131 | | | | | | | | | | 18.0 V | GND | | | | | | | GND | 18.0 V | | | | | | $CH_{13}$ | | | | | | | |
| | | 132 | | | | | | | | | | GND | 18.0 V | | | | | | GND | 18.0 V | 18.0 V | | | | | | $CH_{14}$ | | | | | | | |
| | | 133 | | | | | | | | | | 18.0 V | 18.0 V | | | | | GND | 18.0 V | 18.0 V | 18.0 V | | | | | | $CH_{15}$ | | | | | | | |

See footnotes at end of table.

TABLE III. Group A inspection for device type 01 - Continued.

| Symbol | MIL-STD-883 method | Cases J, K, Z, Y, U | Terminal conditions 1/ | | | | | | | | | | | | | | | | | | | | | | | Measured terminal | Test limits | | | | | | Units |
|---|---|---|---|---|---|---|---|---|---|---|---|---|---|---|---|---|---|---|---|---|---|---|---|---|---|---|---|---|---|---|---|---|---|
| | | | 1 | 2 | 3 | 4 | 5 | 6 | 7 | 8 | 9 | 10 | 11 | 12 | 13 | 14 | 15 | 16 | 17 | 18 | 19 | 20 | 21 | 22 | 23 | 24 | | Subgroup 1 $T_A$ = 25°C | | Subgroup 2 $T_A$ = 125°C | | Subgroup 3 $T_A$ = -55°C | | |
| | | Symbol | $CO/_I$ | $CH_7$ | $CH_6$ | $CH_5$ | $CH_4$ | $CH_3$ | $CH_2$ | $CH_1$ | $CH_0$ | A | B | $V_{SS}$ | D | C | INH | $CH_{15}$ | $CH_{14}$ | $CH_{13}$ | $CH_{12}$ | $CH_{11}$ | $CH_{10}$ | $CH_9$ | $CH_8$ | $V_{DD}$ | | Min | Max | Min | Max | Min | Max | |
| | | Test No. | | | | | | | | | | | | | | | | | | | | | | | | | | | | | | | |
| $R_{ON11}$ | Fig. 6 | 134 | $V_{IS}$ = -2.0 V | | | | | | | | $V_{OS}$ | -2.5 V | -2.5 V | -2.5 V | -2.5 V | -2.5 V | -2.5 V | | | | | | | | | 2.5 V | $CH_0$ | | 500 | | 700 | | 350 | Ω |
| | | 135 | | | | | | | | $V_{OS}$ | | 2.5 V | -2.5 V | | | | | | | | | | | | | | $CH_1$ | | | | | | | |
| | | 136 | | | | | | | $V_{OS}$ | | | -2.5 V | 2.5 V | | | | | | | | | | | | | | $CH_2$ | | | | | | | |
| | | 137 | | | | | | $V_{OS}$ | | | | 2.5 V | 2.5 V | | | | | | | | | | | | | | $CH_3$ | | | | | | | |
| | | 138 | | | | | $V_{OS}$ | | | | | -2.5 V | -2.5 V | | | 2.5 V | | | | | | | | | | | $CH_4$ | | | | | | | |
| | | 139 | | | | $V_{OS}$ | | | | | | 2.5 V | -2.5 V | | | | | | | | | | | | | | $CH_5$ | | | | | | | |
| | | 140 | | | $V_{OS}$ | | | | | | | -2.5 V | 2.5 V | | | | | | | | | | | | | | $CH_6$ | | | | | | | |
| | | 141 | | $V_{OS}$ | | | | | | | | 2.5 V | 2.5 V | | | | | | | | | | | | | | $CH_7$ | | | | | | | |
| | | 142 | | | | | | | | | | -2.5 V | -2.5 V | | 2.5 V | -2.5 V | | | | | | | | | $V_{OS}$ | | $CH_8$ | | | | | | | |
| | | 143 | | | | | | | | | | 2.5 V | -2.5 V | | | | | | | | | | | $V_{OS}$ | | | $CH_9$ | | | | | | | |
| | | 144 | | | | | | | | | | -2.5 V | 2.5 V | | | | | | | | | | $V_{OS}$ | | | | $CH_{10}$ | | | | | | | |
| | | 145 | | | | | | | | | | 2.5 V | 2.5 V | | | | | | | | | $V_{OS}$ | | | | | $CH_{11}$ | | | | | | | |
| | | 146 | | | | | | | | | | -2.5 V | -2.5 V | | | 2.5 V | | | | | $V_{OS}$ | | | | | | $CH_{12}$ | | | | | | | |
| | | 147 | | | | | | | | | | 2.5 V | -2.5 V | | | | | | | $V_{OS}$ | | | | | | | $CH_{13}$ | | | | | | | |
| | | 148 | | | | | | | | | | -2.5 V | 2.5 V | | | | | | | | | | | | | | $CH_{14}$ | | | | | | | |
| | | 149 | | | | | | | | | | 2.5 V | 2.5 V | | | | | $V_{OS}$ | | | | | | | | | $CH_{15}$ | | 700 | | 900 | | 900 | |
| $R_{ON12}$ | | 150-165 | Same tests and terminal conditions as for tests 134-149, except $V_{IS}$ = -0.9 V and limits are as shown. | | | | | | | | | | | | | | | | | | | | | | | | | | 600 | | 800 | | 400 | |
| $R_{ON13}$ | | 166-181 | Same tests and terminal conditions as for tests 134-149, except $V_{IS}$ = 1.0 V and limits are as shown. | | | | | | | | | | | | | | | | | | | | | | | | | | 500 | | 700 | | 300 | |
| $R_{ON14}$ | | 182-197 | Same tests and terminal conditions as for tests 134-149, except $V_{IS}$ = 2.0 V and limits are as shown. | | | | | | | | | | | | | | | | | | | | | | | | | | | | | | 350 | |
| $R_{ON11}$ | | 198 | $V_{OS}$ | | | | | | | | $V_{IS}$ = -2.0 V | -2.5 V | -2.5 V | -2.5 V | -2.5 V | -2.5 V | -2.5 V | | | | | | | | | 2.5 V | $CO/_I$ | | | | | | 350 | |
| $R_{ON11}$ | | 199 | $V_{OS}$ | | | | | | | $V_{IS}$ = -2.0 V | | 2.5 V | -2.5 V | -2.5 V | -2.5 V | -2.5 V | -2.5 V | | | | | | | | | 2.5 V | $CO/_I$ | | | | | | 350 | |
| $R_{ON11}$ | | 200 | $V_{OS}$ | | | | | | $V_{IS}$ = -2.0 V | | | -2.5 V | 2.5 V | -2.5 V | -2.5 V | -2.5 V | -2.5 V | | | | | | | | | 2.5 V | $CO/_I$ | | | | | | 350 | |

See footnotes at end of table.

TABLE III. Group A inspection for device type 01 - Continued.

| Symbol | MIL-STD-883 method | Cases J, K,Z | Terminal conditions 1/ | | | | | | | | | | | | | | | | | | | | | | | | Measured terminal | Test limits | | | | | | Units |
|---|---|---|---|---|---|---|---|---|---|---|---|---|---|---|---|---|---|---|---|---|---|---|---|---|---|---|---|---|---|---|---|---|---|---|
| | | | 1 | 2 | 3 | 4 | 5 | 6 | 7 | 8 | 9 | 10 | 11 | 12 | 13 | 14 | 15 | 16 | 17 | 18 | 19 | 20 | 21 | 22 | 23 | 24 | | Subgroup 1 $T_A$ = 25°C | | Subgroup 2 $T_A$ = 125°C | | Subgroup 3 $T_A$ = -55°C | | |
| | | Symbol | $CO/_I$ | $CH_7$ | $CH_6$ | $CH_5$ | $CH_4$ | $CH_3$ | $CH_2$ | $CH_1$ | $CH_0$ | A | B | $V_{SS}$ | D | C | INH | $CH_{15}$ | $CH_{14}$ | $CH_{13}$ | $CH_{12}$ | $CH_{11}$ | $CH_{10}$ | $CH_9$ | $CH_8$ | $V_{DD}$ | | | | | | | | |
| | | Test No. | | | | | | | | | | | | | | | | | | | | | | | | | | Min | Max | Min | Max | Min | Max | |
| $R_{ON11}$ | Fig. 6 | 201 | $V_{OS}$ | | | | | $V_{IS}$ = -2.0 V | | | | 2.5 V | 2.5 V | -2.5 V | -2.5 V | -2.5 V | -2.5 V | | | | | | | | | 2.5 V | $CO/_I$ | | 500 | | 700 | | 350 | Ω |
| | | 202 | | | | | $V_{IS}$ = -2.0 V | | | | | -2.5 V | -2.5 V | | | 2.5 V | | | | | | | | | | | | | | | | | | |
| | | 203 | | | | $V_{IS}$ = -2.0 V | | | | | | 2.5 V | -2.5 V | | | | | | | | | | | | | | | | | | | | | |
| | | 204 | | | $V_{IS}$ = -2.0 V | | | | | | | -2.5 V | 2.5 V | | | | | | | | | | | | | | | | | | | | | |
| | | 205 | | $V_{IS}$ = -2.0 V | | | | | | | | 2.5 V | 2.5 V | | | | | | | | | | | | | | | | | | | | | |
| | | 206 | | | | | | | | | | -2.5 V | -2.5 V | | 2.5 V | -2.5 V | | | | | | | | | $V_{IS}$ = -2.0 V | | | | | | | | | |
| | | 207 | | | | | | | | | | 2.5 V | -2.5 V | | | | | | | | | | | $V_{IS}$ = -2.0 V | | | | | | | | | | |
| | | 208 | | | | | | | | | | -2.5 V | 2.5 V | | | | | | | | | | $V_{IS}$ = -2.0 V | | | | | | | | | | | |
| | | 209 | | | | | | | | | | 2.5 V | 2.5 V | | | | | | | | | $V_{IS}$ = -2.0 V | | | | | | | | | | | | |
| | | 210 | | | | | | | | | | -2.5 V | -2.5 V | | | 2.5 V | | | | | $V_{IS}$ = -2.0 V | | | | | | | | | | | | | |
| | | 211 | | | | | | | | | | 2.5 V | -2.5 V | | | | | | | $V_{IS}$ = -2.0 V | | | | | | | | | | | | | | |
| | | 212 | | | | | | | | | | -2.5 V | 2.5 V | | | | | | $V_{IS}$ = -2.0 V | | | | | | | | | | | | | | | |
| | | 213 | | | | | | | | | | 2.5 V | 2.5 V | | | | | $V_{IS}$ = -2.0 V | | | | | | | | | | | | | | | | |
| $R_{ON12}$ | | 214-229 | Same tests and terminal conditions as for tests 198-213, except $V_{IS}$ = -0.9 V and limits are as shown. | | | | | | | | | | | | | | | | | | | | | | | | | | 700 | | 900 | | 500 | |
| $R_{ON13}$ | | 230-245 | Same tests and terminal conditions as for tests 198-213, except $V_{IS}$ = 1.0 V and limits are as shown. | | | | | | | | | | | | | | | | | | | | | | | | | | 600 | | 800 | | 400 | |
| $R_{ON14}$ | | 246-261 | Same tests and terminal conditions as for tests 198-213, except $V_{IS}$ = 2.0 V and limits are as shown. | | | | | | | | | | | | | | | | | | | | | | | | | | 500 | | 700 | | 300 | |
| $R_{ON21}$ | Fig. 7 | 262 | $V_{IS}$ = -5.0 V | | | | | | | | $V_{OS}$ | -5.0 V | -5.0 V | -5.0 V | -5.0 V | -5.0 V | -5.0 V | | | | | | | | | 5.0 V | $CH_0$ | | 200 | | 260 | | 140 | |

See footnotes at end of table.

TABLE III. Group A inspection for device type 01 - Continued.

| Symbol | MIL-STD-883 method | Cases J, K, Z, Y, U | Terminal conditions 1/ | | | | | | | | | | | | | | | | | | | | | | | | Measured terminal | Test limits | | | | | | Units |
|---|---|---|---|---|---|---|---|---|---|---|---|---|---|---|---|---|---|---|---|---|---|---|---|---|---|---|---|---|---|---|---|---|---|---|
| | | | 1 | 2 | 3 | 4 | 5 | 6 | 7 | 8 | 9 | 10 | 11 | 12 | 13 | 14 | 15 | 16 | 17 | 18 | 19 | 20 | 21 | 22 | 23 | 24 | | Subgroup 1 $T_A$ = 25°C | | Subgroup 2 $T_A$ = 125°C | | Subgroup 2 $T_A$ = -55°C | | |
| | | Symbol | CO/I | $CH_7$ | $CH_6$ | $CH_5$ | $CH_4$ | $CH_3$ | $CH_2$ | $CH_1$ | $CH_0$ | A | B | $V_{SS}$ | D | C | INH | $CH_{15}$ | $CH_{14}$ | $CH_{13}$ | $CH_{12}$ | $CH_{11}$ | $CH_{10}$ | $CH_9$ | $CH_8$ | $V_{DD}$ | | Min | Max | Min | Max | Min | Max | |
| | | Test No. | | | | | | | | | | | | | | | | | | | | | | | | | | | | | | | | |
| $R_{ON21}$ | Fig. 7 | 263 | $V_{IS}$ = -5.0 V | | | | | | | $V_{OS}$ | | 5.0 V | -5.0 V | -5.0 V | -5.0 V | -5.0 V | -5.0 V | | | | | | | | | 5.0 V | $CH_1$ | | 200 | | 260 | | 140 | Ω |
| | | 264 | | | | | | | $V_{OS}$ | | | -5.0 V | 5.0 V | | | -5.0 V | | | | | | | | | | | $CH_2$ | | | | | | | |
| | | 265 | | | | | | $V_{OS}$ | | | | 5.0 V | 5.0 V | | | -5.0 V | | | | | | | | | | | $CH_3$ | | | | | | | |
| | | 266 | | | | | $V_{OS}$ | | | | | -5.0 V | -5.0 V | | | 5.0 V | | | | | | | | | | | $CH_4$ | | | | | | | |
| | | 267 | | | | $V_{OS}$ | | | | | | 5.0 V | -5.0 V | | | | | | | | | | | | | | $CH_5$ | | | | | | | |
| | | 268 | | | $V_{OS}$ | | | | | | | -5.0 V | 5.0 V | | | | | | | | | | | | | | $CH_6$ | | | | | | | |
| | | 269 | | $V_{OS}$ | | | | | | | | 5.0 V | 5.0 V | | | | | | | | | | | | | | $CH_7$ | | | | | | | |
| | | 270 | | | | | | | | | | -5.0 V | -5.0 V | | 5.0 V | -5.0 V | | | | | | | | | $V_{OS}$ | | $CH_8$ | | | | | | | |
| | | 271 | | | | | | | | | | 5.0 V | -5.0 V | | | | | | | | | | | $V_{OS}$ | | | $CH_9$ | | | | | | | |
| | | 272 | | | | | | | | | | -5.0 V | 5.0 V | | | | | | | | | | $V_{OS}$ | | | | $CH_{10}$ | | | | | | | |
| | | 273 | | | | | | | | | | 5.0 V | 5.0 V | | | | | | | | | $V_{OS}$ | | | | | $CH_{11}$ | | | | | | | |
| | | 274 | | | | | | | | | | -5.0 V | -5.0 V | | | 5.0 V | | | | | | | | | | | $CH_{12}$ | | | | | | | |
| | | 275 | | | | | | | | | | 5.0 V | -5.0 V | | | | | | | $V_{OS}$ | | | | | | | $CH_{13}$ | | | | | | | |
| | | 276 | | | | | | | | | | -5.0 V | 5.0 V | | | | | | $V_{OS}$ | | | | | | | | $CH_{14}$ | | | | | | | |
| | | 277 | | | | | | | | | | 5.0 V | 5.0 V | | | | | $V_{OS}$ | | | | | | | | | $CH_{15}$ | | | | | | | |
| $R_{ON22}$ | | 278-293 | Same tests and terminal conditions as for tests 262-277, except $V_{IS}$ = -3.0 V and limits are as shown. | | | | | | | | | | | | | | | | | | | | | | | | | | 250 | | 325 | | 175 | | |
| $R_{ON23}$ | | 294-309 | Same tests and terminal conditions as for tests 262-277, except $V_{IS}$ = 3.5 V and limits are as shown. | | | | | | | | | | | | | | | | | | | | | | | | | | 200 | | 260 | | 140 | | |
| $R_{ON24}$ | | 310-325 | Same tests and terminal conditions as for tests 262-277, except $V_{IS}$ = 5.0 V and limits are as shown. | | | | | | | | | | | | | | | | | | | | | | | | | | | | | | | | |

See footnotes at end of table.

TABLE III. Group A inspection for device type 01 - Continued.

| Symbol | MIL-STD-883 method | Cases J, K,Z,Y,U | Terminal conditions 1/ | | | | | | | | | | | | | | | | | | | | | | | Measured terminal | Test limits | | | | | | Units |
|---|---|---|---|---|---|---|---|---|---|---|---|---|---|---|---|---|---|---|---|---|---|---|---|---|---|---|---|---|---|---|---|---|---|
| | | | 1 | 2 | 3 | 4 | 5 | 6 | 7 | 8 | 9 | 10 | 11 | 12 | 13 | 14 | 15 | 16 | 17 | 18 | 19 | 20 | 21 | 22 | 23 | 24 | | Subgroup 1 $T_A$ = 25°C | | Subgroup 2 $T_A$ = 125°C | | Subgroup 3 $T_A$ = -55°C | | |
| | | Symbol | $CO/_I$ | $CH_7$ | $CH_6$ | $CH_5$ | $CH_4$ | $CH_3$ | $CH_2$ | $CH_1$ | $CH_0$ | A | B | $V_{SS}$ | D | C | INH | $CH_{15}$ | $CH_{14}$ | $CH_{13}$ | $CH_{12}$ | $CH_{11}$ | $CH_{10}$ | $CH_9$ | $CH_8$ | $V_{DD}$ | | Min | Max | Min | Max | Min | Max | |
| | | Test No. | | | | | | | | | | | | | | | | | | | | | | | | | | | | | | | |
| $R_{ON21}$ | Fig. 7 | 326 | $V_{OS}$ | | | | | | | | $V_{IS}$ = -5.0 V | -5.0 V | -5.0 V | -5.0 V | -5.0 V | -5.0 V | -5.0 V | | | | | | | | | 5.0 V | $CO/_I$ | | 200 | | 260 | | 140 | Ω |
| | | 327 | | | | | | | | $V_{IS}$ = -5.0 V | | 5.0 V | -5.0 V | | | | | | | | | | | | | | | | | | | | |
| | | 328 | | | | | | | $V_{IS}$ = -5.0 V | | | -5.0 V | 5.0 V | | | | | | | | | | | | | | | | | | | | |
| | | 329 | | | | | | $V_{IS}$ = -5.0 V | | | | 5.0 V | 5.0 V | | | | | | | | | | | | | | | | | | | | |
| | | 330 | | | | | $V_{IS}$ = -5.0 V | | | | | -5.0 V | -5.0 V | | | 5.0 V | | | | | | | | | | | | | | | | | |
| | | 331 | | | | $V_{IS}$ = -5.0 V | | | | | | 5.0 V | -5.0 V | | | | | | | | | | | | | | | | | | | | |
| | | 332 | | | $V_{IS}$ = -5.0 V | | | | | | | -5.0 V | 5.0 V | | | | | | | | | | | | | | | | | | | | |
| | | 333 | | $V_{IS}$ = -5.0 V | | | | | | | | 5.0 V | 5.0 V | | | | | | | | | | | | | | | | | | | | |
| | | 334 | | | | | | | | | | -5.0 V | -5.0 V | | 5.0 V | -5.0 V | | | | | | | | | | | | | | | | | |
| | | 335 | | | | | | | | | | 5.0 V | -5.0 V | | | | | | | | | | | | $V_{IS}$ = -5.0 V | | | | | | | | | |
| | | 336 | | | | | | | | | | -5.0 V | 5.0 V | | | | | | | | | | | $V_{IS}$ = -5.0 V | | | | | | | | | | |
| | | 337 | | | | | | | | | | 5.0 V | 5.0 V | | | | | | | | | | $V_{IS}$ = -5.0 V | | | | | | | | | | |
| | | 338 | | | | | | | | | | -5.0 V | -5.0 V | | | 5.0 V | | | | | | $V_{IS}$ = -5.0 V | | | | | | | | | | | |
| | | 339 | | | | | | | | | | 5.0 V | -5.0 V | | | | | | | | $V_{IS}$ = -5.0 V | | | | | | | | | | | | |
| | | 340 | | | | | | | | | | -5.0 V | 5.0 V | | | | | | | $V_{IS}$ = -5.0 V | | | | | | | | | | | | | |
| | | 341 | | | | | | | | | | 5.0 V | 5.0 V | | | | | $V_{IS}$ = -5.0 V | | | | | | | | | | | | | | | |

See footnotes at end of table.

TABLE III. Group A inspection for device type 01 - Continued.

| Symbol | MIL-STD-883 method | Cases J, K, Z, Y, U | Terminal conditions 1/ | | | | | | | | | | | | | | | | | | | | | | | | Measured terminal | Test limits | | | | | | Units |
|---|---|---|---|---|---|---|---|---|---|---|---|---|---|---|---|---|---|---|---|---|---|---|---|---|---|---|---|---|---|---|---|---|---|---|
| | | | 1 | 2 | 3 | 4 | 5 | 6 | 7 | 8 | 9 | 10 | 11 | 12 | 13 | 14 | 15 | 16 | 17 | 18 | 19 | 20 | 21 | 22 | 23 | 24 | | Subgroup 1 $T_A$ = 25°C | | Subgroup 2 $T_A$ = 125°C | | Subgroup 3 $T_A$ = -55°C | | |
| | | Symbol | $CO/_I$ | $CH_7$ | $CH_6$ | $CH_5$ | $CH_4$ | $CH_3$ | $CH_2$ | $CH_1$ | $CH_0$ | A | B | $V_{SS}$ | D | C | INH | $CH_{15}$ | $CH_{14}$ | $CH_{13}$ | $CH_{12}$ | $CH_{11}$ | $CH_{10}$ | $CH_9$ | $CH_8$ | $V_{DD}$ | | Min | Max | Min | Max | Min | Max | |
| | | Test No. | | | | | | | | | | | | | | | | | | | | | | | | | | | | | | | | |
| $R_{ON22}$ | Fig. 7 | 342-357 | Same tests and terminal conditions as for tests 326-241, except $V_{IS}$ = -3.0 V and limits are as shown. | | | | | | | | | | | | | | | | | | | | | | | | | | 250 | | 325 | | 175 | Ω |
| $R_{ON23}$ | Fig. 7 | 358-373 | Same tests and terminal conditions as for tests 326-341, except $V_{IS}$ = 3.5 V and limits are as shown. | | | | | | | | | | | | | | | | | | | | | | | | | | 250 | | 325 | | 175 | |
| $R_{ON24}$ | Fig. 7 | 374-389 | Same tests and terminal conditions as for tests 326-341, except $V_{IS}$ = 5.0 V and limits are as shown. | | | | | | | | | | | | | | | | | | | | | | | | | | 200 | | 260 | | 140 | |
| $R_{ON31}$ | Fig. 8 | 390 | $V_{IS}$ = -7.5 V | | | | | | | | $V_{OS}$ | -7.5 V | -7.5 V | -7.5 V | -7.5 V | -7.5 V | -7.5 V | | | | | | | | | 7.5 V | $CH_0$ | | 150 | | 200 | | 100 | |
| | | 391 | | | | | | | | $V_{OS}$ | | 7.5 V | -7.5 V | | | | | | | | | | | | | | $CH_1$ | | | | | | | |
| | | 392 | | | | | | | $V_{OS}$ | | | -7.5 V | 7.5 V | | | | | | | | | | | | | | $CH_2$ | | | | | | | |
| | | 393 | | | | | | $V_{OS}$ | | | | 7.5 V | 7.5 V | | | | | | | | | | | | | | $CH_3$ | | | | | | | |
| | | 394 | | | | | $V_{OS}$ | | | | | -7.5 V | -7.5 V | | | 7.5 V | | | | | | | | | | | $CH_4$ | | | | | | | |
| | | 395 | | | | $V_{OS}$ | | | | | | 7.5 V | -7.5 V | | | | | | | | | | | | | | $CH_5$ | | | | | | | |
| | | 396 | | | $V_{OS}$ | | | | | | | -7.5 V | 7.5 V | | | | | | | | | | | | | | $CH_6$ | | | | | | | |
| | | 397 | | $V_{OS}$ | | | | | | | | 7.5 V | 7.5 V | | | | | | | | | | | | | | $CH_7$ | | | | | | | |
| | | 398 | | | | | | | | | | -7.5 V | -7.5 V | | 7.5 V | -7.5 V | | | | | | | | | $V_{OS}$ | | $CH_8$ | | | | | | | |
| | | 399 | | | | | | | | | | 7.5 V | -7.5 V | | | | | | | | | | | $V_{OS}$ | | | $CH_9$ | | | | | | | |
| | | 400 | | | | | | | | | | -7.5 V | 7.5 V | | | | | | | | | | $V_{OS}$ | | | | $CH_{10}$ | | | | | | | |
| | | 401 | | | | | | | | | | 7.5 V | 7.5 V | | | | | | | | | $V_{OS}$ | | | | | $CH_{11}$ | | | | | | | |
| | | 402 | | | | | | | | | | -7.5 V | -7.5 V | | | 7.5 V | | | | | $V_{OS}$ | | | | | | $CH_{12}$ | | | | | | | |
| | | 403 | | | | | | | | | | 7.5 V | -7.5 V | | | | | | | $V_{OS}$ | | | | | | | $CH_{13}$ | | | | | | | |
| | | 404 | | | | | | | | | | -7.5 V | 7.5 V | | | | | | $V_{OS}$ | | | | | | | | $CH_{14}$ | | | | | | | |
| | | 405 | | | | | | | | | | 7.5 V | 7.5 V | | | | | | | | | | | | | | $CH_{15}$ | | 170 | | 230 | | 120 | |
| $R_{ON32}$ | | 406-421 | Same tests and terminal conditions as for tests 390-405, except $V_{IS}$ = -5.0 V and limits are as shown. | | | | | | | | | | | | | | | | | | | | | | | | | | 170 | | 230 | | 120 | |
| $R_{ON33}$ | | 422-437 | Same tests and terminal conditions as for tests 390-405, except $V_{IS}$ = 0 V and limits are as shown. | | | | | | | | | | | | | | | | | | | | | | | | | | 170 | | 230 | | 120 | |
| $R_{ON34}$ | | 438-453 | Same tests and terminal conditions as for tests 390-405, except $V_{IS}$ = 6.0 V and limits are as shown. | | | | | | | | | | | | | | | | | | | | | | | | | | 150 | | 200 | | 100 | |
| $R_{ON35}$ | | 454-469 | Same tests and terminal conditions as for tests 390-405, except $V_{IS}$ = 7.5 V and limits are as shown. | | | | | | | | | | | | | | | | | | | | | | | | | | | | | | | |

See footnotes at end of table.

TABLE III. Group A inspection for device type 01 - Continued.

| Symbol | MIL-STD-883 method | Cases J, K, Z, Y, U | Terminal conditions 1/ | | | | | | | | | | | | | | | | | | | | | | | Measured terminal | Test limits | | | | | | Units |
|---|---|---|---|---|---|---|---|---|---|---|---|---|---|---|---|---|---|---|---|---|---|---|---|---|---|---|---|---|---|---|---|---|---|
| | | | 1 | 2 | 3 | 4 | 5 | 6 | 7 | 8 | 9 | 10 | 11 | 12 | 13 | 14 | 15 | 16 | 17 | 18 | 19 | 20 | 21 | 22 | 23 | 24 | | Subgroup 1 $T_A$ = 25°C | | Subgroup 2 $T_A$ = 125°C | | Subgroup 3 $T_A$ = -55°C | | |
| | | Symbol | $CO/_1$ | $CH_7$ | $CH_6$ | $CH_5$ | $CH_4$ | $CH_3$ | $CH_2$ | $CH_1$ | $CH_0$ | A | B | $V_{SS}$ | D | C | INH | $CH_{15}$ | $CH_{14}$ | $CH_{13}$ | $CH_{12}$ | $CH_{11}$ | $CH_{10}$ | $CH_9$ | $CH_8$ | $V_{DD}$ | | Min | Max | Min | Max | Min | Max | |
| | | Test No. | | | | | | | | | | | | | | | | | | | | | | | | | | | | | | | |
| $R_{ON31}$ | Fig. 8 | 470 | $V_{OS}$ | | | | | | | | $V_{IS}$ = -7.5 V | -7.5 V | -7.5 V | -7.5 V | -7.5 V | -7.5 V | -7.5 V | | | | | | | | | 7.5 V | $CO/_1$ | | 150 | | 200 | | 100 | Ω |
| | | 471 | | | | | | | | $V_{IS}$ = -7.5 V | | 7.5 V | -7.5 V | | | | | | | | | | | | | | | | | | | | |
| | | 472 | | | | | | | $V_{IS}$ = -7.5 V | | | -7.5 V | 7.5 V | | | | | | | | | | | | | | | | | | | | |
| | | 473 | | | | | | $V_{IS}$ = -7.5 V | | | | 7.5 V | 7.5 V | | | | | | | | | | | | | | | | | | | | |
| | | 474 | | | | | $V_{IS}$ = -7.5 V | | | | | -7.5 V | -7.5 V | | | 7.5 V | | | | | | | | | | | | | | | | | |
| | | 475 | | | | $V_{IS}$ = -7.5 V | | | | | | 7.5 V | -7.5 V | | | | | | | | | | | | | | | | | | | | |
| | | 476 | | | $V_{IS}$ = -7.5 V | | | | | | | -7.5 V | 7.5 V | | | | | | | | | | | | | | | | | | | | |
| | | 477 | | $V_{IS}$ = -7.5 V | | | | | | | | 7.5 V | 7.5 V | | | | | | | | | | | | | | | | | | | | |
| | | 478 | | | | | | | | | | -7.5 V | -7.5 V | | 7.5 V | -7.5 V | | | | | | | | | $V_{IS}$ = -7.5 V | | | | | | | | | |
| | | 479 | | | | | | | | | | 7.5 V | -7.5 V | | | | | | | | | | | $V_{IS}$ = -7.5 V | | | | | | | | | |
| | | 480 | | | | | | | | | | -7.5 V | 7.5 V | | | | | | | | | | $V_{IS}$ = -7.5 V | | | | | | | | | | |
| | | 481 | | | | | | | | | | 7.5 V | 7.5 V | | | | | | | | | $V_{IS}$ = -7.5 V | | | | | | | | | | | |
| | | 482 | | | | | | | | | | -7.5 V | -7.5 V | | | 7.5 V | | | | | $V_{IS}$ = -7.5 V | | | | | | | | | | | | |
| | | 483 | | | | | | | | | | 7.5 V | -7.5 V | | | | | | | $V_{IS}$ = -7.5 V | | | | | | | | | | | | | |
| | | 484 | | | | | | | | | | -7.5 V | 7.5 V | | | | | | $V_{IS}$ = -7.5 V | | | | | | | | | | | | | | |
| | | 485 | | | | | | | | | | 7.5 V | 7.5 V | | | | | $V_{IS}$ = -7.5 V | | | | | | | | | | | | | | | |

See footnotes at end of table.

TABLE III. Group A inspection for device type 01 - Continued.

| Symbol | MIL-STD-883 method | Cases J, K, Z, Y, U | Terminal conditions 1/ | | | | | | | | | | | | | | | | | | | | | | | | Measured terminal | Test limits | | | | | | Units |
|---|---|---|---|---|---|---|---|---|---|---|---|---|---|---|---|---|---|---|---|---|---|---|---|---|---|---|---|---|---|---|---|---|---|---|
| | | | 1 | 2 | 3 | 4 | 5 | 6 | 7 | 8 | 9 | 10 | 11 | 12 | 13 | 14 | 15 | 16 | 17 | 18 | 19 | 20 | 21 | 22 | 23 | 24 | | Subgroup 1 $T_A$ = 25°C | | Subgroup 2 $T_A$ = 125°C | | Subgroup 3 $T_A$ = -55°C | | |
| | | Symbol | $CO/_I$ | $CH_7$ | $CH_6$ | $CH_5$ | $CH_4$ | $CH_3$ | $CH_2$ | $CH_1$ | $CH_0$ | A | B | $V_{SS}$ | D | C | INH | $CH_{15}$ | $CH_{14}$ | $CH_{13}$ | $CH_{12}$ | $CH_{11}$ | $CH_{10}$ | $CH_9$ | $CH_8$ | $V_{DD}$ | | Min | Max | Min | Max | Min | Max | |
| | | Test No. | | | | | | | | | | | | | | | | | | | | | | | | | | | | | | | | |
| $R_{ON32}$ | Fig. 8 | 486-501 | Same tests and terminal conditions as for tests 470-485, except $V_{IS}$ = -5.0 V and limits are as shown. | | | | | | | | | | | | | | | | | | | | | | | | | | 170 | | 230 | | 120 | Ω |
| $R_{ON33}$ | | 502-517 | Same tests and terminal conditions as for tests 470-485, except $V_{IS}$ = 0 V and limits are as shown. | | | | | | | | | | | | | | | | | | | | | | | | | | 170 | | 230 | | 120 | |
| $R_{ON34}$ | | 518-533 | Same tests and terminal conditions as for tests 470-485, except $V_{IS}$ = 6.0 V and limits are as shown. | | | | | | | | | | | | | | | | | | | | | | | | | | 150 | | 200 | | 100 | |
| $R_{ON35}$ | | 534-549 | Same tests and terminal conditions as for tests 470-485, except $V_{IS}$ = 7.5 V and limits are as shown. | | | | | | | | | | | | | | | | | | | | | | | | | | | | | | | |
| $V_{IH1}$ | 7/ | 550 | 5.0 V | | | | | | | | | GND | GND | GND | GND | GND | GND | | | | | | | | | 5.0 V | $CH_0$ | 4.5 | | 4.5 | | 4.5 | | Vdc |
| | | 551 | | | | | | | | | | 3.5 V | GND | | | | | | | | | | | | | | $CH_1$ | | | | | | | |
| | | 552 | | | | | | | | | | GND | 3.5 V | | | | | | | | | | | | | | $CH_2$ | | | | | | | |
| | | 553 | | | | | | | | | | 3.5 V | 3.5 V | | | 3.5 V | | | | | | | | | | | $CH_3$ | | | | | | | |
| | | 554 | | | | | | | | | | GND | GND | | | | | | | | | | | | | | $CH_4$ | | | | | | | |
| | | 555 | | | | | | | | | | 3.5 V | GND | | | | | | | | | | | | | | $CH_5$ | | | | | | | |
| | | 556 | | | | | | | | | | GND | 3.5 V | | | | | | | | | | | | | | $CH_6$ | | | | | | | |
| | | 557 | | | | | | | | | | 3.5 V | 3.5 V | | | | | | | | | | | | | | $CH_7$ | | | | | | | |
| | | 558 | | | | | | | | | | GND | GND | | 3.5 V | GND | | | | | | | | | | | $CH_8$ | | | | | | | |
| | | 559 | | | | | | | | | | 3.5 V | GND | | | | | | | | | | | | | | $CH_9$ | | | | | | | |
| | | 560 | | | | | | | | | | GND | 3.5 V | | | | | | | | | | | | | | $CH_{10}$ | | | | | | | |
| | | 561 | | | | | | | | | | 3.5 V | 3.5 V | | | | | | | | | | | | | | $CH_{11}$ | | | | | | | |
| | | 562 | | | | | | | | | | GND | GND | | | 3.5 V | | | | | | | | | | | $CH_{12}$ | | | | | | | |
| | | 563 | | | | | | | | | | 3.5 V | GND | | | | | | | | | | | | | | $CH_{13}$ | | | | | | | |
| | | 564 | | | | | | | | | | GND | 3.5 V | | | | | | | | | | | | | | $CH_{14}$ | | | | | | | |
| | | 565 | | | | | | | | | | 3.5 V | 3.5 V | | | | | | | | | | | | | | $CH_{15}$ | | | | | | | |
| $V_{IH2}$ | | 566 | 10.0 V | | | | | | | | | GND | GND | | GND | GND | | | | | | | | | | 10.0 V | $CH_0$ | 9.0 | | 9.0 | | 9.0 | | |
| | | 567 | | | | | | | | | | 7.0 V | GND | | | | | | | | | | | | | | $CH_1$ | | | | | | | |
| | | 568 | | | | | | | | | | GND | 7.0 V | | | | | | | | | | | | | | $CH_2$ | | | | | | | |
| | | 569 | | | | | | | | | | 7.0 V | 7.0 V | | | | | | | | | | | | | | $CH_3$ | | | | | | | |
| | | 570 | | | | | | | | | | GND | GND | | | 7.0 V | | | | | | | | | | | $CH_4$ | | | | | | | |

See footnotes at end of table.

TABLE III. Group A inspection for device type 01 - Continued.

| Symbol | MIL-STD-883 method | Cases J, K,Z,Y,U | Terminal conditions 1/ | | | | | | | | | | | | | | | | | | | | | | | | | Measured terminal | Test limits | | | | | | Units |
|---|---|---|---|---|---|---|---|---|---|---|---|---|---|---|---|---|---|---|---|---|---|---|---|---|---|---|---|---|---|---|---|---|---|---|---|
| | | | 1 | 2 | 3 | 4 | 5 | 6 | 7 | 8 | 9 | 10 | 11 | 12 | 13 | 14 | 15 | 16 | 17 | 18 | 19 | 20 | 21 | 22 | 23 | 24 | | Subgroup 1 $T_A$ = 25°C | | Subgroup 2 $T_A$ = 125°C | | Subgroup 3 $T_A$ = -55°C | | |
| | | Symbol | $CO/_I$ | $CH_7$ | $CH_6$ | $CH_5$ | $CH_4$ | $CH_3$ | $CH_2$ | $CH_1$ | $CH_0$ | A | B | $V_{SS}$ | D | C | INH | $CH_{15}$ | $CH_{14}$ | $CH_{13}$ | $CH_{12}$ | $CH_{11}$ | $CH_{10}$ | $CH_9$ | $CH_8$ | $V_{DD}$ | | Min | Max | Min | Max | Min | Max | |
| | | Test No. | | | | | | | | | | | | | | | | | | | | | | | | | | | | | | | | | |
| $V_{IH2}$ | 7/ | 571 | 10.0 V | | | | | | | | | 7.0 V | GND | GND | GND | 7.0 V | GND | | | | | | | | | 10.0 V | $CH_5$ | 9.0 | | 9.0 | | 9.0 | | Vdc |
| | | 572 | | | | | | | | | | GND | 7.0 V | | GND | 7.0 V | | | | | | | | | | | $CH_6$ | | | | | | | |
| | | 573 | | | | | | | | | | 7.0 V | 7.0 V | | GND | 7.0 V | | | | | | | | | | | $CH_7$ | | | | | | | |
| | | 574 | | | | | | | | | | GND | GND | | 7.0 V | GND | | | | | | | | | | | $CH_8$ | | | | | | | |
| | | 575 | | | | | | | | | | 7.0 V | GND | | | | | | | | | | | | | | $CH_9$ | | | | | | | |
| | | 576 | | | | | | | | | | GND | 7.0 V | | | | | | | | | | | | | | $CH_{10}$ | | | | | | | |
| | | 577 | | | | | | | | | | 7.0 V | 7.0 V | | | | | | | | | | | | | | $CH_{11}$ | | | | | | | |
| | | 578 | | | | | | | | | | GND | GND | | | 7.0 V | | | | | | | | | | | $CH_{12}$ | | | | | | | |
| | | 579 | | | | | | | | | | 7.0 V | GND | | | | | | | | | | | | | | $CH_{13}$ | | | | | | | |
| | | 580 | | | | | | | | | | GND | 7.0 V | | | | | | | | | | | | | | $CH_{14}$ | | | | | | | |
| | | 581 | | | | | | | | | | 7.0 V | 7.0 V | | | | | | | | | | | | | | $CH_{15}$ | | | | | | | |
| $V_{IH3}$ | | 582 | 15.0 V | | | | | | | | | GND | GND | | GND | GND | | | | | | | | | | 15.0 V | $CH_0$ | 13.5 | | 13.5 | | 13.5 | | |
| | | 583 | | | | | | | | | | 11.0 V | GND | | | | | | | | | | | | | | $CH_1$ | | | | | | | |
| | | 584 | | | | | | | | | | GND | 11.0 V | | | | | | | | | | | | | | $CH_2$ | | | | | | | |
| | | 585 | | | | | | | | | | 11.0 V | 11.0 V | | | | | | | | | | | | | | $CH_3$ | | | | | | | |
| | | 586 | | | | | | | | | | GND | GND | | | 11.0 V | | | | | | | | | | | $CH_4$ | | | | | | | |
| | | 587 | | | | | | | | | | 11.0 V | GND | | | | | | | | | | | | | | $CH_5$ | | | | | | | |
| | | 588 | | | | | | | | | | GND | 11.0 V | | | | | | | | | | | | | | $CH_6$ | | | | | | | |
| | | 589 | | | | | | | | | | 11.0 V | 11.0 V | | | | | | | | | | | | | | $CH_7$ | | | | | | | |
| | | 590 | | | | | | | | | | GND | GND | | 11.0 V | GND | | | | | | | | | | | $CH_8$ | | | | | | | |
| | | 591 | | | | | | | | | | 11.0 V | GND | | | | | | | | | | | | | | $CH_9$ | | | | | | | |
| | | 592 | | | | | | | | | | GND | 11.0 V | | | | | | | | | | | | | | $CH_{10}$ | | | | | | | |
| | | 593 | | | | | | | | | | 11.0 V | 11.0 V | | | | | | | | | | | | | | $CH_{11}$ | | | | | | | |
| | | 594 | | | | | | | | | | GND | GND | | | 11.0 V | | | | | | | | | | | $CH_{12}$ | | | | | | | |
| | | 595 | | | | | | | | | | 11.0 V | GND | | | | | | | | | | | | | | $CH_{13}$ | | | | | | | |
| | | 596 | | | | | | | | | | GND | 11.0 V | | | | | | | | | | | | | | $CH_{14}$ | | | | | | | |
| | | 597 | | | | | | | | | | 11.0 V | 11.0 V | | | | | | | | | | | | | | $CH_{15}$ | | | | | | | |

See footnotes at end of table.

TABLE III. Group A inspection for device type 01 - Continued.

| Symbol | MIL-STD-883 method | Cases J, K, Z, Y, U | Terminal conditions 1/ | | | | | | | | | | | | | | | | | | | | | | | | Measured terminal | Test limits | | | | | | Units |
|---|---|---|---|---|---|---|---|---|---|---|---|---|---|---|---|---|---|---|---|---|---|---|---|---|---|---|---|---|---|---|---|---|---|---|
| | | | 1 | 2 | 3 | 4 | 5 | 6 | 7 | 8 | 9 | 10 | 11 | 12 | 13 | 14 | 15 | 16 | 17 | 18 | 19 | 20 | 21 | 22 | 23 | 24 | | Subgroup 1 $T_A$ = 25°C | | Subgroup 2 $T_A$ = 125°C | | Subgroup 3 $T_A$ = -55°C | | |
| | | Symbol | $CO/_I$ | $CH_7$ | $CH_6$ | $CH_5$ | $CH_4$ | $CH_3$ | $CH_2$ | $CH_1$ | $CH_0$ | A | B | $V_{SS}$ | D | C | INH | $CH_{15}$ | $CH_{14}$ | $CH_{13}$ | $CH_{12}$ | $CH_{11}$ | $CH_{10}$ | $CH_9$ | $CH_8$ | $V_{DD}$ | | Min | Max | Min | Max | Min | Max | |
| | | Test No. | | | | | | | | | | | | | | | | | | | | | | | | | | | | | | | | |
| $V_{IL1}$ | 7/ | 598 | 5.0 V | | | | | | | | | GND | GND | GND | GND | GND | 5.0 V | | | | | | | | | 5.0 V | $CH_0$ | | 0.5 | | 0.5 | | 0.5 | Vdc |
| | | 599 | | | | | | | | | | 1.5 V | GND | | | | | | | | | | | | | | $CH_1$ | | | | | | | |
| | | 600 | | | | | | | | | | GND | 1.5 V | | | | | | | | | | | | | | $CH_2$ | | | | | | | |
| | | 601 | | | | | | | | | | 1.5 V | 1.5 V | | | | | | | | | | | | | | $CH_3$ | | | | | | | |
| | | 602 | | | | | | | | | | GND | GND | | | 1.5 V | | | | | | | | | | | $CH_4$ | | | | | | | |
| | | 603 | | | | | | | | | | 1.5 V | GND | | | | | | | | | | | | | | $CH_5$ | | | | | | | |
| | | 604 | | | | | | | | | | GND | 1.5 V | | | | | | | | | | | | | | $CH_6$ | | | | | | | |
| | | 605 | | | | | | | | | | 1.5 V | 1.5 V | | | | | | | | | | | | | | $CH_7$ | | | | | | | |
| | | 606 | | | | | | | | | | GND | GND | | 1.5 V | GND | | | | | | | | | | | $CH_8$ | | | | | | | |
| | | 607 | | | | | | | | | | 1.5 V | GND | | | | | | | | | | | | | | $CH_9$ | | | | | | | |
| | | 608 | | | | | | | | | | GND | 1.5 V | | | | | | | | | | | | | | $CH_{10}$ | | | | | | | |
| | | 609 | | | | | | | | | | 1.5 V | 1.5 V | | | | | | | | | | | | | | $CH_{11}$ | | | | | | | |
| | | 610 | | | | | | | | | | GND | GND | | | 1.5 V | | | | | | | | | | | $CH_{12}$ | | | | | | | |
| | | 611 | | | | | | | | | | 1.5 V | GND | | | | | | | | | | | | | | $CH_{13}$ | | | | | | | |
| | | 612 | | | | | | | | | | GND | 1.5 V | | | | | | | | | | | | | | $CH_{14}$ | | | | | | | |
| | | 613 | | | | | | | | | | 1.5 V | 1.5 V | | | | | | | | | | | | | | $CH_{15}$ | | | | | | | |
| $V_{IL2}$ | | 614 | 10.0 V | | | | | | | | | GND | GND | | GND | GND | 10.0 V | | | | | | | | | 10.0 V | $CH_0$ | | 1.0 | | 1.0 | | 1.0 | |
| | | 615 | | | | | | | | | | 3.0 V | GND | | | | | | | | | | | | | | $CH_1$ | | | | | | | |
| | | 616 | | | | | | | | | | GND | 3.0 V | | | | | | | | | | | | | | $CH_2$ | | | | | | | |
| | | 617 | | | | | | | | | | 3.0 V | 3.0 V | | | | | | | | | | | | | | $CH_3$ | | | | | | | |
| | | 618 | | | | | | | | | | GND | GND | | | 3.0 V | | | | | | | | | | | $CH_4$ | | | | | | | |
| | | 619 | | | | | | | | | | 3.0 V | GND | | | | | | | | | | | | | | $CH_5$ | | | | | | | |
| | | 620 | | | | | | | | | | GND | 3.0 V | | | | | | | | | | | | | | $CH_6$ | | | | | | | |
| | | 621 | | | | | | | | | | 3.0 V | 3.0 V | | | | | | | | | | | | | | $CH_7$ | | | | | | | |
| | | 622 | | | | | | | | | | GND | GND | | 3.0 V | GND | | | | | | | | | | | $CH_8$ | | | | | | | |
| | | 623 | | | | | | | | | | 3.0 V | GND | | 3.0 V | GND | | | | | | | | | | | $CH_9$ | | | | | | | |
| | | 624 | | | | | | | | | | GND | 3.0 V | | 3.0 V | GND | | | | | | | | | | | $CH_{10}$ | | | | | | | |

See footnotes at end of table.

TABLE III. Group A inspection for device type 01 - Continued.

| Symbol | MIL-STD-883 method | Cases J, K,Z,Y,U | Terminal conditions 1/ | | | | | | | | | | | | | | | | | | | | | | | | | Measured terminal | Test limits | | | | | | Units |
|---|---|---|---|---|---|---|---|---|---|---|---|---|---|---|---|---|---|---|---|---|---|---|---|---|---|---|---|---|---|---|---|---|---|---|---|
| | | | 1 | 2 | 3 | 4 | 5 | 6 | 7 | 8 | 9 | 10 | 11 | 12 | 13 | 14 | 15 | 16 | 17 | 18 | 19 | 20 | 21 | 22 | 23 | 24 | | Subgroup 1 $T_A$ = 25°C | | Subgroup 2 $T_A$ = 125°C | | Subgroup 3 $T_A$ = -55°C | | |
| | | Symbol | $CO/_I$ | $CH_7$ | $CH_6$ | $CH_5$ | $CH_4$ | $CH_3$ | $CH_2$ | $CH_1$ | $CH_0$ | A | B | $V_{SS}$ | D | C | INH | $CH_{15}$ | $CH_{14}$ | $CH_{13}$ | $CH_{12}$ | $CH_{11}$ | $CH_{10}$ | $CH_9$ | $CH_8$ | $V_{DD}$ | | Min | Max | Min | Max | Min | Max | |
| | | Test No. | | | | | | | | | | | | | | | | | | | | | | | | | | | | | | | | | |
| $V_{IL2}$ | 7/ | 625 | 10.0 V | | | | | | | | | 3.0 V | 3.0 V | GND | 3.0 V | GND | 10.0 V | | | | | | | | | 10.0 V | $CH_{11}$ | | 1.0 | | 1.0 | | 1.0 | Vdc |
| | | 626 | | | | | | | | | | GND | GND | | | 3.0 V | | | | | | | | | | | $CH_{12}$ | | | | | | | |
| | | 627 | | | | | | | | | | 3.0 V | GND | | | | | | | | | | | | | | $CH_{13}$ | | | | | | | |
| | | 628 | | | | | | | | | | GND | 3.0 V | | | | | | | | | | | | | | $CH_{14}$ | | | | | | | |
| | | 629 | | | | | | | | | | 3.0 V | 3.0 V | | | | | | | | | | | | | | $CH_{15}$ | | | | | | | |
| $V_{IL3}$ | | 630 | 15.0 V | | | | | | | | | GND | GND | | GND | GND | 15.0 V | | | | | | | | | 15.0 V | $CH_0$ | | 1.5 | | 1.5 | | 1.5 | |
| | | 631 | | | | | | | | | | 4.0 V | GND | | | | | | | | | | | | | | $CH_1$ | | | | | | | |
| | | 632 | | | | | | | | | | GND | 4.0 V | | | | | | | | | | | | | | $CH_2$ | | | | | | | |
| | | 633 | | | | | | | | | | 4.0 V | 4.0 V | | | | | | | | | | | | | | $CH_3$ | | | | | | | |
| | | 634 | | | | | | | | | | GND | GND | | | 4.0 V | | | | | | | | | | | $CH_4$ | | | | | | | |
| | | 635 | | | | | | | | | | 4.0 V | GND | | | | | | | | | | | | | | $CH_5$ | | | | | | | |
| | | 636 | | | | | | | | | | GND | 4.0 V | | | | | | | | | | | | | | $CH_6$ | | | | | | | |
| | | 637 | | | | | | | | | | 4.0 V | 4.0 V | | | | | | | | | | | | | | $CH_7$ | | | | | | | |
| | | 638 | | | | | | | | | | GND | GND | | 4.0 V | GND | | | | | | | | | | | $CH_8$ | | | | | | | |
| | | 639 | | | | | | | | | | 4.0 V | GND | | | | | | | | | | | | | | $CH_9$ | | | | | | | |
| | | 640 | | | | | | | | | | GND | 4.0 V | | | | | | | | | | | | | | $CH_{10}$ | | | | | | | |
| | | 641 | | | | | | | | | | 4.0 V | 4.0 V | | | | | | | | | | | | | | $CH_{11}$ | | | | | | | |
| | | 642 | | | | | | | | | | GND | GND | | | 4.0 V | | | | | | | | | | | $CH_{12}$ | | | | | | | |
| | | 643 | | | | | | | | | | 4.0 V | GND | | | | | | | | | | | | | | $CH_{13}$ | | | | | | | |
| | | 644 | | | | | | | | | | GND | 4.0 V | | | | | | | | | | | | | | $CH_{14}$ | | | | | | | |
| | | 645 | | | | | | | | | | 4.0 V | 4.0 V | | | | | | | | | | | | | | $CH_{15}$ | | | | | | | |
| $I_{DOFF}$ | Fig. 9 | 646 | 5.0 V | GND | GND | GND | GND | GND | GND | GND | GND | GND | GND | | GND | GND | 5.0 V | GND | GND | GND | GND | GND | GND | GND | GND | 5.0 V | $CO/_I$ | | ±100 | | ±100 | | ±100 | nA |
| | | 647 | | | | | | | | | GND | | | | | | | | | | | | | | | | $CH_0$ | | | | | | | |
| | | 648 | | | | | | | | GND | | | | | | | | | | | | | | | | | $CH_1$ | | | | | | | |
| | | 649 | | | | | | | GND | | | | | | | | | | | | | | | | | | $CH_2$ | | | | | | | |
| | | 650 | | | | | | GND | | | | | | | | | | | | | | | | | | | $CH_3$ | | | | | | | |
| | | 651 | | | | | GND | | | | | | | | | | | | | | | | | | | | $CH_4$ | | | | | | | |

See footnotes at end of table.

TABLE III. Group A inspection for device type 01 - Continued.

| Symbol | MIL-STD-883 method | Cases J, K,Z,Y,U | Terminal conditions 1/ | | | | | | | | | | | | | | | | | | | | | | | Measured terminal | Test limits | | | | | | Units |
|---|---|---|---|---|---|---|---|---|---|---|---|---|---|---|---|---|---|---|---|---|---|---|---|---|---|---|---|---|---|---|---|---|---|
| | | | 1 | 2 | 3 | 4 | 5 | 6 | 7 | 8 | 9 | 10 | 11 | 12 | 13 | 14 | 15 | 16 | 17 | 18 | 19 | 20 | 21 | 22 | 23 | 24 | | Subgroup 1 $T_A$ = 25°C | | Subgroup 2 $T_A$ = 125°C | | Subgroup 3 $T_A$ = -55°C | | |
| | | Symbol | $CO/_I$ | $CH_7$ | $CH_6$ | $CH_5$ | $CH_4$ | $CH_3$ | $CH_2$ | $CH_1$ | $CH_0$ | A | B | $V_{SS}$ | D | C | INH | $CH_{15}$ | $CH_{14}$ | $CH_{13}$ | $CH_{12}$ | $CH_{11}$ | $CH_{10}$ | $CH_9$ | $CH_8$ | $V_{DD}$ | | Min | Max | Min | Max | Min | Max | |
| | | Test No. | | | | | | | | | | | | | | | | | | | | | | | | | | | | | | | |
| $I_{DOFF}$ | Fig. 9 | 652 | 5.0 V | | | GND | | | | | | GND | GND | GND | GND | GND | 5.0 V | | | | | | | | | 5.0 V | $CH_5$ | | ±100 | | ±100 | | ±100 | nA |
| | | 653 | | | GND | | | | | | | | | | | | | | | | | | | | | | $CH_6$ | | | | | | | |
| | | 654 | | GND | | | | | | | | | | | | | | | | | | | | | GND | | $CH_7$ | | | | | | | |
| | | 655 | | | | | | | | | | | | | | | | | | | | | | GND | | | $CH_8$ | | | | | | | |
| | | 656 | | | | | | | | | | | | | | | | | | | | | GND | | | | $CH_9$ | | | | | | | |
| | | 657 | | | | | | | | | | | | | | | | | | | | GND | | | | | $CH_{10}$ | | | | | | | |
| | | 658 | | | | | | | | | | | | | | | | | | | GND | | | | | | $CH_{11}$ | | | | | | | |
| | | 659 | | | | | | | | | | | | | | | | | | GND | | | | | | | $CH_{12}$ | | | | | | | |
| | | 660 | | | | | | | | | | | | | | | | | GND | | | | | | | | $CH_{13}$ | | | | | | | |
| | | 661 | | | | | | | | | | | | | | | | GND | | | | | | | | | $CH_{14}$ | | | | | | | |
| | | 662 | | | | | | | | | | | | | | | | 5.0 V | 5.0 V | 5.0 V | 5.0 V | 5.0 V | 5.0 V | 5.0 V | 5.0 V | | $CH_{15}$ | | | | | | | |
| | | 663 | GND | 5.0 V | 5.0 V | 5.0 V | 5.0 V | 5.0 V | 5.0 V | 5.0 V | 5.0 V | | | | | | | | | | | | | | | | $CO/_I$ | | | | | | | |
| | | 664 | | | | | | | | 5.0 V | 5.0 V | | | | | | | | | | | | | | | | $CH_0$ | | | | | | | |
| | | 665 | | | | | | | 5.0 V | | | | | | | | | | | | | | | | | | $CH_1$ | | | | | | | |
| | | 666 | | | | | | 5.0 V | | | | | | | | | | | | | | | | | | | $CH_2$ | | | | | | | |
| | | 667 | | | | | 5.0 V | | | | | | | | | | | | | | | | | | | | $CH_3$ | | | | | | | |
| | | 668 | | | | 5.0 V | | | | | | | | | | | | | | | | | | | | | $CH_4$ | | | | | | | |
| | | 669 | | | 5.0 V | | | | | | | | | | | | | | | | | | | | | | $CH_5$ | | | | | | | |
| | | 670 | | 5.0 V | | | | | | | | | | | | | | | | | | | | | 5.0 V | | $CH_6$ | | | | | | | |
| | | 671 | | | | | | | | | | | | | | | | | | | | | | 5.0 V | | | $CH_7$ | | | | | | | |
| | | 672 | | | | | | | | | | | | | | | | | | | | | 5.0 V | | | | $CH_8$ | | | | | | | |
| | | 673 | | | | | | | | | | | | | | | | | | | | 5.0 V | | | | | $CH_9$ | | | | | | | |
| | | 674 | | | | | | | | | | | | | | | | | | | 5.0 V | | | | | | $CH_{10}$ | | | | | | | |
| | | 675 | | | | | | | | | | | | | | | | | | 5.0 V | | | | | | | $CH_{11}$ | | | | | | | |
| | | 676 | | | | | | | | | | | | | | | | | 5.0 V | | | | | | | | $CH_{12}$ | | | | | | | |
| | | 677 | | | | | | | | | | | | | | | | 5.0 V | | | | | | | | | $CH_{13}$ | | | | | | | |
| | | 678 | | | | | | | | | | | | | | | | | | | | | | | | | $CH_{14}$ | | | | | | | |
| | | 679 | | | | | | | | | | | | | | | | | | | | | | | | | $CH_{15}$ | | | | | | | |

See footnotes at end of table.

TABLE III. Group A inspection for device type 01 - Continued.

| Symbol | MIL-STD-883 method | Cases J, K,Z,Y,U | Terminal conditions 1/ | | | | | | | | | | | | | | | | | | | | | | | | Measured terminal | Test limits | | | | | | Units |
|---|---|---|---|---|---|---|---|---|---|---|---|---|---|---|---|---|---|---|---|---|---|---|---|---|---|---|---|---|---|---|---|---|---|---|
| | | | 1 | 2 | 3 | 4 | 5 | 6 | 7 | 8 | 9 | 10 | 11 | 12 | 13 | 14 | 15 | 16 | 17 | 18 | 19 | 20 | 21 | 22 | 23 | 24 | | Subgroup 1 $T_A$ = 25°C | | Subgroup 2 $T_A$ = 125°C | | Subgroup 3 $T_A$ = -55°C | | |
| | | Symbol | $CO/_I$ | $CH_7$ | $CH_6$ | $CH_5$ | $CH_4$ | $CH_3$ | $CH_2$ | $CH_1$ | $CH_0$ | A | B | $V_{SS}$ | D | C | INH | $CH_{15}$ | $CH_{14}$ | $CH_{13}$ | $CH_{12}$ | $CH_{11}$ | $CH_{10}$ | $CH_9$ | $CH_8$ | $V_{DD}$ | | | | | | | | |
| | | Test No. | | | | | | | | | | | | | | | | | | | | | | | | | | Min | Max | Min | Max | Min | Max | |
| $I_{DOFF2}$ | Fig. 9 | 680-713 | Same tests and terminal conditions as for tests 663 through 679, except $V_{DD}$ = 10.0 V and limits are as shown. | | | | | | | | | | | | | | | | | | | | | | | | | | ±200 | | ±200 | | ±200 | nA |
| $I_{DOFF3}$ | Fig. 9 | 714-747 | Same tests and terminal conditions as for tests 663 through 679, except $V_{DD}$ = 15.0 V and limits are as shown. | | | | | | | | | | | | | | | | | | | | | | | | | | ±200 | | ±200 | | ±200 | nA |
| | | | | | | | | | | | | | | | | | | | | | | | | | | | | Subgroup 4 $T_A$ = 25°C | | | | | | |
| | | | | | | | | | | | | | | | | | | | | | | | | | | | | Min | Max | | | | | |
| $C_C$ | 3012 | 748 | | | | | | | | | | 4/ | | GND | | | | | | | | | | | | GND | A | | 7.5 | | | | | pF |
| | | 749 | | | | | | | | | | | 4/ | | | | | | | | | | | | | | B | | | | | | | |
| | | 750 | | | | | | | | | | | | | 4/ | 4/ | | | | | | | | | | | C | | | | | | | |
| | | 751 | | | | | | | | | | | | | | | 4/ | | | | | | | | | | D | | | | | | | |
| | | 752 | | | | | | | | | | | | | | | | | | | | | | | | | INH | | | | | | | |
| $C_{IS}$ | | 753 | | | | | | | | | 4/ | GND | GND | | GND | GND | GND | | | | | | | | | | $CH_0$ | | | | | | | |
| | | 754 | | | | | | | 4/ | | | | | | | | | | | | | | | | | | $CH_1$ | | | | | | | |
| | | 755 | | | | | | 4/ | | | | | | | | | | | | | | | | | | | $CH_2$ | | | | | | | |
| | | 756 | | | | | 4/ | | | | | | | | | | | | | | | | | | | | $CH_3$ | | | | | | | |
| | | 757 | | | | 4/ | | | | | | | | | | | | | | | | | | | | | $CH_4$ | | | | | | | |
| | | 758 | | | 4/ | | | | | | | | | | | | | | | | | | | | | | $CH_5$ | | | | | | | |
| | | 759 | | 4/ | | | | | | | | | | | | | | | | | | | | | | | $CH_6$ | | | | | | | |
| | | 760 | | | | | | | | | | | | | | | | | | | | | | | | | $CH_7$ | | | | | | | |
| | | 761 | | | | | | | | | | | | | | | | | | | | | | | | | $CH_8$ | | | | | | | |
| | | 762 | | | | | | | | | | | | | | | | | | | | | | | 4/ | | $CH_9$ | | | | | | | |
| | | 763 | | | | | | | | | | | | | | | | | | | | | | 4/ | | | $CH_{10}$ | | | | | | | |
| | | 764 | | | | | | | | | | | | | | | | | | | | | 4/ | | | | $CH_{11}$ | | | | | | | |
| | | 765 | | | | | | | | | | | | | | | | | | | | 4/ | | | | | $CH_{12}$ | | | | | | | |
| | | 766 | | | | | | | | | | | | | | | | | | | 4/ | | | | | | $CH_{13}$ | | | | | | | |
| | | 767 | | | | | | | | | | | | | | | | | | 4/ | | | | | | | $CH_{14}$ | | | | | | | |
| | | 768 | | | | | | | | | | | | | | | | | | | | | | | | | $CH_{15}$ | | | | | | | |
| $C_{OS}$ | | 769 | 5/ | | | | | | | | | | | -5.0 V | | | | | | | | | | | | 5.0 V | $CO/_I$ | | 75 | | | | | |

See footnotes at end of table.

TABLE III. Group A inspection for device type 01 - Continued.

| Symbol | MIL-STD-883 method | Cases J, K, Z, Y, U | Terminal conditions 1/ | | | | | | | | | | | | | | | | | | | | | | | Measured terminal | Test limits | | | | | | Units |
|---|---|---|---|---|---|---|---|---|---|---|---|---|---|---|---|---|---|---|---|---|---|---|---|---|---|---|---|---|---|---|---|---|---|
| | | | 1 | 2 | 3 | 4 | 5 | 6 | 7 | 8 | 9 | 10 | 11 | 12 | 13 | 14 | 15 | 16 | 17 | 18 | 19 | 20 | 21 | 22 | 23 | 24 | | Subgroup 4 $T_A$ = 25°C | | | | | |
| | | Symbol | $CO/_I$ | $CH_7$ | $CH_6$ | $CH_5$ | $CH_4$ | $CH_3$ | $CH_2$ | $CH_1$ | $CH_0$ | A | B | $V_{SS}$ | D | C | INH | $CH_{15}$ | $CH_{14}$ | $CH_{13}$ | $CH_{12}$ | $CH_{11}$ | $CH_{10}$ | $CH_9$ | $CH_8$ | $V_{DD}$ | | Min | Max | Min | Max | Min | Max | |
| | | Test No. | | | | | | | | | | | | | | | | | | | | | | | | | | | | | | | |
| $C_{IOS}$ | 3012 | 770 | 6/ | | | | | | | | 6/ | GND | GND | GND | GND | GND | GND | | | | | | | | | GND | $CH_0 \rightarrow CO/_I$ | | 0.4 | | | | | pF |
| | | 771 | | | | | | | | 6/ | | | | | | | | | | | | | | | | | $CH_1 \rightarrow CO/_I$ | | | | | | | |
| | | 772 | | | | | | | 6/ | | | | | | | | | | | | | | | | | | $CH_2 \rightarrow CO/_I$ | | | | | | | |
| | | 773 | | | | | | 6/ | | | | | | | | | | | | | | | | | | | $CH_3 \rightarrow CO/_I$ | | | | | | | |
| | | 774 | | | | | 6/ | | | | | | | | | | | | | | | | | | | | $CH_4 \rightarrow CO/_I$ | | | | | | | |
| | | 775 | | | | 6/ | | | | | | | | | | | | | | | | | | | | | $CH_5 \rightarrow CO/_I$ | | | | | | | |
| | | 776 | | | 6/ | | | | | | | | | | | | | | | | | | | | | | $CH_6 \rightarrow CO/_I$ | | | | | | | |
| | | 777 | | 6/ | | | | | | | | | | | | | | | | | | | | | | | $CH_7 \rightarrow CO/_I$ | | | | | | | |
| | | 778 | | | | | | | | | | | | | | | | | | | | | | | 6/ | | $CH_8 \rightarrow CO/_I$ | | | | | | | |
| | | 779 | | | | | | | | | | | | | | | | | | | | | | 6/ | | | $CH_9 \rightarrow CO/_I$ | | | | | | | |
| | | 780 | | | | | | | | | | | | | | | | | | | | | 6/ | | | | $CH_{10} \rightarrow CO/_I$ | | | | | | | |
| | | 781 | | | | | | | | | | | | | | | | | | | | 6/ | | | | | $CH_{11} \rightarrow CO/_I$ | | | | | | | |
| | | 782 | | | | | | | | | | | | | | | | | | | 6/ | | | | | | $CH_{12} \rightarrow CO/_I$ | | | | | | | |
| | | 783 | | | | | | | | | | | | | | | | | | 6/ | | | | | | | $CH_{13} \rightarrow CO/_I$ | | | | | | | |
| | | 784 | | | | | | | | | | | | | | | | | 6/ | | | | | | | | $CH_{14} \rightarrow CO/_I$ | | | | | | | |
| | | 785 | | | | | | | | | | | | | | | | | | | | | | | | | $CH_{15} \rightarrow CO/_I$ | | | | | | | |
| | | | | | | | | | | | | | | | | | | | | | | | | | | | | Subgroup 9 $T_A$ = 25°C | | Subgroup 10 $T_A$ = 125°C | | Subgroup 11 $T_A$ = -55°C | | |
| | | | | | | | | | | | | | | | | | | | | | | | | | | | | Min | Max | Min | Max | Min | Max | |
| $t_{PLH1}$ and $t_{PHL1}$ | 3003 Fig. 10 | 786 | IN | | | | | | | | OUT | GND | GND | GND | GND | GND | GND | | | | | | | | | 5.0 V | $CO/_I \rightarrow CH_0$ | 3 | 55 | 4 | 77 | 3 | 55 | ns |
| | | 787 | | | | | | | | OUT | | 5.0 V | GND | | | | | | | | | | | | | | $CO/_I \rightarrow CH_1$ | | | | | | | |
| | | 788 | | | | | | | OUT | | | GND | 5.0 V | | | | | | | | | | | | | | $CO/_I \rightarrow CH_2$ | | | | | | | |
| | | 789 | | | | | | OUT | | | | 5.0 V | 5.0 V | | | | | | | | | | | | | | $CO/_I \rightarrow CH_3$ | | | | | | | |
| | | 790 | | | | | OUT | | | | | GND | GND | | | 5.0 V | | | | | | | | | | | $CO/_I \rightarrow CH_4$ | | | | | | | |
| | | 791 | | | | OUT | | | | | | 5.0 V | GND | | | 5.0 V | | | | | | | | | | | $CO/_I \rightarrow CH_5$ | | | | | | | |
| | | 792 | | | OUT | | | | | | | GND | 5.0 V | | | 5.0 V | | | | | | | | | | | $CO/_I \rightarrow CH_6$ | | | | | | | |
| | | 793 | | OUT | | | | | | | | 5.0 V | 5.0 V | | | 5.0 V | | | | | | | | | | | $CO/_I \rightarrow CH_7$ | | | | | | | |

See footnotes at end of table.

TABLE III. Group A inspection for device type 01 - Continued.

| Symbol | MIL-STD-883 method | Cases J, K,Z,Y,U | Terminal conditions 1/ | | | | | | | | | | | | | | | | | | | | | | | Measured terminal | Test limits | | | | | | Units |
|---|---|---|---|---|---|---|---|---|---|---|---|---|---|---|---|---|---|---|---|---|---|---|---|---|---|---|---|---|---|---|---|---|---|
| | | | 1 | 2 | 3 | 4 | 5 | 6 | 7 | 8 | 9 | 10 | 11 | 12 | 13 | 14 | 15 | 16 | 17 | 18 | 19 | 20 | 21 | 22 | 23 | 24 | | Subgroup 9 $T_A$ = 25°C | | Subgroup 10 $T_A$ = 125°C | | Subgroup 11 $T_A$ = -55°C | | |
| | | Symbol | $CO/_I$ | $CH_7$ | $CH_6$ | $CH_5$ | $CH_4$ | $CH_3$ | $CH_2$ | $CH_1$ | $CH_0$ | A | B | $V_{SS}$ | D | C | INH | $CH_{15}$ | $CH_{14}$ | $CH_{13}$ | $CH_{12}$ | $CH_{11}$ | $CH_{10}$ | $CH_9$ | $CH_8$ | $V_{DD}$ | | Min | Max | Min | Max | Min | Max | |
| | | Test No. | | | | | | | | | | | | | | | | | | | | | | | | | | | | | | | |
| $t_{PLH1}$ and $t_{PHL1}$ | 3003 Fig. 10 | 794 | IN | | | | | | | | | GND | GND | GND | 5.0 V | GND | GND | | | | | | | | OUT | 5.0 V | $CO/_I \rightarrow CH_8$ | 3 | 55 | 4 | 77 | 3 | 55 | ns |
| | | 795 | | | | | | | | | | 5.0 V | GND | | | | | | | | | | | OUT | | | $CO/_I \rightarrow CH_9$ | | | | | | | |
| | | 796 | | | | | | | | | | GND | 5.0 V | | | | | | | | | OUT | | | | | $CO/_I \rightarrow CH_{10}$ | | | | | | | |
| | | 797 | | | | | | | | | | 5.0 V | 5.0 V | | | | | | | | OUT | | | | | | $CO/_I \rightarrow CH_{11}$ | | | | | | | |
| | | 798 | | | | | | | | | | GND | GND | | | 5.0 V | | | | OUT | | | | | | | $CO/_I \rightarrow CH_{12}$ | | | | | | | |
| | | 799 | | | | | | | | | | 5.0 V | GND | | | | | | | | | | | | | | $CO/_I \rightarrow CH_{13}$ | | | | | | | |
| | | 800 | | | | | | | | | | GND | 5.0 V | | | | | | OUT | | | | | | | | $CO/_I \rightarrow CH_{14}$ | | | | | | | |
| | | 801 | | | | | | | | | | 5.0 V | 5.0 V | | | | | OUT | | | | | | | | | $CO/_I \rightarrow CH_{15}$ | | | | | | | |
| $t_{PLH2}$ | 3003 Fig. 12 | 802 | 5.0 V | | | | | | | | OUT | IN | GND | | GND | GND | | | | | | | | | | | A → $CH_0$ | 30 | 600 | 41 | 830 | 30 | 600 | |
| | | 803 | | | | | | | | OUT | | IN | GND | | | | | | | | | | | | | | A → $CH_1$ | | | | | | | |
| | | 804 | | | | | | | OUT | | | GND | IN | | | | | | | | | | | | | | B → $CH_2$ | | | | | | | |
| | | 805 | | | | | | OUT | | | | IN | IN | | | | | | | | | | | | | | B → $CH_3$ | | | | | | | |
| | | 806 | | | | | OUT | | | | | GND | GND | | | IN | | | | | | | | | | | C → $CH_4$ | | | | | | | |
| | | 807 | | | | OUT | | | | | | IN | GND | | | | | | | | | | | | | | A → $CH_5$ | | | | | | | |
| | | 808 | | | OUT | | | | | | | GND | IN | | | | | | | | | | | | | | B → $CH_6$ | | | | | | | |
| | | 809 | | OUT | | | | | | | | IN | IN | | | | | | | | | | | | | | C → $CH_7$ | | | | | | | |
| | | 810 | | | | | | | | | | GND | GND | | IN | GND | | | | | | | | | OUT | | D → $CH_8$ | | | | | | | |
| | | 811 | | | | | | | | | | IN | GND | | | | | | | | | | | OUT | | | A → $CH_9$ | | | | | | | |
| | | 812 | | | | | | | | | | GND | IN | | | | | | | | | | OUT | | | | B → $CH_{10}$ | | | | | | | |
| | | 813 | | | | | | | | | | IN | IN | | | | | | | | | OUT | | | | | D → $CH_{11}$ | | | | | | | |
| | | 814 | | | | | | | | | | GND | GND | | | IN | | | | | OUT | | | | | | C → $CH_{12}$ | | | | | | | |
| | | 815 | | | | | | | | | | IN | GND | | | | | | | OUT | | | | | | | A → $CH_{13}$ | | | | | | | |
| | | 816 | | | | | | | | | | GND | IN | | | | | | OUT | | | | | | | | B → $CH_{14}$ | | | | | | | |
| | | 817 | | | | | | | | | | IN | IN | | | | | OUT | | | | | | | | | D → $CH_{15}$ | | | | | | | |
| $t_{PHL2}$ | | 818-833 | Same tests and terminal conditions as for tests 802-817, except limits are as shown. | | | | | | | | | | | | | | | | | | | | | | | | | 20 | 400 | 28 | 560 | 20 | 400 | |

See footnotes at end of table.

TABLE III. Group A inspection for device type 01 - Continued.

| Symbol | MIL-STD-883 method | Cases J, K,Z,Y,U | Terminal conditions 1/ | | | | | | | | | | | | | | | | | | | | | | | | Measured terminal | Test limits | | | | | | Units |
|---|---|---|---|---|---|---|---|---|---|---|---|---|---|---|---|---|---|---|---|---|---|---|---|---|---|---|---|---|---|---|---|---|---|---|
| | | | 1 | 2 | 3 | 4 | 5 | 6 | 7 | 8 | 9 | 10 | 11 | 12 | 13 | 14 | 15 | 16 | 17 | 18 | 19 | 20 | 21 | 22 | 23 | 24 | | Subgroup 9 $T_A$ = 25°C | | Subgroup 10 $T_A$ = 125°C | | Subgroup 11 $T_A$ = -55°C | | |
| | | Symbol | $CO/_I$ | $CH_7$ | $CH_6$ | $CH_5$ | $CH_4$ | $CH_3$ | $CH_2$ | $CH_1$ | $CH_0$ | A | B | $V_{SS}$ | D | C | INH | $CH_{15}$ | $CH_{14}$ | $CH_{13}$ | $CH_{12}$ | $CH_{11}$ | $CH_{10}$ | $CH_9$ | $CH_8$ | $V_{DD}$ | | Min | Max | Min | Max | Min | Max | |
| | | Test No. | | | | | | | | | | | | | | | | | | | | | | | | | | | | | | | | |
| $t_{PLH3}$ | 3003 Fig. 14 | 834 | 5.0 V | | | | | | | | OUT | GND | GND | GND | GND | GND | IN | | | | | | | | | 5.0 V | INH → $CH_0$ | 30 | 600 | 41 | 830 | 30 | 600 | ns |
| | | 835 | | | | | | | | OUT | | 5.0 V | GND | | | | | | | | | | | | | | INH → $CH_1$ | | | | | | | |
| | | 836 | | | | | | | OUT | | | GND | 5.0 V | | | | | | | | | | | | | | INH → $CH_2$ | | | | | | | |
| | | 837 | | | | | | OUT | | | | 5.0 V | 5.0 V | | | 5.0 V | | | | | | | | | | | INH → $CH_3$ | | | | | | | |
| | | 838 | | | | | OUT | | | | | GND | GND | | | | | | | | | | | | | | INH → $CH_4$ | | | | | | | |
| | | 839 | | | | OUT | | | | | | 5.0 V | GND | | | | | | | | | | | | | | INH → $CH_5$ | | | | | | | |
| | | 840 | | | OUT | | | | | | | GND | 5.0 V | | | | | | | | | | | | | | INH → $CH_6$ | | | | | | | |
| | | 841 | | OUT | | | | | | | | 5.0 V | 5.0 V | | 5.0 V | GND | | | | | | | | | OUT | | INH → $CH_7$ | | | | | | | |
| | | 842 | | | | | | | | | | GND | GND | | | | | | | | | | | OUT | | | INH → $CH_8$ | | | | | | | |
| | | 843 | | | | | | | | | | 5.0 V | GND | | | | | | | | | | OUT | | | | INH → $CH_9$ | | | | | | | |
| | | 844 | | | | | | | | | | GND | 5.0 V | | | | | | | | | OUT | | | | | INH → $CH_{10}$ | | | | | | | |
| | | 845 | | | | | | | | | | 5.0 V | 5.0 V | | | 5.0 V | | | | | OUT | | | | | | INH → $CH_{11}$ | | | | | | | |
| | | 846 | | | | | | | | | | GND | GND | | | | | | | OUT | | | | | | | INH → $CH_{12}$ | | | | | | | |
| | | 847 | | | | | | | | | | 5.0 V | GND | | | | | | OUT | | | | | | | | INH → $CH_{13}$ | | | | | | | |
| | | 848 | | | | | | | | | | GND | 5.0 V | | | | | OUT | | | | | | | | | INH → $CH_{14}$ | | | | | | | |
| | | 849 | | | | | | | | | | 5.0 V | 5.0 V | | | | | | | | | | | | | | INH → $CH_{15}$ | 20 | 400 | 28 | 560 | 20 | 400 | |
| $t_{PHL3}$ | 3003 Fig. 14 | 850-865 | Same tests and terminal conditions as for tests 834-849, except limits are as shown. | | | | | | | | | | | | | | | | | | | | | | | | | Subgroup 12 $T_A$ = 25°C | | | | | | |
| | | | | | | | | | | | | | | | | | | | | | | | | | | | | Min | Max | | | | | |
| $t_{PLH1}$ $t_{PHL1}$ | 3003 Fig. 10 | 866-881 | Same tests and terminal conditions as for tests 786-801, except $V_{DD}$ = 10.0 V and limits are as shown. | | | | | | | | | | | | | | | | | | | | | | | | | 1 1 | 25 25 | | | | | ns |
| $t_{PLH2}$ $t_{PHL2}$ | 3003 Fig. 12 | 882-913 | Same tests and terminal conditions as for tests 802-833, except $CO/_I$=$V_{DD}$=10.0 V and limits are as shown. | | | | | | | | | | | | | | | | | | | | | | | | | 13 8 | 250 150 | | | | | |
| $t_{PLH3}$ $t_{PHL3}$ | 3003 Fig. 14 | 914-945 | Same tests and terminal conditions as for tests 834-865, except $CO/_I$=$V_{DD}$=10.0 V and limits are as shown. | | | | | | | | | | | | | | | | | | | | | | | | | 13 8 | 250 150 | | | | | |

See footnotes at end of table.

TABLE III. Group A inspection for device type 02.

| Symbol | MIL-STD-883 method | Cases J, K,Z,Y,U | Terminal conditions 1/ | | | | | | | | | | | | | | | | | | | | | | | | | Measured terminal | Test limits | | | | | | Units |
|---|---|---|---|---|---|---|---|---|---|---|---|---|---|---|---|---|---|---|---|---|---|---|---|---|---|---|---|---|---|---|---|---|---|---|---|
| | | | 1 | 2 | 3 | 4 | 5 | 6 | 7 | 8 | 9 | 10 | 11 | 12 | 13 | 14 | 15 | 16 | 17 | 18 | 19 | 20 | 21 | 22 | 23 | 24 | | Subgroup 1 $T_A$ = 25°C | | Subgroup 2 $T_A$ = 125°C | | Subgroup 3 $T_A$ = -55°C | | |
| | | Symbol | COX | $CHX_7$ | $CHX_6$ | $CHX_5$ | $CHX_4$ | $CHX_3$ | $CHX_2$ | $CHX_1$ | $CHX_0$ | A | B | $V_{SS}$ | INH | C | $CHY_7$ | $CHY_6$ | COY | $CHY_5$ | $CHY_4$ | $CHY_3$ | $CHY_2$ | $CHY_1$ | $CHY_0$ | $V_{DD}$ | | Min | Max | Min | Max | Min | Max | |
| | | Test No. | | | | | | | | | | | | | | | | | | | | | | | | | | | | | | | | | |
| $V_{IC(pos)}$ | | 1 | | 1 mA | | | | | | | | | | | | | | | | | | | | | | | | | | | | | | | |
| | | 2 | | | 1 mA | | | | | | | | | | | | | | | | | | | | | | | | | | | | | | |
| | | 3 | | | | 1 mA | | | | | | | | | | | | | | | | | | | | | | | | | | | | | |
| | | 4 | | | | | 1 mA | | | | | | | | | | | | | | | | | | | | | | | | | | | | |
| | | 5 | | | | | | 1 mA | | | | | | | | | | | | | | | | | | | | | | | | | | | |
| | | 6 | | | | | | | 1 mA | | | | | | | | | | | | | | | | | | | | | | | | | | |
| | | 7 | | | | | | | | 1 mA | | | | | | | | | | | | | | | | | | | | | | | | | |
| | | 8 | | | | | | | | | 1 mA | | | | | | | | | | | | | | | | | | | | | | | | |
| | | 9 | | | | | | | | | | 1 mA | | | | | | | | | | | | | | | | | | | | | | | |
| | | 10 | | | | | | | | | | | 1 mA | | | | | | | | | | | | | | | | | | | | | | |
| | | 11 | | | | | | | | | | | | | 1 mA | | | | | | | | | | | | | | | | | | | | |
| | | 12 | | | | | | | | | | | | | | 1 mA | | | | | | | | | | | | | | | | | | | |
| | | 13 | | | | | | | | | | | | | | | 1 mA | | | | | | | | | | | | | | | | | | |
| | | 14 | | | | | | | | | | | | | | | | 1 mA | | | | | | | | | | | | | | | | | |
| | | 15 | | | | | | | | | | | | | | | | | 1 mA | | | | | | | | | | | | | | | | |
| | | 16 | | | | | | | | | | | | | | | | | | 1 mA | | | | | | | | | | | | | | | |
| | | 17 | | | | | | | | | | | | | | | | | | | 1 mA | | | | | | | | | | | | | | |
| | | 18 | | | | | | | | | | | | | | | | | | | | 1 mA | | | | | | | | | | | | | |
| | | 19 | | | | | | | | | | | | | | | | | | | | | 1 mA | | | | | | | | | | | | |
| | | 20 | | | | | | | | | | | | | | | | | | | | | | 1 mA | | | | | | | | | | | |
| | | 21 | | | | | | | | | | | | | | | | | | | | | | | 1 mA | | | | | | | | | | |
| | | 22 | 1 mA | | | | | | | | | | | | | | | | 1 mA | | | | | | | | | | | | | | | | |
| $V_{IC(neg)}$ | | 23 | | -1 mA | | | | | | | | | GND | | | | | | | | | | | | | | | | | | | | | | |
| | | 24 | | | -1 mA | | | | | | | | | | | | | | | | | | | | | | | | | | | | | | |
| | | 25 | | | | -1 mA | | | | | | | | | | | | | | | | | | | | | | | | | | | | | |
| | | 26 | | | | | -1 mA | | | | | | | | | | | | | | | | | | | | | | | | | | | | |
| | | 27 | | | | | | -1 mA | | | | | | | | | | | | | | | | | | | | | | | | | | | |
| | | | | | | | | | | | | | | | | | | | | | | | | | | GND | $CHX_7$ | | 1.5 | | | | | | Vdc |
| | | | | | | | | | | | | | | | | | | | | | | | | | | | $CHX_6$ | | | | | | | | |
| | | | | | | | | | | | | | | | | | | | | | | | | | | | $CHX_5$ | | | | | | | | |
| | | | | | | | | | | | | | | | | | | | | | | | | | | | $CHX_4$ | | | | | | | | |
| | | | | | | | | | | | | | | | | | | | | | | | | | | | $CHX_3$ | | | | | | | | |
| | | | | | | | | | | | | | | | | | | | | | | | | | | | $CHX_2$ | | | | | | | | |
| | | | | | | | | | | | | | | | | | | | | | | | | | | | $CHX_1$ | | | | | | | | |
| | | | | | | | | | | | | | | | | | | | | | | | | | | | $CHX_0$ | | | | | | | | |
| | | | | | | | | | | | | | | | | | | | | | | | | | | | A | | | | | | | | |
| | | | | | | | | | | | | | | | | | | | | | | | | | | | B | | | | | | | | |
| | | | | | | | | | | | | | | | | | | | | | | | | | | | INH | | | | | | | | |
| | | | | | | | | | | | | | | | | | | | | | | | | | | | C | | | | | | | | |
| | | | | | | | | | | | | | | | | | | | | | | | | | | | $CHY_7$ | | | | | | | | |
| | | | | | | | | | | | | | | | | | | | | | | | | | | | $CHY_6$ | | | | | | | | |
| | | | | | | | | | | | | | | | | | | | | | | | | | | | $CHY_5$ | | | | | | | | |
| | | | | | | | | | | | | | | | | | | | | | | | | | | | $CHY_4$ | | | | | | | | |
| | | | | | | | | | | | | | | | | | | | | | | | | | | | $CHY_3$ | | | | | | | | |
| | | | | | | | | | | | | | | | | | | | | | | | | | | | $CHY_2$ | | | | | | | | |
| | | | | | | | | | | | | | | | | | | | | | | | | | | | $CHY_1$ | | | | | | | | |
| | | | | | | | | | | | | | | | | | | | | | | | | | | | $CHY_0$ | | | | | | | | |
| | | | | | | | | | | | | | | | | | | | | | | | | | | | COY | | | | | | | | |
| | | | | | | | | | | | | | | | | | | | | | | | | | | | COX | | | | | | | | |
| | | | | | | | | | | | | | | | | | | | | | | | | | | | $CHX_7$ | | -6.0 | | | | | | |
| | | | | | | | | | | | | | | | | | | | | | | | | | | | $CHX_6$ | | | | | | | | |
| | | | | | | | | | | | | | | | | | | | | | | | | | | | $CHX_5$ | | | | | | | | |
| | | | | | | | | | | | | | | | | | | | | | | | | | | | $CHX_4$ | | | | | | | | |
| | | | | | | | | | | | | | | | | | | | | | | | | | | | $CHX_3$ | | | | | | | | |

See footnotes at end of table.

TABLE III. Group A inspection for device type 02 - Continued.

| Symbol | MIL-STD-883 method | Cases J, K, Z, Y, U | Terminal conditions 1/ | | | | | | | | | | | | | | | | | | | | | | | Measured terminal | Test limits | | | | | | Units |
|---|---|---|---|---|---|---|---|---|---|---|---|---|---|---|---|---|---|---|---|---|---|---|---|---|---|---|---|---|---|---|---|---|---|
| | | | 1 | 2 | 3 | 4 | 5 | 6 | 7 | 8 | 9 | 10 | 11 | 12 | 13 | 14 | 15 | 16 | 17 | 18 | 19 | 20 | 21 | 22 | 23 | 24 | | Subgroup 1 $T_A$ = 25°C | | Subgroup 2 $T_A$ = 125°C | | Subgroup 3 $T_A$ = -55°C | | |
| | | Symbol | COX | $CHX_7$ | $CHX_6$ | $CHX_5$ | $CHX_4$ | $CHX_3$ | $CHX_2$ | $CHX_1$ | $CHX_0$ | A | B | $V_{SS}$ | INH | C | $CHY_7$ | $CHY_6$ | COY | $CHY_5$ | $CHY_4$ | $CHY_3$ | $CHY_2$ | $CHY_1$ | $CHY_0$ | $V_{DD}$ | | Min | Max | Min | Max | Min | Max | |
| | | Test No. | | | | | | | | | | | | | | | | | | | | | | | | | | | | | | | |
| $V_{IC(neg)}$ | | 28 | | | | | | | -1 mA | | | | | GND | | | | | | | | | | | | | $CHX_2$ | | -6.0 | | | | | Vdc |
| | | 29 | | | | | | | | -1 mA | | | | | | | | | | | | | | | | | $CHX_1$ | | | | | | | |
| | | 30 | | | | | | | | | -1 mA | | | | | | | | | | | | | | | | $CHX_0$ | | | | | | | |
| | | 31 | | | | | | | | | | -1 mA | | | | | | | | | | | | | | | A | | | | | | | |
| | | 32 | | | | | | | | | | | -1 mA | | | | | | | | | | | | | | B | | | | | | | |
| | | 33 | | | | | | | | | | | | | -1 mA | | | | | | | | | | | | INH | | | | | | | |
| | | 34 | | | | | | | | | | | | | | -1 mA | | | | | | | | | | | C | | | | | | | |
| | | 35 | | | | | | | | | | | | | | | -1 mA | | | | | | | | | | $CHY_7$ | | | | | | | |
| | | 36 | | | | | | | | | | | | | | | | -1 mA | | | | | | | | | $CHY_6$ | | | | | | | |
| | | 37 | | | | | | | | | | | | | | | | | | -1 mA | | | | | | | $CHY_5$ | | | | | | | |
| | | 38 | | | | | | | | | | | | | | | | | | | -1 mA | | | | | | $CHY_4$ | | | | | | | |
| | | 39 | | | | | | | | | | | | | | | | | | | | -1 mA | | | | | $CHY_3$ | | | | | | | |
| | | 40 | | | | | | | | | | | | | | | | | | | | | -1 mA | | | | $CHY_2$ | | | | | | | |
| | | 41 | | | | | | | | | | | | | | | | | | | | | | -1 mA | | | $CHY_1$ | | | | | | | |
| | | 42 | | | | | | | | | | | | | | | | | | | | | | | -1 mA | | $CHY_0$ | | | | | | | |
| | | 43 | | | | | | | | | | | | | | | | | -1 mA | | | | | | | | COY | | | | | | | |
| | | 44 | -1 mA | | | | | | | | | | | | | | | | | | | | | | | | COX | | | | | | | |
| $I_{SS}$ 2/ | 3005 | 45 | GND | GND | GND | GND | GND | GND | GND | GND | GND | GND | GND | | GND | GND | GND | GND | GND | GND | GND | GND | GND | GND | GND | 18.0 V | $V_{SS}$ | | -0.25 | | -2.5 | | | μA |
| | | 46 | | GND | GND | GND | GND | GND | GND | GND | GND | 18.0 V | 18.0 V | | | 18.0 V | GND | GND | | GND | GND | GND | GND | GND | GND | | | | | | | | | |
| | | 47 | | 18.0 V | 18.0 V | 18.0 V | 18.0 V | GND | 18.0 V | 18.0 V | 18.0 V | 18.0 V | | | | GND | 18.0 V | 18.0 V | | 18.0 V | 18.0 V | GND | 18.0 V | 18.0 V | 18.0 V | | | | | | | | | |
| | | 48 | | GND | 18.0 V | 18.0 V | 18.0 V | 18.0 V | 18.0 V | 18.0 V | 18.0 V | 18.0 V | | | | 18.0 V | GND | 18.0 V | | 18.0 V | 18.0 V | 18.0 V | 18.0 V | 18.0 V | 18.0 V | | | | | | | | | |
| | | 49 | | 18.0 V | 18.0 V | 18.0 V | 18.0 V | 18.0 V | GND | 18.0 V | 18.0 V | GND | | | | GND | 18.0 V | 18.0 V | | 18.0 V | 18.0 V | 18.0 V | GND | 18.0 V | 18.0 V | | | | | | | | | |
| | | 50 | 18.0 V | 18.0 V | GND | GND | GND | GND | | GND | GND | 18.0 V | | | | 18.0 V | 18.0 V | GND | 18.0 V | GND | GND | GND | | GND | GND | | | | | | | | | |
| | | 51 | | GND | GND | GND | GND | 18.0 V | | GND | GND | 18.0 V | | | | GND | GND | GND | | GND | GND | 18.0 V | | GND | GND | | | | | | | | | |
| | | 52 | | GND | GND | GND | 18.0 V | GND | | GND | GND | GND | GND | | | 18.0 V | GND | GND | | GND | 18.0 V | GND | | GND | GND | | | | | | | | | |
| | | 53 | | 18.0 V | 18.0 V | 18.0 V | 18.0 V | 18.0 V | 18.0 V | 18.0 V | 18.0 V | 18.0 V | GND | | | 18.0 V | 18.0 V | 18.0 V | | 18.0 V | 18.0 V | 18.0 V | 18.0 V | 18.0 V | 18.0 V | | | | | | | | | |
| | | 54 | | 18.0 V | 18.0 V | 18.0 V | 18.0 V | 18.0 V | 18.0 V | 18.0 V | 18.0 V | 18.0 V | GND | | | GND | 18.0 V | 18.0 V | | 18.0 V | 18.0 V | 18.0 V | 18.0 V | 18.0 V | 18.0 V | | | | | | | | | |

See footnotes at end of table.

TABLE III. Group A inspection for device type 02 - Continued.

| Symbol | MIL-STD-883 method | Cases J, K, Z, Y, U | Terminal conditions 1/ | | | | | | | | | | | | | | | | | | | | | | | | Measured terminal | Test limits | | | | | | Units |
|---|---|---|---|---|---|---|---|---|---|---|---|---|---|---|---|---|---|---|---|---|---|---|---|---|---|---|---|---|---|---|---|---|---|---|
| | | | 1 | 2 | 3 | 4 | 5 | 6 | 7 | 8 | 9 | 10 | 11 | 12 | 13 | 14 | 15 | 16 | 17 | 18 | 19 | 20 | 21 | 22 | 23 | 24 | | Subgroup 1 $T_A$ = 25°C | | Subgroup 2 $T_A$ = 125°C | | Subgroup 3 $T_A$ = -55°C | | |
| | | Symbol | COX | $CHX_7$ | $CHX_6$ | $CHX_5$ | $CHX_4$ | $CHX_3$ | $CHX_2$ | $CHX_1$ | $CHX_0$ | A | B | $V_{SS}$ | INH | C | $CHY_7$ | $CHY_6$ | COY | $CHY_5$ | $CHY_4$ | $CHY_3$ | $CHY_2$ | $CHY_1$ | $CHY_0$ | $V_{DD}$ | | Min | Max | Min | Max | Min | Max | |
| | | Test No. | | | | | | | | | | | | | | | | | | | | | | | | | | | | | | | | |
| $V_{OH1}$ | 3006 | 55 | | 15.0 V | | | | | | | | 15.0 V | 15.0 V | GND | GND | 15.0 V | | | | | | | | | | 15.0 V | COX | 14.95 | | 14.95 | | 14.95 | | Vdc |
| | | 56 | | | | | | | | | | 15.0 V | 15.0 V | | | 15.0 V | 15.0 V | | | | | | | | | | COY | | | | | | | |
| | | 57 | 15.0 V | | | | | | | | | GND | GND | | | GND | | | GND | | | | | | | | $CHX_0$ | | | | | | | |
| | | 58 | | | | | | | | | | 15.0 V | GND | | | | | | | | | | | | | | $CHX_1$ | | | | | | | |
| | | 59 | | | | | | | | | | GND | 15.0 V | | | | | | | | | | | | | | $CHX_2$ | | | | | | | |
| | | 60 | | | | | | | | | | 15.0 V | 15.0 V | | | | | | | | | | | | | | $CHX_3$ | | | | | | | |
| | | 61 | | | | | | | | | | GND | GND | | | 15.0 V | | | | | | | | | | | $CHX_4$ | | | | | | | |
| | | 62 | | | | | | | | | | 15.0 V | GND | | | | | | | | | | | | | | $CHX_5$ | | | | | | | |
| | | 63 | | | | | | | | | | GND | 15.0 V | | | | | | | | | | | | | | $CHX_6$ | | | | | | | |
| | | 64 | | | | | | | | | | 15.0 V | 15.0 V | | | | | | | | | | | | | | $CHX_7$ | | | | | | | |
| | | 65 | GND | | | | | | | | | GND | GND | | | GND | | | 15.0 V | | | | | | | | $CHY_0$ | | | | | | | |
| | | 66 | | | | | | | | | | 15.0 V | GND | | | | | | | | | | | | | | $CHY_1$ | | | | | | | |
| | | 67 | | | | | | | | | | GND | 15.0 V | | | | | | | | | | | | | | $CHY_2$ | | | | | | | |
| | | 68 | | | | | | | | | | 15.0 V | 15.0 V | | | | | | | | | | | | | | $CHY_3$ | | | | | | | |
| | | 69 | | | | | | | | | | GND | GND | | | 15.0 V | | | | | | | | | | | $CHY_4$ | | | | | | | |
| | | 70 | | | | | | | | | | 15.0 V | GND | | | | | | | | | | | | | | $CHY_5$ | | | | | | | |
| | | 71 | | | | | | | | | | GND | 15.0 V | | | | | | | | | | | | | | $CHY_6$ | | | | | | | |
| | | 72 | | | | | | | | | | 15.0 V | 15.0 V | | | | | | | | | | | | | | $CHY_7$ | | | | | | | |
| $V_{OL1}$ | 3007 | 73 | | | | | | | | | GND | GND | GND | | 15.0 V | GND | | | | | | | | | | | COX | | 0.05 | | 0.05 | | 0.05 | |
| | | 74 | | | | | | | | | | GND | | | | | | | | | | | | | GND | | COY | | | | | | | |
| | | 75 | GND | | | | | | | | | GND | | | | | | | GND | | | | | | | | $CHX_0$ | | | | | | | |
| | | 76 | | | | | | | | | | 15.0 V | | | | | | | | | | | | | | | $CHX_1$ | | | | | | | |
| | | 77 | | | | | | | | | | GND | 15.0 V | | | | | | | | | | | | | | $CHX_2$ | | | | | | | |
| | | 78 | | | | | | | | | | 15.0 V | 15.0 V | | | | | | | | | | | | | | $CHX_3$ | | | | | | | |
| | | 79 | | | | | | | | | | GND | GND | | | 15.0 V | | | | | | | | | | | $CHX_4$ | | | | | | | |
| | | 80 | | | | | | | | | | 15.0 V | GND | | | 15.0 V | | | | | | | | | | | $CHX_5$ | | | | | | | |
| | | 81 | | | | | | | | | | GND | 15.0 V | | | 15.0 V | | | | | | | | | | | $CHX_6$ | | | | | | | |

See footnotes at end of table.

TABLE III. Group A inspection for device type 02 - Continued.

| Symbol | MIL-STD-883 method | Cases J, K,Z,Y,U | Terminal conditions 1/ | | | | | | | | | | | | | | | | | | | | | | | | Measured terminal | Test limits | | | | | | Units |
|---|---|---|---|---|---|---|---|---|---|---|---|---|---|---|---|---|---|---|---|---|---|---|---|---|---|---|---|---|---|---|---|---|---|---|
| | | | 1 | 2 | 3 | 4 | 5 | 6 | 7 | 8 | 9 | 10 | 11 | 12 | 13 | 14 | 15 | 16 | 17 | 18 | 19 | 20 | 21 | 22 | 23 | 24 | | Subgroup 1 $T_A$ = 25°C | | Subgroup 2 $T_A$ = 125°C | | Subgroup 3 $T_A$ = -55°C | | |
| | | Symbol | COX | $CHX_7$ | $CHX_6$ | $CHX_5$ | $CHX_4$ | $CHX_3$ | $CHX_2$ | $CHX_1$ | $CHX_0$ | A | B | $V_{SS}$ | INH | C | $CHY_7$ | $CHY_6$ | COY | $CHY_5$ | $CHY_4$ | $CHY_3$ | $CHY_2$ | $CHY_1$ | $CHY_0$ | $V_{DD}$ | | Min | Max | Min | Max | Min | Max | |
| | | Test No. | | | | | | | | | | | | | | | | | | | | | | | | | | | | | | | | |
| $V_{OL1}$ | 3007 | 82 | GND | | | | | | | | | 15.0 V | 15.0 V | GND | 15.0 V | 15.0 V | | | GND | | | | | | | 15.0 V | $CHX_7$ | | 0.05 | | 0.05 | | 0.05 | Vdc |
| | | 83 | | | | | | | | | | GND | GND | | | GND | | | | | | | | | | | $CHY_0$ | | | | | | | |
| | | 84 | | | | | | | | | | 15.0 V | GND | | | | | | | | | | | | | | $CHY_1$ | | | | | | | |
| | | 85 | | | | | | | | | | GND | 15.0 V | | | | | | | | | | | | | | $CHY_2$ | | | | | | | |
| | | 86 | | | | | | | | | | 15.0 V | 15.0 V | | | | | | | | | | | | | | $CHY_3$ | | | | | | | |
| | | 87 | | | | | | | | | | GND | GND | | | 15.0 V | | | | | | | | | | | $CHY_4$ | | | | | | | |
| | | 88 | | | | | | | | | | 15.0 V | GND | | | | | | | | | | | | | | $CHY_5$ | | | | | | | |
| | | 89 | | | | | | | | | | GND | 15.0 V | | | | | | | | | | | | | | $CHY_6$ | | | | | | | |
| | | 90 | | | | | | | | | | 15.0 V | 15.0 V | | | | | | | | | | | | | | $CHY_7$ | | | | | | | |
| $I_{IH1}$ 3/ | 3010 | 91 | | 18.0 V | 18.0 V | 18.0 V | 18.0 V | 18.0 V | 18.0 V | 18.0 V | 18.0 V | 18.0 V | 18.0 V | | 18.0 V | 18.0 V | 18.0 V | 18.0 V | | 18.0 V | 18.0 V | 18.0 V | 18.0 V | 18.0 V | 18.0 V | 18.0 V | All inputs | | 20 | | | | | nA |
| $I_{IH2}$ 3/ | | 92 | 18.0 V | | | | | | | | | GND | GND | | GND | GND | | | | | | | | | | | COX | | 1.0 | | 45 | | | |
| | | 93 | | | | | | | | | | GND | GND | | | | | | 18.0 V | | | | | | | | COY | | | | | | | |
| | | 94 | | GND | GND | GND | GND | GND | GND | GND | GND | 18.0 V | GND | | | | GND | GND | | GND | GND | GND | GND | GND | GND | | A | | | | | | | |
| | | 95 | | | | | | | | | | GND | 18.0 V | | | | | | | | | | | | | | B | | | | | | | |
| | | 96 | | | | | | | | | | | GND | | | 18.0 V | | | | | | | | | | | C | | | | | | | |
| | | 97 | | | | | | | | | | | | | 18.0 V | GND | | | | | | | | | | | INH | | | | | | | |
| | | 98 | | | | | | | | | 18.0 V | | | | GND | GND | | | | | | | | | | | $CHX_0$ | | | | | | | |
| | | 99 | | | | | | | | 18.0 V | GND | 18.0 V | | | | | | | | | | | | | | | $CHX_1$ | | | | | | | |
| | | 100 | | | | | | | 18.0 V | GND | | GND | 18.0 V | | | | | | | | | | | | | | $CHX_2$ | | | | | | | |
| | | 101 | | | | | | 18.0 V | GND | | | 18.0 V | 18.0 V | | | | | | | | | | | | | | $CHX_3$ | | | | | | | |
| | | 102 | | | | | 18.0 V | GND | | | | GND | GND | | | 18.0 V | | | | | | | | | | | $CHX_4$ | | | | | | | |
| | | 103 | | | | 18.0 V | GND | | | | | 18.0 V | GND | | | | | | | | | | | | | | $CHX_5$ | | | | | | | |
| | | 104 | | | 18.0 V | GND | GND | | | | | GND | 18.0 V | | | | | | | | | | | | | | $CHX_6$ | | | | | | | |
| | | 105 | | 18.0 V | GND | GND | GND | | | | | 18.0 V | 18.0 V | | | | | | | | | | | | | | $CHX_7$ | | | | | | | |
| | | 106 | | | | | | | | | | GND | GND | | | GND | GND | GND | | GND | GND | GND | GND | GND | 18.0 V | | $CHY_0$ | | | | | | | |
| | | 107 | | | | | | | | | | 18.0 V | GND | | | GND | GND | GND | | GND | GND | GND | GND | 18.0 V | GND | | $CHY_1$ | | | | | | | |
| | | 108 | | | | | | | | | | GND | 18.0 V | | | GND | GND | GND | | GND | GND | GND | 18.0 V | GND | GND | | $CHY_2$ | | | | | | | |

See footnotes at end of table.

TABLE III. Group A inspection for device type 02 - Continued.

| Symbol | MIL-STD-883 method | Cases J, K,Z,Y,U | Terminal conditions 1/ | | | | | | | | | | | | | | | | | | | | | | | | Measured terminal | Test limits | | | | | | Units |
|---|---|---|---|---|---|---|---|---|---|---|---|---|---|---|---|---|---|---|---|---|---|---|---|---|---|---|---|---|---|---|---|---|---|---|
| | | | 1 | 2 | 3 | 4 | 5 | 6 | 7 | 8 | 9 | 10 | 11 | 12 | 13 | 14 | 15 | 16 | 17 | 18 | 19 | 20 | 21 | 22 | 23 | 24 | | Subgroup 1 $T_A$ = 25°C | | Subgroup 2 $T_A$ = 125°C | | Subgroup 3 $T_A$ = -55°C | | |
| | | Symbol | COX | $CHX_7$ | $CHX_6$ | $CHX_5$ | $CHX_4$ | $CHX_3$ | $CHX_2$ | $CHX_1$ | $CHX_0$ | A | B | $V_{SS}$ | INH | C | $CHY_7$ | $CHY_6$ | COY | $CHY_5$ | $CHY_4$ | $CHY_3$ | $CHY_2$ | $CHY_1$ | $CHY_0$ | $V_{DD}$ | | | | | | | | |
| | | Test No. | | | | | | | | | | | | | | | | | | | | | | | | | | Min | Max | Min | Max | Min | Max | |
| $I_{IH2}$ 3/ | 3010 | 109 | | | | | | | | | | 18.0 V | 18.0 V | GND | GND | GND | GND | GND | | GND | GND | 18.0 V | GND | GND | GND | 18.0 V | $CHY_3$ | | 1.0 | | 45 | | | nA |
| | | 110 | | | | | | | | | | GND | GND | | | 18.0 V | | GND | | GND | 18.0 V | GND | | | | | $CHY_4$ | | | | | | | |
| | | 111 | | | | | | | | | | 18.0 V | GND | | | | | GND | | 18.0 V | GND | | | | | | $CHY_5$ | | | | | | | |
| | | 112 | | | | | | | | | | GND | 18.0 V | | | | | 18.0 V | | GND | | | | | | | $CHY_6$ | | | | | | | |
| | | 113 | | | | | | | | | | 18.0 V | 18.0 V | | | | 18.0 V | GND | | GND | | | | | | | $CHY_7$ | | | | | | | |
| $I_{IL1}$ 3/ | 3009 | 114 | | GND | GND | GND | GND | GND | GND | GND | GND | GND | GND | | | GND | GND | GND | | GND | | | | | | | All inputs | | -20 | | | | | |
| $I_{IL2}$ 3/ | | 115 | GND | | | | | | | | | 18.0 V | 18.0 V | | | 18.0 V | | | | | | | | | | | COX | | -1.0 | | -45 | | | |
| | | 116 | | | | | | | | | | 18.0 V | 18.0 V | | | | | | GND | | | | | | | | COY | | | | | | | |
| | | 117 | | 18.0 V | 18.0 V | 18.0 V | 18.0 V | 18.0 V | 18.0 V | 18.0 V | 18.0 V | GND | 18.0 V | | | | 18.0 V | 18.0 V | | 18.0 V | 18.0 V | 18.0 V | 18.0 V | 18.0 V | 18.0 V | | A | | | | | | | |
| | | 118 | | | | | | | | | | 18.0 V | GND | | | | | | | | | | | | | | B | | | | | | | |
| | | 119 | | | | | | | | | | 18.0 V | 18.0 V | | | GND | | | | | | | | | | | C | | | | | | | |
| | | 120 | | | | | | | | | | 18.0 V | 18.0 V | | | 18.0 V | | | | | | | | | | | INH | | | | | | | |
| | | 121 | | | | | | | | | GND | GND | GND | | | GND | | | | | | | | | | | $CHX_0$ | | | | | | | |
| | | 122 | | | | | | | | GND | 18.0 V | 18.0 V | GND | | | | | | | | | | | | | | $CHX_1$ | | | | | | | |
| | | 123 | | | | | | | GND | 18.0 V | | GND | 18.0 V | | | | | | | | | | | | | | $CHX_2$ | | | | | | | |
| | | 124 | | | | | | GND | 18.0 V | | | 18.0 V | 18.0 V | | | | | | | | | | | | | | $CHX_3$ | | | | | | | |
| | | 125 | | | | | GND | 18.0 V | | | | GND | GND | | | 18.0 V | | | | | | | | | | | $CHX_4$ | | | | | | | |
| | | 126 | | | | GND | 18.0 V | | | | | 18.0 V | GND | | | | | | | | | | | | | | $CHX_5$ | | | | | | | |
| | | 127 | | | GND | 18.0 V | 18.0 V | | | | | GND | 18.0 V | | | | | | | | | | | | | | $CHX_6$ | | | | | | | |
| | | 128 | | GND | 18.0 V | 18.0 V | 18.0 V | | | | | 18.0 V | 18.0 V | | | | | | | | | | | | | | $CHX_7$ | | | | | | | |
| | | 129 | | | | | | | | | | GND | GND | | | GND | 18.0 V | 18.0 V | | 18.0 V | 18.0 V | 18.0 V | 18.0 V | 18.0 V | GND | | $CHY_0$ | | | | | | | |
| | | 130 | | | | | | | | | | 18.0 V | GND | | | | | | | | | 18.0 V | 18.0 V | GND | 18.0 V | | $CHY_1$ | | | | | | | |
| | | 131 | | | | | | | | | | GND | 18.0 V | | | | | | | | | 18.0 V | GND | 18.0 V | | | $CHY_2$ | | | | | | | |
| | | 132 | | | | | | | | | | 18.0 V | 18.0 V | | | | | | | | | GND | 18.0 V | | | | $CHY_3$ | | | | | | | |
| | | 133 | | | | | | | | | | GND | GND | | | 18.0 V | | | | | GND | 18.0 V | | | | | $CHY_4$ | | | | | | | |
| | | 134 | | | | | | | | | | 18.0 V | GND | | | | | | | GND | 18.0 V | | | | | | $CHY_5$ | | | | | | | |
| | | 135 | | | | | | | | | | GND | 18.0 V | | | | | GND | | 18.0 V | 18.0 V | | | | | | $CHY_6$ | | | | | | | |
| | | 136 | | | | | | | | | | 18.0 V | 18.0 V | | | | GND | 18.0 V | | 18.0 V | 18.0 V | | | | | | $CHY_7$ | | | | | | | |

See footnotes at end of table.

TABLE III. Group A inspection for device type 02 - Continued.

| Symbol | MIL-STD-883 method | Cases J, K,Z,Y,U | Terminal conditions 1/ | | | | | | | | | | | | | | | | | | | | | | | Measured terminal | Test limits | | | | | | Units |
|---|---|---|---|---|---|---|---|---|---|---|---|---|---|---|---|---|---|---|---|---|---|---|---|---|---|---|---|---|---|---|---|---|---|
| | | | 1 | 2 | 3 | 4 | 5 | 6 | 7 | 8 | 9 | 10 | 11 | 12 | 13 | 14 | 15 | 16 | 17 | 18 | 19 | 20 | 21 | 22 | 23 | 24 | | Subgroup 1 $T_A$ = 25°C | | Subgroup 2 $T_A$ = 125°C | | Subgroup 3 $T_A$ = -55°C | | |
| | | Symbol | COX | $CHX_7$ | $CHX_6$ | $CHX_5$ | $CHX_4$ | $CHX_3$ | $CHX_2$ | $CHX_1$ | $CHX_0$ | A | B | $V_{SS}$ | INH | C | $CHY_7$ | $CHY_6$ | COY | $CHY_5$ | $CHY_4$ | $CHY_3$ | $CHY_2$ | $CHY_1$ | $CHY_0$ | $V_{DD}$ | | Min | Max | Min | Max | Min | Max | |
| | | Test No. | | | | | | | | | | | | | | | | | | | | | | | | | | | | | | | |
| $R_{ON11}$ | Fig. 6 | 137 | $V_{IS}$ = -2.0 V | | | | | | | | $V_{OS}$ | -2.5 V | -2.5 V | -2.5 V | -2.5 V | -2.5 V | | | | | | | | | | 2.5 V | $CHX_0$ | | 500 | | 700 | | 350 | Ω |
| | | 138 | | | | | | | | $V_{OS}$ | | 2.5 V | -2.5 V | | | | | | | | | | | | | | $CHX_1$ | | | | | | | |
| | | 139 | | | | | | | $V_{OS}$ | | | -2.5 V | 2.5 V | | | | | | | | | | | | | | $CHX_2$ | | | | | | | |
| | | 140 | | | | | | $V_{OS}$ | | | | 2.5 V | 2.5 V | | | | | | | | | | | | | | $CHX_3$ | | | | | | | |
| | | 141 | | | | | $V_{OS}$ | | | | | -2.5 V | -2.5 V | | | 2.5 V | | | | | | | | | | | $CHX_4$ | | | | | | | |
| | | 142 | | | | $V_{OS}$ | | | | | | 2.5 V | -2.5 V | | | | | | | | | | | | | | $CHX_5$ | | | | | | | |
| | | 143 | | | $V_{OS}$ | | | | | | | -2.5 V | 2.5 V | | | | | | | | | | | | | | $CHX_6$ | | | | | | | |
| | | 144 | | $V_{OS}$ | | | | | | | | 2.5 V | 2.5 V | | | | | | | | | | | | | | $CHX_7$ | | | | | | | |
| | | 145 | | | | | | | | | | -2.5 V | -2.5 V | | | -2.5 V | | | $V_{IS}$ = -2.0 V | | | | | | $V_{OS}$ | | $CHY_0$ | | | | | | | |
| | | 146 | | | | | | | | | | 2.5 V | -2.5 V | | | | | | | | | | | $V_{OS}$ | | | $CHY_1$ | | | | | | | |
| | | 147 | | | | | | | | | | -2.5 V | 2.5 V | | | | | | | | | | $V_{OS}$ | | | | $CHY_2$ | | | | | | | |
| | | 148 | | | | | | | | | | 2.5 V | 2.5 V | | | | | | | | | $V_{OS}$ | | | | | $CHY_3$ | | | | | | | |
| | | 149 | | | | | | | | | | -2.5 V | -2.5 V | | | 2.5 V | | | | | $V_{OS}$ | | | | | | $CHY_4$ | | | | | | | |
| | | 150 | | | | | | | | | | 2.5 V | -2.5 V | | | | | | | $V_{OS}$ | | | | | | | $CHY_5$ | | | | | | | |
| | | 151 | | | | | | | | | | -2.5 V | 2.5 V | | | | | $V_{OS}$ | | | | | | | | | $CHY_6$ | | | | | | | |
| | | 152 | | | | | | | | | | 2.5 V | 2.5 V | | | | $V_{OS}$ | | | | | | | | | | $CHY_7$ | | | | | | | |

See footnotes at end of table.

TABLE III. Group A inspection for device type 02 - Continued.

| Symbol | MIL-STD-883 method | Cases J, K,Z,Y,U | Terminal conditions 1/ | | | | | | | | | | | | | | | | | | | | | | | | Measured terminal | Test limits | | | | | | Units |
|---|---|---|---|---|---|---|---|---|---|---|---|---|---|---|---|---|---|---|---|---|---|---|---|---|---|---|---|---|---|---|---|---|---|---|
| | | | 1 | 2 | 3 | 4 | 5 | 6 | 7 | 8 | 9 | 10 | 11 | 12 | 13 | 14 | 15 | 16 | 17 | 18 | 19 | 20 | 21 | 22 | 23 | 24 | | Subgroup 1 $T_A$ = 25°C | | Subgroup 2 $T_A$ = 125°C | | Subgroup 3 $T_A$ = -55°C | | |
| | | Symbol | COX | $CHX_7$ | $CHX_6$ | $CHX_5$ | $CHX_4$ | $CHX_3$ | $CHX_2$ | $CHX_1$ | $CHX_0$ | A | B | $V_{SS}$ | INH | C | $CHY_7$ | $CHY_6$ | COY | $CHY_5$ | $CHY_4$ | $CHY_3$ | $CHY_2$ | $CHY_1$ | $CHY_0$ | $V_{DD}$ | | | | | | | | |
| | | Test No. | | | | | | | | | | | | | | | | | | | | | | | | | | Min | Max | Min | Max | Min | Max | |
| $R_{ON12}$ | Fig. 6 | 153-168 | Same tests and terminal conditions as for tests 137-152, except $V_{IS}$ = -0.9 V and limits are as shown. | | | | | | | | | | | | | | | | | | | | | | | | | | 700 | | 900 | | 500. | Ω |
| $R_{ON13}$ | | 169-184 | Same tests and terminal conditions as for tests 137-152, except $V_{IS}$ = 1.0 V and limits are as shown. | | | | | | | | | | | | | | | | | | | | | | | | | | 600 | | 800 | | 400 | |
| $R_{ON14}$ | | 185-200 | Same tests and terminal conditions as for tests 137-152, except $V_{IS}$ = 2.0 V and limits are as shown. | | | | | | | | | | | | | | | | | | | | | | | | | | 500 | | 700 | | 300 | |
| $R_{ON11}$ | | 201 | $V_{OS}$ | | | | | | | | $V_{IS}$ = -2.0 V | -2.5 V | -2.5 V | -2.5 V | -2.5 V | -2.5 V | | | | | | | | | | 2.5 V | COX | | 500 | | 700 | | 350 | |
| | | 202 | | | | | | | | $V_{IS}$ = -2.0 V | | 2.5 V | -2.5 V | | | | | | | | | | | | | | | | | | | | | |
| | | 203 | | | | | | | $V_{IS}$ = -2.0 V | | | -2.5 V | 2.5 V | | | | | | | | | | | | | | | | | | | | | |
| | | 204 | | | | | | $V_{IS}$ = -2.0 V | | | | 2.5 V | 2.5 V | | | | | | | | | | | | | | | | | | | | | |
| | | 205 | | | | | $V_{IS}$ = -2.0 V | | | | | -2.5 V | -2.5 V | | | 2.5 V | | | | | | | | | | | | | | | | | | |
| | | 206 | | | | $V_{IS}$ = -2.0 V | | | | | | 2.5 V | -2.5 V | | | | | | | | | | | | | | | | | | | | | |
| | | 207 | | | $V_{IS}$ = -2.0 V | | | | | | | -2.5 V | 2.5 V | | | | | | | | | | | | | | | | | | | | | |
| | | 208 | | $V_{IS}$ = -2.0 V | | | | | | | | 2.5 V | 2.5 V | | | | | | | | | | | | | | | | | | | | | |
| | | 209 | | | | | | | | | | -2.5 V | -2.5 V | | | -2.5 V | | | $V_{OS}$ | | | | | | $V_{IS}$ = -2.0 V | | COY | | | | | | | |
| | | 210 | | | | | | | | | | 2.5 V | -2.5 V | | | | | | | | | | | $V_{IS}$ = -2.0 V | | | | | | | | | | |
| | | 211 | | | | | | | | | | -2.5 V | 2.5 V | | | | | | | | | | $V_{IS}$ = -2.0 V | | | | | | | | | | | |
| | | 212 | | | | | | | | | | 2.5 V | 2.5 V | | | | | | | | | $V_{IS}$ = -2.0 V | | | | | | | | | | | | |
| | | 213 | | | | | | | | | | -2.5 V | -2.5 V | | | 2.5 V | | | | | $V_{IS}$ = -2.0 V | | | | | | | | | | | | | |

See footnotes at end of table.

TABLE III. Group A inspection for device type 02 - Continued.

| Symbol | MIL-STD-883 method | Cases J, K,Z,Y,U | Terminal conditions 1/ | | | | | | | | | | | | | | | | | | | | | | | | Measured terminal | Test limits | | | | | | Units |
|---|---|---|---|---|---|---|---|---|---|---|---|---|---|---|---|---|---|---|---|---|---|---|---|---|---|---|---|---|---|---|---|---|---|---|
| | | | 1 | 2 | 3 | 4 | 5 | 6 | 7 | 8 | 9 | 10 | 11 | 12 | 13 | 14 | 15 | 16 | 17 | 18 | 19 | 20 | 21 | 22 | 23 | 24 | | Subgroup 1 $T_A$ = 25°C | | Subgroup 2 $T_A$ = 125°C | | Subgroup 3 $T_A$ = -55°C | | |
| | | Symbol | COX | $CHX_7$ | $CHX_6$ | $CHX_5$ | $CHX_4$ | $CHX_3$ | $CHX_2$ | $CHX_1$ | $CHX_0$ | A | B | $V_{SS}$ | INH | C | $CHY_7$ | $CHY_6$ | COY | $CHY_5$ | $CHY_4$ | $CHY_3$ | $CHY_2$ | $CHY_1$ | $CHY_0$ | $V_{DD}$ | | | | | | | | |
| | | Test No. | | | | | | | | | | | | | | | | | | | | | | | | | | Min | Max | Min | Max | Min | Max | |
| $R_{ON11}$ | Fig. 6 | 214 | | | | | | | | | | 2.5 V | -2.5 V | -2.5 V | -2.5 V | 2.5 V | | | $V_{OS}$ | $V_{IS}$ = -2.0 V | | | | | | 2.5 V | COY | | 500 | | 700 | | 350 | Ω |
| | | 215 | | | | | | | | | | -2.5 V | 2.5 V | | | | | $V_{IS}$ = -2.0 V | | | | | | | | | | | | | | | | |
| | | 216 | | | | | | | | | | 2.5 V | 2.5 V | | | | $V_{IS}$ = -2.0 V | | | | | | | | | | | | | | | | | |
| $R_{ON12}$ | | 217-232 | Same tests and terminal conditions as for tests 201-216, except $V_{IS}$ = -0.9 V and limits are as shown. | | | | | | | | | | | | | | | | | | | | | | | | | | 700 | | 900 | | 500 | |
| $R_{ON13}$ | | 233-248 | Same tests and terminal conditions as for tests 201-216, except $V_{IS}$ = 1.0 V and limits are as shown. | | | | | | | | | | | | | | | | | | | | | | | | | | 600 | | 800 | | 400 | |
| $R_{ON14}$ | | 249-264 | Same tests and terminal conditions as for tests 201-216, except $V_{IS}$ = 2.0 V and limits are as shown. | | | | | | | | | | | | | | | | | | | | | | | | | | 500 | | 700 | | 300 | |
| $R_{ON21}$ | Fig. 7 | 265 | $V_{IS}$ = -5.0 V | | | | | | | | $V_{OS}$ | -5.0 V | -5.0 V | -5.0 V | -5.0 V | -5.0 V | | | | | | | | | | 5.0 V | $CHX_0$ | | 200 | | 260 | | 140 | |
| | | 266 | | | | | | | | $V_{OS}$ | | 5.0 V | -5.0 V | | | | | | | | | | | | | | $CHX_1$ | | | | | | | |
| | | 267 | | | | | | | $V_{OS}$ | | | -5.0 V | 5.0 V | | | | | | | | | | | | | | $CHX_2$ | | | | | | | |
| | | 268 | | | | | | $V_{OS}$ | | | | 5.0 V | 5.0 V | | | | | | | | | | | | | | $CHX_3$ | | | | | | | |
| | | 269 | | | | | $V_{OS}$ | | | | | -5.0 V | -5.0 V | | | 5.0 V | | | | | | | | | | | $CHX_4$ | | | | | | | |
| | | 270 | | | | $V_{OS}$ | | | | | | 5.0 V | -5.0 V | | | | | | | | | | | | | | $CHX_5$ | | | | | | | |
| | | 271 | | | $V_{OS}$ | | | | | | | -5.0 V | 5.0 V | | | | | | | | | | | | | | $CHX_6$ | | | | | | | |
| | | 272 | | $V_{OS}$ | | | | | | | | 5.0 V | 5.0 V | | | | | | | | | | | | | | $CHX_7$ | | | | | | | |
| | | 273 | | | | | | | | | | -5.0 V | -5.0 V | | | -5.0 V | | | $V_{IS}$ = -5.0 V | | | | | | $V_{OS}$ | | $CHY_0$ | | | | | | | |

See footnotes at end of table.

TABLE III. Group A inspection for device type 02 - Continued.

| Symbol | MIL-STD-883 method | Cases J, K,Z,Y,U | Terminal conditions 1/ | | | | | | | | | | | | | | | | | | | | | | | | Measured terminal | Test limits | | | | | | Units |
|---|---|---|---|---|---|---|---|---|---|---|---|---|---|---|---|---|---|---|---|---|---|---|---|---|---|---|---|---|---|---|---|---|---|---|
| | | | 1 | 2 | 3 | 4 | 5 | 6 | 7 | 8 | 9 | 10 | 11 | 12 | 13 | 14 | 15 | 16 | 17 | 18 | 19 | 20 | 21 | 22 | 23 | 24 | | Subgroup 1 $T_A$ = 25°C | | Subgroup 2 $T_A$ = 125°C | | Subgroup 3 $T_A$ = -55°C | | |
| | | Symbol | COX | $CHX_7$ | $CHX_6$ | $CHX_5$ | $CHX_4$ | $CHX_3$ | $CHX_2$ | $CHX_1$ | $CHX_0$ | A | B | $V_{SS}$ | INH | C | $CHY_7$ | $CHY_6$ | COY | $CHY_5$ | $CHY_4$ | $CHY_3$ | $CHY_2$ | $CHY_1$ | $CHY_0$ | $V_{DD}$ | | Min | Max | Min | Max | Min | Max | |
| | | Test No. | | | | | | | | | | | | | | | | | | | | | | | | | | | | | | | | |
| $R_{ON21}$ | Fig. 7 | 274 | | | | | | | | | | 5.0 V | -5.0 V | -5.0 V | -5.0 V | -5.0 V | | | $V_{IS}$ = -5.0 V | | | | | $V_{OS}$ | | 5.0 V | $CHY_1$ | | 200 | | 260 | | 140 | Ω |
| | | 275 | | | | | | | | | | -5.0 V | 5.0 V | | | | | | | | | | $V_{OS}$ | | | | $CHY_2$ | | | | | | | |
| | | 276 | | | | | | | | | | 5.0 V | 5.0 V | | | | | | | | | $V_{OS}$ | | | | | $CHY_3$ | | | | | | | |
| | | 277 | | | | | | | | | | -5.0 V | -5.0 V | | | 5.0 V | | | | | $V_{OS}$ | | | | | | $CHY_4$ | | | | | | | |
| | | 278 | | | | | | | | | | 5.0 V | -5.0 V | | | | | | | $V_{OS}$ | | | | | | | $CHY_5$ | | | | | | | |
| | | 279 | | | | | | | | | | -5.0 V | 5.0 V | | | | | $V_{OS}$ | | | | | | | | | $CHY_6$ | | | | | | | |
| | | 280 | | | | | | | | | | 5.0 V | 5.0 V | | | | $V_{OS}$ | | | | | | | | | | $CHY_7$ | | | | | | | |
| $R_{ON22}$ | | 281-296 | Same tests and terminal conditions as for tests 265-280, except $V_{IS}$ = -3.0 V and limits are as shown. | | | | | | | | | | | | | | | | | | | | | | | | | | 250 | | 325 | | 175 | |
| $R_{ON23}$ | | 297-312 | Same tests and terminal conditions as for tests 265-280, except $V_{IS}$ = 3.5 V and limits are as shown. | | | | | | | | | | | | | | | | | | | | | | | | | | 250 | | 325 | | 175 | |
| $R_{ON24}$ | | 313-328 | Same tests and terminal conditions as for tests 265-280, except $V_{IS}$ = 5.0 V and limits are as shown. | | | | | | | | | | | | | | | | | | | | | | | | | | 200 | | 260 | | 140 | |
| $R_{ON21}$ | | 329 | $V_{OS}$ | | | | | | | | $V_{IS}$ = -5.0 V | -5.0 V | -5.0 V | -5.0 V | -5.0 V | -5.0 V | | | | | | | | | | 5.0 V | COX | | 200 | | 260 | | 140 | |
| | | 330 | | | | | | | | $V_{IS}$ = -5.0 V | | 5.0 V | -5.0 V | | | | | | | | | | | | | | | | | | | | | |
| | | 331 | | | | | | | $V_{IS}$ = -5.0 V | | | -5.0 V | 5.0 V | | | | | | | | | | | | | | | | | | | | | |
| | | 332 | | | | | | $V_{IS}$ = -5.0 V | | | | 5.0 V | 5.0 V | | | | | | | | | | | | | | | | | | | | | |
| | | 333 | | | | | $V_{IS}$ = -5.0 V | | | | | -5.0 V | -5.0 V | | | 5.0 V | | | | | | | | | | | | | | | | | | |
| | | 334 | | | | $V_{IS}$ = -5.0 V | | | | | | 5.0 V | -5.0 V | | | 5.0 V | | | | | | | | | | | | | | | | | | |

See footnotes at end of table.

TABLE III. Group A inspection for device type 02 - Continued.

| Symbol | MIL-STD-883 method | Cases J, K,Z,Y,U | Terminal conditions 1/ | | | | | | | | | | | | | | | | | | | | | | | | Measured terminal | Test limits | | | | | | Units |
|---|---|---|---|---|---|---|---|---|---|---|---|---|---|---|---|---|---|---|---|---|---|---|---|---|---|---|---|---|---|---|---|---|---|---|
| | | | 1 | 2 | 3 | 4 | 5 | 6 | 7 | 8 | 9 | 10 | 11 | 12 | 13 | 14 | 15 | 16 | 17 | 18 | 19 | 20 | 21 | 22 | 23 | 24 | | Subgroup 1 $T_A$ = 25°C | | Subgroup 2 $T_A$ = 125°C | | Subgroup 3 $T_A$ = -55°C | | |
| | | Symbol | COX | $CHX_7$ | $CHX_6$ | $CHX_5$ | $CHX_4$ | $CHX_3$ | $CHX_2$ | $CHX_1$ | $CHX_0$ | A | B | $V_{SS}$ | INH | C | $CHY_7$ | $CHY_6$ | COY | $CHY_5$ | $CHY_4$ | $CHY_3$ | $CHY_2$ | $CHY_1$ | $CHY_0$ | $V_{DD}$ | | Min | Max | Min | Max | Min | Max | |
| | | Test No. | | | | | | | | | | | | | | | | | | | | | | | | | | | | | | | | |
| $R_{ON21}$ | Fig. 7 | 335 | $V_{OS}$ | | $V_{IS}$ = -5.0 V | | | | | | | -5.0 V | 5.0 V | -5.0 V | -5.0 V | 5.0 V | | | | | | | | | | 5.0 V | COX | | 200 | | 260 | | 140 | Ω |
| | | 336 | $V_{OS}$ | $V_{IS}$ = -5.0 V | | | | | | | | 5.0 V | 5.0 V | | | 5.0 V | | | | | | | | | | | COX | | | | | | | |
| | | 337 | | | | | | | | | | -5.0 V | -5.0 V | | | -5.0 V | | | $V_{OS}$ | | | | | | $V_{IS}$ = -5.0 V | | COY | | | | | | | |
| | | 338 | | | | | | | | | | 5.0 V | -5.0 V | | | | | | | | | | | $V_{IS}$ = -5.0 V | | | | | | | | | | |
| | | 339 | | | | | | | | | | -5.0 V | 5.0 V | | | | | | | | | | $V_{IS}$ = -5.0 V | | | | | | | | | | | |
| | | 340 | | | | | | | | | | 5.0 V | 5.0 V | | | | | | | | | $V_{IS}$ = -5.0 V | | | | | | | | | | | | |
| | | 341 | | | | | | | | | | -5.0 V | -5.0 V | | | 5.0 V | | | | | $V_{IS}$ = -5.0 V | | | | | | | | | | | | | |
| | | 342 | | | | | | | | | | 5.0 V | -5.0 V | | | | | | | $V_{IS}$ = -5.0 V | | | | | | | | | | | | | | |
| | | 343 | | | | | | | | | | -5.0 V | 5.0 V | | | | | $V_{IS}$ = -5.0 V | | | | | | | | | | | | | | | | |
| | | 344 | | | | | | | | | | 5.0 V | 5.0 V | | | | $V_{IS}$ = -5.0 V | | | | | | | | | | | | | | | | | |
| $R_{ON22}$ | | 345-360 | Same tests and terminal conditions as for tests 329-344, except $V_{IS}$ = -3.0 V and limits are as shown. | | | | | | | | | | | | | | | | | | | | | | | | | | 250 | | 325 | | 175 | |
| $R_{ON23}$ | | 361-376 | Same tests and terminal conditions as for tests 329-344, except $V_{IS}$ = 3.5 V and limits are as shown. | | | | | | | | | | | | | | | | | | | | | | | | | | 250 | | 325 | | 175 | |
| $R_{ON24}$ | | 377-392 | Same tests and terminal conditions as for tests 329-344, except $V_{IS}$ = 5.0 V and limits are as shown. | | | | | | | | | | | | | | | | | | | | | | | | | | 200 | | 260 | | 140 | |
| $R_{ON31}$ | Fig. 8 | 393 | $V_{IS}$ = -7.5 V | | | | | | | | $V_{OS}$ | -7.5 V | -7.5 V | -7.5 V | -7.5 V | -7.5 V | | | | | | | | | | 7.5 V | $CHX_0$ | | 150 | | 200 | | 100 | |
| $R_{ON31}$ | Fig. 8 | 394 | $V_{IS}$ = -7.5 V | | | | | | | $V_{OS}$ | | 7.5 V | -7.5 V | -7.5 V | -7.5 V | -7.5 V | | | | | | | | | | 7.5 V | $CHX_1$ | | 150 | | 200 | | 100 | |

See footnotes at end of table.

TABLE III. Group A inspection for device type 02 - Continued.

| Symbol | MIL-STD-883 method | Cases J, K, Z, Y, U | Terminal conditions 1/ | | | | | | | | | | | | | | | | | | | | | | | | Measured terminal | Test limits | | | | | | Units |
|---|---|---|---|---|---|---|---|---|---|---|---|---|---|---|---|---|---|---|---|---|---|---|---|---|---|---|---|---|---|---|---|---|---|---|
| | | | 1 | 2 | 3 | 4 | 5 | 6 | 7 | 8 | 9 | 10 | 11 | 12 | 13 | 14 | 15 | 16 | 17 | 18 | 19 | 20 | 21 | 22 | 23 | 24 | | Subgroup 1 $T_A$ = 25°C | | Subgroup 2 $T_A$ = 125°C | | Subgroup 3 $T_A$ = -55°C | | |
| | | Symbol | COX | $CHX_7$ | $CHX_6$ | $CHX_5$ | $CHX_4$ | $CHX_3$ | $CHX_2$ | $CHX_1$ | $CHX_0$ | A | B | $V_{SS}$ | INH | C | $CHY_7$ | $CHY_6$ | COY | $CHY_5$ | $CHY_4$ | $CHY_3$ | $CHY_2$ | $CHY_1$ | $CHY_0$ | $V_{DD}$ | | | | | | | | |
| | | Test No. | | | | | | | | | | | | | | | | | | | | | | | | | | Min | Max | Min | Max | Min | Max | |
| $R_{ON31}$ | Fig. 8 | 395 | $V_{IS}$ = -7.5 V | | | | | | $V_{OS}$ | | | -7.5 V | 7.5 V | -7.5 V | -7.5 V | -7.5 V | | | | | | | | | | 7.5 V | $CHX_2$ | | 150 | | 200 | | 100 | Ω |
| | | 396 | | | | | | $V_{OS}$ | | | | 7.5 V | 7.5 V | | | -7.5 V | | | | | | | | | | | $CHX_3$ | | | | | | | |
| | | 397 | | | | | $V_{OS}$ | | | | | -7.5 V | -7.5 V | | | 7.5 V | | | | | | | | | | | $CHX_4$ | | | | | | | |
| | | 398 | | | | $V_{OS}$ | | | | | | 7.5 V | -7.5 V | | | | | | | | | | | | | | $CHX_5$ | | | | | | | |
| | | 399 | | | $V_{OS}$ | | | | | | | -7.5 V | 7.5 V | | | | | | | | | | | | | | $CHX_6$ | | | | | | | |
| | | 400 | | $V_{OS}$ | | | | | | | | 7.5 V | 7.5 V | | | | | | | | | | | | | | $CHX_7$ | | | | | | | |
| | | 401 | | | | | | | | | | -7.5 V | -7.5 V | | | -7.5 V | | | $V_{IS}$ = -7.5 V | | | | | | $V_{OS}$ | | $CHY_0$ | | | | | | | |
| | | 402 | | | | | | | | | | 7.5 V | -7.5 V | | | | | | | | | | | $V_{OS}$ | | | $CHY_1$ | | | | | | | |
| | | 403 | | | | | | | | | | -7.5 V | 7.5 V | | | | | | | | | | $V_{OS}$ | | | | $CHY_2$ | | | | | | | |
| | | 404 | | | | | | | | | | 7.5 V | 7.5 V | | | | | | | | | $V_{OS}$ | | | | | $CHY_3$ | | | | | | | |
| | | 405 | | | | | | | | | | -7.5 V | -7.5 V | | | 7.5 V | | | | | $V_{OS}$ | | | | | | $CHY_4$ | | | | | | | |
| | | 406 | | | | | | | | | | 7.5 V | -7.5 V | | | | | | | $V_{OS}$ | | | | | | | $CHY_5$ | | | | | | | |
| | | 407 | | | | | | | | | | -7.5 V | 7.5 V | | | | | $V_{OS}$ | | | | | | | | | $CHY_6$ | | | | | | | |
| | | 408 | | | | | | | | | | 7.5 V | 7.5 V | | | | $V_{OS}$ | | | | | | | | | | $CHY_7$ | | | | | | | |
| $R_{ON32}$ | | 409-424 | Same tests and terminal conditions as for tests 393-408, except $V_{IS}$ = -5.0 V and limits are as shown. | | | | | | | | | | | | | | | | | | | | | | | | | | 170 | | 230 | | 120 | |
| $R_{ON33}$ | | 425-440 | Same tests and terminal conditions as for tests 393-408, except $V_{IS}$ = 0 V and limits are as shown. | | | | | | | | | | | | | | | | | | | | | | | | | | 170 | | 230 | | 120 | |
| $R_{ON34}$ | | 441-456 | Same tests and terminal conditions as for tests 393-408, except $V_{IS}$ = 6.0 V and limits are as shown. | | | | | | | | | | | | | | | | | | | | | | | | | | 170 | | 230 | | 120 | |
| $R_{ON35}$ | | 457-472 | Same tests and terminal conditions as for tests 393-408, except $V_{IS}$ = 7.5 V and limits are as shown. | | | | | | | | | | | | | | | | | | | | | | | | | | 150 | | 200 | | 100 | |

TABLE III. Group A inspection for device type 02 - Continued.

| Symbol | MIL-STD-883 method | Cases J, K,Z,Y,U | Terminal conditions 1/ | | | | | | | | | | | | | | | | | | | | | | | Measured terminal | Test limits | | | | | | Units |
|---|---|---|---|---|---|---|---|---|---|---|---|---|---|---|---|---|---|---|---|---|---|---|---|---|---|---|---|---|---|---|---|---|---|
| | | | 1 | 2 | 3 | 4 | 5 | 6 | 7 | 8 | 9 | 10 | 11 | 12 | 13 | 14 | 15 | 16 | 17 | 18 | 19 | 20 | 21 | 22 | 23 | 24 | | Subgroup 1 $T_A$ = 25°C | | Subgroup 2 $T_A$ = 125°C | | Subgroup 3 $T_A$ = -55°C | | |
| | | Symbol | COX | $CHX_7$ | $CHX_6$ | $CHX_5$ | $CHX_4$ | $CHX_3$ | $CHX_2$ | $CHX_1$ | $CHX_0$ | A | B | $V_{SS}$ | INH | C | $CHY_7$ | $CHY_6$ | COY | $CHY_5$ | $CHY_4$ | $CHY_3$ | $CHY_2$ | $CHY_1$ | $CHY_0$ | $V_{DD}$ | | Min | Max | Min | Max | Min | Max | |
| | | Test No. | | | | | | | | | | | | | | | | | | | | | | | | | | | | | | | |
| $R_{ON31}$ | Fig. 8 | 473 | $V_{OS}$ | | | | | | | | $V_{IS}$ = -7.5 V | -7.5 V | -7.5 V | -7.5 V | -7.5 V | -7.5 V | | | | | | | | | | 7.5 V | COX | | 150 | | 200 | | 100 | Ω |
| | | 474 | | | | | | | | $V_{IS}$ = -7.5 V | | 7.5 V | -7.5 V | | | | | | | | | | | | | | | | | | | | |
| | | 475 | | | | | | | $V_{IS}$ = -7.5 V | | | -7.5 V | 7.5 V | | | | | | | | | | | | | | | | | | | | |
| | | 476 | | | | | | $V_{IS}$ = -7.5 V | | | | 7.5 V | 7.5 V | | | | | | | | | | | | | | | | | | | | |
| | | 477 | | | | | $V_{IS}$ = -7.5 V | | | | | -7.5 V | -7.5 V | | | 7.5 V | | | | | | | | | | | | | | | | | |
| | | 478 | | | | $V_{IS}$ = -7.5 V | | | | | | 7.5 V | -7.5 V | | | | | | | | | | | | | | | | | | | | |
| | | 479 | | | $V_{IS}$ = -7.5 V | | | | | | | -7.5 V | 7.5 V | | | | | | | | | | | | | | | | | | | | |
| | | 480 | | $V_{IS}$ = -7.5 V | | | | | | | | 7.5 V | 7.5 V | | | | | | | | | | | | | | | | | | | | |
| | | 481 | | | | | | | | | | -7.5 V | -7.5 V | | | -7.5 V | | | $V_{OS}$ | | | | | | $V_{IS}$ = -7.5 V | | COY | | | | | | | |
| | | 482 | | | | | | | | | | 7.5 V | -7.5 V | | | | | | | | | | | $V_{IS}$ = -7.5 V | | | | | | | | | | |
| | | 483 | | | | | | | | | | -7.5 V | 7.5 V | | | | | | | | | | $V_{IS}$ = -7.5 V | | | | | | | | | | | |
| | | 484 | | | | | | | | | | 7.5 V | 7.5 V | | | | | | | | | $V_{IS}$ = -7.5 V | | | | | | | | | | | | |
| | | 485 | | | | | | | | | | -7.5 V | -7.5 V | | | 7.5 V | | | | | $V_{IS}$ = -7.5 V | | | | | | | | | | | | | |
| | | 486 | | | | | | | | | | 7.5 V | -7.5 V | | | | | | | $V_{IS}$ = -7.5 V | | | | | | | | | | | | | | |
| | | 487 | | | | | | | | | | -7.5 V | 7.5 V | | | | | $V_{IS}$ = -7.5 V | | | | | | | | | | | | | | | | |
| | | 488 | | | | | | | | | | 7.5 V | 7.5 V | | | | $V_{IS}$ = -7.5 V | | | | | | | | | | | | | | | | | |

See footnotes at end of table.

TABLE III. Group A inspection for device type 02 - Continued.

| Symbol | MIL-STD-883 method | Cases J, K,Z,Y,U | Terminal conditions 1/ | | | | | | | | | | | | | | | | | | | | | | | | Measured terminal | Test limits | | | | | | Units |
|---|---|---|---|---|---|---|---|---|---|---|---|---|---|---|---|---|---|---|---|---|---|---|---|---|---|---|---|---|---|---|---|---|---|---|
| | | | 1 | 2 | 3 | 4 | 5 | 6 | 7 | 8 | 9 | 10 | 11 | 12 | 13 | 14 | 15 | 16 | 17 | 18 | 19 | 20 | 21 | 22 | 23 | 24 | | Subgroup 1 $T_A$ = 25°C | | Subgroup 2 $T_A$ = 125°C | | Subgroup 3 $T_A$ = -55°C | | |
| | | Symbol | COX | $CHX_7$ | $CHX_6$ | $CHX_5$ | $CHX_4$ | $CHX_3$ | $CHX_2$ | $CHX_1$ | $CHX_0$ | A | B | $V_{SS}$ | INH | C | $CHY_7$ | $CHY_6$ | COY | $CHY_5$ | $CHY_4$ | $CHY_3$ | $CHY_2$ | $CHY_1$ | $CHY_0$ | $V_{DD}$ | | | | | | | | |
| | | Test No. | | | | | | | | | | | | | | | | | | | | | | | | | | Min | Max | Min | Max | Min | Max | |
| $R_{ON32}$ | Fig. 8 | 489-504 | Same tests and terminal conditions as for tests 473-488, except $V_{IS}$ = -5.0 V and limits are as shown. | | | | | | | | | | | | | | | | | | | | | | | | | | 170 | | 230 | | 120 | Ω |
| $R_{ON33}$ | ↓ | 505-520 | Same tests and terminal conditions as for tests 473-488, except $V_{IS}$ = 0 V and limits are as shown. | | | | | | | | | | | | | | | | | | | | | | | | | | 170 | | 230 | | 120 | ↓ |
| $R_{ON34}$ | ↓ | 521-536 | Same tests and terminal conditions as for tests 473-488, except $V_{IS}$ = 6.0 V and limits are as shown. | | | | | | | | | | | | | | | | | | | | | | | | | | 170 | | 230 | | 120 | ↓ |
| $R_{ON35}$ | ↓ | 537-552 | Same tests and terminal conditions as for tests 473-488, except $V_{IS}$ = 7.5 V and limits are as shown. | | | | | | | | | | | | | | | | | | | | | | | | | | 150 | | 200 | | 100 | ↓ |
| $V_{IH1}$ | 7/ | 553 | 5.0 V | | | | | | | | | GND | GND | GND | GND | GND | | | GND | | | | | | | 5.0 V | $CHX_7$ | 4.5 | | 4.5 | | 4.5 | | Vdc |
| ↓ | ↓ | 554 | ↓ | | | | | | | | | 3.5 V | GND | ↓ | ↓ | ↓ | | | ↓ | | | | | | | ↓ | $CHX_6$ | ↓ | | ↓ | | ↓ | | ↓ |
| | | 555 | | | | | | | | | | GND | 3.5 V | | | | | | | | | | | | | | $CHX_5$ | | | | | | | |
| | | 556 | | | | | | | | | | 3.5 V | 3.5 V | | | | | | | | | | | | | | $CHX_4$ | | | | | | | |
| | | 557 | | | | | | | | | | GND | GND | | | 3.5 V | | | | | | | | | | | $CHX_3$ | | | | | | | |
| | | 558 | | | | | | | | | | 3.5 V | GND | | | ↓ | | | | | | | | | | | $CHX_2$ | | | | | | | |
| | | 559 | | | | | | | | | | GND | 3.5 V | | | | | | | | | | | | | | $CHX_1$ | | | | | | | |
| | | 560 | | | | | | | | | | 3.5 V | 3.5 V | | | | | | | | | | | | | | $CHX_0$ | | | | | | | |
| | | 561 | GND | | | | | | | | | GND | GND | | | GND | | | 5.0 V | | | | | | | | $CHY_7$ | | | | | | | |
| | | 562 | ↓ | | | | | | | | | 3.5 V | GND | | | ↓ | | | ↓ | | | | | | | | $CHY_6$ | | | | | | | |
| | | 563 | | | | | | | | | | GND | 3.5 V | | | | | | | | | | | | | | $CHY_5$ | | | | | | | |
| | | 564 | | | | | | | | | | 3.5 V | 3.5 V | | | | | | | | | | | | | | $CHY_4$ | | | | | | | |
| | | 565 | | | | | | | | | | GND | GND | | | 3.5 V | | | | | | | | | | | $CHY_3$ | | | | | | | |
| | | 566 | | | | | | | | | | 3.5 V | GND | | | ↓ | | | | | | | | | | | $CHY_2$ | | | | | | | |
| | | 567 | | | | | | | | | | GND | 3.5 V | | | | | | | | | | | | | | $CHY_1$ | | | | | | | |
| | | 568 | | | | | | | | | | 3.5 V | 3.5 V | | | | | | | | | | | | | | $CHY_0$ | | | | | | | |
| $V_{IH2}$ | ↓ | 569 | 10.0 V | | | | | | | | | GND | GND | | | GND | | | GND | | | | | | | 10.0 V | $CHX_7$ | 9.0 | | 9.0 | | 9.0 | | |
| ↓ | | 570 | ↓ | | | | | | | | | 7.0 V | GND | | | ↓ | | | ↓ | | | | | | | ↓ | $CHX_6$ | ↓ | | ↓ | | ↓ | | |
| | | 571 | | | | | | | | | | GND | 7.0 V | | | | | | | | | | | | | | $CHX_5$ | | | | | | | |
| | | 572 | | | | | | | | | | 7.0 V | 7.0 V | | | | | | | | | | | | | | $CHX_4$ | | | | | | | |
| | | 573 | | | | | | | | | | GND | GND | | | 7.0 V | | | | | | | | | | | $CHX_3$ | | | | | | | |

See footnotes at end of table.

TABLE III. Group A inspection for device type 02 - Continued.

| Symbol | MIL-STD-883 method | Cases J, K, Z, Y, U | Terminal conditions 1/ | | | | | | | | | | | | | | | | | | | | | | | | Measured terminal | Test limits | | | | | | Units |
|---|---|---|---|---|---|---|---|---|---|---|---|---|---|---|---|---|---|---|---|---|---|---|---|---|---|---|---|---|---|---|---|---|---|---|
| | | | 1 | 2 | 3 | 4 | 5 | 6 | 7 | 8 | 9 | 10 | 11 | 12 | 13 | 14 | 15 | 16 | 17 | 18 | 19 | 20 | 21 | 22 | 23 | 24 | | Subgroup 1 $T_A$ = 25°C | | Subgroup 2 $T_A$ = 125°C | | Subgroup 3 $T_A$ = -55°C | | |
| | | Symbol | COX | $CHX_7$ | $CHX_6$ | $CHX_5$ | $CHX_4$ | $CHX_3$ | $CHX_2$ | $CHX_1$ | $CHX_0$ | A | B | $V_{SS}$ | INH | C | $CHY_7$ | $CHY_6$ | COY | $CHY_5$ | $CHY_4$ | $CHY_3$ | $CHY_2$ | $CHY_1$ | $CHY_0$ | $V_{DD}$ | | Min | Max | Min | Max | Min | Max | |
| | | Test No. | | | | | | | | | | | | | | | | | | | | | | | | | | | | | | | | |
| $V_{IH2}$ | 7/ | 574 | 10.0 V | | | | | | | | | 7.0 V | GND | GND | GND | 7.0 V | | | GND | | | | | | | 10.0 V | $CHX_2$ | 9.0 | | 9.0 | | 9.0 | | Vdc |
| | | 575 | | | | | | | | | | GND | 7.0 V | | | 7.0 V | | | GND | | | | | | | | $CHX_1$ | | | | | | | |
| | | 576 | | | | | | | | | | 7.0 V | 7.0 V | | | 7.0 V | | | GND | | | | | | | | $CHX_0$ | | | | | | | |
| | | 577 | GND | | | | | | | | | GND | GND | | | GND | | | 10.0 V | | | | | | | | $CHY_7$ | | | | | | | |
| | | 578 | | | | | | | | | | 7.0 V | GND | | | | | | | | | | | | | | $CHY_6$ | | | | | | | |
| | | 579 | | | | | | | | | | GND | 7.0 V | | | | | | | | | | | | | | $CHY_5$ | | | | | | | |
| | | 580 | | | | | | | | | | 7.0 V | 7.0 V | | | | | | | | | | | | | | $CHY_4$ | | | | | | | |
| | | 581 | | | | | | | | | | GND | GND | | | 7.0 V | | | | | | | | | | | $CHY_3$ | | | | | | | |
| | | 582 | | | | | | | | | | 7.0 V | GND | | | | | | | | | | | | | | $CHY_2$ | | | | | | | |
| | | 583 | | | | | | | | | | GND | 7.0 V | | | | | | | | | | | | | | $CHY_1$ | | | | | | | |
| | | 584 | | | | | | | | | | 7.0 V | 7.0 V | | | | | | | | | | | | | | $CHY_0$ | | | | | | | |
| $V_{IH3}$ | | 585 | 15.0 V | | | | | | | | | GND | GND | | | GND | | | GND | | | | | | | 15.0 V | $CHX_7$ | 13.5 | | 13.5 | | 13.5 | | |
| | | 586 | | | | | | | | | | 11.0 V | GND | | | | | | | | | | | | | | $CHX_6$ | | | | | | | |
| | | 587 | | | | | | | | | | GND | 11.0 V | | | | | | | | | | | | | | $CHX_5$ | | | | | | | |
| | | 588 | | | | | | | | | | 11.0 V | 11.0 V | | | | | | | | | | | | | | $CHX_4$ | | | | | | | |
| | | 589 | | | | | | | | | | GND | GND | | | 11.0 V | | | | | | | | | | | $CHX_3$ | | | | | | | |
| | | 590 | | | | | | | | | | 11.0 V | GND | | | | | | | | | | | | | | $CHX_2$ | | | | | | | |
| | | 591 | | | | | | | | | | GND | 11.0 V | | | | | | | | | | | | | | $CHX_1$ | | | | | | | |
| | | 592 | | | | | | | | | | 11.0 V | 11.0 V | | | | | | | | | | | | | | $CHX_0$ | | | | | | | |
| | | 593 | GND | | | | | | | | | GND | GND | | | GND | | | 15.0 V | | | | | | | | $CHY_7$ | | | | | | | |
| | | 594 | | | | | | | | | | 11.0 V | GND | | | | | | | | | | | | | | $CHY_6$ | | | | | | | |
| | | 595 | | | | | | | | | | GND | 11.0 V | | | | | | | | | | | | | | $CHY_5$ | | | | | | | |
| | | 596 | | | | | | | | | | 11.0 V | 11.0 V | | | | | | | | | | | | | | $CHY_4$ | | | | | | | |
| | | 597 | | | | | | | | | | GND | GND | | | 11.0 V | | | | | | | | | | | $CHY_3$ | | | | | | | |
| | | 598 | | | | | | | | | | 11.0 V | GND | | | | | | | | | | | | | | $CHY_2$ | | | | | | | |
| | | 599 | | | | | | | | | | GND | 11.0 V | | | | | | | | | | | | | | $CHY_1$ | | | | | | | |
| | | 600 | | | | | | | | | | 11.0 V | 11.0 V | | | | | | | | | | | | | | $CHY_0$ | | | | | | | |

See footnotes at end of table.

TABLE III. Group A inspection for device type 02 - Continued.

| Symbol | MIL-STD-883 method | Cases J, K,Z,Y,U | Terminal conditions 1/ | | | | | | | | | | | | | | | | | | | | | | | | Measured terminal | Test limits | | | | | | Units |
|---|---|---|---|---|---|---|---|---|---|---|---|---|---|---|---|---|---|---|---|---|---|---|---|---|---|---|---|---|---|---|---|---|---|---|
| | | | 1 | 2 | 3 | 4 | 5 | 6 | 7 | 8 | 9 | 10 | 11 | 12 | 13 | 14 | 15 | 16 | 17 | 18 | 19 | 20 | 21 | 22 | 23 | 24 | | Subgroup 1 $T_A$ = 25°C | | Subgroup 2 $T_A$ = 125°C | | Subgroup 3 $T_A$ = -55°C | | |
| | | Symbol | COX | $CHX_7$ | $CHX_6$ | $CHX_5$ | $CHX_4$ | $CHX_3$ | $CHX_2$ | $CHX_1$ | $CHX_0$ | A | B | $V_{SS}$ | INH | C | $CHY_7$ | $CHY_6$ | COY | $CHY_5$ | $CHY_4$ | $CHY_3$ | $CHY_2$ | $CHY_1$ | $CHY_0$ | $V_{DD}$ | | | | | | | | |
| | | Test No. | | | | | | | | | | | | | | | | | | | | | | | | | | Min | Max | Min | Max | Min | Max | |
| $V_{IL1}$ | 7/ | 601 | 5.0 V | | | | | | | | | GND | GND | GND | 5.0 V | GND | | | GND | | | | | | | 5.0 V | $CHX_7$ | | 0.5 | | 0.5 | | 0.5 | Vdc |
| | | 602 | | | | | | | | | | 1.5 V | GND | | | | | | | | | | | | | | $CHX_6$ | | | | | | | |
| | | 603 | | | | | | | | | | GND | 1.5 V | | | | | | | | | | | | | | $CHX_5$ | | | | | | | |
| | | 604 | | | | | | | | | | 1.5 V | 1.5 V | | | | | | | | | | | | | | $CHX_4$ | | | | | | | |
| | | 605 | | | | | | | | | | GND | GND | | | 1.5 V | | | | | | | | | | | $CHX_3$ | | | | | | | |
| | | 606 | | | | | | | | | | 1.5 V | GND | | | | | | | | | | | | | | $CHX_2$ | | | | | | | |
| | | 607 | | | | | | | | | | GND | 1.5 V | | | | | | | | | | | | | | $CHX_1$ | | | | | | | |
| | | 608 | | | | | | | | | | 1.5 V | 1.5 V | | | | | | | | | | | | | | $CHX_0$ | | | | | | | |
| | | 609 | GND | | | | | | | | | GND | GND | | | GND | | | 5.0 V | | | | | | | | $CHY_7$ | | | | | | | |
| | | 610 | | | | | | | | | | 1.5 V | GND | | | | | | | | | | | | | | $CHY_6$ | | | | | | | |
| | | 611 | | | | | | | | | | GND | 1.5 V | | | | | | | | | | | | | | $CHY_5$ | | | | | | | |
| | | 612 | | | | | | | | | | 1.5 V | 1.5 V | | | | | | | | | | | | | | $CHY_4$ | | | | | | | |
| | | 613 | | | | | | | | | | GND | GND | | | 1.5 V | | | | | | | | | | | $CHY_3$ | | | | | | | |
| | | 614 | | | | | | | | | | 1.5 V | GND | | | | | | | | | | | | | | $CHY_2$ | | | | | | | |
| | | 615 | | | | | | | | | | GND | 1.5 V | | | | | | | | | | | | | | $CHY_1$ | | | | | | | |
| | | 616 | | | | | | | | | | 1.5 V | 1.5 V | | | | | | | | | | | | | | $CHY_0$ | | | | | | | |
| $V_{IL2}$ | | 617 | 10.0 V | | | | | | | | | GND | GND | | 10.0 V | GND | | | GND | | | | | | | 10.0 V | $CHX_7$ | | 1.0 | | 1.0 | | 1.0 | |
| | | 618 | | | | | | | | | | 3.0 V | GND | | | | | | | | | | | | | | $CHX_6$ | | | | | | | |
| | | 619 | | | | | | | | | | GND | 3.0 V | | | | | | | | | | | | | | $CHX_5$ | | | | | | | |
| | | 620 | | | | | | | | | | 3.0 V | 3.0 V | | | | | | | | | | | | | | $CHX_4$ | | | | | | | |
| | | 621 | | | | | | | | | | GND | GND | | | 3.0 V | | | | | | | | | | | $CHX_3$ | | | | | | | |
| | | 622 | | | | | | | | | | 3.0 V | GND | | | | | | | | | | | | | | $CHX_2$ | | | | | | | |
| | | 623 | | | | | | | | | | GND | 3.0 V | | | | | | | | | | | | | | $CHX_1$ | | | | | | | |
| | | 624 | | | | | | | | | | 3.0 V | 3.0 V | | | | | | | | | | | | | | $CHX_0$ | | | | | | | |
| | | 625 | GND | | | | | | | | | GND | GND | | | GND | | | 10.0 V | | | | | | | | $CHY_7$ | | | | | | | |
| | | 626 | GND | | | | | | | | | 3.0 V | GND | | | GND | | | 10.0 V | | | | | | | | $CHY_6$ | | | | | | | |
| | | 627 | GND | | | | | | | | | GND | 3.0 V | | | GND | | | 10.0 V | | | | | | | | $CHY_5$ | | | | | | | |

See footnotes at end of table.

TABLE III. Group A inspection for device type 02 - Continued.

| Symbol | MIL-STD-883 method | Cases J, K,Z,Y,U | Terminal conditions 1/ | | | | | | | | | | | | | | | | | | | | | | | | Measured terminal | Test limits | | | | | | Units |
|---|---|---|---|---|---|---|---|---|---|---|---|---|---|---|---|---|---|---|---|---|---|---|---|---|---|---|---|---|---|---|---|---|---|---|
| | | | 1 | 2 | 3 | 4 | 5 | 6 | 7 | 8 | 9 | 10 | 11 | 12 | 13 | 14 | 15 | 16 | 17 | 18 | 19 | 20 | 21 | 22 | 23 | 24 | | Subgroup 1 $T_A$ = 25°C | | Subgroup 2 $T_A$ = 125°C | | Subgroup 3 $T_A$ = -55°C | | |
| | | Symbol | COX | $CHX_7$ | $CHX_6$ | $CHX_5$ | $CHX_4$ | $CHX_3$ | $CHX_2$ | $CHX_1$ | $CHX_0$ | A | B | $V_{SS}$ | INH | C | $CHY_7$ | $CHY_6$ | COY | $CHY_5$ | $CHY_4$ | $CHY_3$ | $CHY_2$ | $CHY_1$ | $CHY_0$ | $V_{DD}$ | | Min | Max | Min | Max | Min | Max | |
| | | Test No. | | | | | | | | | | | | | | | | | | | | | | | | | | | | | | | | |
| $V_{IL2}$ | 7/ | 628 | GND | | | | | | | | | 3.0 V | 3.0 V | GND | 10.0 V | GND | | | 10.0 V | | | | | | | 10.0 V | $CHY_4$ | | 1.0 | | 1.0 | | 1.0 | Vdc |
| | | 629 | | | | | | | | | | GND | GND | | | 3.0 V | | | | | | | | | | | $CHY_3$ | | | | | | | |
| | | 630 | | | | | | | | | | 3.0 V | GND | | | | | | | | | | | | | | $CHY_2$ | | | | | | | |
| | | 631 | | | | | | | | | | GND | 3.0 V | | | | | | | | | | | | | | $CHY_1$ | | | | | | | |
| | | 632 | | | | | | | | | | 3.0 V | 3.0 V | | | | | | | | | | | | | | $CHY_0$ | | | | | | | |
| $V_{IL3}$ | | 633 | 15.0 V | | | | | | | | | GND | GND | | 15.0 V | GND | | | GND | | | | | | | 15.0 V | $CHX_7$ | | 1.5 | | 1.5 | | 1.5 | |
| | | 634 | | | | | | | | | | 4.0 V | GND | | | | | | | | | | | | | | $CHX_6$ | | | | | | | |
| | | 635 | | | | | | | | | | GND | 4.0 V | | | | | | | | | | | | | | $CHX_5$ | | | | | | | |
| | | 636 | | | | | | | | | | 4.0 V | 4.0 V | | | | | | | | | | | | | | $CHX_4$ | | | | | | | |
| | | 637 | | | | | | | | | | GND | GND | | | 4.0 V | | | | | | | | | | | $CHX_3$ | | | | | | | |
| | | 638 | | | | | | | | | | 4.0 V | GND | | | | | | | | | | | | | | $CHX_2$ | | | | | | | |
| | | 639 | | | | | | | | | | GND | 4.0 V | | | | | | | | | | | | | | $CHX_1$ | | | | | | | |
| | | 640 | | | | | | | | | | 4.0 V | 4.0 V | | | | | | | | | | | | | | $CHX_0$ | | | | | | | |
| | | 641 | GND | | | | | | | | | GND | GND | | | GND | | | 15.0 V | | | | | | | | $CHY_7$ | | | | | | | |
| | | 642 | | | | | | | | | | 4.0 V | GND | | | | | | | | | | | | | | $CHY_6$ | | | | | | | |
| | | 643 | | | | | | | | | | GND | 4.0 V | | | | | | | | | | | | | | $CHY_5$ | | | | | | | |
| | | 644 | | | | | | | | | | 4.0 V | 4.0 V | | | | | | | | | | | | | | $CHY_4$ | | | | | | | |
| | | 645 | | | | | | | | | | GND | GND | | | 4.0 V | | | | | | | | | | | $CHY_3$ | | | | | | | |
| | | 646 | | | | | | | | | | 4.0 V | GND | | | | | | | | | | | | | | $CHY_2$ | | | | | | | |
| | | 647 | | | | | | | | | | GND | 4.0 V | | | | | | | | | | | | | | $CHY_1$ | | | | | | | |
| | | 648 | | | | | | | | | | 4.0 V | 4.0 V | | | | | | | | | | | | | | $CHY_0$ | | | | | | | |
| $I_{DOFF1}$ | Fig. 9 | 649 | 5.0 V | GND | GND | GND | GND | GND | GND | GND | GND | GND | GND | | 5.0 V | GND | | | | | | | | | | 5.0 V | COX | | ±100 | | ±100 | | ±100 | nA |
| | | 650 | | | | | | | | | | | | | | | GND | GND | 5.0 V | GND | GND | GND | GND | GND | GND | | COY | | | | | | | |
| | | 651 | 5.0 V | | | | | | | | GND | | | | | | | | | | | | | | | | $CHX_0$ | | | | | | | |
| | | 652 | | | | | | | | GND | | | | | | | | | | | | | | | | | $CHX_1$ | | | | | | | |
| | | 653 | | | | | | | GND | | | | | | | | | | | | | | | | | | $CHX_2$ | | | | | | | |
| | | 654 | | | | | | GND | | | | | | | | | | | | | | | | | | | $CHX_3$ | | | | | | | |

See footnotes at end of table.

TABLE III. Group A inspection for device type 02 - Continued.

| Symbol | MIL-STD-883 method | Cases J, K,Y,Z,U | Terminal conditions 1/ | | | | | | | | | | | | | | | | | | | | | | | | Measured terminal | Test limits | | | | | | Units |
|---|---|---|---|---|---|---|---|---|---|---|---|---|---|---|---|---|---|---|---|---|---|---|---|---|---|---|---|---|---|---|---|---|---|---|
| | | | 1 | 2 | 3 | 4 | 5 | 6 | 7 | 8 | 9 | 10 | 11 | 12 | 13 | 14 | 15 | 16 | 17 | 18 | 19 | 20 | 21 | 22 | 23 | 24 | | Subgroup 1 $T_A$ = 25°C | | Subgroup 2 $T_A$ = 125°C | | Subgroup 3 $T_A$ = -55°C | | |
| | | Symbol | COX | $CHX_7$ | $CHX_6$ | $CHX_5$ | $CHX_4$ | $CHX_3$ | $CHX_2$ | $CHX_1$ | $CHX_0$ | A | B | $V_{SS}$ | INH | C | $CHY_7$ | $CHY_6$ | COY | $CHY_5$ | $CHY_4$ | $CHY_3$ | $CHY_2$ | $CHY_1$ | $CHY_0$ | $V_{DD}$ | | Min | Max | Min | Max | Min | Max | |
| | | Test No. | | | | | | | | | | | | | | | | | | | | | | | | | | | | | | | | |
| $I_{DOFF1}$ | Fig. 9 | 655 | 5.0 V | | | | GND | | | | | GND | GND | GND | 5.0 V | GND | | | | | | | | | | 5.0 V | $CHX_4$ | | ±100 | | ±100 | | ±100 | nA |
| | | 656 | | | | GND | | | | | | | | | | | | | | | | | | | | | $CHX_5$ | | | | | | | |
| | | 657 | | | GND | | | | | | | | | | | | | | | | | | | | | | $CHX_6$ | | | | | | | |
| | | 658 | | GND | | | | | | | | | | | | | | | | | | | | | | | $CHX_7$ | | | | | | | |
| | | 659 | | | | | | | | | | | | | | | | | | | | | | | | | $CHY_0$ | | | | | | | |
| | | 660 | | | | | | | | | | | | | | | | | 5.0 V | | | | | | GND | | $CHY_1$ | | | | | | | |
| | | 661 | | | | | | | | | | | | | | | | | | | | | | GND | | | $CHY_2$ | | | | | | | |
| | | 662 | | | | | | | | | | | | | | | | | | | | | GND | | | | $CHY_3$ | | | | | | | |
| | | 663 | | | | | | | | | | | | | | | | | | | | GND | | | | | $CHY_4$ | | | | | | | |
| | | 664 | | | | | | | | | | | | | | | | | | | GND | | | | | | $CHY_5$ | | | | | | | |
| | | 665 | | | | | | | | | | | | | | | | GND | | | | | | | | | $CHY_6$ | | | | | | | |
| | | 666 | | | | | | | | | | | | | | | GND | | | | | | | | | | $CHY_7$ | | | | | | | |
| | | 667 | GND | 5.0 V | 5.0 V | 5.0 V | 5.0 V | 5.0 V | 5.0 V | 5.0 V | 5.0 V | | | | | | | | | | | | | | | | COX | | | | | | | |
| | | 668 | | | | | | | | | | | | | | | 5.0 V | 5.0 V | GND | 5.0 V | 5.0 V | 5.0 V | 5.0 V | 5.0 V | 5.0 V | | COY | | | | | | | |
| | | 669 | GND | | | | | | | | 5.0 V | | | | | | | | | | | | | | | | $CHX_0$ | | | | | | | |
| | | 670 | | | | | | | | 5.0 V | | | | | | | | | | | | | | | | | $CHX_1$ | | | | | | | |
| | | 671 | | | | | | | 5.0 V | | | | | | | | | | | | | | | | | | $CHX_2$ | | | | | | | |
| | | 672 | | | | | | 5.0 V | | | | | | | | | | | | | | | | | | | $CHX_3$ | | | | | | | |
| | | 673 | | | | | 5.0 V | | | | | | | | | | | | | | | | | | | | $CHX_4$ | | | | | | | |
| | | 674 | | | | 5.0 V | | | | | | | | | | | | | | | | | | | | | $CHX_5$ | | | | | | | |
| | | 675 | | | 5.0 V | | | | | | | | | | | | | | | | | | | | | | $CHX_6$ | | | | | | | |
| | | 676 | | 5.0 V | | | | | | | | | | | | | | | | | | | | | | | $CHX_7$ | | | | | | | |
| | | 677 | | | | | | | | | | | | | | | | | GND | | | | | | 5.0 V | | $CHY_0$ | | | | | | | |
| | | 678 | | | | | | | | | | | | | | | | | | | | | | 5.0 V | | | $CHY_1$ | | | | | | | |
| | | 679 | | | | | | | | | | | | | | | | | | | | | 5.0 V | | | | $CHY_2$ | | | | | | | |
| | | 680 | | | | | | | | | | | | | | | | | | | | 5.0 V | | | | | $CHY_3$ | | | | | | | |
| | | 681 | | | | | | | | | | | | | | | | | | | 5.0 V | | | | | | $CHY_4$ | | | | | | | |

See footnotes at end of table.

TABLE III. Group A inspection for device type 02 - Continued.

| Symbol | MIL-STD-883 method | Cases J, K,Z,Y,U | Terminal conditions 1/ | | | | | | | | | | | | | | | | | | | | | | | | Measured terminal | Test limits | | | | | | Units |
|---|---|---|---|---|---|---|---|---|---|---|---|---|---|---|---|---|---|---|---|---|---|---|---|---|---|---|---|---|---|---|---|---|---|---|
| | | | 1 | 2 | 3 | 4 | 5 | 6 | 7 | 8 | 9 | 10 | 11 | 12 | 13 | 14 | 15 | 16 | 17 | 18 | 19 | 20 | 21 | 22 | 23 | 24 | | Subgroup 1 $T_A$ = 25°C | | Subgroup 2 $T_A$ = 125°C | | Subgroup 3 $T_A$ = -55°C | | |
| | | Symbol | COX | $CHX_7$ | $CHX_6$ | $CHX_5$ | $CHX_4$ | $CHX_3$ | $CHX_2$ | $CHX_1$ | $CHX_0$ | A | B | $V_{SS}$ | INH | C | $CHY_7$ | $CHY_6$ | COY | $CHY_5$ | $CHY_4$ | $CHY_3$ | $CHY_2$ | $CHY_1$ | $CHY_0$ | $V_{DD}$ | | Min | Max | Min | Max | Min | Max | |
| | | Test No. | | | | | | | | | | | | | | | | | | | | | | | | | | | | | | | | |
| $I_{DOFF1}$ | Fig. 9 | 682 | | | | | | | | | | GND | GND | GND | 5.0 V | GND | | | GND | 5.0 V | | | | | | 5.0 V | $CHY_5$ | | ±100 | | ±100 | | ±100 | nA |
| $I_{DOFF1}$ | | 683 | | | | | | | | | | GND | GND | GND | 5.0 V | GND | | 5.0 V | GND | | | | | | | 5.0 V | $CHY_6$ | | ±100 | | ±100 | | ±100 | |
| $I_{DOFF1}$ | | 684 | | | | | | | | | | GND | GND | GND | 5.0 V | GND | 5.0 V | | GND | | | | | | | 5.0 V | $CHY_7$ | | ±100 | | ±100 | | ±100 | |
| $I_{DOFF2}$ | | 685-721 | Same tests and terminal conditions as for tests 667-684, except $V_{DD}$ = 10.0 V | | | | | | | | | | | | | | | | | | | | | | | | | | ±200 | | ±200 | | ±200 | |
| $I_{DOFF3}$ | | 722-758 | Same tests and terminal conditions as for tests 667-684, except $V_{DD}$ = 15.0 V | | | | | | | | | | | | | | | | | | | | | | | | | | ±200 | | ±500 | | ±500 | |
| | | | | | | | | | | | | | | | | | | | | | | | | | | | | Subgroup 4 $T_A$ = 25°C | | | | | | |
| | | | | | | | | | | | | | | | | | | | | | | | | | | | | Min | Max | | | | | |
| $C_C$ | 3012 | 759 | | | | | | | | | | 4/ | | GND | | | | | | | | | | | | GND | A | | 7.5 | | | | | pF |
| | | 760 | | | | | | | | | | | 4/ | | | | | | | | | | | | | | B | | | | | | | |
| | | 761 | | | | | | | | | | | | | | 4/ | | | | | | | | | | | C | | | | | | | |
| | | 762 | | | | | | | | | | | | | 4/ | | | | | | | | | | | | INH | | | | | | | |
| $C_{IS}$ | | 763 | | | | | | | | | 4/ | GND | GND | | GND | GND | | | | | | | | | | | $CHX_0$ | | | | | | | |
| | | 764 | | | | | | | | 4/ | | | | | | | | | | | | | | | | | $CHX_1$ | | | | | | | |
| | | 765 | | | | | | | 4/ | | | | | | | | | | | | | | | | | | $CHX_2$ | | | | | | | |
| | | 766 | | | | | | 4/ | | | | | | | | | | | | | | | | | | | $CHX_3$ | | | | | | | |
| | | 767 | | | | | 4/ | | | | | | | | | | | | | | | | | | | | $CHX_4$ | | | | | | | |
| | | 768 | | | | 4/ | | | | | | | | | | | | | | | | | | | | | $CHX_5$ | | | | | | | |
| | | 769 | | | 4/ | | | | | | | | | | | | | | | | | | | | | | $CHX_6$ | | | | | | | |
| | | 770 | | 4/ | | | | | | | | | | | | | | | | | | | | | | | $CHX_7$ | | | | | | | |
| | | 771 | | | | | | | | | | | | | | | | | | | | | | | 4/ | | $CHY_0$ | | | | | | | |
| | | 772 | | | | | | | | | | | | | | | | | | | | | 4/ | | | | $CHY_1$ | | | | | | | |
| | | 773 | | | | | | | | | | | | | | | | | | | | 4/ | | | | | $CHY_2$ | | | | | | | |
| | | 774 | | | | | | | | | | | | | | | | | | | 4/ | | | | | | $CHY_3$ | | | | | | | |
| | | 775 | | | | | | | | | | | | | | | | | | 4/ | | | | | | | $CHY_4$ | | | | | | | |
| | | 776 | | | | | | | | | | | | | | | | 4/ | | | | | | | | | $CHY_5$ | | | | | | | |
| | | 777 | | | | | | | | | | | | | | | 4/ | | | | | | | | | | $CHY_6$ | | | | | | | |
| | | 778 | | | | | | | | | | | | | | | | | | | | | | | | | $CHY_7$ | | | | | | | |

See footnotes at end of table.

TABLE III. Group A inspection for device type 02 - Continued.

| Symbol | MIL-STD-883 method | Cases J, K,Y,Z,U | Terminal conditions 1/ | | | | | | | | | | | | | | | | | | | | | | | | Measured terminal | Test limits | | | | | | Units |
|---|---|---|---|---|---|---|---|---|---|---|---|---|---|---|---|---|---|---|---|---|---|---|---|---|---|---|---|---|---|---|---|---|---|---|
| | | | 1 | 2 | 3 | 4 | 5 | 6 | 7 | 8 | 9 | 10 | 11 | 12 | 13 | 14 | 15 | 16 | 17 | 18 | 19 | 20 | 21 | 22 | 23 | 24 | | Subgroup 4 $T_A$ = 25°C | | | | | | |
| | | Symbol | COX | $CHX_7$ | $CHX_6$ | $CHX_5$ | $CHX_4$ | $CHX_3$ | $CHX_2$ | $CHX_1$ | $CHX_0$ | A | B | $V_{SS}$ | INH | C | $CHY_7$ | $CHY_6$ | COY | $CHY_5$ | $CHY_4$ | $CHY_3$ | $CHY_2$ | $CHY_1$ | $CHY_0$ | $V_{DD}$ | | | | | | | | |
| | | Test No. | | | | | | | | | | | | | | | | | | | | | | | | | | Min | Max | Min | Max | Min | Max | |
| $C_{OS}$ | 3012 | 779 | 5/ | | | | | | | | | GND | GND | GND | GND | GND | | | | | | | | | | GND | COX | | 50 | | | | | pF |
| $C_{OS}$ | | 780 | | | | | | | | | | | | | | | | | 5/ | | | | | | | | COY | | 50 | | | | | |
| $C_{IOS}$ | | 781 | 6/ | | | | | | | | 6/ | | | | | | | | | | | | | | | | $CHX_0$→COX | | 0.4 | | | | | |
| | | 782 | | | | | | | | 6/ | | | | | | | | | | | | | | | | | $CHX_1$→COX | | | | | | | |
| | | 783 | | | | | | | 6/ | | | | | | | | | | | | | | | | | | $CHX_2$→COX | | | | | | | |
| | | 784 | | | | | | 6/ | | | | | | | | | | | | | | | | | | | $CHX_3$→COX | | | | | | | |
| | | 785 | | | | | 6/ | | | | | | | | | | | | | | | | | | | | $CHX_4$→COX | | | | | | | |
| | | 786 | | | | 6/ | | | | | | | | | | | | | | | | | | | | | $CHX_5$→COX | | | | | | | |
| | | 787 | | | 6/ | | | | | | | | | | | | | | | | | | | | | | $CHX_6$→COX | | | | | | | |
| | | 788 | | 6/ | | | | | | | | | | | | | | | | | | | | | | | $CHY_7$→COX | | | | | | | |
| | | 789 | | | | | | | | | | | | | | | | | 6/ | | | | | | 6/ | | $CHY_0$→COY | | | | | | | |
| | | 790 | | | | | | | | | | | | | | | | | | | | | | 6/ | | | $CHY_1$→COY | | | | | | | |
| | | 791 | | | | | | | | | | | | | | | | | | | | | 6/ | | | | $CHY_2$→COY | | | | | | | |
| | | 792 | | | | | | | | | | | | | | | | | | | | 6/ | | | | | $CHY_3$→COY | | | | | | | |
| | | 793 | | | | | | | | | | | | | | | | | | | 6/ | | | | | | $CHY_4$→COY | | | | | | | |
| | | 794 | | | | | | | | | | | | | | | | | | 6/ | | | | | | | $CHY_5$→COY | | | | | | | |
| | | 795 | | | | | | | | | | | | | | | | 6/ | | | | | | | | | $CHY_6$→COY | | | | | | | |
| | | 796 | | | | | | | | | | | | | | | 6/ | | | | | | | | | | $CHY_7$→COY | | | | | | | |
| | | | | | | | | | | | | | | | | | | | | | | | | | | | | Subgroup 9 $T_A$ = 25°C | | Subgroup 10 $T_A$ = 125°C | | Subgroup 11 $T_A$ = -55°C | | |
| | | | | | | | | | | | | | | | | | | | | | | | | | | | | Min | Max | Min | Max | Min | Max | |
| $t_{PLH1}$ and $t_{PHL1}$ | 3003 Fig. 11 | 797 | IN | | | | | | | | OUT | GND | GND | GND | GND | GND | | | | | | | | | | 5.0 V | COX→$CHX_0$ | 3 | 55 | 4 | 77 | 3 | 55 | ns |
| | | 798 | | | | | | | | OUT | | 5.0 V | GND | | | | | | | | | | | | | | COX→$CHX_1$ | | | | | | | |
| | | 799 | | | | | | | DUT | | | GND | 5.0 V | | | | | | | | | | | | | | COX→$CHX_2$ | | | | | | | |
| | | 800 | | | | | | OUT | | | | 5.0 V | 5.0 V | | | | | | | | | | | | | | COX→$CHX_3$ | | | | | | | |
| | | 801 | | | | | OUT | | | | | GND | GND | | | 5.0 V | | | | | | | | | | | COX→$CHX_4$ | | | | | | | |
| | | 802 | | | | OUT | | | | | | 5.0 V | GND | | | 5.0 V | | | | | | | | | | | COX→$CHX_5$ | | | | | | | |

See footnotes at end of table.

TABLE III. Group A inspection for device type 02 - Continued.

| Symbol | MIL-STD-883 method | Cases J, K,Z,Y,U | Terminal conditions 1/ | | | | | | | | | | | | | | | | | | | | | | | | Measured terminal | Test limits | | | | | | Units |
|---|---|---|---|---|---|---|---|---|---|---|---|---|---|---|---|---|---|---|---|---|---|---|---|---|---|---|---|---|---|---|---|---|---|---|
| | | | 1 | 2 | 3 | 4 | 5 | 6 | 7 | 8 | 9 | 10 | 11 | 12 | 13 | 14 | 15 | 16 | 17 | 18 | 19 | 20 | 21 | 22 | 23 | 24 | | Subgroup 9 $T_A$ = 25°C | | Subgroup 10 $T_A$ = 125°C | | Subgroup 11 $T_A$ = -55°C | | |
| | | Symbol | COX | $CHX_7$ | $CHX_6$ | $CHX_5$ | $CHX_4$ | $CHX_3$ | $CHX_2$ | $CHX_1$ | $CHX_0$ | A | B | $V_{SS}$ | INH | C | $CHY_7$ | $CHY_6$ | COY | $CHY_5$ | $CHY_4$ | $CHY_3$ | $CHY_2$ | $CHY_1$ | $CHY_0$ | $V_{DD}$ | | Min | Max | Min | Max | Min | Max | |
| | | Test No. | | | | | | | | | | | | | | | | | | | | | | | | | | | | | | | | |
| $t_{PLH1}$ and $t_{PHL1}$ | 3003 Fig. 11 | 803 | IN | | OUT | | | | | | | GND | 5.0 V | GND | GND | 5.0 V | | | | | | | | | | 5.0 V | COX→$CHX_6$ | 3 | 55 | 4 | 77 | 3 | 55 | ns |
| | | 804 | IN | OUT | | | | | | | | 5.0 V | 5.0 V | | | 5.0 V | | | | | | | | | OUT | | COX→$CHX_7$ | | | | | | | |
| | | 805 | | | | | | | | | | GND | GND | | | GND | | | IN | | | | | OUT | | | COY→$CHY_0$ | | | | | | | |
| | | 806 | | | | | | | | | | 5.0 V | GND | | | | | | | | | | OUT | | | | COY→$CHY_1$ | | | | | | | |
| | | 807 | | | | | | | | | | GND | 5.0 V | | | | | | | | | OUT | | | | | COY→$CHY_2$ | | | | | | | |
| | | 808 | | | | | | | | | | 5.0 V | 5.0 V | | | | | | | | OUT | | | | | | COY→$CHY_3$ | | | | | | | |
| | | 809 | | | | | | | | | | GND | GND | | | 5.0 V | | | | OUT | | | | | | | COY→$CHY_4$ | | | | | | | |
| | | 810 | | | | | | | | | | 5.0 V | GND | | | | | | | | | | | | | | COY→$CHY_5$ | | | | | | | |
| | | 811 | | | | | | | | | | GND | 5.0 V | | | | | OUT | | | | | | | | | COY→$CHY_6$ | | | | | | | |
| | | 812 | | | | | | | | | | 5.0 V | 5.0 V | | | | OUT | | | | | | | | | | COY→$CHY_7$ | | | | | | | |
| $t_{PLH2}$ | 3003 Fig. 13 | 813 | 5.0 V | | | | | | | | OUT | IN | GND | | | GND | | | | | | | | | | | A→$CHX_0$ | 30 | 600 | 41 | 830 | 30 | 600 | |
| | | 814 | | | | | | | | OUT | | IN | GND | | | | | | | | | | | | | | A→$CHX_1$ | | | | | | | |
| | | 815 | | | | | | | OUT | | | GND | IN | | | | | | | | | | | | | | B→$CHX_2$ | | | | | | | |
| | | 816 | | | | | | OUT | | | | IN | IN | | | | | | | | | | | | | | B→$CHX_3$ | | | | | | | |
| | | 817 | | | | | OUT | | | | | GND | GND | | | IN | | | | | | | | | | | C→$CHX_4$ | | | | | | | |
| | | 818 | | | | OUT | | | | | | IN | GND | | | | | | | | | | | | | | A→$CHX_5$ | | | | | | | |
| | | 819 | | | OUT | | | | | | | GND | IN | | | | | | | | | | | | | | B→$CHX_6$ | | | | | | | |
| | | 820 | | OUT | | | | | | | | IN | IN | | | | | | | | | | | | | | C→$CHX_7$ | | | | | | | |
| | | 821 | | | | | | | | | | IN | GND | | | GND | | | 5.0 V | | | | | | OUT | | A→$CHY_0$ | | | | | | | |
| | | 822 | | | | | | | | | | IN | GND | | | | | | | | | | | OUT | | | A→$CHY_1$ | | | | | | | |
| | | 823 | | | | | | | | | | GND | IN | | | | | | | | | | OUT | | | | B→$CHY_2$ | | | | | | | |
| | | 824 | | | | | | | | | | IN | IN | | | | | | | | | OUT | | | | | B→$CHY_3$ | | | | | | | |
| | | 825 | | | | | | | | | | GND | GND | | | IN | | | | | OUT | | | | | | C→$CHY_4$ | | | | | | | |
| | | 826 | | | | | | | | | | IN | GND | | | | | | | OUT | | | | | | | A→$CHY_5$ | | | | | | | |
| | | 827 | | | | | | | | | | GND | IN | | | | | OUT | | | | | | | | | B→$CHY_6$ | | | | | | | |
| | | 828 | | | | | | | | | | IN | IN | | | | OUT | | | | | | | | | | C→$CHY_7$ | | | | | | | |
| $t_{PHL2}$ | 3003 Fig. 13 | 829-844 | Same tests and terminal conditions as for tests 814-829, except limits are as shown. | | | | | | | | | | | | | | | | | | | | | | | | | 20 | 400 | 28 | 560 | 20 | 400 | |

See footnotes at end of table.

TABLE III. Group A inspection for device type 02 - Continued.

| Symbol | MIL-STD-883 method | Cases J, K,Z,Y,U | Terminal conditions 1/ | | | | | | | | | | | | | | | | | | | | | | | Measured terminal | Test limits | | | | | | Units |
|---|---|---|---|---|---|---|---|---|---|---|---|---|---|---|---|---|---|---|---|---|---|---|---|---|---|---|---|---|---|---|---|---|---|
| | | | 1 | 2 | 3 | 4 | 5 | 6 | 7 | 8 | 9 | 10 | 11 | 12 | 13 | 14 | 15 | 16 | 17 | 18 | 19 | 20 | 21 | 22 | 23 | 24 | | Subgroup 9 $T_A$ = 25°C | | Subgroup 10 $T_A$ = 125°C | | Subgroup 11 $T_A$ = -55°C | | |
| | | Symbol | COX | $CHX_7$ | $CHX_6$ | $CHX_5$ | $CHX_4$ | $CHX_3$ | $CHX_2$ | $CHX_1$ | $CHX_0$ | A | B | $V_{SS}$ | INH | C | $CHY_7$ | $CHY_6$ | COY | $CHY_5$ | $CHY_4$ | $CHY_3$ | $CHY_2$ | $CHY_1$ | $CHY_0$ | $V_{DD}$ | | Min | Max | Min | Max | Min | Max | |
| | | Test No. | | | | | | | | | | | | | | | | | | | | | | | | | | | | | | | |
| $t_{PLH3}$ | 3003 Fig. 15 | 845 | 5.0 V | | | | | | | | OUT | GND | GND | GND | IN | GND | | | | | | | | | | 5.0 V | INH→$CHX_0$ | 30 | 600 | 41 | 830 | 30 | 600 | ns |
| | | 846 | | | | | | | | OUT | | 5.0 V | GND | | | | | | | | | | | | | | INH→$CHX_1$ | | | | | | | |
| | | 847 | | | | | | | OUT | | | GND | 5.0 V | | | | | | | | | | | | | | INH→$CHX_2$ | | | | | | | |
| | | 848 | | | | | | OUT | | | | 5.0 V | 5.0 V | | | | | | | | | | | | | | INH→$CHX_3$ | | | | | | | |
| | | 849 | | | | | OUT | | | | | GND | GND | | | 5.0 V | | | | | | | | | | | INH→$CHX_4$ | | | | | | | |
| | | 850 | | | | OUT | | | | | | 5.0 V | GND | | | | | | | | | | | | | | INH→$CHX_5$ | | | | | | | |
| | | 851 | | | OUT | | | | | | | GND | 5.0 V | | | | | | | | | | | | | | INH→$CHX_6$ | | | | | | | |
| | | 852 | | OUT | | | | | | | | 5.0 V | 5.0 V | | | | | | | | | | | | | | INH→$CHX_7$ | | | | | | | |
| | | 853 | | | | | | | | | | GND | GND | | | GND | | | 5.0 V | | | | | | OUT | | INH→$CHY_0$ | | | | | | | |
| | | 854 | | | | | | | | | | 5.0 V | GND | | | | | | | | | | | OUT | | | INH→$CHY_1$ | | | | | | | |
| | | 855 | | | | | | | | | | GND | 5.0 V | | | | | | | | | | OUT | | | | INH→$CHY_2$ | | | | | | | |
| | | 856 | | | | | | | | | | 5.0 V | 5.0 V | | | | | | | | | OUT | | | | | INH→$CHY_3$ | | | | | | | |
| | | 857 | | | | | | | | | | GND | GND | | | 5.0 V | | | | | OUT | | | | | | INH→$CHY_4$ | | | | | | | |
| | | 858 | | | | | | | | | | 5.0 V | GND | | | | | | | OUT | | | | | | | INH→$CHY_5$ | | | | | | | |
| | | 859 | | | | | | | | | | GND | 5.0 V | | | | | OUT | | | | | | | | | INH→$CHY_6$ | | | | | | | |
| | | 860 | | | | | | | | | | 5.0 V | 5.0 V | | | | OUT | | | | | | | | | | INH→$CHY_7$ | | | | | | | |
| $t_{PHL3}$ | | 861-876 | Same tests and terminal conditions as for tests 846-861, except limits are as shown. | | | | | | | | | | | | | | | | | | | | | | | | | 20 | 400 | 28 | 560 | 20 | 400 | |
| | | | | | | | | | | | | | | | | | | | | | | | | | | | | Subgroup 12 $T_A$ = 25°C | | | | | | |
| | | | | | | | | | | | | | | | | | | | | | | | | | | | | Min | Max | | | | | |
| $t_{PLH1}$ $t_{PHL1}$ | 3003 Fig. 11 | 877-892 | Same tests and terminal conditions as for tests 797-812, except $V_{DD}$ = 10.0 V and limits are as shown. | | | | | | | | | | | | | | | | | | | | | | | | | 1 1 | 25 25 | | | | | ns |
| $t_{PLH2}$ $t_{PHL2}$ | 3003 Fig. 13 | 893-924 | Same tests and terminal conditions as for tests 813-844, except COX and COY = 10.0 V (where applicable) and $V_{DD}$ = 10.0 V and limits are as shown. | | | | | | | | | | | | | | | | | | | | | | | | | 13 8 | 250 150 | | | | | |
| $t_{PLH3}$ $t_{PHL3}$ | 3003 Fig. 15 | 925-956 | Same tests and terminal conditions as for tests 845-876, except COX and COY = 10.0 V (where applicable) and $V_{DD}$ = 10.0 V and limits are as shown. | | | | | | | | | | | | | | | | | | | | | | | | | 13 8 | 250 150 | | | | | |

See footnotes at end of table.

TABLE III. Group A inspection for device type 03.

| Symbol | MIL-STD-883 method | Cases E,F,X | Terminal conditions 1/ | | | | | | | | | | | | | | | | Measured terminal | Test limits | | | | | | Units |
|---|---|---|---|---|---|---|---|---|---|---|---|---|---|---|---|---|---|---|---|---|---|---|---|---|---|---|
| | | | 1 | 2 | 3 | 4 | 5 | 6 | 7 | 8 | 9 | 10 | 11 | 12 | 13 | 14 | 15 | 16 | | Subgroup 1 $T_A$ = 25°C | | Subgroup 2 $T_A$ = 125°C | | Subgroup 3 $T_A$ = -55°C | | |
| | | Symbol | $IN_S$ | $A_1$ | $B_1$ | $D_1$ | $A_2$ | $B_2$ | $D_2$ | $V_{SS}$ | $D_3$ | $B_3$ | $A_3$ | $D_4$ | $B_4$ | $A_4$ | $O_D$ | $V_{DD}$ | | Min | Max | Min | Max | Min | Max | |
| | | Test No. | | | | | | | | | | | | | | | | | | | | | | | | |
| $V_{IC(pos)}$ | | 1 | 1 mA | | | | | | | | | | | | | | | GND | $IN_S$ | | 1.5 | | | | | Vdc |
| | | 2 | | 1 mA | | | | | | | | | | | | | | | $A_1$ | | | | | | | |
| | | 3 | | | 1 mA | | | | | | | | | | | | | | $B_1$ | | | | | | | |
| | | 4 | | | | | 1 mA | | | | | | | | | | | | $A_2$ | | | | | | | |
| | | 5 | | | | | | 1 mA | | | | | | | | | | | $B_2$ | | | | | | | |
| | | 6 | | | | | | | | | | 1 mA | | | | | | | $B_3$ | | | | | | | |
| | | 7 | | | | | | | | | | | 1 mA | | | | | | $A_3$ | | | | | | | |
| | | 8 | | | | | | | | | | | | | 1 mA | | | | $B_4$ | | | | | | | |
| | | 9 | | | | | | | | | | | | | | 1 mA | | | $A_4$ | | | | | | | |
| | | 10 | | | | | | | | | | | | | | | 1 mA | | $O_D$ | | | | | | | |
| $V_{IC(neg)}$ | | 11 | -1 mA | | | | | | | GND | | | | | | | | | $IN_S$ | | -6.0 | | | | | |
| | | 12 | | -1 mA | | | | | | | | | | | | | | | $A_1$ | | | | | | | |
| | | 13 | | | -1 mA | | | | | | | | | | | | | | $B_1$ | | | | | | | |
| | | 14 | | | | | -1 mA | | | | | | | | | | | | $A_2$ | | | | | | | |
| | | 15 | | | | | | -1 mA | | | | | | | | | | | $B_2$ | | | | | | | |
| | | 16 | | | | | | | | | | -1 mA | | | | | | | $B_3$ | | | | | | | |
| | | 17 | | | | | | | | | | | -1 mA | | | | | | $A_3$ | | | | | | | |
| | | 18 | | | | | | | | | | | | | -1 mA | | | | $B_4$ | | | | | | | |
| | | 19 | | | | | | | | | | | | | | -1 mA | | | $A_4$ | | | | | | | |
| | | 20 | | | | | | | | | | | | | | | -1 mA | | $O_D$ | | | | | | | |
| $I_{SS}$ 2/ | 3005 | 21 | 18.0 V | 18.0 V | 18.0 V | | 18.0 V | 18.0 V | | | | 18.0 V | 18.0 V | | 18.0 V | 18.0 V | GND | 18.0 V | $V_{SS}$ | | -0.25 | | -2.5 | | | µA |
| | | 22 | 18.0 V | GND | GND | | GND | GND | | | | GND | GND | | GND | GND | | | | | | | | | | |
| | | 23 | GND | 18.0 V | 18.0 V | | 18.0 V | 18.0 V | | | | 18.0 V | 18.0 V | | 18.0 V | 18.0 V | | | | | | | | | | |
| | | 24 | GND | GND | GND | | GND | GND | | | | GND | GND | | GND | GND | | | | | | | | | | |

See footnotes at end of table.

TABLE III. Group A inspection for device type 03 - Continued.

| Symbol | MIL-STD-883 method | Cases E,F,X | Terminal conditions 1/ | | | | | | | | | | | | | | | | Measured terminal | Test limits | | | | | | Units |
|---|---|---|---|---|---|---|---|---|---|---|---|---|---|---|---|---|---|---|---|---|---|---|---|---|---|---|
| | | | 1 | 2 | 3 | 4 | 5 | 6 | 7 | 8 | 9 | 10 | 11 | 12 | 13 | 14 | 15 | 16 | | Subgroup 1 $T_A$ = 25°C | | Subgroup 2 $T_A$ = 125°C | | Subgroup 3 $T_A$ = -55°C | | |
| | | Symbol | $IN_S$ | $A_1$ | $B_1$ | $D_1$ | $A_2$ | $B_2$ | $D_2$ | $V_{SS}$ | $D_3$ | $B_3$ | $A_3$ | $D_4$ | $B_4$ | $A_4$ | $O_D$ | $V_{DD}$ | | | | | | | | |
| | | Test No. | | | | | | | | | | | | | | | | | | Min | Max | Min | Max | Min | Max | |
| $V_{OH1}$ | 3006 | 25 | 15.0 V | 15.0 V | 15.0 V | | GND | GND | | GND | | GND | GND | | GND | GND | GND | 15.0 V | $D_1$ | 14.95 | | 14.95 | | 14.95 | | Vdc |
| | | 26 | | GND | GND | | 15.0 V | 15.0 V | | | | GND | GND | | GND | GND | | | $D_2$ | | | | | | | |
| | | 27 | | GND | GND | | GND | GND | | | | 15.0 V | 15.0 V | | GND | GND | | | $D_3$ | | | | | | | |
| | | 28 | | GND | GND | | GND | GND | | | | GND | GND | | 15.0 V | 15.0 V | | | $D_4$ | | | | | | | |
| | | 29 | GND | 15.0 V | 15.0 V | | GND | GND | | | | GND | GND | | GND | GND | | | $D_1$ | | | | | | | |
| | | 30 | | GND | GND | | 15.0 V | 15.0 V | | | | GND | GND | | GND | GND | | | $D_2$ | | | | | | | |
| | | 31 | | | | | GND | GND | | | | 15.0 V | 15.0 V | | GND | GND | | | $D_3$ | | | | | | | |
| | | 32 | | | | | | | | | | GND | GND | | 15.0 V | 15.0 V | | | $D_4$ | | | | | | | |
| $V_{OL1}$ | 3007 | 33 | 15.0 V | | | | | | | | | | | | GND | GND | 15.0 V | | $D_1$ | | 0.05 | | 0.05 | | 0.05 | |
| | | 34 | | | | | | | | | | | | | | | | | $D_2$ | | | | | | | |
| | | 35 | | | | | | | | | | | | | | | | | $D_3$ | | | | | | | |
| | | 36 | | | | | | | | | | | | | | | | | $D_4$ | | | | | | | |
| | | 37 | GND | | | | | | | | | | | | | | | | $D_1$ | | | | | | | |
| | | 38 | | | | | | | | | | | | | | | | | $D_2$ | | | | | | | |
| | | 39 | | | | | | | | | | | | | | | | | $D_3$ | | | | | | | |
| | | 40 | | | | | | | | | | | | | | | | | $D_4$ | | | | | | | |
| $V_{IH1}$ | | 41 | 1.5 V | 3.5 V | 1.5 V | | | | | | | | | | | | GND | 5.0 V | $D_1$ | 4.5 | | 4.5 | | 4.5 | | |
| | | 42 | | GND | GND | | 3.5 V | 1.5 V | | | | | | | | | | | $D_2$ | | | | | | | |
| | | 43 | | GND | GND | | GND | GND | | | | 1.5 V | 3.5 V | | | | | | $D_3$ | | | | | | | |
| | | 44 | | GND | GND | | GND | GND | | | | GND | GND | | 1.5 V | 3.5 V | | | $D_4$ | | | | | | | |
| | | 45 | 5.0 V | 1.5 V | 3.5 V | | GND | GND | | | | GND | GND | | GND | GND | | | $D_1$ | | | | | | | |
| | | 46 | | GND | GND | | 1.5 V | 3.5 V | | | | GND | GND | | GND | GND | | | $D_2$ | | | | | | | |
| | | 47 | | GND | GND | | GND | GND | | | | 3.5 V | 1.5 V | | GND | GND | | | $D_3$ | | | | | | | |
| | | 48 | | GND | GND | | GND | GND | | | | GND | GND | | 3.5 V | 1.5 V | | | $D_4$ | | | | | | | |
| $V_{IH2}$ | | 49 | 3.0 V | 7.0 V | 3.0 V | | GND | GND | | | | GND | GND | | GND | GND | | 10.0 V | $D_1$ | 9.0 | | 9.0 | | 9.0 | | |
| $V_{IH2}$ | | 50 | 3.0 V | GND | GND | | 7.0 V | 3.0 V | | | | GND | GND | | GND | GND | | 10.0 V | $D_2$ | 9.0 | | 9.0 | | 9.0 | | |
| $V_{IH2}$ | | 51 | 3.0 V | GND | GND | | GND | GND | | | | 3.0 V | 7.0 V | | GND | GND | | 10.0 V | $D_3$ | 9.0 | | 9.0 | | 9.0 | | |

See footnotes at end of table.

TABLE III. Group A inspection for device type 03 - Continued.

| Symbol | MIL-STD-883 method | Cases E,F,X | Terminal conditions 1/ | | | | | | | | | | | | | | | | Measured terminal | Test limits | | | | | | Units |
|---|---|---|---|---|---|---|---|---|---|---|---|---|---|---|---|---|---|---|---|---|---|---|---|---|---|---|
| | | | 1 | 2 | 3 | 4 | 5 | 6 | 7 | 8 | 9 | 10 | 11 | 12 | 13 | 14 | 15 | 16 | | Subgroup 1 $T_A$ = 25°C | | Subgroup 2 $T_A$ = 125°C | | Subgroup 3 $T_A$ = -55°C | | |
| | | Symbol | $IN_S$ | $A_1$ | $B_1$ | $D_1$ | $A_2$ | $B_2$ | $D_2$ | $V_{SS}$ | $D_3$ | $B_3$ | $A_3$ | $D_4$ | $B_4$ | $A_4$ | $O_D$ | $V_{DD}$ | | Min | Max | Min | Max | Min | Max | |
| | | Test No. | | | | | | | | | | | | | | | | | | | | | | | | |
| $V_{IH2}$ | | 52 | 3.0 V | GND | GND | | GND | GND | | GND | | GND | GND | | 3.0 V | 7.0 V | GND | 10.0 V | $D_4$ | 9.0 | | 9.0 | | 9.0 | | Vdc |
| | | 53 | 10.0 V | 3.0 V | 7.0 V | | GND | GND | | | | GND | GND | | GND | GND | | | $D_1$ | | | | | | | |
| | | 54 | | GND | GND | | 1.5 V | 7.0 V | | | | GND | GND | | GND | GND | | | $D_2$ | | | | | | | |
| | | 55 | | GND | GND | | GND | GND | | | | 7.0 V | 3.0 V | | GND | GND | | | $D_3$ | | | | | | | |
| | | 56 | | GND | GND | | GND | GND | | | | GND | GND | | 7.0 V | 3.0 V | | | $D_4$ | | | | | | | |
| $V_{IH3}$ | | 57 | 4.0 V | 11.0 V | 4.0 V | | GND | GND | | | | GND | GND | | GND | GND | | 15.0 V | $D_1$ | 13.5 | | 13.5 | | 13.5 | | |
| | | 58 | | GND | GND | | 11.0 V | 4.0 V | | | | GND | GND | | GND | GND | | | $D_2$ | | | | | | | |
| | | 59 | | GND | GND | | GND | GND | | | | 4.0 V | 11.0 V | | GND | GND | | | $D_3$ | | | | | | | |
| | | 60 | | GND | GND | | GND | GND | | | | GND | GND | | 4.0 V | 11.0 V | | | $D_4$ | | | | | | | |
| | | 61 | 15.0 V | 4.0 V | 11.0 V | | GND | GND | | | | GND | GND | | GND | GND | | | $D_1$ | | | | | | | |
| | | 62 | | GND | GND | | 4.0 V | 11.0 V | | | | GND | GND | | GND | GND | | | $D_2$ | | | | | | | |
| | | 63 | | GND | GND | | GND | GND | | | | 11.0 V | 4.0 V | | GND | GND | | | $D_3$ | | | | | | | |
| | | 64 | | GND | GND | | GND | GND | | | | GND | GND | | 11.0 V | 4.0 V | | | $D_4$ | | | | | | | |
| $V_{IL1}$ | | 65 | 1.5 V | 1.5 V | 1.5 V | | GND | GND | | | | GND | GND | | GND | GND | 5.0 V | 5.0 V | $D_1$ | | 0.5 | | 0.5 | | 0.5 | |
| | | 66 | | GND | GND | | 1.5 V | 1.5 V | | | | GND | GND | | GND | GND | | | $D_2$ | | | | | | | |
| | | 67 | | GND | GND | | GND | GND | | | | 1.5 V | 1.5 V | | GND | GND | | | $D_3$ | | | | | | | |
| | | 68 | | GND | GND | | GND | GND | | | | GND | GND | | 1.5 V | 1.5 V | | | $D_4$ | | | | | | | |
| | | 69 | 5.0 V | 1.5 V | 1.5 V | | GND | GND | | | | GND | GND | | GND | GND | | | $D_1$ | | | | | | | |
| | | 70 | | GND | GND | | 1.5 V | 1.5 V | | | | GND | GND | | GND | GND | | | $D_2$ | | | | | | | |
| | | 71 | | GND | GND | | GND | GND | | | | 1.5 V | 1.5 V | | GND | GND | | | $D_3$ | | | | | | | |
| | | 72 | | GND | GND | | GND | GND | | | | GND | GND | | 1.5 V | 1.5 V | | | $D_4$ | | | | | | | |
| $V_{IL2}$ | | 73 | 3.0 V | 3.0 V | 3.0 V | | GND | GND | | | | GND | GND | | GND | GND | 10.0 V | 10.0 V | $D_1$ | | 1.0 | | 1.0 | | 1.0 | |
| | | 74 | | GND | GND | | 3.0 V | 3.0 V | | | | GND | GND | | GND | GND | | | $D_2$ | | | | | | | |
| | | 75 | | GND | GND | | GND | GND | | | | 3.0 V | 3.0 V | | GND | GND | | | $D_3$ | | | | | | | |
| | | 76 | | GND | GND | | GND | GND | | | | GND | GND | | 3.0 V | 3.0 V | | | $D_4$ | | | | | | | |
| | | 77 | 10.0 V | 3.0 V | 3.0 V | | GND | GND | | | | GND | GND | | GND | GND | | | $D_1$ | | | | | | | |
| | | 78 | | GND | GND | | 3.0 V | 3.0 V | | | | GND | GND | | GND | GND | | | $D_2$ | | | | | | | |
| | | 79 | | GND | GND | | GND | GND | | | | 3.0 V | 3.0 V | | GND | GND | | | $D_3$ | | | | | | | |
| | | 80 | | GND | GND | | GND | GND | | | | GND | GND | | 3.0 V | 3.0 V | | | $D_4$ | | | | | | | |

See footnotes at end of table.

TABLE III. Group A inspection for device type 03 - Continued.

| Symbol | MIL-STD-883 method | Cases E,F,X | Terminal conditions 1/ | | | | | | | | | | | | | | | | Measured terminal | Test limits | | | | | | Units |
|---|---|---|---|---|---|---|---|---|---|---|---|---|---|---|---|---|---|---|---|---|---|---|---|---|---|---|
| | | | 1 | 2 | 3 | 4 | 5 | 6 | 7 | 8 | 9 | 10 | 11 | 12 | 13 | 14 | 15 | 16 | | Subgroup 1 $T_A$ = 25°C | | Subgroup 2 $T_A$ = 125°C | | Subgroup 3 $T_A$ = -55°C | | |
| | | Symbol | $IN_S$ | $A_1$ | $B_1$ | $D_1$ | $A_2$ | $B_2$ | $D_2$ | $V_{SS}$ | $D_3$ | $B_3$ | $A_3$ | $D_4$ | $B_4$ | $A_4$ | $O_D$ | $V_{DD}$ | | | | | | | | |
| | | Test No. | | | | | | | | | | | | | | | | | | Min | Max | Min | Max | Min | Max | |
| $V_{IL3}$ | | 81 | 4.0 V | 4.0 V | 4.0 V | | GND | GND | | GND | | GND | GND | | GND | GND | 15.0 V | 15.0 V | $D_1$ | | 1.5 | | 1.5 | | 1.5 | Vdc |
| | | 82 | | GND | GND | | 4.0 V | 4.0 V | | | | GND | GND | | GND | GND | | | $D_2$ | | | | | | | |
| | | 83 | | GND | GND | | GND | GND | | | | 4.0 V | 4.0 V | | GND | GND | | | $D_3$ | | | | | | | |
| | | 84 | | GND | GND | | GND | GND | | | | GND | GND | | 4.0 V | 4.0 V | | | $D_4$ | | | | | | | |
| | | 85 | 15.0 V | 4.0 V | 4.0 V | | GND | GND | | | | GND | GND | | GND | GND | | | $D_1$ | | | | | | | |
| | | 86 | | GND | GND | | 4.0 V | 4.0 V | | | | GND | GND | | GND | GND | | | $D_2$ | | | | | | | |
| | | 87 | | GND | GND | | GND | GND | | | | 4.0 V | 4.0 V | | GND | GND | | | $D_3$ | | | | | | | |
| | | 88 | | GND | GND | | GND | GND | | | | GND | GND | | 4.0 V | 4.0 V | | | $D_4$ | | | | | | | |
| $I_{IH1}$ 3/ | 3010 | 89 | 18.0 V | 18.0 V | 18.0 V | | 18.0 V | 18.0 V | | | | 18.0 V | 18.0 V | | 18.0 V | 18.0 V | 18.0 V | 18.0 V | All inputs | | 10 | | | | | nA |
| $I_{IH2}$ 3/ | | 90 | 18.0 V | GND | GND | | GND | GND | | | | GND | GND | | GND | GND | GND | | $IN_S$ | | 1.0 | | 45 | | | |
| | | 91 | GND | 18.0 V | GND | | GND | | | | | | | | | | | | $A_1$ | | | | | | | |
| | | 92 | | GND | 18.0 V | | GND | | | | | | | | | | | | $B_1$ | | | | | | | |
| | | 93 | | | GND | | 18.0 V | | | | | | | | | | | | $A_2$ | | | | | | | |
| | | 94 | | | | | GND | 18.0 V | | | | | | | | | | | $B_2$ | | | | | | | |
| | | 95 | | | | | | GND | | | | 18.0 V | | | | | | | $B_3$ | | | | | | | |
| | | 96 | | | | | | | | | | GND | 18.0 V | | | | | | $A_3$ | | | | | | | |
| | | 97 | | | | | | | | | | | GND | | 18.0 V | | | | $B_4$ | | | | | | | |
| | | 98 | | | | | | | | | | | | | GND | 18.0 V | | | $A_4$ | | | | | | | |
| | | 99 | | | | | | | | | | | | | GND | GND | 18.0 V | | $O_D$ | | | | | | | |
| $I_{IL1}$ 3/ | 3009 | 100 | | | | | | | | | | | | | GND | GND | GND | | All inputs | | -10 | | | | | |
| $I_{IL2}$ 3/ | | 101 | | 18.0 V | 18.0 V | | 18.0 V | 18.0 V | | | | 18.0 V | 18.0 V | | 18.0 V | 18.0 V | | | $IN_S$ | | -1.0 | | -45 | | | |
| | | 102 | 18.0 V | GND | 18.0 V | | 18.0 V | | | | | | | | | | | | $A_1$ | | | | | | | |
| | | 103 | | 18.0 V | GND | | 18.0 V | | | | | | | | | | | | $B_1$ | | | | | | | |
| | | 104 | | | 18.0 V | | GND | | | | | | | | | | | | $A_2$ | | | | | | | |
| | | 105 | | | | | 18.0 V | GND | | | | | | | | | | | $B_2$ | | | | | | | |
| | | 106 | | | | | 18.0 V | 18.0 V | | | | GND | | | | | | | $B_3$ | | | | | | | |
| | | 107 | | | | | 18.0 V | 18.0 V | | | | 18.0 V | GND | | | | | | $A_3$ | | | | | | | |

See footnotes at end of table.

TABLE III. Group A inspection for device type 03 - Continued.

| Symbol | MIL-STD-883 method | Cases E,F,X | Terminal conditions 1/ | | | | | | | | | | | | | | | | Measured terminal | Test limits | | | | | | Units |
|---|---|---|---|---|---|---|---|---|---|---|---|---|---|---|---|---|---|---|---|---|---|---|---|---|---|---|
| | | | 1 | 2 | 3 | 4 | 5 | 6 | 7 | 8 | 9 | 10 | 11 | 12 | 13 | 14 | 15 | 16 | | Subgroup 1 $T_A$ = 25°C | | Subgroup 2 $T_A$ = 125°C | | Subgroup 3 $T_A$ = -55°C | | |
| | | Symbol | $IN_S$ | $A_1$ | $B_1$ | $D_1$ | $A_2$ | $B_2$ | $D_2$ | $V_{SS}$ | $D_3$ | $B_3$ | $A_3$ | $D_4$ | $B_4$ | $A_4$ | $O_D$ | $V_{DD}$ | | Min | Max | Min | Max | Min | Max | |
| | | Test No. | | | | | | | | | | | | | | | | | | | | | | | | |
| $I_{IL2}$ 3/ | 3009 | 108 | 18.0 V | 18.0 V | 18.0 V | | 18.0 V | 18.0 V | | GND | | 18.0 V | 18.0 V | | GND | 18.0 V | GND | 18.0 V | $B_4$ | | -1.0 | | -45 | | | nA |
| $I_{IL2}$ 3/ | 3009 | 109 | 18.0 V | 18.0 V | 18.0 V | | 18.0 V | 18.0 V | | | | 18.0 V | 18.0 V | | 18.0 V | GND | | 18.0 V | $A_4$ | | -1.0 | | -45 | | | nA |
| $I_{IL2}$ 3/ | 3009 | 110 | 18.0 V | 18.0 V | 18.0 V | | 18.0 V | 18.0 V | | | | 18.0 V | 18.0 V | | 18.0 V | 18.0 V | | 18.0 V | $O_D$ | | -1.0 | | -45 | | | nA |
| $I_{OL1}$ | | 111 | GND | GND | GND | 0.4 V | GND | GND | | | | GND | GND | | GND | GND | | 5.0 V | $D_1$ | 0.51 | | 0.36 | | 0.64 | | mA |
| | | 112 | | | | | | | 0.4 V | | | | | | | | | | $D_2$ | | | | | | | |
| | | 113 | | | | | | | | | 0.4 V | | | | | | | | $D_3$ | | | | | | | |
| | | 114 | | | | | | | | | | | | 0.4 V | | | | | $D_4$ | | | | | | | |
| | | 115 | 5.0 V | | | 0.4 V | | | | | | | | | | | | | $D_1$ | | | | | | | |
| | | 116 | | | | | | | 0.4 V | | | | | | | | | | $D_2$ | | | | | | | |
| | | 117 | | | | | | | | | 0.4 V | | | | | | | | $D_3$ | | | | | | | |
| | | 118 | | | | | | | | | | | | 0.4 V | | | | | $D_4$ | | | | | | | |
| $I_{OH1}$ | | 119 | | 5.0 V | 5.0 V | 4.6 V | 5.0 V | 5.0 V | | | | 5.0 V | 5.0 V | | 5.0 V | 5.0 V | | | $D_1$ | -0.51 | | -0.36 | | -0.64 | | |
| | | 120 | | | | | | | 4.6 V | | | | | | | | | | $D_2$ | | | | | | | |
| | | 121 | | | | | | | | | 4.6 V | | | | | | | | $D_3$ | | | | | | | |
| | | 122 | | | | | | | | | | | | 4.6 V | | | | | $D_4$ | | | | | | | |
| | | 123 | GND | | | 4.6 V | | | | | | | | | | | | | $D_1$ | | | | | | | |
| | | 124 | | | | | | | 4.6 V | | | | | | | | | | $D_2$ | | | | | | | |
| | | 125 | | | | | | | | | 4.6 V | | | | | | | | $D_3$ | | | | | | | |
| | | 126 | | | | | | | | | | | | 4.6 V | | | | | $D_4$ | | | | | | | |
| $I_{OL2}$ | | 127 | | GND | GND | 1.5 V | GND | GND | | | | GND | GND | | GND | GND | | 15.0 V | $D_1$ | 3.4 | | 2.4 | | 4.2 | | |
| | | 128 | | | | | | | 1.5 V | | | | | | | | | | $D_2$ | | | | | | | |
| | | 129 | | | | | | | | | 1.5 V | | | | | | | | $D_3$ | | | | | | | |
| | | 130 | | | | | | | | | | | | 1.5 V | | | | | $D_4$ | | | | | | | |
| | | 131 | 15.0 V | | | 1.5 V | | | | | | | | | | | | | $D_1$ | | | | | | | |
| | | 132 | | | | | | | 1.5 V | | | | | | | | | | $D_2$ | | | | | | | |
| | | 133 | | | | | | | | | 1.5 V | | | | | | | | $D_3$ | | | | | | | |
| | | 134 | | | | | | | | | | | | 1.5 V | | | | | $D_4$ | | | | | | | |

See footnotes at end of table.

TABLE III. Group A inspection for device type 03 - Continued.

| Symbol | MIL-STD-883 method | Cases E,F,X | Terminal conditions 1/ | | | | | | | | | | | | | | | | Measured terminal | Test limits | | | | | | Units |
|---|---|---|---|---|---|---|---|---|---|---|---|---|---|---|---|---|---|---|---|---|---|---|---|---|---|---|
| | | | 1 | 2 | 3 | 4 | 5 | 6 | 7 | 8 | 9 | 10 | 11 | 12 | 13 | 14 | 15 | 16 | | Subgroup 1 $T_A$ = 25°C | | Subgroup 2 $T_A$ = 125°C | | Subgroup 3 $T_A$ = -55°C | | |
| | | Symbol | $IN_S$ | $A_1$ | $B_1$ | $D_1$ | $A_2$ | $B_2$ | $D_2$ | $V_{SS}$ | $D_3$ | $B_3$ | $A_3$ | $D_4$ | $B_4$ | $A_4$ | $O_D$ | $V_{DD}$ | | | | | | | | |
| | | Test No. | | | | | | | | | | | | | | | | | | Min | Max | Min | Max | Min | Max | |
| $I_{OH2}$ | | 135 | 15.0 V | 15.0 V | 15.0 V | 13.5 V | 15.0 V | 15.0 V | | GND | | 15.0 V | 15.0 V | | 15.0 V | 15.0 V | GND | 15.0 V | $D_1$ | -3.4 | | -2.4 | | -4.2 | | mA |
| | | 136 | | | | | | | 13.5 V | | | | | | | | | | $D_2$ | | | | | | | |
| | | 137 | | | | | | | | | 13.5 V | | | | | | | | $D_3$ | | | | | | | |
| | | 138 | | | | | | | | | | | | 13.5 V | | | | | $D_4$ | | | | | | | |
| | | 139 | GND | | | 13.5 V | | | | | | | | | | | | | $D_1$ | | | | | | | |
| | | 140 | | | | | | | 13.5 V | | | | | | | | | | $D_2$ | | | | | | | |
| | | 141 | | | | | | | | | 13.5 V | | | | | | | | $D_3$ | | | | | | | |
| | | 142 | | | | | | | | | | | | 13.5 V | | | | | $D_4$ | | | | | | | |
| $I_{OC11}$ | | 143 | 18.0 V | 18.0 V | 18.0 V | 18.0 V | 18.0 V | 18.0 V | 18.0 V | | 18.0 V | 18.0 V | 18.0 V | 18.0 V | 18.0 V | 18.0 V | 18.0 V | 18.0 V | All outputs | | 100 | | | | | nA |
| $I_{OC12}$ | | 144 | | | | 18.0 V | | | | | | | | | | | | | $D_1$ | | 25 | | 90 | | | |
| | | 145 | | | | | | | 18.0 V | | | | | | | | | | $D_2$ | | | | | | | |
| | | 146 | | | | | | | | | 18.0 V | | | | | | | | $D_3$ | | | | | | | |
| | | 147 | | | | | | | | | | | | 18.0 V | | | | | $D_4$ | | | | | | | |
| $I_{OC21}$ | | 148 | | | | GND | | | GND | | GND | | | GND | | | | | All outputs | | -100 | | | | | |
| $I_{OC22}$ | | 149 | | | | GND | | | | | | | | | | | | | $D_1$ | | -25 | | -90 | | | |
| | | 150 | | | | | | | GND | | | | | | | | | | $D_2$ | | | | | | | |
| | | 151 | | | | | | | | | GND | | | | | | | | $D_3$ | | | | | | | |
| | | 152 | | | | | | | | | | | | GND | | | | | $D_4$ | | | | | | | |
| | | | | | | | | | | | | | | | | | | | | Subgroup 4 $T_A$ = 25°C | | | | | | |
| | | | | | | | | | | | | | | | | | | | | Min | Max | | | | | |
| $C_{IS}$ | 3012 | 153 | 4/ | | | | | | | GND | | | | | | | | GND | $IN_S$ | | 7.5 | | | | | pF |
| | | 154 | | 4/ | | | | | | | | | | | | | | | $A_1$ | | | | | | | |
| | | 155 | | | 4/ | | | | | | | | | | | | | | $B_1$ | | | | | | | |
| | | 156 | | | | | 4/ | | | | | | | | | | | | $A_2$ | | | | | | | |
| | | 157 | | | | | | 4/ | | | | | | | | | | | $B_2$ | | | | | | | |
| | | 158 | | | | | | | | | | 4/ | | | | | | | $B_3$ | | | | | | | |

See footnotes at end of table.

TABLE III. Group A inspection for device type 03 - Continued.

| Symbol | MIL-STD-883 method | Cases E,F,X | Terminal conditions 1/ | | | | | | | | | | | | | | | | Measured terminal | Test limits | | | | | | Units |
|---|---|---|---|---|---|---|---|---|---|---|---|---|---|---|---|---|---|---|---|---|---|---|---|---|---|---|
| | | | 1 | 2 | 3 | 4 | 5 | 6 | 7 | 8 | 9 | 10 | 11 | 12 | 13 | 14 | 15 | 16 | | Subgroup 4 $T_A$ = 25°C | | | | | | |
| | | Symbol | $IN_S$ | $A_1$ | $B_1$ | $D_1$ | $A_2$ | $B_2$ | $D_2$ | $V_{SS}$ | $D_3$ | $B_3$ | $A_3$ | $D_4$ | $B_4$ | $A_4$ | $O_D$ | $V_{DD}$ | | Min | Max | Min | Max | Min | Max | |
| | | Test No. | | | | | | | | | | | | | | | | | | | | | | | | |
| $C_{IS}$ | 3012 | 159 | | | | | | | | GND | | | 4/ | | | | | GND | $A_3$ | | 7.5 | | | | | pF |
| | | 160 | | | | | | | | | | | | | 4/ | | | | $B_4$ | | | | | | | |
| | | 161 | | | | | | | | | | | | | | 4/ | | | $A_4$ | | | | | | | |
| | | 162 | | | | | | | | | | | | | | | 4/ | | $O_D$ | | | | | | | |
| | | | | | | | | | | | | | | | | | | | | Subgroup 9 $T_A$ = 25°C | | Subgroup 10 $T_A$ = 125°C | | Subgroup 11 $T_A$ = -55°C | | |
| | | | | | | | | | | | | | | | | | | | | Min | Max | Min | Max | Min | Max | |
| $t_{PHL1}$ and $t_{PLH1}$ | 3003 Fig. 16 | 163 | GND | IN | 5.0 V | OUT | GND | GND | | GND | | GND | GND | | GND | GND | GND | 5.0 V | $A_1 \rightarrow D_1$ | 15 | 300 | 21 | 420 | 15 | 300 | ns |
| | | 164 | 5.0 V | 5.0 V | IN | OUT | GND | GND | | | | | | | | | | | $B_1 \rightarrow D_1$ | | | | | | | |
| | | 165 | GND | GND | GND | | IN | 5.0 V | OUT | | | | | | | | | | $A_2 \rightarrow D_2$ | | | | | | | |
| | | 166 | 5.0 V | | | | 5.0 V | IN | OUT | | | | | | | | | | $B_2 \rightarrow D_2$ | | | | | | | |
| | | 167 | GND | | | | GND | GND | | | OUT | 5.0 V | IN | | | | | | $A_3 \rightarrow D_3$ | | | | | | | |
| | | 168 | 5.0 V | | | | | | | | OUT | IN | 5.0 V | | | | | | $B_3 \rightarrow D_3$ | | | | | | | |
| | | 169 | GND | | | | | | | | | GND | GND | OUT | 5.0 V | IN | | | $A_4 \rightarrow D_4$ | | | | | | | |
| | | 170 | 5.0 V | | | | | | | | | | | OUT | IN | 5.0 V | | | $B_4 \rightarrow D_4$ | | | | | | | |
| $t_{PHL2}$ and $t_{PLH2}$ | 3003 Fig. 17 | 171 | IN | 5.0 V | | OUT | | | | | | | | | GND | GND | | | $IN_S \rightarrow D_1$ | 18 | 350 | 25 | 490 | 18 | 350 | |
| | | 172 | | GND | 5.0 V | OUT | | | | | | | | | | | | | $IN_S \rightarrow D_1$ | | | | | | | |
| | | 173 | | | GND | | 5.0 V | | OUT | | | | | | | | | | $IN_S \rightarrow D_2$ | | | | | | | |
| | | 174 | | | | | GND | 5.0 V | OUT | | | | | | | | | | $IN_S \rightarrow D_2$ | | | | | | | |
| | | 175 | | | | | | GND | | | OUT | | 5.0 V | | | | | | $IN_S \rightarrow D_3$ | | | | | | | |
| | | 176 | | | | | | | | | OUT | 5.0 V | GND | | | | | | $IN_S \rightarrow D_3$ | | | | | | | |
| | | 177 | | | | | | | | | | GND | GND | OUT | | 5.0 V | | | $IN_S \rightarrow D_4$ | | | | | | | |
| | | 178 | | | | | | | | | | GND | GND | OUT | 5.0 V | GND | | | $IN_S \rightarrow D_4$ | | | | | | | |
| $t_{PZH}$ | Fig. 18 | 179 | GND | 5.0 V | 5.0 V | OUT | 5.0 V | 5.0 V | | | | 5.0 V | 5.0 V | | | 5.0 V | IN | | $O_D \rightarrow D_1$ | 9 | 180 | 13 | 250 | 9 | 180 | |
| | | 180 | | | | | | | OUT | | | | | | | | | | $O_D \rightarrow D_2$ | | | | | | | |
| | | 181 | | | | | | | | | OUT | | | | | | | | $O_D \rightarrow D_3$ | | | | | | | |
| | | 182 | | | | | | | | | | | | OUT | | | | | $O_D \rightarrow D_4$ | | | | | | | |

See footnotes at end of table.

TABLE III. Group A inspection for device type 03 - Continued.

| Symbol | MIL-STD-883 method | Cases E,F,X | Terminal conditions 1/ | | | | | | | | | | | | | | | | Measured terminal | Test limits | | | | | | Units |
|---|---|---|---|---|---|---|---|---|---|---|---|---|---|---|---|---|---|---|---|---|---|---|---|---|---|---|
| | | | 1 | 2 | 3 | 4 | 5 | 6 | 7 | 8 | 9 | 10 | 11 | 12 | 13 | 14 | 15 | 16 | | Subgroup 9 $T_A$ = 25°C | | Subgroup 10 $T_A$ = 125°C | | Subgroup 11 $T_A$ = -55°C | | |
| | | Symbol | $IN_S$ | $A_1$ | $B_1$ | $D_1$ | $A_2$ | $B_2$ | $D_2$ | $V_{SS}$ | $D_3$ | $B_3$ | $A_3$ | $D_4$ | $B_4$ | $A_4$ | $O_D$ | $V_{DD}$ | | | | | | | | |
| | | Test No. | | | | | | | | | | | | | | | | | | Min | Max | Min | Max | Min | Max | |
| $t_{PHZ}$ | Fig. 18 | 183 | GND | 5.0 V | 5.0 V | OUT | 5.0 V | 5.0 V | | GND | | 5.0 V | 5.0 V | | 5.0 V | 5.0 V | IN | 5.0 V | $O_D \rightarrow D_1$ | 9 | 180 | 13 | 250 | 9 | 180 | ns |
| | | 184 | | | | | | | OUT | | | | | | | | | | $O_D \rightarrow D_2$ | | | | | | | |
| | | 185 | | | | | | | | | OUT | | | | | | | | $O_D \rightarrow D_3$ | | | | | | | |
| | | 186 | | | | | | | | | | | | OUT | | | | | $O_D \rightarrow D_4$ | | | | | | | |
| $t_{PZL}$ | | 187 | | GND | GND | OUT | GND | GND | | | | GND | GND | | GND | GND | | | $O_D \rightarrow D_1$ | | | | | | | |
| | | 188 | | | | | | | OUT | | | | | | | | | | $O_D \rightarrow D_2$ | | | | | | | |
| | | 189 | | | | | | | | | OUT | | | | | | | | $O_D \rightarrow D_3$ | | | | | | | |
| | | 190 | | | | | | | | | | | | OUT | | | | | $O_D \rightarrow D_4$ | | | | | | | |
| $t_{PLZ}$ | | 191 | | | | OUT | | | | | | | | | | | | | $O_D \rightarrow D_1$ | | | | | | | |
| | | 192 | | | | | | | OUT | | | | | | | | | | $O_D \rightarrow D_2$ | | | | | | | |
| | | 193 | | | | | | | | | OUT | | | | | | | | $O_D \rightarrow D_3$ | | | | | | | |
| | | 194 | | | | | | | | | | | | OUT | | | | | $O_D \rightarrow D_4$ | | | | | | | |
| $t_{THL}$ and $t_{TLH}$ | 3004 | 195 | | IN | 5.0 V | OUT | | | | | | | | | | | | | $D_1$ | 10 | 200 | 14 | 280 | 10 | 200 | |
| | | 196 | | 5.0 V | IN | OUT | | | | | | | | | | | GND | | $D_1$ | | | | | | | |
| | | 197 | | | GND | | IN | 5.0 V | OUT | | | | | | | | | | $D_2$ | | | | | | | |
| | | 198 | | | | | 5.0 V | IN | OUT | | | | | | | | | | $D_2$ | | | | | | | |
| | | 199 | | | | | GND | GND | | | OUT | 5.0 V | IN | | | | | | $D_3$ | | | | | | | |
| | | 200 | | | | | | | | | OUT | IN | 5.0 V | | | | | | $D_3$ | | | | | | | |
| | | 201 | | | | | | | | | | GND | GND | OUT | 5.0 V | IN | | | $D_4$ | | | | | | | |
| | | 202 | | | | | | | | | | GND | GND | OUT | IN | 5.0 V | | | $D_4$ | | | | | | | |
| | | | | | | | | | | | | | | | | | | | | Subgroup 12 $T_A$ = 25°C | | | | | | |
| | | | | | | | | | | | | | | | | | | | | Min | Max | | | | | |
| $t_{PHL1}$ and $t_{PLH1}$ | 3003 Fig. 16 | 203 | GND | IN | 10.0 V | OUT | GND | GND | | GND | | GND | GND | | GND | GND | GND | 10.0 V | $A_1 \rightarrow D_1$ | 7 | 140 | | | | | ns |
| | | 204 | | 10.0 V | IN | OUT | GND | GND | | | | | | | | | | | $B_1 \rightarrow D_1$ | | | | | | | |
| | | 205 | | GND | GND | | IN | 10.0 V | OUT | | | | | | | | | | $A_2 \rightarrow D_2$ | | | | | | | |
| | | 206 | | GND | GND | | 10.0 V | IN | OUT | | | | | | | | | | $B_2 \rightarrow D_2$ | | | | | | | |

See footnotes at end of table.

TABLE III. Group A inspection for device type 03 - Continued.

| Symbol | MIL-STD-883 method | Cases E,F,X | Terminal conditions 1/ | | | | | | | | | | | | | | | | Measured terminal | Test limits | | | | | | Units |
|---|---|---|---|---|---|---|---|---|---|---|---|---|---|---|---|---|---|---|---|---|---|---|---|---|---|---|
| | | | 1 | 2 | 3 | 4 | 5 | 6 | 7 | 8 | 9 | 10 | 11 | 12 | 13 | 14 | 15 | 16 | | Subgroup 12 $T_A$ = 25°C | | | | | | |
| | | Symbol | $IN_S$ | $A_1$ | $B_1$ | $D_1$ | $A_2$ | $B_2$ | $D_2$ | $V_{SS}$ | $D_3$ | $B_3$ | $A_3$ | $D_4$ | $B_4$ | $A_4$ | $O_D$ | $V_{DD}$ | | | | | | | | |
| | | Test No. | | | | | | | | | | | | | | | | | | Min | Max | Min | Max | Min | Max | |
| $t_{PHL1}$ and $t_{PLH1}$ | 3003 Fig. 16 | 207 | GND | GND | GND | | GND | GND | | GND | OUT | 10.0 V | IN | | GND | GND | GND | 10.0 V | $A_3 \rightarrow D_3$ | 7 | 140 | | | | | ns |
| | | 208 | | | | | | | | | OUT | IN | 10.0 V | | GND | GND | | | $B_3 \rightarrow D_3$ | | | | | | | |
| | | 209 | | | | | | | | | | GND | GND | OUT | 10.0 V | IN | | | $A_4 \rightarrow D_4$ | | | | | | | |
| | | 210 | | | | | | | | | | | | OUT | IN | 10.0 V | | | $B_4 \rightarrow D_4$ | | | | | | | |
| $t_{PHL2}$ and $t_{PLH2}$ | 3003 Fig. 17 | 211 | IN | 10.0 V | | OUT | | | | | | | | | GND | GND | | | $IN_S \rightarrow D_1$ | 8 | 170 | | | | | |
| | | 212 | | GND | 10.0 V | OUT | | | | | | | | | | | | | $IN_S \rightarrow D_1$ | | | | | | | |
| | | 213 | | | GND | | 10.0 V | | OUT | | | | | | | | | | $IN_S \rightarrow D_2$ | | | | | | | |
| | | 214 | | | | | GND | 10.0 V | OUT | | | | | | | | | | $IN_S \rightarrow D_2$ | | | | | | | |
| | | 215 | | | | | | GND | | | OUT | | 10.0 V | | | | | | $IN_S \rightarrow D_3$ | | | | | | | |
| | | 216 | | | | | | | | | OUT | 10.0 V | GND | | | | | | $IN_S \rightarrow D_3$ | | | | | | | |
| | | 217 | | | | | | | | | | GND | GND | OUT | | 10.0 V | | | $IN_S \rightarrow D_4$ | | | | | | | |
| | | 218 | | | | | | | | | | GND | GND | OUT | 10.0 V | GND | | | $IN_S \rightarrow D_4$ | | | | | | | |
| $t_{PZH}$ | Fig. 18 | 219 | GND | 10.0 V | 10.0 V | OUT | 10.0 V | 10.0 V | | | | 10.0 V | 10.0 V | | | 10.0 V | IN | | $O_D \rightarrow D_1$ | 5 | 100 | | | | | |
| | | 220 | | | | | | | OUT | | | | | | | | | | $O_D \rightarrow D_2$ | | | | | | | |
| | | 221 | | | | | | | | | OUT | | | | | | | | $O_D \rightarrow D_3$ | | | | | | | |
| | | 222 | | | | | | | | | | | | OUT | | | | | $O_D \rightarrow D_4$ | | | | | | | |
| $t_{PHZ}$ | | 223 | | | | OUT | | | | | | | | | | | | | $O_D \rightarrow D_1$ | | | | | | | |
| | | 224 | | | | | | | OUT | | | | | | | | | | $O_D \rightarrow D_2$ | | | | | | | |
| | | 225 | | | | | | | | | OUT | | | | | | | | $O_D \rightarrow D_3$ | | | | | | | |
| | | 226 | | | | | | | | | | | | OUT | | | | | $O_D \rightarrow D_4$ | | | | | | | |
| $t_{PZL}$ | | 227 | | GND | GND | OUT | GND | GND | | | | GND | GND | | GND | GND | | | $O_D \rightarrow D_1$ | | | | | | | |
| | | 228 | | | | | | | OUT | | | | | | | | | | $O_D \rightarrow D_2$ | | | | | | | |
| | | 229 | | | | | | | | | OUT | | | | | | | | $O_D \rightarrow D_3$ | | | | | | | |
| | | 230 | | | | | | | | | | | | OUT | | | | | $O_D \rightarrow D_4$ | | | | | | | |
| | | 231 | | | | OUT | | | | | | | | | | | | | $O_D \rightarrow D_1$ | | | | | | | |
| | | 232 | | | | | | | OUT | | | | | | | | | | $O_D \rightarrow D_2$ | | | | | | | |
| | | 233 | | | | | | | | | OUT | | | | | | | | $O_D \rightarrow D_3$ | | | | | | | |
| | | 234 | | | | | | | | | | | | OUT | | | | | $O_D \rightarrow D_4$ | | | | | | | |

See footnotes at end of table.

TABLE III. Group A inspection for device type 03 - Continued.

| Symbol | MIL-STD-883 method | Cases E,F,X | Terminal conditions 1/ | | | | | | | | | | | | | | | | Measured terminal | Test limits | | | | | | Units |
|---|---|---|---|---|---|---|---|---|---|---|---|---|---|---|---|---|---|---|---|---|---|---|---|---|---|---|
| | | | 1 | 2 | 3 | 4 | 5 | 6 | 7 | 8 | 9 | 10 | 11 | 12 | 13 | 14 | 15 | 16 | | Subgroup 12 $T_A$ = 25°C | | | | | | |
| | | Symbol | $IN_S$ | $A_1$ | $B_1$ | $D_1$ | $A_2$ | $B_2$ | $D_2$ | $V_{SS}$ | $D_3$ | $B_3$ | $A_3$ | $D_4$ | $B_4$ | $A_4$ | $O_D$ | $V_{DD}$ | | | | | | | | |
| | | Test No. | | | | | | | | | | | | | | | | | | Min | Max | Min | Max | Min | Max | |
| $t_{THL}$ and $t_{TLH}$ | 3004 | 235 | GND | IN | 10.0 V | OUT | GND | GND | | GND | | GND | GND | | GND | GND | GND | 10.0 V | $D_1$ | 5 | 100 | | | | | ns |
| | | 236 | | 10.0 V | IN | OUT | GND | GND | | | | | | | | | | | $D_1$ | | | | | | | |
| | | 237 | | GND | GND | | IN | 10.0 V | OUT | | | | | | | | | | $D_2$ | | | | | | | |
| | | 238 | | | | | 10.0 V | IN | OUT | | | | | | | | | | $D_2$ | | | | | | | |
| | | 239 | | | | | GND | GND | | | OUT | 10.0 V | IN | | | | | | $D_3$ | | | | | | | |
| | | 240 | | | | | | | | | OUT | IN | 10.0 V | | | | | | $D_3$ | | | | | | | |
| | | 241 | | | | | | | | | | GND | GND | OUT | 10.0 V | IN | | | $D_4$ | | | | | | | |
| | | 242 | | | | | | | | | | GND | GND | OUT | IN | 10.0 V | | | $D_4$ | | | | | | | |

1/ Pins not designated may be "high" level logic, "low" level logic or open. Exceptions are as follows: $V_{IC(pos)}$ tests, the $V_{SS}$ terminal shall be open; $V_{IC(neg)}$ tests, the $V_{DD}$ terminal shall be open; $I_{SS}$ tests, the output terminals shall be open.

2/ The $I_{SS}$ measurements shall be performed in sequence.

3/ The device manufacturer may, at his option, measure $I_{IL}$ and $I_{IH}$ at 25°C for each individual input or measure all inputs together.

4/ $C_C$ and $C_{IS}$ - Connect capacitance bridge between measured input terminal and $V_{SS}$, frequency = 1 MHz, see 4.4.1.c.

5/ $C_{OS}$ - Connect capacitance bridge between measured output terminal and $V_{SS}$, frequency = 1 MHz, see 4.4.1.c.

6/ $C_{IOS}$ - Connect capacitance bridge between measured input and output terminals, frequency = 1 MHz, see 4.4.1.c.

7/ For $V_{IH}$: Measured terminal shall be connected to ground (GND) through a 3.1 Kohm resistor. All channels shall be connected to GND through a 3.1 Kohm resistor.

For $V_{IL}$: Measured terminals shall be connected to GND through a 470 Kohm resistor and all other channels shall be connected to GND through a 3.1 Kohm resistor. The current through the resistor shall not be greater than 1.05 µA.

4.4.3 Group C inspection. Group C inspection shall be in accordance with table III of method 5005 of MIL-STD-883 and as follows:

a. End-point electrical parameters shall be as specified in table II herein. Delta limits shall apply only to subgroup 1 of group C inspection and shall consist of tests specified in table IV herein.

b. Steady-state life test (method 1005 of MIL-STD-883) conditions:

(1) Test condition D and as specified in 4.5.2 herein and as shown on figure 5, or equivalent.

(2) $T_A$ = +125°C minimum.

(3) Test duration, 1,000 hours, except as permitted by appendix B of MIL-M-38510 and method 1005 of MIL-STD-883.

c. Subgroups 3 and 4 shall be added to the group C inspection requirements for class B devices, and shall consist of the tests, conditions, and limits as specified for subgroups 10 and 11 of group A.

4.4.4 Group D inspection. Group D inspection shall be in accordance with table IV of method 5005 of MIL-STD-883. End-point electrical parameters shall be as specified in table II herein.

4.4.5 Group E inspection. Group E inspection is required only for device types intended to be marked as radiation hardened (see 3.6.1). When group E testing is performed it shall be in accordance with table V of method 5005 of MIL-STD-883 and 4.5.5 herein.

4.5 Methods of inspection. Methods of inspection shall be specified as follows:

4.5.1 Voltage and current. Unless otherwise specified, all voltages given are referenced to the microcircuit $V_{SS}$ terminal. Currents given are conventional current and positive when flowing into the referenced terminal.

4.5.2 Burn-in and life test cool down procedures. When the burn-in and life tests are completed and prior to removal of bias voltages, the devices under test (DUT) shall be cooled to a temperature of 25°C ±3°C; then, electrical parameter end-point measurements shall be performed.

TABLE IV. Delta limits at 25°C.

| Parameter 1/ | Device types | | |
|---|---|---|---|
| $I_{SS}$ | ±10 nA | ±10 nA | ±10 nA |
| $I_{OL1}$ | --- | --- | ±15% |
| $I_{OH1}$ | --- | --- | ±15% |
| $R_{ON1}$ | 50 ohms | 50 ohms | --- |
| $R_{ON2}$ | 20 ohms | 20 ohms | --- |
| $R_{ON3}$ | 15 ohms | 15 ohms | --- |

1/ Each of the above parameters shall be recorded before and after the required burn-in and life tests to determine deltas (Δ).

4.5.3 High voltage ($V_{ZAP}$) test or input protection circuits. All input terminals (up to a maximum of 4) of the DUT shall be subjected to a voltage pulse from a 100 pF source charged to 400 V. This destructive test shall be conducted as follows using the test circuit on figure 19.

a. Measure $I_{IL}$ and $I_{IH}$ at the inputs selected, as stated above, at 25°C. The test limit for each input tested shall be ±10 nA at the specified $V_{DD}$. Measure $I_{SS}$ on the DUT at 25°C. The test limit for this measurement shall be increased a maximum of 20 percent of the specified $I_{SS}$ table III limit at the specified $V_{DD}$.

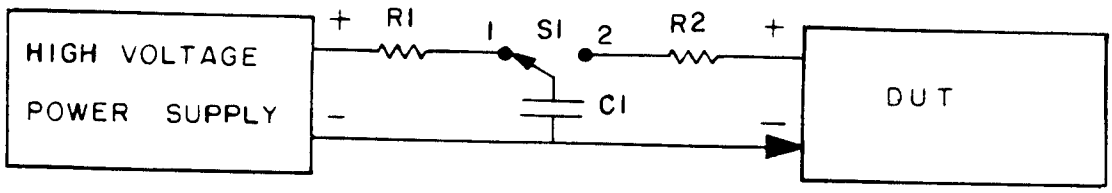


$V_{ZAP}$ = 400 V charge on C1.
1 MΩ ≤ R1 ≤ 50 MΩ
R2 = 1.5 kΩ
C1 = 100 pF
S1 = Hg-wetted "bounceless" relay

FIGURE 19. High Voltage ($V_{ZAP}$) test circuit.

b. $V_{ZAP}$ is applied to DUT in the following four modes (see table V) by changing C1 to $V_{ZAP}$ with S1 in position 1 and then switching to position 2.

TABLE V. Modes for high voltage test.

| Mode | + Terminal | - Terminal |
|---|---|---|
| 1 | $V_{DD}$ | Input |
| 2 | Input | $V_{SS}$ |
| 3 | Input | Associated Output |

c. Within 24 hours repeat the $I_{SS}$, $I_{IL}$, and $I_{IH}$ measurements on the same terminals as performed above. If a DUT exhibits leakage currents in excess of the specified limits after the $V_{ZAP}$ test, it shall be classified as a failure.

4.5.4 Quiescent supply current ($I_{SS}$ test). When performing quiescent supply current measurements ($I_{SS}$), the meter shall be placed so that all currents flow through the meter.

4.5.5 Radiation hardness assurance (RHA) testing. The RHA testing shall be performed in accordance with test procedures and sampling specified in table V of method 5005 of MIL-STD-883 and herein:

a. Before irradiation, selected samples shall be assembled in qualified packages and pass the governing electrical parameters (group A subgroup 1 at 25°C) and also be subjected to the threshold-voltage test in table VIII in order to calculate the delta threshold ($\Delta V_T$) after irradiation.

b. The devices shall be subjected to a total radiation dose as specified in MIL-M-38510 for the radiation hardness assurance (RHA) level being tested, and meet the end point electrical parameters as defined in table VI at 25°C, after exposure. The start and completion of the end point electrical parameter measurements shall not exceed 2 hours following irradiation.

c. Threshold-voltage test circuit conditions shall be as specified in table VIII and figure 20. In situ and remote testing, the tests shall be performed with the devices biased in accordance with table VII and bias may be interrupted for up to 1 minute to remove devices to the remote bias fixture.

d. After irradiation, the devices shall pass the truth table test as specified in subgroup 7 in table III or if subgroup 7 is not required, then an equivalent truth table test shall be performed.

TABLE VI. Radiation hardening end-point electrical parameters at 25°C.

| Parameter | All device types | $V_{DD}$ |
|---|---|---|
| $V_{TN}$ | 0.3 V min | 10 V |
| $V_{TP}$ | 2.8 V max | 10 V |
| $\Delta V_T$ | 1.4 V | 10 V |
| $I_{SS}$ | 100 x max limit | 18 V |
| $t_{PLH}$ | 1.35 x max limit | 5 V |
| $t_{PHL}$ | 1.35 x max limit | 5 V |

TABLE VII. Bias during exposure to radiation.

| Device type | Pin connections | | |
|---|---|---|---|
| | $V_{DD}$ = 10 V dc (through a 30- to 60-kΩ resistor) | $V_{SS}$ = GND | $V_{DD}$ = 10 V dc |
| 01 | 2,3,4,5,6,7,8,9,10,11,13,14,15,16, 17,18,19,20,21,22,23 | 12 | 24 |
| 02 | 2,3,4,5,6,7,8,9,10,11,13,14,15,16, 19,20,21,22,23 | 12 | 24 |
| 03 | 1,2,3,5,6,10,11,13,14,15 | 8 | 16 |

Pins not designated are open or connected to 10 V dc through a 30- to 60-kilohm resistor.

4.6 Data reporting. When specified in the purchase order or contract, a copy of the following data, as applicable, shall be supplied.

a. Attributes data for all screening tests (see 4.2) and variables data for all static burn-in, dynamic burn-in, and steady state life tests.

b. A copy of each radiograph.

c. The quality conformance inspection data (see 4.4).

d. Parameter distribution data on parameters evaluated during burn-in (see 3.6).

e. Final electrical parameters data (see 4.2c).

5. PACKAGING

5.1 Packaging requirements. The requirements for packaging shall be in accordance with MIL-M-38510.

6. NOTES

6.1 Intended use. Microcircuits conforming to this specification are intended for original equipment design application and logisitic support of existing equipment.

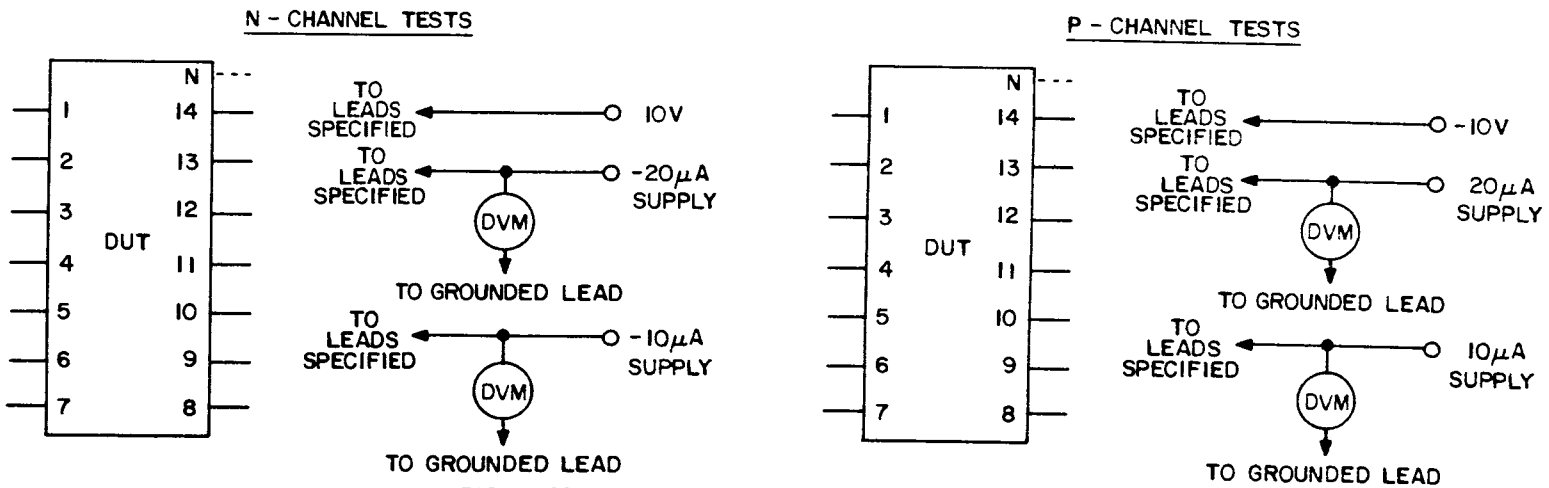


FIGURE 20. Threshold-voltage test circuit.

TABLE VIII. Threshold - voltage test circuit conditions.

| Device type | GND | 10V | $V_{TN}$ measured at | | GND | -10V | $V_{TP}$ measured at | |
|---|---|---|---|---|---|---|---|---|
| | | | -20 μA supply | -10 μA supply | | | 20 μA supply | 10 μA supply |
| 01 | 15 | 10,11,13,14,24 | | 12 | 15 | 10,11,12,13,14 | | 24 |
| 02 | 13 | 10,11,14,24 | | 12 | 13 | 10,11,12,14 | | 24 |
| 03 | 15 | 1,2,3,5,6,10, 11,13,14,16 | | 8 | 15 | 8 | | 1,2,3,5,6,10, 11,13,14,16 |

6.2 Ordering data. The acquisition document should specify the following:

a. Complete part number (see 1.2).

b. Requirements for delivery of one copy of the quality conformance inspection data pertinent to the device inspection lot to be supplied with each shipment by the device manufacturer, if applicable.

c. Requirements for certificate of compliance, if applicable.

d. Requirements for notification of change of product or process to the contracting activity in addition to notification to the qualifying activity, if applicable.

e. Requirements for failure analysis (including required test condition of method 5003 of MIL-STD-883), corrective action and reporting of results, if applicable.

f. Requirements for product assurance options.

g. Requirements for special carriers, lead lengths, or lead forming, if applicable. These requirements shall not affect the part number. Unless otherwise specified, these requirements shall not apply to direct purchase by, or direct shipment to the Government.

h. Requirements for "JAN" marking.

i. Requirements for total dose radiation testing (see 3.6.1 and 4.5.5), if applicable.

6.3 Abbreviations, symbols, and definitions. The abbreviations, symbols, and definitions used herein are defined in MIL-M-38510, MIL-STD-1331, and as follows:

| | |
|---|---|
| $C_i$ | Input terminal-to-$V_{SS}$ capacitance. |
| GND | Ground zero voltage potential. |
| $I_{SS}$ | Quiescent supply current. |
| $T_A$ | Free air temperature. |
| $t_f$ | Fall time. Time duration during which the amplitude of the trailing edge of the input forcing condition or waveform is decreasing from 90 to 10 percent of the maximum amplitude. |
| $t_r$ | Rise time. Time duration during which the amplitude of the leading edge of the input forcing condition or waveform is increasing from 10 to 90 percent of the maximum amplitude. |
| $V_{DD}$ | Positive supply voltage. |
| $V_{IC}$ | Input clamp voltage. |
| $V_{SS}$ | Negative supply voltage. |
| $V_{ZAP}$ | Input test voltage. |

6.4 Logistic support. Lead materials and finishes (see 3.3) are interchangeable. Unless otherwise specified, microcircuits acquired for Government logistic support will be acquired to device class S for National Aeronautics and Space Administration or class B for Department of Defense (see 1.2.2), lead finish C (see 3.3). Longer length leads and lead forming shall not affect the part number.

6.5 Substitutability. The cross-reference information below is presented for the convenience of users. Microcircuits covered by this specification will functionally replace the listed generic-industry type. Generic-industry microcircuit types may not have equivalent operational performance characteristics across military temperature ranges or reliability factors equivalent to MIL-M-38510 device types and may have slight physical variations in relation to case size. The presence of this information shall not be deemed as permitting substitution of generic-industry types for MIL-M-38510 types or as a waiver of any of the provisions of MIL-M-38510.

| Military device type | Generic-industry type |
|---|---|
| 01 | 4067B |
| 02 | 4097B |
| 03 | 40257B |

6.6 Handling. MOS devices must be handled with certain precautions to avoid damage due to accumulation of static charge. Input protective devices have been designed in the chip to minimize the effect of this static build up. However, the following handling practices are recommended:

a. Devices should be handled on benches with conductive and grounded surface.

b. Ground test equipment and tools.

c. Do not handle devices by the leads.

d. Store devices in conductive foam or carriers.

e. Avoid use of plastic, rubber, or silk in MOS areas.

f. Maintain relative humidity above 50 percent, if practical.

6.7 Changes from previous issue. Asterisks are not used in this revision to identify changes with respect to the previous issue, due to the extensiveness of the changes.

Custodians:
Army - ER
Navy - EC
Air Force - 17
NASA - NA

Review activities:
Army - MI
Air Force - 11, 19, 85, 99
DLA - ES

User activities:
Army - AR, SM
Navy - AS, CG, MC, OS, SH

Agent:
DLA - ES

Preparing activity:
NASA - NA

(Project 5962-0639-9)