INCH-POUND
MIL-M-38510/153B
22 February 2005
SUPERSEDING
MIL-M-38510/153A
11 March 1985

MILITARY SPECIFICATION

# MICROCIRCUITS, DIGITAL, TTL, QUADRUPLE BUS BUFFER GATES WITH THREE-STATE OUTPUTS, MONOLITHIC SILICON

Inactive for new design after 06 September 1996.

This specification is approved for use by all Departments and Agencies of the Department of Defense.

The requirements for acquiring the product herein shall consist of this specification sheet and MIL-PRF-38535.

## 1. SCOPE

1.1 Scope. This specification covers the detail requirements for monolithic silicon, TTL, quadruple bus buffer gates with three-state outputs. Two product assurance classes and a choice of case outlines and lead finishes are provided for each type and are reflected in the complete part number. For this product, the requirements of MIL-M-38510 have been superseded by MIL-PRF-38535, (see 6.3).

1.2 Part or identifying number (PIN). The PIN is in accordance with MIL-PRF-38535, and as specified herein.

1.2.1 Device types. The device types are as follows:

| Device type | Circuit |
|---|---|
| 01 | Quadruple bus buffer gate ( inverting control input ) |
| 02 | Quadruple bus buffer gate ( noninverting control input ) |

1.2.2 Device class. The device class is the product assurance level as defined in MIL-PRF-38535.

1.2.3 Case outlines. The case outlines are as designated in MIL-STD-1835 and as follows:

| Outline letter | Descriptive designator | Terminals | Package style |
|---|---|---|---|
| C | GDIP1-T14 or CDIP2-T14 | 14 | Dual-in-line |
| D | GDFP1-F14 or CDFP2-F14 | 14 | Flat pack |

Comments, suggestions, or questions on this document should be addressed to: Commander, Defense Supply Center Columbus, ATTN: DSCC-VAS, 3990 East Broad St., Columbus, OH 43218-3990, or emailed to bipolar@dscc.dla.mil. Since contact information can change, you may want to verify the currency of this address information using the ASSIST Online database at http://assist.daps.dla.mil.

1.3 Absolute maximum ratings.

Supply voltage range ..... -0.5 V dc to +7.0 V dc
Input voltage range ..... -1.5 V dc at -12 mA to +5.5 V dc
Storage temperature range ..... -65°C to +150°C
Maximum power dissipation ($P_D$):
Device type 01 ..... 303 mW 1/
Device type 02 ..... 347 mW 1/
Lead temperature (soldering, 10 seconds) ..... +300°C
Thermal resistance, junction to case ($\theta_{JC}$):
Cases C and D ..... See MIL-STD-1835
Junction temperature ($T_J$) ..... +175°C 2/

1.4 Recommended operating conditions.

Supply voltage ($V_{CC}$) ..... 4.5 V dc minimum to 5.5 V dc maximum
Minimum high level input voltage ($V_{IH}$) ..... 2.0 V dc maximum
Maximum low level input voltage ($V_{IL}$) ..... 0.8 V dc maximum
Case operating temperature range ($T_C$) ..... -55°C to +125°C

2. APPLICABLE DOCUMENTS

2.1 General. The documents listed in this section are specified in sections 3, 4, or 5 of this specification. This section does not include documents cited in other sections of this specification or recommended for additional information or as examples. While every effort has been made to ensure the completeness of this list, document users are cautioned that they must meet all specified requirements of documents cited in sections 3, 4, or 5 of this specification, whether or not they are listed.

2.2 Government documents.

2.2.1 Specifications, standards, and handbooks. The following specifications and standards form a part of this specification to the extent specified herein. Unless otherwise specified, the issues of these documents are those cited in the solicitation or contract.

DEPARTMENT OF DEFENSE SPECIFICATION

MIL-PRF-38535 - Integrated Circuits (Microcircuits) Manufacturing, General Specification for.

DEPARTMENT OF DEFENSE STANDARDS

MIL-STD-883 - Test Method Standard for Microelectronics.
MIL-STD-1835 - Interface Standard Electronic Component Case Outlines

(Copies of these documents are available online at http://assist.daps.dla.mil/quicksearch/ or http://assist.daps.dla.mil or from the Standardization Document Order Desk, 700 Robbins Avenue, Building 4D, Philadelphia, PA 19111-5094.)

2.3 Order of precedence. In the event of a conflict between the text of this specification and the references cited herein, the text of this document takes precedence. Nothing in this document, however, supersedes applicable laws and regulations unless a specific exemption has been obtained.

---

1/ Must withstand the added $P_D$ due to short-circuit test (e.g., $I_{OS}$).
2/ Maximum junction temperature shall not be exceeded except for allowable short duration burn-in screening conditions in accordance with MIL-PRF-38535.

## 3. REQUIREMENTS

3.1 Qualification. Microcircuits furnished under this specification shall be products that are manufactured by a manufacturer authorized by the qualifying activity for listing on the applicable qualified manufacturers list before contract award (see 4.3 and 6.4).

3.2 Item requirements. The individual item requirements shall be in accordance with MIL-PRF-38535 and as specified herein or as modified in the device manufacturer's Quality Management (QM) plan. The modification in the QM plan shall not affect the form, fit, or function as described herein.

3.3 Design, construction, and physical dimensions. The design, construction, and physical dimensions shall be as specified in MIL-PRF-38535 and herein.

3.3.1 Logic diagrams and terminal connections. The terminal connections shall be as specified on figure 1.

3.3.2 Schematic circuits. The schematic circuits shall be maintained by the manufacturer and made available to the qualifying activity and the preparing activity upon request.

3.3.3 Case outlines. The case outlines shall be as specified in 1.2.3.

3.4 Lead material and finish. The lead material and finish shall be in accordance with MIL-PRF-38535 (see 6.6).

3.5 Electrical performance characteristics. The electrical performance characteristics are as specified in table I, and apply over the full recommended case operating temperature range, unless otherwise specified.

3.6 Electrical test requirements. The electrical test requirements for each device class shall be the subgroups specified in table II. The electrical tests for each subgroup are described in table III.

3.7 Marking. Marking shall be in accordance with MIL-PRF-38535.

3.8 Microcircuit group assignment. The devices covered by this specification shall be in microcircuit group number 2 (see MIL-PRF-38535, appendix A).

## 4. VERIFICATION

4.1 Sampling and inspection. Sampling and inspection procedures shall be in accordance with MIL-PRF-38535 or as modified in the device manufacturer's Quality Management (QM) plan. The modification in the QM plan shall not effect the form, fit, or function as described herein.

4.2 Screening. Screening shall be in accordance with, MIL-PRF-38535 and shall be conducted on all devices prior to qualification and quality conformance inspection. The following additional criteria shall apply:

a. The burn-in test duration, test condition, and test temperature, or approved alternatives shall be as specified in the device manufacturer's QM plan in accordance with MIL-PRF-38535. The burn-in test circuit shall be maintained under document control by the device manufacturer's Technology Review Board (TRB) in accordance with MIL-PRF-38535 and shall be made available to the acquiring or preparing activity upon request. The test circuit shall specify the inputs, outputs, biases, and power dissipation, as applicable, in accordance with the intent specified in test method 1015 of MIL-STD-883.

b. Interim and final electrical test parameters shall be as specified in table II, except interim electrical parameters test prior to burn-in is optional at the discretion of the manufacturer.

c. Additional screening for space level product shall be as specified in MIL-PRF-38535.

4.3 Qualification inspection. Qualification inspection shall be in accordance with MIL-PRF-38535.

TABLE I. Electrical performance characteristics.

| Test | Symbol | Conditions $-55°C \le T_C \le +125°C$ | Device type | Limits Min | Limits Max | Unit |
|---|---|---|---|---|---|---|
| Input clamp voltage | $V_{IC}$ | $V_{CC}$ = 4.5 V, $I_{IN}$ = -12 mA | 01,02 | | -1.5 | V |
| High level output voltage | $V_{OH}$ | $V_{CC}$ = 4.5 V, $I_{OH}$ = -2 mA | 01,02 | 2.4 | | V |
| Low level output voltage | $V_{OL}$ | $V_{CC}$ = 4.5 V, $I_{OL}$ = 16 mA | 01,02 | | 0.4 | V |
| Off-state (high-impedance state) output current | $I_{O(off)1}$ | $V_{CC}$ = 5.5 V, $V_{OH}$ = 2.4 V | 01,02 | | 40 | µA |
| Off-state (high-impedance state) output current | $I_{O(off)2}$ | $V_{CC}$ = 5.5 V, $V_{OL}$ = 0.4 V | 01,02 | | -40 | µA |
| Input current at maximum input voltage | $I_{IH1}$ | $V_{CC}$ = 5.5 V, $V_{IH}$ = 5.5 V | 01,02 | | 100 | µA |
| Input current at minimum input voltage | $I_{IH2}$ | $V_{CC}$ = 5.5 V, $V_{IH}$ = 5.5 V | 01,02 | | 100 | µA |
| High level input current | $I_{IH3}$ | $V_{CC}$ = 5.5 V, $V_{IH}$ = 2.4 V | 01,02 | | 40 | µA |
| Low level input current | $I_{IL}$ | $V_{CC}$ = 5.5 V, $V_{IL}$ = 0.4 V | 01,02 | -0.7 | -1.6 | mA |
| Supply current | $I_{CC}$ | $V_{CC}$ = 5.5 V, data inputs = 0 V, output controls = 4.5 V | 01 | | 54 | mA |
| | | $V_{CC}$ = 5.5 V, data inputs = 0 V, output controls = 0 V | 02 | | 62 | |
| Short circuit output current 1/ | $I_{OS}$ | $V_{CC}$ = 5.5 V | 01,02 | -30 | -70 | mA |
| Propagation delay time (high to low level) | $t_{PHL}$ | $C_L$ = 50 pF ±10 %, $V_{CC}$ = 5.0 V | 01,02 | 2 | 22 | ns |
| Propagation delay time (low to high level) | $t_{PLH}$ | $C_L$ = 50 pF ±10 %, $V_{CC}$ = 5.0 V | 01,02 | 2 | 16 | ns |
| Output enable time to high level | $t_{PZH}$ | $V_{CC}$ = 5.0 V, $C_L$ = 50 pF ±10 % | 01 | 2 | 20 | ns |
| | | | 02 | 2 | 22 | |
| Output enable time to low level | $t_{PZL}$ | $V_{CC}$ = 5.0 V, $C_L$ = 50 pF ±10 % | 01,02 | 2 | 30 | ns |
| Output disable time from high level | $t_{PHZ}$ | $V_{CC}$ = 5.0 V, $C_L$ = 50 pF ±10 % | 01 | 2 | 21 | ns |
| | | | 02 | 2 | 31 | |
| Output disable time from low level | $t_{PLZ}$ | $V_{CC}$ = 5.0 V, $C_L$ = 50 pF ±10 % | 01 | 2 | 20 | ns |
| | | | 02 | 2 | 27 | |

1/ Not more than one output should be shorted at one time.

TABLE II. Electrical test requirements.

| MIL-PRF-38535 test requirements | Subgroups (see table III) | |
|---|---|---|
| | Class S devices | Class B devices |
| Interim electrical parameters | 1 | 1 |
| Final electrical test parameters | 1*, 2, 3, 9 | 1*, 2, 3, 9 |
| Group A test requirements | 1, 2, 3, 9, 10, 11 | 1, 2, 3, 9 |
| Group B electrical test parameters when using method 5005 QCI option | 1, 2, 3, 9, 10, 11 | N/A |
| Group C end-point electrical parameters | 1, 2, 3, 9, 10, 11 | 1, 2, 3 |
| Additional electrical subgroups for group C periodic inspections | N/A | 10, 11 |
| Group D end-point electrical parameters | 1, 2, 3 | 1, 2, 3 |

*PDA applies to subgroup.

4.4 Technology conformance inspection (TCI). Technology conformance inspection shall be in accordance with MIL-PRF-38535 and herein for groups A, B, C, and D inspections (see 4.4.1 through 4.4.4).

4.4.1 Group A inspection. Group A inspection shall be in accordance with table III of MIL-PRF-38535 and as follows:

a. Tests shall be as specified in table II herein.

b. Subgroups 4, 5, 6, 7, and 8 shall be omitted.

4.4.2 Group B inspection. Group B inspection shall be in accordance with table II MIL-PRF-38535.

4.4.3 Group C inspection. Group C inspection shall be in accordance with table IV of MIL-PRF-38535 and as follows:

a. End-point electrical parameters shall be as specified in table II herein.

b. The steady-state life test duration, test condition, and test temperature, or approved alternatives shall be as specified in the device manufacturer's QM plan in accordance with MIL-PRF-38535. The burn-in test circuit shall be maintained under document control by the device manufacturer's Technology Review Board (TRB) in accordance with MIL-PRF-38535 and shall be made available to the acquiring or preparing activity upon request. The test circuit shall specify the inputs, outputs, biases, and power dissipation, as applicable, in accordance with the intent specified in test method 1005 of MIL-STD-883.

c. Subgroups 10 and 11 of Group A shall be added to group C periodic inspection for class B devices and shall consists of the tests, conditions, and limits specified for subgroups 10 and 11 of group A.

4.4.4 Group D inspection. Group D inspection shall be in accordance with table V of MIL-PRF-38535. End-point electrical parameters shall be as specified in table II herein.

4.5 Methods of inspection. Methods of inspection shall be as specified and as follows:

4.5.1 Voltage and current. All voltages given are referenced to the microcircuit ground terminal. Currents given are conventional and positive when flowing into the referenced terminal.

DEVICE TYPE 01

CASES C AND D

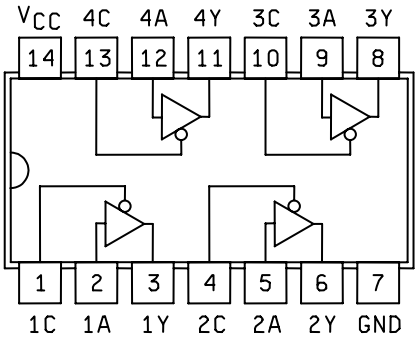


POSITIVE LOGIC:
Y = A
OUTPUT IS OFF (DISABLED) WHEN C IS HIGH.

DEVICE TYPE 02

CASES C AND D

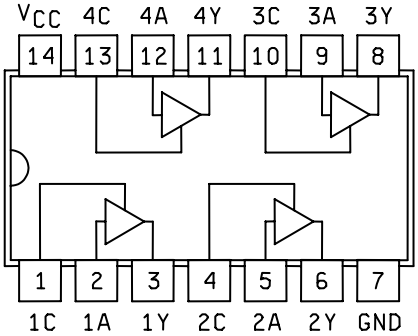


POSITIVE LOGIC:
Y = A
OUTPUT IS OFF (DISABLED) WHEN C IS LOW.

FIGURE 1. Logic diagram and terminal connections.

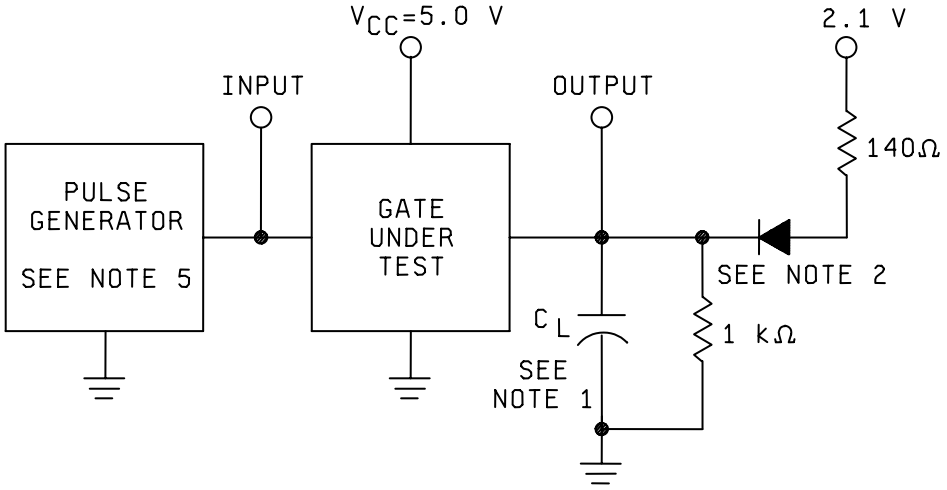


TEST CIRCUIT

NOTES:

1. $C_L$ = 50 pF ±10%; including scope probe and jig capacitance.
2. All diodes are 1N3064 or equivalent.
3. Waveform 1 is for an output with internal conditions such that the output is low except when disabled by the output control.
   Waveform 2 is for an output with internal conditions such that the output is high except when disabled by the output control.
4. In the examples above, the phase relationships between inputs and outputs have been chosen arbitrarily.
5. All input pulses are supplied by generators having the following characteristics:
   PRR ≤ 1 MHz, $t_p$ = 500 ns, $Z_{out}$ ≈ 50 ohms, $t_{TLH} = t_{THL} \leq 7$ ns, and $V_{gen}$ = 3.0 V.

FIGURE 2. Switching time test circuit for three state outputs.

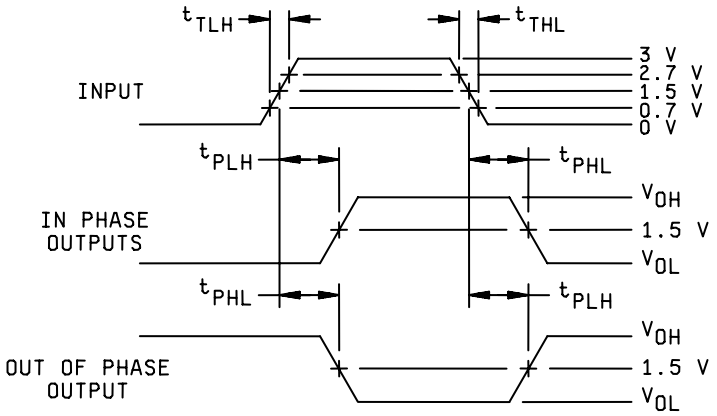


VOLTAGE WAVEFORMS
PROPAGATION DELAY TIMES

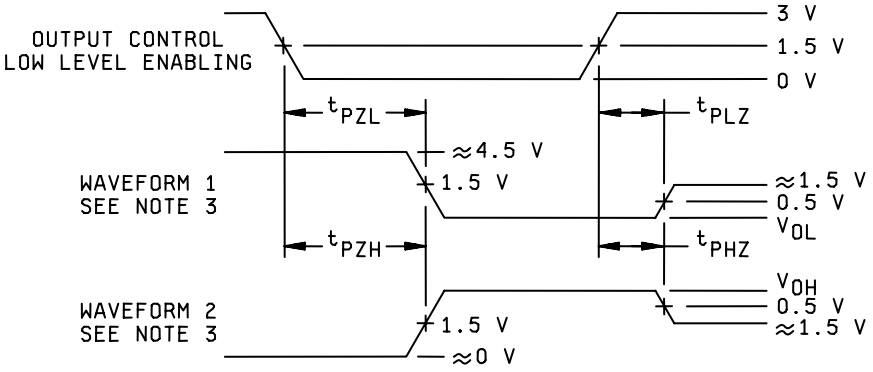


VOLTAGE WAVEFORMS
ENABLE AND DISABLE TIMES,
THREE-STATE OUTPUTS

FIGURE 2. Switching time test circuit for three state outputs – Continued.

TABLE III. Group A inspection for device type 01.
Terminal conditions (pins not designated may be high ≥ 2.0 V, low ≤ 0.8 V, or open).

| Subgroup | Symbol | MIL-STD-883 method | Cases C and D Test no. | 1 1C | 2 1A | 3 1Y | 4 2C | 5 2A | 6 2Y | 7 GND | 8 3Y | 9 3A | 10 3C | 11 4Y | 12 4A | 13 4C | 14 $V_{CC}$ | Measured terminal | Limits Min | Limits Max | Unit |
|---|---|---|---|---|---|---|---|---|---|---|---|---|---|---|---|---|---|---|---|---|---|
| 1 Tc = 25°C | $V_{IC}$ | | 1 | 4.5 V | -12 mA | | | | | GND | | | | | | | 4.5 V | 1A | | -1.5 | V |
| | | | 2 | -12 mA | | | | | | " | | | | | | | " | 1C | | " | " |
| | | | 3 | | | | 4.5 V | -12 mA | | " | | | | | | | " | 2A | | " | " |
| | | | 4 | | | | -12 mA | | | " | | | | | | | " | 2C | | " | " |
| | | | 5 | | | | | | | " | | -12 mA | 4.5 V | | | | " | 3A | | " | " |
| | | | 6 | | | | | | | " | | | -12 mA | | | | " | 3C | | " | " |
| | | | 7 | | | | | | | " | | | | | -12 mA | 4.5 V | " | 4A | | " | " |
| | | | 8 | | | | | | | " | | | | | | -12 mA | " | 4C | | " | " |
| | $V_{OH}$ | 3006 | 9 | 0.8 V | 2.0 V | -2 mA | | | | " | | | | | | | " | 1Y | 2.4 | | " |
| | | " | 10 | | | | 0.8 V | 2.0 V | -2 mA | " | | | | | | | " | 2Y | " | | " |
| | | " | 11 | | | | | | | " | -2 mA | 2.0 V | 0.8 V | | | | " | 3Y | " | | " |
| | | " | 12 | | | | | | | " | | | | -2 mA | 2.0 V | 0.8 V | " | 4Y | " | | " |
| | $V_{OL}$ | 3007 | 13 | 0.8 V | 0.8 V | 16 mA | | | | " | | | | | | | " | 1Y | | 0.4 | " |
| | | " | 14 | | | | 0.8 V | 0.8 V | 16 mA | " | | | | | | | " | 2Y | | " | " |
| | | " | 15 | | | | | | | " | 16 mA | 0.8 V | 0.8 V | | | | " | 3Y | | " | " |
| | | " | 16 | | | | | | | " | | | | 16 mA | 0.8 V | 0.8 V | " | 4Y | | " | " |
| | $I_{O(off)1}$ | | 17 | 2.0 V | 0.8 V | 2.4 V | | | | " | | | | | | | 5.5 V | 1Y | | 40 | µA |
| | | | 18 | | | | 2.0 V | 0.8 V | 2.4 V | " | | | | | | | " | 2Y | | " | " |
| | | | 19 | | | | | | | " | 2.4 V | 0.8 V | 2.0 V | | | | " | 3Y | | " | " |
| | | | 20 | | | | | | | " | | | | 2.4 V | 0.8 V | 2.0 V | " | 4Y | | " | " |
| | $I_{O(off)2}$ | | 21 | 2.0 V | 2.0 V | 0.4 V | | | | " | | | | | | | " | 1Y | | -40 | µA |
| | | | 22 | | | | 2.0 V | 2.0 V | 0.4 V | " | | | | | | | " | 2Y | | " | " |
| | | | 23 | | | | | | | " | 0.4 V | 2.0 V | 2.0 V | | | | " | 3Y | | " | " |
| | | | 24 | | | | | | | " | | | | 0.4 V | 2.0 V | 2.0 V | " | 4Y | | " | " |
| | $I_{IH1}$ | 3010 | 25 | GND | 5.5 V | | | | | " | | | | | | | " | 1A | | 100 | µA |
| | | " | 26 | 5.5 V | | | | | | " | | | | | | | " | 1C | | " | " |
| | | " | 27 | | | | GND | 5.5 V | | " | | | | | | | " | 2A | | " | " |
| | | " | 28 | | | | 5.5 V | | | " | | | | | | | " | 2C | | " | " |
| | | " | 29 | | | | | | | " | | 5.5 V | GND | | | | " | 3A | | " | " |
| | | " | 30 | | | | | | | " | | | 5.5 V | | | | " | 3C | | " | " |
| | | " | 31 | | | | | | | " | | | | | 5.5 V | GND | " | 4A | | " | " |
| | | " | 32 | | | | | | | " | | | | | | 5.5 V | " | 4C | | " | " |
| | $I_{IH2}$ | " | 33 | 2.4 V | 5.5 V | | | | | " | | | | | | | " | 1A | | 100 | µA |
| | | " | 34 | 5.5 V | | | | | | " | | | | | | | " | 1C | | " | " |
| | | " | 35 | | | | 2.4 V | 5.5 V | | " | | | | | | | " | 2A | | " | " |
| | | " | 36 | | | | 5.5 V | | | " | | | | | | | " | 2C | | " | " |
| | | " | 37 | | | | | | | " | | 5.5 V | 2.4 V | | | | " | 3A | | " | " |
| | | " | 38 | | | | | | | " | | | 5.5 V | | | | " | 3C | | " | " |
| | | " | 39 | | | | | | | " | | | | | 5.5 V | 2.4 V | " | 4A | | " | " |
| | | " | 40 | | | | | | | " | | | | | | 5.5 V | " | 4C | | " | " |
| | $I_{IH3}$ | " | 41 | GND | 2.4 V | | | GND | | " | | GND | | | GND | | " | 1A | | 40 | " |
| | | " | 42 | 2.4 V | | | | | | " | | | | | | | " | 1C | | " | " |
| | | " | 43 | | GND | | GND | 2.4 V | | " | | GND | | | GND | | " | 2A | | " | " |
| | | " | 44 | | | | 2.4 V | | | " | | | | | | | " | 2C | | " | " |
| | | " | 45 | | GND | | | GND | | " | | 2.4 V | GND | | GND | | " | 3A | | " | " |
| | | " | 46 | | | | | | | " | | | 2.4 V | | | | " | 3C | | " | " |
| | | " | 47 | | GND | | | GND | | " | | GND | | | 2.4 V | GND | " | 4A | | " | " |
| | | " | 48 | | | | | | | " | | | | | | 2.4 V | " | 4C | | " | " |

TABLE III. Group A inspection for device type 01 – Continued.
Terminal conditions (pins not designated may be high ≥ 2.0 V, low ≤ 0.8 V, or open).

| Subgroup | Symbol | MIL-STD-883 method | Cases C and D Test no. | 1 1C | 2 1A | 3 1Y | 4 2C | 5 2A | 6 2Y | 7 GND | 8 3Y | 9 3A | 10 3C | 11 4Y | 12 4A | 13 4C | 14 $V_{CC}$ | Measured terminal | Limits Min | Limits Max | Unit |
|---|---|---|---|---|---|---|---|---|---|---|---|---|---|---|---|---|---|---|---|---|---|
| 1 Tc = 25°C | $I_{IL}$ | 3009 | 49 | GND | 0.4 V | | | 4.5 V | | " | | 4.5 V | | | 4.5 V | | 5.5 V | 1A | -0.7 | -1.6 | mA |
| | | " | 50 | 0.4 V | | | | | | " | | | | | | | " | 1C | " | " | " |
| | | " | 51 | | 4.5 V | | GND | 0.4 V | | " | | 4.5 V | | | 4.5 V | | " | 2A | " | " | " |
| | | " | 52 | | | | 0.4 V | | | " | | | | | | | " | 2C | " | " | " |
| | | " | 53 | | 4. 5 V | | | 4.5 V | | " | | 0.4 V | GND | | 4.5 V | | " | 3A | " | " | " |
| | | " | 54 | | | | | | | " | | | 0.4 V | | | | " | 3C | " | " | " |
| | | " | 55 | | 4.5 V | | | 4.5 V | | " | | 4.5 V | | | 0.4 V | GND | " | 4A | " | " | " |
| | | " | 56 | | | | | | | " | | | | | | 0.4 V | " | 4C | " | " | " |
| | $I_{CC}$ | 3005 | 57 | 4.5 V | GND | | 4.5 V | GND | | " | | GND | 4.5 V | | GND | 4.5 V | " | $V_{CC}$ | | 54 | mA |
| | $I_{OS}$ | 3011 | 58 | GND | 4.5 V | GND | | | | " | | | | | | | " | 1Y | -30 | -70 | mA |
| | | " | 59 | | | | GND | 4.5 V | GND | " | | | | | | | " | 2Y | " | " | " |
| | | " | 60 | | | | | | | " | GND | 4.5 V | GND | | | | " | 3Y | " | " | " |
| | | " | 61 | | | | | | | " | | | | GND | 4.5 V | GND | " | 4Y | " | " | " |
| 2 | Same tests, terminal conditions and limits as subgroup 1, except $T_C$ = +125. | | | | | | | | | | | | | | | | | | | | |
| 3 | Same tests, terminal conditions and limits as subgroup 1, except $T_C$ = -55°. | | | | | | | | | | | | | | | | | | | | |
| 9 Tc = 25°C | $t_{PHL}$ | 3003 | 62 | GND | IN | OUT | | | | GND | | | | | | | 5.0 V | 1A to 1Y | 2 | 18 | ns |
| | | Fig. 2 | 63 | | | | GND | IN | OUT | " | | | | | | | " | 2A to 2Y | " | " | " |
| | | | 64 | | | | | | | " | OUT | IN | GND | | | | " | 3A to 3Y | " | " | " |
| | | " | 65 | | | | | | | " | | | | OUT | IN | GND | " | 4A to 4Y | " | " | " |
| | $t_{PLH}$ | " | 66 | GND | IN | OUT | | | | " | | | | | | | 5.0 V | 1A to 1Y | 2 | 13 | " |
| | | " | 67 | | | | GND | IN | OUT | " | | | | | | | " | 2A to 2Y | " | " | " |
| | | " | 68 | | | | | | | " | OUT | IN | GND | | | | " | 3A to 3Y | " | " | " |
| | | " | 69 | | | | | | | " | | | | OUT | IN | GND | " | 4A to 4Y | " | " | " |
| | $t_{PZH}$ | " | 70 | IN | 5.0 V | OUT | | | | " | | | | | | | " | 1C to 1Y | 2 | 17 | " |
| | | " | 71 | | | | IN | 5.0 V | OUT | " | | | | | | | " | 2C to 2Y | " | " | " |
| | | " | 72 | | | | | | | " | OUT | 5.0 V | IN | | | | " | 3C to 3Y | " | " | " |
| | | " | 73 | | | | | | | " | | | | OUT | 5.0 V | IN | " | 4C to 4Y | " | " | " |
| | $t_{PZL}$ | " | 74 | IN | 0.0 V | OUT | | | | " | | | | | | | " | 1C to 1Y | 2 | 25 | " |
| | | " | 75 | | | | IN | 0.0 V | OUT | " | | | | | | | " | 2C to 2Y | " | " | " |
| | | " | 76 | | | | | | | " | OUT | 0.0 V | IN | | | | " | 3C to 3Y | " | " | " |
| | | " | 77 | | | | | | | " | | | | OUT | 0.0 V | IN | " | 4C to 4Y | " | " | " |
| | $t_{PHZ}$ | " | 78 | IN | 5.0 V | OUT | | | | " | | | | | | | " | 1C to 1Y | 2 | 16 | " |
| | | " | 79 | | | | IN | 5.0 V | OUT | " | | | | | | | " | 2C to 2Y | " | " | " |
| | | " | 80 | | | | | | | " | OUT | 5.0 V | IN | | | | " | 3C to 3Y | " | " | " |
| | | " | 81 | | | | | | | " | | | | OUT | 5.0 V | IN | " | 4C to 4Y | " | " | " |
| | $t_{PLZ}$ | " | 82 | IN | 0.0 V | OUT | | | | " | | | | | | | " | 1C to 1Y | 2 | 15 | " |
| | | " | 83 | | | | IN | 0.0 V | OUT | " | | | | | | | " | 2C to 2Y | " | " | " |
| | | " | 84 | | | | | | | " | OUT | 0.0 V | IN | | | | " | 3C to 3Y | " | " | " |
| | | " | 85 | | | | | | | " | | | | OUT | 0.0 V | IN | " | 4C to 4Y | " | " | " |
| 10 Tc = 125°C | $t_{PHL}$ | 3003 | 86 | GND | IN | OUT | | | | GND | | | | | | | 5.0 V | 1A to 1Y | 2 | 22 | " |
| | | Fig. 2 | 87 | | | | GND | IN | OUT | " | | | | | | | " | 2A to 2Y | " | " | " |
| | | | 88 | | | | | | | " | OUT | IN | GND | | | | " | 3A to 3Y | " | " | " |
| | | " | 89 | | | | | | | " | | | | OUT | IN | GND | " | 4A to 4Y | " | " | " |
| | $t_{PLH}$ | " | 90 | GND | IN | OUT | | | | " | | | | | | | 5.0 V | 1A to 1Y | 2 | 16 | " |
| | | " | 91 | | | | GND | IN | OUT | " | | | | | | | " | 2A to 2Y | " | " | " |
| | | " | 92 | | | | | | | " | OUT | IN | GND | | | | " | 3A to 3Y | " | " | " |
| | | " | 93 | | | | | | | " | | | | OUT | IN | GND | " | 4A to 4Y | " | " | " |

TABLE III. Group A inspection for device type 01 – Continued.
Terminal conditions (pins not designated may be high ≥ 2.0 V, low ≤ 0.8 V, or open).

| Subgroup | Symbol | MIL-STD-883 method | Cases C and D Test no. | 1 1C | 2 1A | 3 1Y | 4 2C | 5 2A | 6 2Y | 7 GND | 8 3Y | 9 3A | 10 3C | 11 4Y | 12 4A | 13 4C | 14 $V_{CC}$ | Measured terminal | Limits Min | Limits Max | Unit |
|---|---|---|---|---|---|---|---|---|---|---|---|---|---|---|---|---|---|---|---|---|---|
| 10 Tc = 125°C | $t_{PZH}$ | 3003 | 94 | IN | 5.0 V | OUT | | | | GND | | | | | | | 5.0 V | 1C to 1Y | 2 | 20 | ns |
| | | Fig. 2 | 95 | | | | IN | 5.0 V | OUT | " | | | | | | | " | 2C to 2Y | " | " | " |
| | | " | 96 | | | | | | | " | OUT | 5.0 V | IN | | | | " | 3C to 3Y | " | " | " |
| | | " | 97 | | | | | | | " | | | | OUT | 5.0 V | IN | " | 4C to 4Y | " | " | " |
| | $t_{PZL}$ | " | 98 | IN | 0.0 V | OUT | | | | " | | | | | | | " | 1C to 1Y | 2 | 30 | " |
| | | " | 99 | | | | IN | 0.0 V | OUT | " | | | | | | | " | 2C to 2Y | " | " | " |
| | | " | 100 | | | | | | | " | OUT | 0.0 V | IN | | | | " | 3C to 3Y | " | " | " |
| | | " | 101 | | | | | | | " | | | | OUT | 0.0 V | IN | " | 4C to 4Y | " | " | " |
| | $t_{PHZ}$ | " | 102 | IN | 5.0 V | OUT | | | | " | | | | | | | " | 1C to 1Y | 2 | 21 | " |
| | | " | 103 | | | | IN | 5.0 V | OUT | " | | | | | | | " | 2C to 2Y | " | " | " |
| | | " | 104 | | | | | | | " | OUT | 5.0 V | IN | | | | " | 3C to 3Y | " | " | " |
| | | " | 105 | | | | | | | " | | | | OUT | 5.0 V | IN | " | 4C to 4Y | " | " | " |
| | $t_{PLZ}$ | " | 106 | IN | 0.0 V | OUT | | | | " | | | | | | | " | 1C to 1Y | 2 | 20 | " |
| | | " | 107 | | | | IN | 0.0 V | OUT | " | | | | | | | " | 2C to 2Y | " | " | " |
| | | " | 108 | | | | | | | " | OUT | 0.0 V | IN | | | | " | 3C to 3Y | " | " | " |
| | | " | 109 | | | | | | | " | | | | OUT | 0.0 V | IN | " | 4C to 4Y | " | " | " |
| 11 | Same tests, terminal conditions and limits as subgroup 10, except $T_C$ = -55°C. | | | | | | | | | | | | | | | | | | | | |

TABLE III. Group A inspection for device type 02.
Terminal conditions (pins not designated may be high ≥ 2.0 V, low ≤ 0.8 V, or open).

| Subgroup | Symbol | MIL-STD-883 method | Cases C and D Test no. | 1 1C | 2 1A | 3 1Y | 4 2C | 5 2A | 6 2Y | 7 GND | 8 3Y | 9 3A | 10 3C | 11 4Y | 12 4A | 13 4C | 14 $V_{CC}$ | Measured terminal | Limits Min | Limits Max | Unit |
|---|---|---|---|---|---|---|---|---|---|---|---|---|---|---|---|---|---|---|---|---|---|
| 1 Tc = 25°C | $V_{IC}$ | | 1 | GND | -12 mA | | | | | GND | | | | | | | 4.5 V | 1A | | -1.5 | V |
| | | | 2 | -12 mA | | | | | | " | | | | | | | " | 1C | | " | " |
| | | | 3 | | | | GND | -12 mA | | " | | | | | | | " | 2A | | " | " |
| | | | 4 | | | | -12 mA | | | " | | | | | | | " | 2C | | " | " |
| | | | 5 | | | | | | | " | | -12 mA | GND | | | | " | 3A | | " | " |
| | | | 6 | | | | | | | " | | | -12 mA | | | | " | 3C | | " | " |
| | | | 7 | | | | | | | " | | | | | -12 mA | GND | " | 4A | | " | " |
| | | | 8 | | | | | | | " | | | | | | -12 mA | " | 4C | | " | " |
| | $V_{OH}$ | 3006 | 9 | 2.0 V | 2.0 V | -2 mA | | | | " | | | | | | | " | 1Y | 2.4 | | " |
| | | " | 10 | | | | 2.0 V | 2.0 V | -2 mA | " | | | | | | | " | 2Y | " | | " |
| | | " | 11 | | | | | | | " | -2 mA | 2.0 V | 2.0 V | | | | " | 3Y | " | | " |
| | | " | 12 | | | | | | | " | | | | -2 mA | 2.0 V | 2.0 V | " | 4Y | " | | " |
| | $V_{OL}$ | 3007 | 13 | 2.0 V | 0.8 V | 16 mA | | | | " | | | | | | | " | 1Y | | 0.4 | " |
| | | " | 14 | | | | 2.0 V | 0.8 V | 16 mA | " | | | | | | | " | 2Y | | " | " |
| | | " | 15 | | | | | | | " | 16 mA | 0.8 V | 2.0 V | | | | " | 3Y | | " | " |
| | | " | 16 | | | | | | | " | | | | 16 mA | 0.8 V | 2.0 V | " | 4Y | | " | " |
| | $I_{O(off)1}$ | | 17 | 0.8 V | 0.8 V | 2.4 V | | | | " | | | | | | | 5.5 V | 1Y | | 40 | μA |
| | | | 18 | | | | 0.8 V | 0.8 V | 2.4 V | " | | | | | | | " | 2Y | | " | " |
| | | | 19 | | | | | | | " | 2.4 V | 0.8 V | 0.8 V | | | | " | 3Y | | " | " |
| | | | 20 | | | | | | | " | | | | 2.4 V | 0.8 V | 0.8 V | " | 4Y | | " | " |
| | $I_{O(off)2}$ | | 21 | 0.8 V | 2.0 V | 0.4 V | | | | " | | | | | | | " | 1Y | | -40 | μA |
| | | | 22 | | | | 0.8 V | 2.0 V | 0.4 V | " | | | | | | | " | 2Y | | " | " |
| | | | 23 | | | | | | | " | 0.4 V | 2.0 V | 0.8 V | | | | " | 3Y | | " | " |
| | | | 24 | | | | | | | " | | | | 0.4 V | 2.0 V | 0.8 V | " | 4Y | | " | " |
| | $I_{IH1}$ | 3010 | 25 | 5.5 V | 5.5 V | | | | | " | | | | | | | " | 1A | | 100 | μA |
| | | " | 26 | 5.5 V | | | | | | " | | | | | | | " | 1C | | " | " |
| | | " | 27 | | | | 5.5 V | 5.5 V | | " | | | | | | | " | 2A | | " | " |
| | | " | 28 | | | | 5.5 V | | | " | | | | | | | " | 2C | | " | " |
| | | " | 29 | | | | | | | " | | 5.5 V | 5.5 V | | | | " | 3A | | " | " |
| | | " | 30 | | | | | | | " | | | 5.5 V | | | | " | 3C | | " | " |
| | | " | 31 | | | | | | | " | | | | | 5.5 V | 5.5 V | " | 4A | | " | " |
| | | " | 32 | | | | | | | " | | | | | | 5.5 V | " | 4C | | " | " |
| | $I_{IH2}$ | " | 33 | GND | 5.5 V | | | | | " | | | | | | | " | 1A | | 100 | μA |
| | | " | 34 | 5.5 V | | | | | | " | | | | | | | " | 1C | | " | " |
| | | " | 35 | | | | GND | 5.5 V | | " | | | | | | | " | 2A | | " | " |
| | | " | 36 | | | | 5.5 V | | | " | | | | | | | " | 2C | | " | " |
| | | " | 37 | | | | | | | " | | 5.5 V | GND | | | | " | 3A | | " | " |
| | | " | 38 | | | | | | | " | | | 5.5 V | | | | " | 3C | | " | " |
| | | " | 39 | | | | | | | " | | | | | 5.5 V | GND | " | 4A | | " | " |
| | | " | 40 | | | | | | | " | | | | | | 5.5 V | " | 4C | | " | " |
| | $I_{IH3}$ | " | 41 | 2.4 V | 2.4 V | | | GND | | " | | GND | | | GND | | " | 1A | | 40 | " |
| | | " | 42 | 2.4 V | | | | | | " | | | | | | | " | 1C | | " | " |
| | | " | 43 | | GND | | 2.4 V | 2.4 V | | " | | GND | | | GND | | " | 2A | | " | " |
| | | " | 44 | | | | 2.4 V | | | " | | | | | | | " | 2C | | " | " |
| | | " | 45 | | GND | | | GND | | " | | 2.4 V | 2.4 V | | GND | | " | 3A | | " | " |
| | | " | 46 | | | | | | | " | | | 2.4 V | | | | " | 3C | | " | " |
| | | " | 47 | | GND | | | GND | | " | | GND | | | 2.4 V | 2.4 V | " | 4A | | " | " |
| | | " | 48 | | | | | | | " | | | | | | 2.4 V | " | 4C | | " | " |

TABLE III. Group A inspection for device type 02 – Continued.
Terminal conditions (pins not designated may be high ≥ 2.0 V, low ≤ 0.8 V, or open).

| Subgroup | Symbol | MIL-STD-883 method | Cases C and D Test no. | 1 1C | 2 1A | 3 1Y | 4 2C | 5 2A | 6 2Y | 7 GND | 8 3Y | 9 3A | 10 3C | 11 4Y | 12 4A | 13 4C | 14 $V_{CC}$ | Measured terminal | Limits Min | Limits Max | Unit |
|---|---|---|---|---|---|---|---|---|---|---|---|---|---|---|---|---|---|---|---|---|---|
| 1 Tc = 25°C | $I_{IL}$ | 3009 | 49 | 2.4 V | 0.4 V | | | 4.5 V | | " | | 4.5 V | | | 4.5 V | | 5.5 V | 1A | -0.7 | -1.6 | mA |
| | | " | 50 | 0.4 V | | | | | | " | | | | | | | " | 1C | " | " | " |
| | | " | 51 | | 4.5 V | | 2.4 V | 0.4 V | | " | | 4.5 V | | | 4.5 V | | " | 2A | " | " | " |
| | | " | 52 | | | | 0.4 V | | | " | | | | | | | " | 2C | " | " | " |
| | | " | 53 | | 4. 5 V | | | 4.5 V | | " | | 0.4 V | 2.4 V | | 4.5 V | | " | 3A | " | " | " |
| | | " | 54 | | | | | | | " | | | 0.4 V | | | | " | 3C | " | " | " |
| | | " | 55 | | 4.5 V | | | 4.5 V | | " | | 4.5 V | | | 0.4 V | 2.4 V | " | 4A | " | " | " |
| | | " | 56 | | | | | | | " | | | | | | 0.4 V | " | 4C | " | " | " |
| | $I_{CC}$ | 3005 | 57 | GND | GND | | GND | GND | | " | | GND | GND | | GND | GND | " | $V_{CC}$ | | 62 | mA |
| | $I_{OS}$ | 3011 | 58 | 2.4 V | 4.5 V | GND | | | | " | | | | | | | " | 1Y | -30 | -70 | mA |
| | | " | 59 | | | | 2.4 V | 4.5 V | GND | " | | | | | | | " | 2Y | " | " | " |
| | | " | 60 | | | | | | | " | GND | 4.5 V | 2.4 V | | | | " | 3Y | " | " | " |
| | | " | 61 | | | | | | | " | | | | GND | 4.5 V | 2.4 V | " | 4Y | " | " | " |
| 2 | Same tests, terminal conditions and limits as subgroup 1, except $T_C$ = +125. | | | | | | | | | | | | | | | | | | | | |
| 3 | Same tests, terminal conditions and limits as subgroup 1, except $T_C$ = -55°. | | | | | | | | | | | | | | | | | | | | |
| 9 Tc = 25°C | $t_{PHL}$ | 3003 | 62 | 5.0 V | IN | OUT | | | | GND | | | | | | | 5.0 V | 1A to 1Y | 2 | 18 | ns |
| | | Fig. 2 | 63 | | | | 5.0 V | IN | OUT | " | | | | | | | " | 2A to 2Y | " | " | " |
| | | | 64 | | | | | | | " | OUT | IN | 5.0 V | | | | " | 3A to 3Y | " | " | " |
| | | " | 65 | | | | | | | " | | | | OUT | IN | 5.0 V | " | 4A to 4Y | " | " | " |
| | $t_{PLH}$ | " | 66 | 5.0 V | IN | OUT | | | | " | | | | | | | 5.0 V | 1A to 1Y | 2 | 13 | " |
| | | " | 67 | | | | 5.0 V | IN | OUT | " | | | | | | | " | 2A to 2Y | " | " | " |
| | | " | 68 | | | | | | | " | OUT | IN | 5.0 V | | | | " | 3A to 3Y | " | " | " |
| | | " | 69 | | | | | | | " | | | | OUT | IN | 5.0 V | " | 4A to 4Y | " | " | " |
| | $t_{PZH}$ | " | 70 | IN | 5.0 V | OUT | | | | " | | | | | | | " | 1C to 1Y | 2 | 18 | " |
| | | " | 71 | | | | IN | 5.0 V | OUT | " | | | | | | | " | 2C to 2Y | " | " | " |
| | | " | 72 | | | | | | | " | OUT | 5.0 V | IN | | | | " | 3C to 3Y | " | " | " |
| | | " | 73 | | | | | | | " | | | | OUT | 5.0 V | IN | " | 4C to 4Y | " | " | " |
| | $t_{PZL}$ | " | 74 | IN | 0.0 V | OUT | | | | " | | | | | | | " | 1C to 1Y | 2 | 25 | " |
| | | " | 75 | | | | IN | 0.0 V | OUT | " | | | | | | | " | 2C to 2Y | " | " | " |
| | | " | 76 | | | | | | | " | OUT | 0.0 V | IN | | | | " | 3C to 3Y | " | " | " |
| | | " | 77 | | | | | | | " | | | | OUT | 0.0 V | IN | " | 4C to 4Y | " | " | " |
| | $t_{PHZ}$ | " | 78 | IN | 5.0 V | OUT | | | | " | | | | | | | " | 1C to 1Y | 2 | 24 | " |
| | | " | 79 | | | | IN | 5.0 V | OUT | " | | | | | | | " | 2C to 2Y | " | " | " |
| | | " | 80 | | | | | | | " | OUT | 5.0 V | IN | | | | " | 3C to 3Y | " | " | " |
| | | " | 81 | | | | | | | " | | | | OUT | 5.0 V | IN | " | 4C to 4Y | " | " | " |
| | $t_{PLZ}$ | " | 82 | IN | 0.0 V | OUT | | | | " | | | | | | | " | 1C to 1Y | 2 | 21 | " |
| | | " | 83 | | | | IN | 0.0 V | OUT | " | | | | | | | " | 2C to 2Y | " | " | " |
| | | " | 84 | | | | | | | " | OUT | 0.0 V | IN | | | | " | 3C to 3Y | " | " | " |
| | | " | 85 | | | | | | | " | | | | OUT | 0.0 V | IN | " | 4C to 4Y | " | " | " |
| 10 Tc = 125°C | $t_{PHL}$ | 3003 | 86 | 5.0 V | IN | OUT | | | | GND | | | | | | | 5.0 V | 1A to 1Y | 2 | 22 | " |
| | | Fig. 2 | 87 | | | | 5.0 V | IN | OUT | " | | | | | | | " | 2A to 2Y | " | " | " |
| | | | 88 | | | | | | | " | OUT | IN | 5.0 V | | | | " | 3A to 3Y | " | " | " |
| | | " | 89 | | | | | | | " | | | | OUT | IN | 5.0 V | " | 4A to 4Y | " | " | " |
| | $t_{PLH}$ | " | 90 | 5.0 V | IN | OUT | | | | " | | | | | | | " | 1A to 1Y | 2 | 16 | " |
| | | " | 91 | | | | 5.0 V | IN | OUT | " | | | | | | | " | 2A to 2Y | " | " | " |
| | | " | 92 | | | | | | | " | OUT | IN | 5.0 V | | | | " | 3A to 3Y | " | " | " |
| | | " | 93 | | | | | | | " | | | | OUT | IN | 5.0 V | " | 4A to 4Y | " | " | " |

TABLE III. Group A inspection for device type 02 – Continued.
Terminal conditions (pins not designated may be high ≥ 2.0 V, low ≤ 0.8 V, or open).

| Subgroup | Symbol | MIL-STD-883 method | Cases C and D Test no. | 1 1C | 2 1A | 3 1Y | 4 2C | 5 2A | 6 2Y | 7 GND | 8 3Y | 9 3A | 10 3C | 11 4Y | 12 4A | 13 4C | 14 $V_{CC}$ | Measured terminal | Limits Min | Limits Max | Unit |
|---|---|---|---|---|---|---|---|---|---|---|---|---|---|---|---|---|---|---|---|---|---|
| 10 Tc = 125°C | $t_{PZH}$ | 3003 Fig. 2 | 94 | IN | 5.0 V | OUT | | | | GND | | | | | | | 5.0 V | 1C to 1Y | 2 | 22 | ns |
| | | " | 95 | | | | IN | 5.0 V | OUT | " | | | | | | | " | 2C to 2Y | " | " | " |
| | | " | 96 | | | | | | | " | OUT | 5.0 V | IN | | | | " | 3C to 3Y | " | " | " |
| | | " | 97 | | | | | | | " | | | | OUT | 5.0 V | IN | " | 4C to 4Y | " | " | " |
| | $t_{PZL}$ | " | 98 | IN | 0.0 V | OUT | | | | " | | | | | | | " | 1C to 1Y | 2 | 30 | " |
| | | " | 99 | | | | IN | 0.0 V | OUT | " | | | | | | | " | 2C to 2Y | " | " | " |
| | | " | 100 | | | | | | | " | OUT | 0.0 V | IN | | | | " | 3C to 3Y | " | " | " |
| | | " | 101 | | | | | | | " | | | | OUT | 0.0 V | IN | " | 4C to 4Y | " | " | " |
| | $t_{PHZ}$ | " | 102 | IN | 5.0 V | OUT | | | | " | | | | | | | " | 1C to 1Y | 2 | 31 | " |
| | | " | 103 | | | | IN | 5.0 V | OUT | " | | | | | | | " | 2C to 2Y | " | " | " |
| | | " | 104 | | | | | | | " | OUT | 5.0 V | IN | | | | " | 3C to 3Y | " | " | " |
| | | " | 105 | | | | | | | " | | | | OUT | 5.0 V | IN | " | 4C to 4Y | " | " | " |
| | $t_{PLZ}$ | " | 106 | IN | 0.0 V | OUT | | | | " | | | | | | | " | 1C to 1Y | 2 | 27 | " |
| | | " | 107 | | | | IN | 0.0 V | OUT | " | | | | | | | " | 2C to 2Y | " | " | " |
| | | " | 108 | | | | | | | " | OUT | 0.0 V | IN | | | | " | 3C to 3Y | " | " | " |
| | | " | 109 | | | | | | | " | | | | OUT | 0.0 V | IN | " | 4C to 4Y | " | " | " |
| 11 | Same tests, terminal conditions and limits as subgroup 10, except $T_C$ = -55°C. | | | | | | | | | | | | | | | | | | | | |

## 5. PACKAGING

5.1 Packaging requirements. For acquisition purposes, the packaging requirements shall be as specified in the contract or order (see 6.2). When packaging of materiel is to be performed by DoD or in-house contractor personnel, these personnel need to contact the responsible packaging activity to ascertain packaging requirements. Packaging requirements are maintained by the Inventory Control Point's packaging activity within the Military Service or Defense Agency, or within the military service's system command. Packaging data retrieval is available from the managing Military Department's or Defense Agency's automated packaging files, CD-ROM products, or by contacting the responsible packaging activity.

## 6. NOTES

(This section contains information of a general or explanatory nature that may be helpful, but is not mandatory.)

6.1 Intended use. Microcircuits conforming to this specification are intended for original equipment design applications and logistic support of existing equipment.

6.2 Acquisition requirements. Acquisition documents should specify the following:

a. Title, number, and date of the specification.

b. Pin and compliance identifier, if applicable (see 1.2).

c. Requirements for delivery of one copy of the conformance inspection data pertinent to the device inspection lot to be supplied with each shipment by the device manufacturer, if applicable.

d. Requirements for certificate of compliance, if applicable.

e. Requirements for notification of change of product or process to contracting activity in addition to notification to the qualifying activity, if applicable.

f. Requirements for failure analysis (including required test condition of method 5003 of MIL-STD-883), corrective action, and reporting of results, if applicable.

g. Requirements for product assurance options.

h. Requirements for special carriers, lead lengths, or lead forming, if applicable. These requirements should not affect the part number. Unless otherwise specified, these requirements will not apply to direct purchase by or direct shipment to the Government.

i. Requirements for "JAN" marking.

j. Packaging requirements (see 5.1).

6.3 Superseding information. The requirements of MIL-M-38510 have been superseded to take advantage of the available Qualified Manufacturer Listing (QML) system provided by MIL-PRF-38535. Previous references to MIL-M-38510 in this document have been replaced by appropriate references to MIL-PRF-38535. All technical requirements now consist of this specification and MIL-PRF-38535. The MIL-M-38510 specification sheet number and PIN have been retained to avoid adversely impacting existing government logistics systems and contractor's parts lists.

6.4 Qualification. With respect to products requiring qualification, awards will be made only for products which are, at the time of award of contract, qualified for inclusion in Qualified Manufacturers List QML-38535 whether or not such products have actually been so listed by that date. The attention of the contractors is called to these requirements, and manufacturers are urged to arrange to have the products that they propose to offer to the Federal Government tested for qualification in order that they may be eligible to be awarded contracts or purchase orders for the products covered by this specification. Information pertaining to qualification of products may be obtained from DSCC-VQ, 3990 E. Broad Street, Columbus, Ohio 43128-3990.

6.5 Abbreviations, symbols, and definitions. The abbreviations, symbols, and definitions used herein are defined in MIL-PRF-38535, MIL-HDBK-1331, and as follows:

GND ..... Ground zero voltage potential.
$I_{IN}$ ..... Current flowing into an input terminal.
$V_{IN}$ ..... Voltage level at an input terminal.

6.6 Logistic support. Lead materials and finishes (see 3.4) are interchangeable. Unless otherwise specified, microcircuits acquired for Government logistic support will be acquired to device class B (see 1.2.2), lead material and finish A (see 3.4). Longer length leads and lead forming should not affect the part number.

6.7 Substitutability. The cross-reference information below is presented for the convenience of users. Microcircuits covered by this specification will functionally replace the listed generic-industry type. Generic-industry microcircuit types may not have equivalent operational performance characteristics across military temperature ranges or reliability factors equivalent to MIL-M-38510 device types and may have slight physical variations in relation to case size. The presence of this information should not be deemed as permitting substitution of generic-industry types for MIL-M-38510 types or as a waiver of any of the provisions of MIL-PRF-38535.

| Military device type | Generic-industry type |
|---|---|
| 01 | 54125 |
| 02 | 54126 |

6.8 Manufacturers' designation. Manufacturers' circuits, which form a part of this specification, are designated with an "X" as shown in table IV herein.

TABLE IV. Manufacturer's designator.

| Device types | Circuits | |
|---|---|---|
| | A | B |
| | Signetics Corp. | National Semiconductor |
| 01 | X | |
| 02 | X | X |

6.9 Changes from previous issue. Marginal notations are not used in this revision to identify changes with respect to the previous issue due to the extensiveness of the changes.

Custodians:
Army - CR
Navy - EC
Air Force - 11
DLA - CC

Preparing activity:
DLA - CC

(Project 5962-2098)

Review activities:
Army - MI, SM
Navy - AS, CG, MC, SH, TD
Air Force - 03, 19, 99

NOTE: The activities listed above were interested in this document as of the date of this document. Since organizations and responsibilities can change, you should verify the currency of the information above using the ASSIST Online database at http://assist.daps.dla.mil.