INCH-POUND
MIL-M-38510/150D
7 February 2005
SUPERSEDING
MIL-M-38510/150C
7 November 1985

MILITARY SPECIFICATION

MICROCIRCUITS, DIGITAL, BIPOLAR, TTL, MAGNITUDE COMPARATORS, MONOLITHIC SILICON

Inactive for new design after 8 July 1997.

This specification is approved for use by all Departments and Agencies of the Department of Defense.

The requirements for acquiring the product herein shall consist of this specification sheet and MIL-PRF-38535.

1. SCOPE

1.1 Scope. This specification covers the detail requirements for monolithic silicon, Advanced Low Power Scottky TTL, magnitude comparator microcircuits. Two product assurance classes and a choice of case outlines and lead finishes are provided for each type and are reflected in the complete part number. For this product, the requirements of MIL-M-38510 have been superseded by MIL-PRF-38535, (see 6.3).

1.2 Part or identifying number (PIN). The PIN is in accordance with MIL-PRF-38535, and as specified herein.

1.2.1 Device types. The device types are as follows:

Device type	Circuit
01	4-bit comparator
02	5-bit comparator

1.2.2 Device class. The device class is the product assurance level as defined in MIL-PRF-38535.

1.2.3 Case outlines. The case outlines are as designated in MIL-STD-1835 and as follows:

Outline letter	Descriptive designator	Terminals	Package style
E	GDIP1-T16 or CDIP2-T16	16	Dual-in-line
F	GDFP2-F16 or CDFP3-F16	16	Flat pack

Comments, suggestions, or questions on this document should be addressed to: Commander, Defense Supply Center Columbus, ATTN: DSCC-VAS, 3990 East Broad St., Columbus, OH 43218-3990, or emailed to bipolar@dscc.dla.mil. Since contact information can change, you may want to verify the currency of this address information using the ASSIST Online database at http://assist.daps.dla.mil.

AMSC N/A FSC 5962

1.3 Absolute maximum ratings.

Supply voltage range	-0.5 V dc to +7.0 V dc
Input voltage range	-1.5 V dc at -12 mA to +5.5 V dc
Storage temperature range	-65°C to +150°C
Maximum power dissipation (P_D):	
Device types 01 and 02	485 mW 1/
Lead temperature (soldering, 10 seconds)	+300°C
Thermal resistance, junction to case (θ_{JC}):	
Cases E and F	See MIL-STD-1835
Junction temperature (T_J)	+175°C 2/

1.4 Recommended operating conditions.

Supply voltage (V_{CC})	4.5 V dc minimum to 5.5 V dc maximum
Minimum high level input voltage (V_{IH})	2.0 V dc
Maximum low level input voltage (V_{IL})	0.8 V dc
Normalized fanout (each output)	10 maximum
Case operating temperature range (T_C)	-55°C to +125°C

2. APPLICABLE DOCUMENTS

2.1 General. The documents listed in this section are specified in sections 3, 4, or 5 of this specification. This section does not include documents cited in other sections of this specification or recommended for additional information or as examples. While every effort has been made to ensure the completeness of this list, document users are cautioned that they must meet all specified requirements of documents cited in sections 3, 4, or 5 of this specification, whether or not they are listed.

2.2 Government documents.

2.2.1 Specifications, standards, and handbooks. The following specifications and standards form a part of this specification to the extent specified herein. Unless otherwise specified, the issues of these documents are those cited in the solicitation or contract.

DEPARTMENT OF DEFENSE SPECIFICATION

MIL-PRF-38535 - Integrated Circuits (Microcircuits) Manufacturing, General Specification for.

DEPARTMENT OF DEFENSE STANDARDS

MIL-STD-883 - Test Method Standard for Microelectronics.
MIL-STD-1835 - Interface Standard Electronic Component Case Outlines

(Copies of these documents are available online at http://assist.daps.dla.mil/quicksearch/ or http://assist.daps.dla.mil or from the Standardization Document Order Desk, 700 Robbins Avenue, Building 4D, Philadelphia, PA 19111-5094.)

2.3 Order of precedence. In the event of a conflict between the text of this specification and the references cited herein, the text of this document takes precedence. Nothing in this document, however, supersedes applicable laws and regulations unless a specific exemption has been obtained.

1/ Must withstand the added P_D due to short-circuit test (e.g., I_{OS}).
2/ Maximum junction temperature shall not be exceeded except for allowable short duration burn-in screening conditions in accordance with MIL-PRF-38535.

3. REQUIREMENTS

3.1 Qualification. Microcircuits furnished under this specification shall be products that are manufactured by a manufacturer authorized by the qualifying activity for listing on the applicable qualified manufacturers list before contract award (see 4.3 and 6.4).

3.2 Item requirements. The individual item requirements shall be in accordance with MIL-PRF-38535 and as specified herein or as modified in the device manufacturer's Quality Management (QM) plan. The modification in the QM plan shall not affect the form, fit, or function as described herein.

3.3 Design, construction, and physical dimensions. The design, construction, and physical dimensions shall be as specified in MIL-PRF-38535 and herein.

3.3.1 Terminal connections. The terminal connections shall be as specified on figure 1.

3.3.2 Truth tables. The truth tables shall be as specified on figure 2.

3.3.3 Logic diagrams. The logic diagrams shall be specified on figure 3.

3.3.4 Schematic circuits. The schematic circuits shall be maintained by the manufacturer and made available to the qualifying activity and the preparing activity upon request.

3.3.5 Case outlines. The case outlines shall be as specified in 1.2.3.

3.4 Lead material and finish. The lead material and finish shall be in accordance with MIL-PRF-38535 (see 6.6).

3.5 Electrical performance characteristics. The electrical performance characteristics are as specified in table I, and apply over the full recommended case operating temperature range, unless otherwise specified.

3.6 Electrical test requirements. The electrical test requirements for each device class shall be the subgroups specified in table II. The electrical tests for each subgroup are described in table III.

3.7 Marking. Marking shall be in accordance with MIL-PRF-38535.

3.8 Microcircuit group assignment. The devices covered by this specification shall be in microcircuit group number 5 (see MIL-PRF-38535, appendix A).

4. VERIFICATION

`

4.1 Sampling and inspection. Sampling and inspection procedures shall be in accordance with MIL-PRF-38535 or as modified in the device manufacturer's Quality Management (QM) plan. The modification in the QM plan shall not effect the form, fit, or function as described herein.

4.2 Screening. Screening shall be in accordance with, MIL-PRF-38535 and shall be conducted on all devices prior to qualification and quality conformance inspection. The following additional criteria shall apply:

a. The burn-in test duration, test condition, and test temperature, or approved alternatives shall be as specified in the device manufacturer's QM plan in accordance with MIL-PRF-38535. The burn-in test circuit shall be maintained under document control by the device manufacturer's Technology Review Board (TRB) in accordance with MIL-PRF-38535 and shall be made available to the acquiring or preparing activity upon request. The test circuit shall specify the inputs, outputs, biases, and power dissipation, as applicable, in accordance with the intent specified in test method 1015 of MIL-STD-883.

b. Interim and final electrical test parameters shall be as specified in table II, except interim electrical parameters test prior to burn-in is optional at the discretion of the manufacturer.

c. Additional screening for space level product shall be as specified in MIL-PRF-38535.

4.3 Qualification inspection. Qualification inspection shall be in accordance with MIL-PRF-38535.

TABLE I. Electrical performance characteristics.

Test	Symbol	Conditions $-55°C \le T_C \le +125°C$	Device type	Limits Min	Limits Max	Unit
High level output voltage	V_{OH}	V_{CC} = 4.5 V, V_{IH} = 2.0 V, V_{IL} = 0.8 V, I_{OH} = -400 μA	01	2.4		V
		V_{CC} = 4.5 V, V_{IH} = 2.0 V, V_{IL} = 0.8 V, I_{OH} = -800 μA	02	2.4		
Low level output voltage	V_{OL}	V_{CC} = 4.5 V, V_{IH} = 2.0 V, V_{IL} = 0.8 V, I_{OL} = 16 mA	All		0.4	V
Input clamp voltage	V_{IC}	V_{CC} = 4.5 V, I_{IN} = -12 mA, T_C = +25°C	All		-1.5	V
High level input current (All inputs except A < B or A > B inputs)	I_{IH1}	V_{CC} = 5.5 V, V_{IN} = 2.4 V	01	0	120	μA
			02	0	80	
High level input current (all other inputs)	I_{IH2}	V_{CC} = 5.5 V, V_{IN} = 5.5 V	01	0	300	μA
			02	0	200	
High level input current (A < B, A > B inputs)	I_{IH3}	V_{CC} = 5.5 V, V_{IN} = 2.4 V	01	0	40	μA
Low level input current (all other inputs)	I_{IL1}	V_{CC} = 5.5 V, V_{IN} = 0.4 V	01	-2.0	-4.3	mA
			02	-1.4	-3.2	
Low level input current (A < B, A > B inputs)	I_{IL2}	V_{CC} = 5.5 V, V_{IN} = 0.4 V	01	-0.7	-1.6	mA
Short circuit output current	I_{OS}	V_{CC} = 5.5 V 1/	01	-20	-55	mA
			02	-20	-70	
Supply current	I_{CC}	V_{CC} = 5.5 V 2/	01		88	mA
		V_{CC} = 5.5 V	02		81	
Propagation delay from any A or B input to A < B or A > B outputs	t_{PLH1}	C_L = 50 pF , 3/ 4/ 3 gate levels, R_L = 400 Ω	01	2	38	ns
Propagation delay from any A or B input to A > B output	t_{PLH2}	C_L = 50 pF, 3/ 4/ 3 gate levels, R_L = 400 Ω	01	2	49	ns
Propagation delay from A < B or A = B input to A > B output	t_{PLH3}	C_L = 50 pF, 3/ 4/ 2 gate levels, R_L = 400 Ω	01	2	19	ns
Propagation delay from A = B input to A = B output	t_{PLH4}	C_L = 50 pF , 3/ 4/ 1 gate level, R_L = 400 Ω	01	2	30	ns

See footnotes at end of table.

TABLE I. Electrical performance characteristics - Continued.

Test	Symbol	Conditions $-55°C \le T_C \le +125°C$	Device type	Limits		Unit
				Min	Max	
Propagation delay from A > B or A = B input to A < B output	t_{PLH5}	C_L = 50 pF, 3/ 4/ 2 gate levels, R_L = 400 Ω	01	2	19	ns
Propagation delay from any A or B input to A > B or A < B output	t_{PHL1}	C_L = 50 pF, 3/ 4/ 3 gate levels, R_L = 400 Ω	01	2	43	ns
Propagation delay from any A or B input to A = B output	t_{PHL2}	C_L = 50 pF, 3/ 4/ 3 gate levels, R_L = 400 Ω	01	2	43	ns
Propagation delay from A < B or A = B inputs to A > B output	t_{PHL3}	C_L = 50 pF, 3/ 4/ 2 gate levels, R_L = 400 Ω	01	2	26	ns
Propagation delay from A = B input to A = B output	t_{PHL4}	C_L = 50 pF, 3/ 4/ 1 gate levels, R_L = 400 Ω	01	2	26	ns
Propagation delay from A > B or A = B input to A < B output	t_{PHL5}	C_L = 50 pF, 3/ 4/ 2 gate levels, R_L = 400 Ω	01	2	26	ns
Propagation delay from E to A = B	t_{PLH1}	V_{CC} = 5.0 V, R_L = 390 Ω, C_L = 50 pF	02	3	22	ns
Propagation delay from E to A < B	t_{PLH2}	V_{CC} = 5.0 V, R_L = 390 Ω, C_L = 50 pF	02	3	25	ns
Propagation delay from E to A > B	t_{PLH3}	V_{CC} = 5.0 V, R_L = 390 Ω, C_L = 50 pF	02	3	25	ns
Propagation delay from A to A = B	t_{PLH4}	V_{CC} = 5.0 V, R_L = 390 Ω, C_L = 50 pF	02	9	55	ns
Propagation delay from B to A = B	t_{PLH5}	V_{CC} = 5.0 V, R_L = 390 Ω, C_L = 50 pF	02	9	55	ns
Propagation delay from A to A < B	t_{PLH6}	V_{CC} = 5.0 V, R_L = 390 Ω, C_L = 50 pF	02	6	39	ns
Propagation delay from B to A < B	t_{PLH7}	V_{CC} = 5.0 V, R_L = 390 Ω, C_L = 50 pF	02	3	30	ns

See footnotes at end of table.

TABLE I. Electrical performance characteristics - Continued.

Test	Symbol	Conditions $-55°C \le T_C \le +125°C$	Device type	Limits		Unit
				Min	Max	
Propagation delay from A to A > B	t_{PLH8}	V_{CC} = 5.0 V, R_L = 390 Ω, C_L = 50 pF	02	3	30	ns
Propagation delay from B to A > B	t_{PLH9}	V_{CC} = 5.0 V, R_L = 390 Ω, C_L = 50 pF	02	6	39	ns
Propagation delay from E to A = B	t_{PHL1}	V_{CC} = 5.0 V, R_L = 390 Ω, C_L = 50 pF	02	3	19	ns
Propagation delay from E to A < B	t_{PHL2}	V_{CC} = 5.0 V, R_L = 390 Ω, C_L = 50 pF	02	3	21	ns
Propagation delay from E to A > B	t_{PHL3}	V_{CC} = 5.0 V, R_L = 390 Ω, C_L = 50 pF	02	3	21	ns
Propagation delay from A to A = B	t_{PHL4}	V_{CC} = 5.0 V, R_L = 390 Ω, C_L = 50 pF	02	9	55	ns
Propagation delay from B to A = B	t_{PHL5}	V_{CC} = 5.0 V, R_L = 390 Ω, C_L = 50 pF	02	9	55	ns
Propagation delay time from A to A < B	t_{PHL6}	V_{CC} = 5.0 V, R_L = 390 Ω, C_L = 50 pF	02	6	32	ns
Propagation delay time from B to A < B	t_{PHL7}	V_{CC} = 5.0 V, R_L = 390 Ω, C_L = 50 pF	02	3	26	ns
Propagation delay time from A to A > B	t_{PHL8}	V_{CC} = 5.0 V, R_L = 390 Ω, C_L = 50 pF	02	3	25	ns
Propagation delay time from B to A > B	t_{PHL9}	V_{CC} = 5.0 V, R_L = 390 Ω, C_L = 50 pF	02	6	35	ns

1/ Not more than one output should be shorted at one time.

2/ I_{CC} is measured with outputs open, A = B grounded, and all other inputs at 4.5 V.

3/ The longest gate level propagation delay paths are not tested (5 gate levels); however, they can be calculated: $t = t_{P1}$ maximum + t_{P2} maximum - t_{P4} minimum.

4/ Gate level references are made with respect to the logic diagram.

TABLE II. Electrical test requirements.

MIL-PRF-38535 test requirements	Subgroups (see table III)	
	Class S devices	Class B devices
Interim electrical parameters	1	1
Final electrical test parameters	1*, 2, 3, 7, 9, 10, 11	1*, 2, 3, 7, 9
Group A test requirements	1, 2, 3, 7, 8, 9, 10, 11	1, 2, 3, 7, 9, 10, 11
Group B electrical test parameters when using method 5005 QCI option	1, 2, 3, 7, 8, 9, 10, 11	N/A
Group C end-point electrical parameters	1, 2, 3, 7, 8, 9, 10, 11	1, 2, 3
Group D end-point electrical parameters	1, 2, 3	1, 2, 3

* PDA applies to subgroup 1.

4.4 Technology conformance inspection (TCI). Technology conformance inspection shall be in accordance with MIL-PRF-38535 and herein for groups A, B, C, and D inspections (see 4.4.1 through 4.4.4).

4.4.1 Group A inspection. Group A inspection shall be in accordance with table III of MIL-PRF-38535 and as follows:

a. Tests shall be as specified in table II herein.

b. Subgroups 4, 5, and 6 shall be omitted.

4.4.2 Group B inspection. Group B inspection shall be in accordance with table II MIL-PRF-38535.

4.4.3 Group C inspection. Group C inspection shall be in accordance with table IV of MIL-PRF-38535 and as follows:

a. End-point electrical parameters shall be as specified in table II herein.

b. The steady-state life test duration, test condition, and test temperature, or approved alternatives shall be as specified in the device manufacturer's QM plan in accordance with MIL-PRF-38535. The burn-in test circuit shall be maintained under document control by the device manufacturer's Technology Review Board (TRB) in accordance with MIL-PRF-38535 and shall be made available to the acquiring or preparing activity upon request. The test circuit shall specify the inputs, outputs, biases, and power dissipation, as applicable, in accordance with the intent specified in test method 1005 of MIL-STD-883.

4.4.4 Group D inspection. Group D inspection shall be in accordance with table V of MIL-PRF-38535. End-point electrical parameters shall be as specified in table II herein.

4.5 Methods of inspection. Methods of inspection shall be specified and as follows:

4.5.1 Voltage and current. All voltages given are referenced to the microcircuit ground terminal. Currents given are conventional and positive when flowing into the referenced terminal.

Device type	01		02	
Case outlines	E and F		E and F	
Terminal number	Terminal symbol		Terminal symbol	
1	B_3	DATA INPUT	$\overline{E}$	
2	A < B	CASCADING INPUTS	A < B	OUTPUT
3	A = B		B_0	DATA INPUTS
4	A > B		B_1	
5	A > B	OUTPUTS	B_2	
6	A = B		B_3	
7	A < B		B_4	
8	GND		GND	
9	B_0	DATA INPUTS	A_4	DATA INPUTS
10	A_0		A_3	
11	B_1		A_2	
12	A_1		A_1	
13	A_2		A_0	
14	B_2		A = B	OUTPUTS
15	A_3		A > B	
16	V_{CC}		V_{CC}	

FIGURE 1. Terminal connections.

Device type 01

COMPARING INPUTS				CASCADING INPUTS			OUTPUTS		
A_3, B_3	A_2, B_2	A_1, B_1	A0, B0	A > B	A < B	A = B	A > B	A < B	A = B
$A_3 > B_3$	X	X	X	X	X	X	H	L	L
$A_3 < B_3$	X	X	X	X	X	X	L	H	L
$A_3 = B_3$	$A_2 > B_2$	X	X	X	X	X	H	L	L
$A_3 = B_3$	$A_2 < B_2$	X	X	X	X	X	L	H	L
$A_3 = B_3$	$A_2 = B_2$	$A_1 > B_1$	X	X	X	X	H	L	L
$A_3 = B_3$	$A_2 = B_2$	$A_1 < B_1$	X	X	X	X	L	H	L
$A_3 = B_3$	$A_2 = B_2$	$A_1 = B_1$	$A_0 > B_0$	X	X	X	H	L	L
$A_3 = B_3$	$A_2 = B_2$	$A_1 = B_1$	$A_0 < B_0$	X	X	X	L	H	L
$A_3 = B_3$	$A_2 = B_2$	$A_1 = B_1$	$A_0 = B_0$	H	L	L	H	L	L
$A_3 = B_3$	$A_2 = B2$	$A_1 = B_1$	$A_0 = B_0$	L	H	L	L	H	L
$A_3 = B_3$	$A_2 = B_2$	$A_1 = B_1$	$A_0 = B_0$	L	L	H	L	L	H
$A_3 = B_3$	$A_2 = B_2$	$A_1 = B_1$	$A_0 = B_0$	X	X	H	L	L	H
$A_3 = B_3$	$A_2 = B_2$	$A_1 = B_1$	$A_0 = B_0$	H	H	L	L	L	L
$A_3 = B_3$	$A_2 = B_2$	$A_1 = B_1$	$A_0 = B_0$	L	L	L	H	H	L

Device type 02

$\overline{E}$	Ay	By
H	X	X
L	Word A = Word B	
L	Word A > Word B	
L	Word B > Word A	

A < B	A > B	A = B
L	L	L
L	L	H
L	H	L
H	L	L

H = High level
L = Low level
X = Irrelevant

FIGURE 2. Truth table.

DEVICE TYPE 01

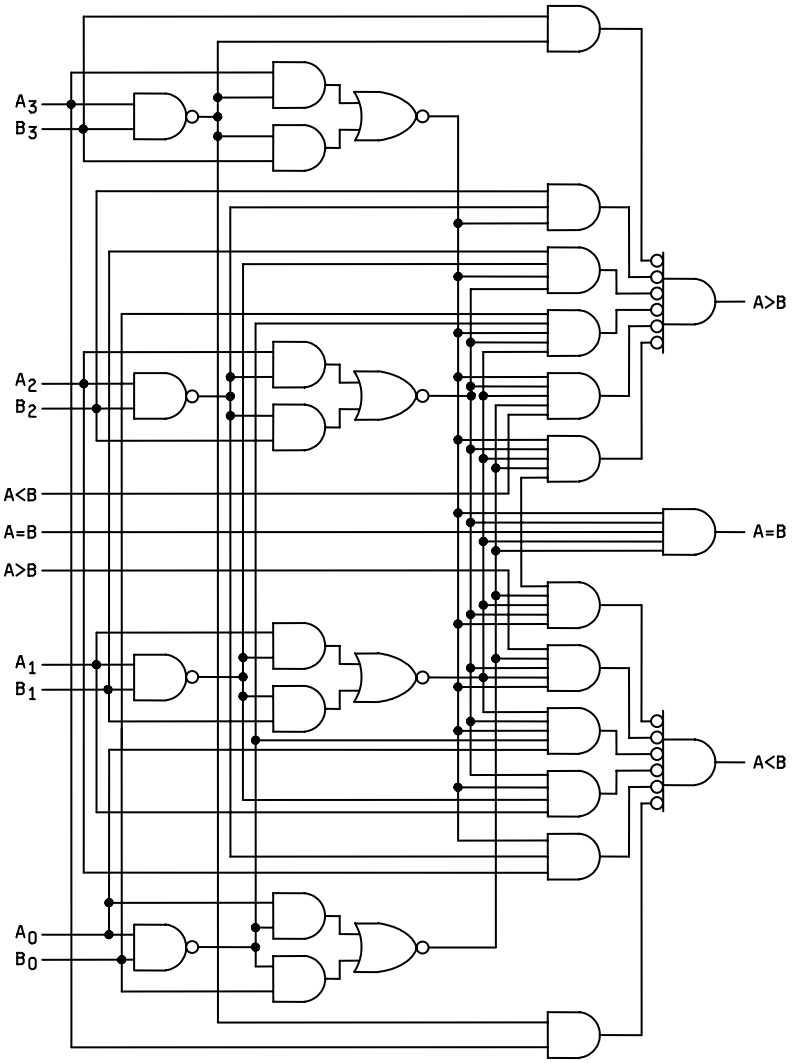

FIGURE 3. Logic diagram.

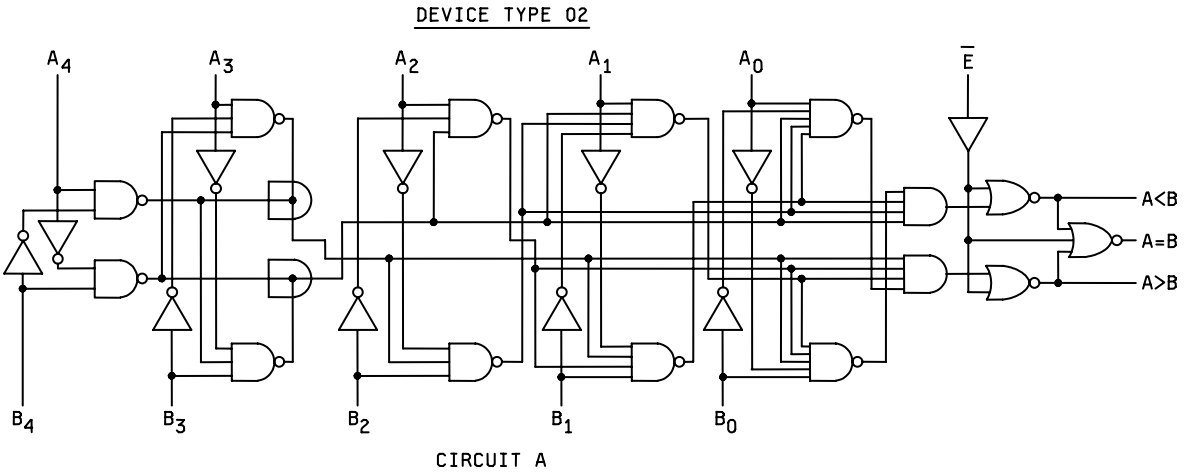

FIGURE 3. Logic diagram – Continued.

DEVICE TYPE 02

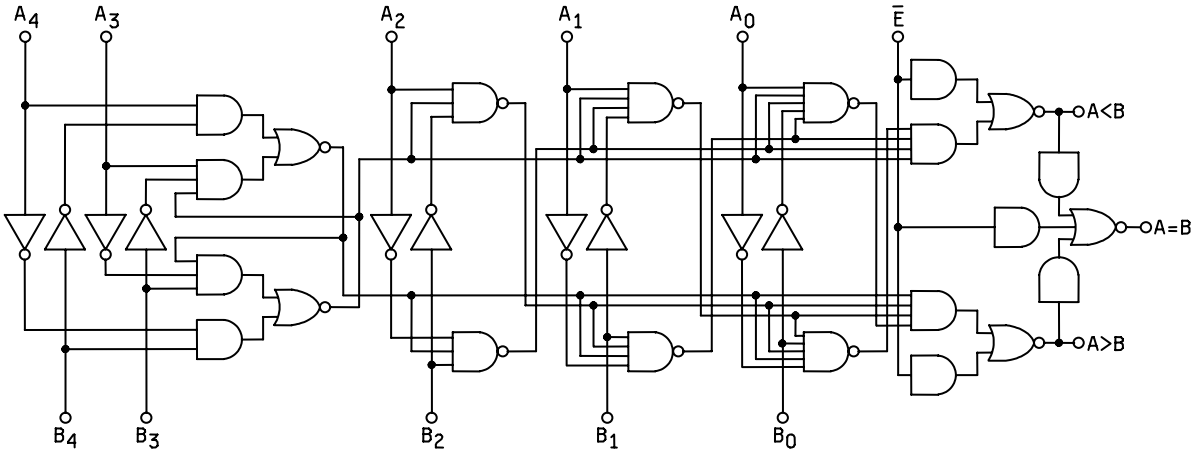

CIRCUIT B

FIGURE 3. Logic diagram – Continued.

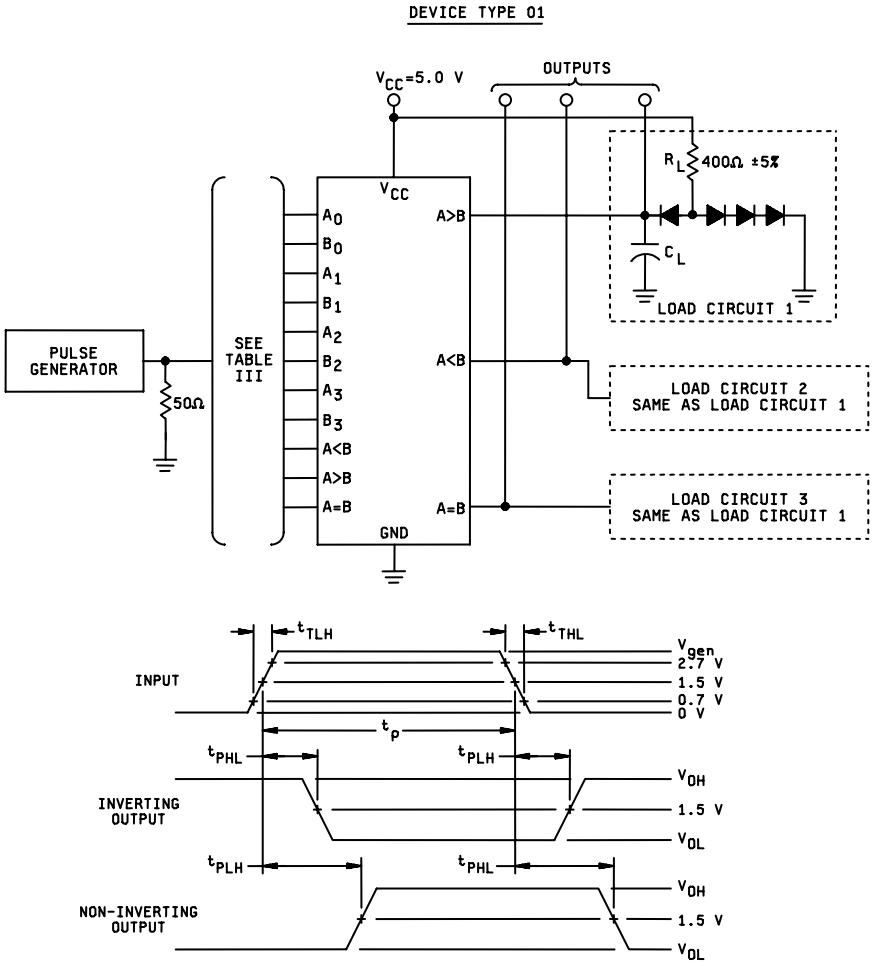

NOTES:

1. The pulse generator has the following characteristics: Vgen = 3.0 V, $t_{THL} = t_{TLH} \leq 10$ ns, $t_P = 500$ ns, PRR = 1.0 MHz, and $Z_{out} \approx 50\ \Omega$.
2. $C_L = 50$ pF and includes probe and jig capacitance.
3. All diodes are 1N3064, or equivalent.

FIGURE 4. Switching time test circuit and waveforms for device type 01.

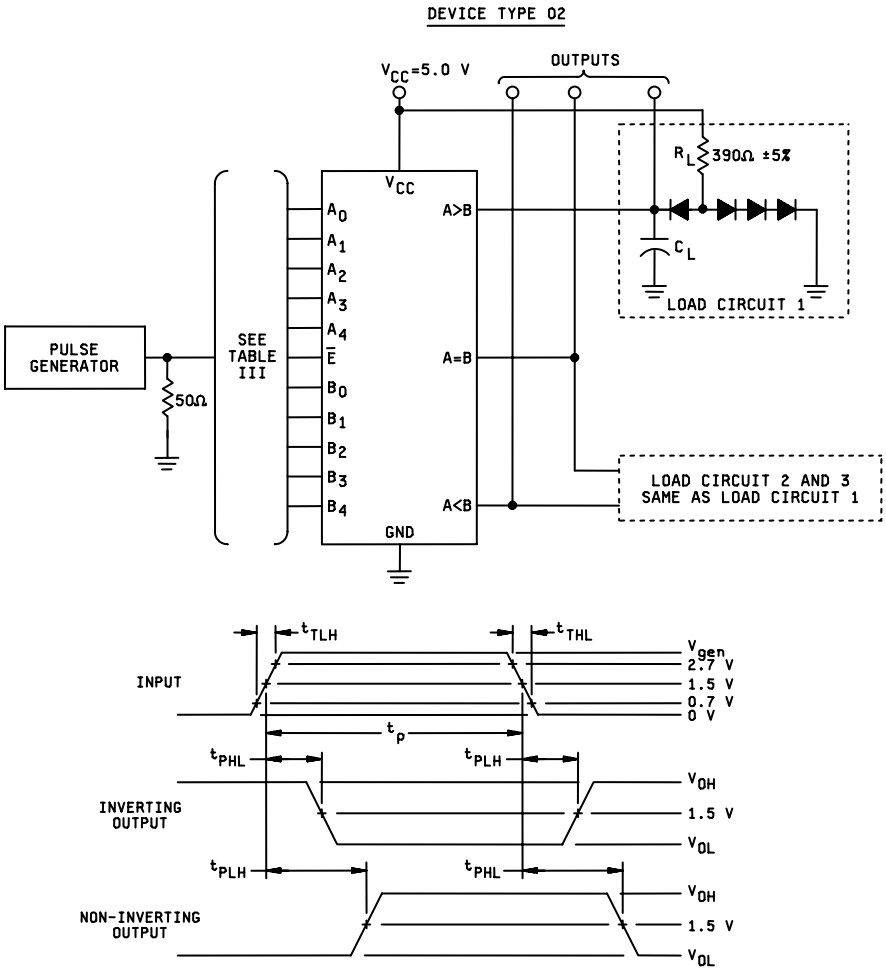

NOTES:

1. The pulse generator has the following characteristics: Vgen = 3.0 V, $t_{THL} = t_{TLH} \leq 10$ ns, $t_P = 500$ ns, PRR = 1.0 MHz, and $Z_{out} \approx 50\ \Omega$.
2. $C_L = 50$ pF and includes probe and jig capacitance.
3. All diodes are 1N3064, or equivalent.

FIGURE 5. Switching time test circuit and waveform for device type 02.

TABLE III. Group A inspection for device type 01. 1/

Subgroup	Symbol	MIL-STD-883 method	Cases E, F Test no.	1 B_3	2 A < B IN	3 A = B IN	4 A > B IN	5 A > B OUT	6 A = B OUT	7 A < B OUT	8 GND	9 B_0	10 A_0	11 B_1	12 A_1	13 A_2	14 B_2	15 A_3	16 V_{CC}	Measured terminal	Limits Min	Limits Max	Unit
1	V_{OH}	3006	1	0.8 V	0.8 V	0.8 V		-400 µA			GND	0.8 V	2.0 V	0.8 V	2.0 V	2.0 V	0.8 V	2.0 V	4.5 V	A > B OUT	2.4		V
Tc = 25°C		"	2	0.8 V		2.0 V			-400 µA		"	0.8 V	0.8 V	0.8 V	0.8 V	0.8 V	0.8 V	0.8 V	"	A = B OUT	"		"
		"	3	2.0 V	2.0 V	0.8 V	0.8 V			-400 µA	"	2.0 V	0.8 V	2.0 V	0.8 V	0.8 V	2.0 V	0.8 V	"	A < B OUT	"		"
	V_{OL}	3007	4	2.0 V	2.0 V	0.8 V	0.8 V	16 mA			"	2.0 V	2.0 V	2.0 V	2.0 V	2.0 V	2.0 V	2.0 V	"	A > B OUT		0.4	V
		"	5	2.0 V	2.0 V	0.8 V	2.0 V		16 mA		"	2.0 V	2.0 V	2.0 V	2.0 V	2.0 V	2.0 V	2.0 V	"	A = B OUT		"	"
		"	6	0.8 V		2.0 V	GND			16 mA	"	0.8 V	0.8 V	0.8 V	0.8 V	0.8 V	0.8 V	0.8 V	"	A < B OUT		"	"
	V_{IC}		7	-12 mA							"								"	B_3		-1.5	V
			8		-12 mA						"								"	A < B IN		"	"
			9			-12 mA					"								"	A = B IN		"	"
			10				-12 mA				"								"	A > B IN		"	"
			11								"	-12 mA							"	B_0		"	"
			12								"		-12 mA						"	A_0		"	"
			13								"			-12 mA					"	B_1		"	"
			14								"				-12 mA				"	A_1		"	"
			15								"					-12 mA			"	A_2		"	"
			16								"						-12 mA		"	B_2		"	"
			17								"							-12 mA	"	A_3		"	"
	I_{IH1}	3010	18	GND		2.4 V					"	GND	5.5 V	GND	5.5 V	5.5 V	GND	5.5 V	5.5 V	A = B IN		120	µA
		"	19	2.4 V							"								"	B_3		"	"
		"	20	GND							"	2.4 V	5.5 V	GND	5.5 V	5.5 V	GND	5.5 V	"	B_0		"	"
		"	21	"							"	5.5 V	2.4 V	GND	"	"	"	"	"	A_0		"	"
		"	22	"							"	GND	5.5 V	2.4 V	"	"	"	"	"	B_1		"	"
		"	23	"							"	"	"	5.5 V	2.4 V	"	"	"	"	A_1		"	"
		"	24	"							"	"	"	GND	5.5 V	2.4 V	5.5 V	"	"	A_2		"	"
		"	25	"							"	"	"	GND	5.5 V	5.5 V	2.4 V	"	"	B_2		"	"
		"	26	5.5 V							"							2.4 V	"	A_3		"	"
	I_{IH2}	"	27	GND	5.5 V						"	GND	5.5 V	GND	5.5 V	5.5 V	GND	5.5 V	"	A < B IN		100	µA
		"	28	"			5.5 V				"	"	"	"	"	"	"	"	"	A > B IN		100	"
		"	29	"		5.5 V					"	"	"	"	"	"	"	"	"	A = B IN		300	"
		"	30	5.5 V							"							"	"	B_3		"	"
		"	31	GND							"	5.5 V	5.5 V	GND	5.5 V	5.5 V	GND	"	"	B_0		"	"
		"	32	"							"	5.5 V	"	GND	"	"	"	"	"	A_0		"	"
		"	33	"							"	GND	"	5.5 V	"	"	"	"	"	B_1		"	"
		"	34	"							"	"	"	5.5 V	"	"	"	"	"	A_1		"	"
		"	35	"							"	"	"	GND	"	"	5.5 V	"	"	A_2		"	"
		"	36	"							"	"	"	GND	"	"	5.5 V	"	"	B_2		"	"
		"	37	5.5 V							"							"	"	A_3			
	I_{IH3}	"	38	GND	2.4 V						"	GND	5.5 V	GND	5.5 V	5.5 V	GND	"	"	A < B IN		40	µA
		"	39	GND			2.4 V				"	GND	5.5 V	GND	5.5 V	5.5 V	GND	"	"	A > B IN		40	"
	I_{IL1}	3009	40	0.4 V							"							"	"	B_3	-2.0	-4.8	mA
		"	41	5.5 v		0.4 V					"	5.5 V	5.5 V	5.5 V	5.5 V	5.5 V	5.5 V	"	"	A = B IN		"	"
		"	42	"							"	0.4 V	5.5 V	"	"	"	"	"	"	B_0		"	"
		"	43	"							"	5.5 V	0.4 V	"	"	"	"	"	"	A_0		"	"
		"	44	"							"	"	5.5 V	0.4 V	"	"	"	"	"	B_1		"	"
		"	45	"							"	"	"	5.5 V	0.4 V	"	"	"	"	A_1		"	"
		"	46	"							"	"	"	"	5.5 V	0.4 V	"	"	"	A_2		"	"
		"	47	"							"	"	"	"	"	5.5 V	0.4 V	"	"	B_2		"	"
		"	48	"							"	"	"	"	"	"	5.5 V	0.4 V	"	A_3		"	"

See footnotes at end of table.

TABLE III. Group A inspection for device type 01 – Continued. 1/

Subgroup	Symbol	MIL-STD-883 method	Cases E, F Test no.	1 B_3	2 A < B IN	3 A = B IN	4 A > B IN	5 A > B OUT	6 A = B OUT	7 A < B OUT	8 GND	9 B_0	10 A_0	11 B_1	12 A_1	13 A_2	14 B_2	15 A_3	16 V_{CC}	Measured terminal	Limits Min	Limits Max	Unit
1 Tc = 25°C	I_{IL2}	3009	49	5.5 V	0.4 V						GND	5.5 V	5.5 V	5.5 V	5.5 V	5.5 V	5.5 V	5.5 V	5.5 V	A < B IN	-0.7	-1.6	mA
		"	50	"			0.4 V				"	"	"	"	"	"	"	5.5 V	"	A > B IN	-0.7	-1.6	"
	I_{OS}	3011	51	GND	GND	GND		GND			GND	GND	GND	GND	GND	GND	GND	GND	5.5 V	A > B OUT	-20	-55	mA
		"	52	GND	GND	2.0 V			GND		"	"	"	"	"	"	"	"	"	A = B OUT	"	"	"
		"	53	GND	2.0 V	GND	GND			GND	"	"	"	"	"	"	"	"	"	A < B OUT	"	"	"
	I_{CC}	3005	54	4.5 V	4.5 V	GND	4.5 V				"	4.5 V	4.5 V	4.5 V	4.5 V	4.5 V	4.5 V	4.5 V	"	V_{CC}		88	mA
2	Same tests, terminal conditions and limits as subgroup 1, except T_C = +125°C and V_{IC} tests are omitted.																						
3	Same tests, terminal conditions and limits as subgroup 1, except T_C = -55°C and V_{IC} tests are omitted.																						
7 Tc = 25°C		Truth table tests	55	0.4 V	2.4 V	0.4 V	0.4 V	H	L	L	GND	2.4 V	0.4 V	2.4 V	0.4 V	0.4 V	2.4 V	2.4 V	4.5 V	All outputs	See notes 2/ and 3/		
			56	2.4 V	0.4 V	"	2.4 V	L	"	H	"	0.4 V	2.4 V	0.4 V	2.4 V	2.4 V	0.4 V	0.4 V	"	"			
			57	"	2.4 V	"	0.4 V	H	"	L	"	2.4 V	0.4 V	2.4 V	0.4 V	2.4 V	0.4 V	2.4 V	"	"			
		"	58	"	0.4 V	"	2.4 V	L	"	H	"	0.4 V	2.4 V	0.4 V	2.4 V	0.4 V	2.4 V	"	"	"			
		"	59	"	2.4 V	"	0.4 V	H	"	L	"	2.4 V	0.4 V	0.4 V	2.4 V	2.4 V	"	"	"	"			
		"	60	"	0.4 V	"	2.4 V	L	"	H	"	0.4 V	2.4 V	2.4 V	0.4 V	"	"	"	"	"			
		"	61	"	2.4 V	"	0.4 V	H	"	L	"	0.4 V	2.4 V	2.4 V	2.4 V	"	"	"	"	"			
		"	62	"	0.4 V	"	2.4 V	L	"	H	"	2.4 V	0.4 V	"	"	"	"	"	"	"			
		"	63	"	"	"	2.4 V	H	"	L	"	"	2.4 V	"	"	"	"	"	"	"			
		"	64	"	"	2.4 V	0.4 V	L	H	"	"	"	"	"	"	"	"	"	"	"			
		"	65	"	"	2.4 V	2.4 V	"	H	"	"	"	"	"	"	"	"	"	"	"			
		"	66	"	2.4 V	0.4 V	0.4 V	"	L	H	"	"	"	"	"	"	"	"	"	"			
		"	67	"	"	0.4 V	2.4 V	"	L	L	"	"	"	"	"	"	"	"	"	"			
		"	68	"	"	2.4 V	0.4 V	"	H	"	"	"	"	"	"	"	"	"	"	"			
		"	69	"	"	2.4 V	2.4 V	"	H	"	"	"	"	"	"	"	"	"	"	"			
		"	70	"	0.4 V	0.4 V	0.4 V	H	L	H	"	"	"	"	"	"	"	"	"	"			
8	Repeat subgroups 7 at T_C = +125°C and T_C = -55°C.																						
9 Tc = 25°C	t_{PLH1}	3003 Fig. 4	71	IN		GND	GND			OUT	GND	GND	GND	GND	GND	GND	GND	2.4 V	5.0 V	B_3 to A < B	2	29	ns
			72	GND		"	GND			OUT	"	IN	2.4 V	"	"	"	"	GND	"	B_0 to A < B	"	"	"
		"	73	"	GND	"		OUT			"	2.4 V	IN	"	"	"	"	"	"	A_0 to A > B	"	"	"
		"	74	"		"	GND			OUT	"	GND	GND	IN	2.4 V	"	"	"	"	B_1 to A < B	"	"	"
		"	75	"	GND	"		OUT			"	"	"	2.4 V	IN	"	"	"	"	A_1 to A > B	"	"	"
		"	76	"	GND	"		OUT			"	"	"	GND	GND	IN	2.4 V	"	"	A_2 to A > B	"	"	"
		"	77	"		"	GND			OUT	"	"	"	"	"	2.4 V	IN	"	"	B_2 to A < B	"	"	"
		"	78	2.4 V	GND	"		OUT			"	"	"	"	"	GND	GND	IN	"	A_3 to A > B	"	"	"
	t_{PLH2}	"	79	IN		2.4 V			OUT		"	GND	"	"	"	"	"	GND	"	B_3 to A = B	"	39	"
		"	80	GND		"			"		"	IN	"	"	"	"	"	"	"	B_0 to A = B	"	"	"
		"	81	"		"			"		"	GND	"	IN	"	"	"	"	"	B_1 to A = B	"	"	"
		"	82	"		"			"		"	"	"	GND	"	IN	"	"	"	A_2 to A = B	"	"	"
	t_{PLH3}	"	83	"	IN	GND		OUT			"	"	"	"	"	GND	"	"	"	A<B to A>B	"	14	"
		"	84	"	GND	IN		OUT			"	"	"	"	"	"	"	"	"	A=B to A>B	"	"	"
	t_{PLH5}	"	85	"		IN	GND			OUT	"	"	"	"	"	"	"	"	"	A=B to A<B	"	14	"
		"	86	"		GND	IN			OUT	"	"	"	"	"	"	"	"	"	A>B to A<B	"	"	"
	t_{PLH4}	"	87	"		IN			OUT		"	"	"	"	"	"	"	"	"	A=B to A=B	"	23	"

See footnotes at end of table.

TABLE III. Group A inspection for device type 01 – Continued. 1/

Subgroup	Symbol	MIL-STD-883 method	Cases E, F Test no.	1 B_3	2 A < B IN	3 A = B IN	4 A > B IN	5 A > B OUT	6 A = B OUT	7 A < B OUT	8 GND	9 B_0	10 A_0	11 B_1	12 A_1	13 A_2	14 B_2	15 A_3	16 V_{CC}	Measured terminal	Limits Min	Limits Max	Unit
9	t_{PHL1}	3003	88	IN		GND	GND			OUT	GND	GND	GND	GND	GND	GND	GND	2.4 V	5.0 V	B_3 to A < B	2	34	ns
Tc = 25°C		Fig. 4	89	GND		"	"			"	"	IN	2.4 V	"	"	"	"	GND	"	B_0 to A < B	"	"	"
		"	90	"	GND	"		OUT			"	2.4 V	IN	"	"	"	"	"	"	A_1 to A > B	"	"	"
		"	91	"		"	GND			OUT	"	GND	GND	IN	2.4 V	"	"	"	"	B_1 to A < B	"	"	"
		"	92	"	GND	"		OUT			"	"	"	2.4 V	IN	"	"	"	"	A_1 to A > B	"	"	"
		"	93	"	"	"		"			"	"	"	GND	GND	IN	2.4 V	"	"	A_2 to A > B	"	"	"
		"	94	"		"	GND			OUT	"	"	"	"	"	2.4 V	IN	"	"	B_2 to A < B	"	"	"
		"	95	2.4 V	GND			OUT			"	"	"	"	"	GND	GND	IN	"	A_3 to A > B	"	"	"
	t_{PHL2}	"	96	IN		2.4 V			OUT		"	"	"	"	"	"	"	GND	"	B_3 to A = B	"	"	"
		"	97	GND		"			"		"	IN	"	"	"	"	"	"	"	B_0 to A = B	"	"	"
		"	98	"		"			"		"	GND	"	IN	"	"	"	"	"	B_1 to A = B	"	"	"
		"	99	"		"			"		"	"	"	GND	"	IN	"	"	"	A_2 to A = B	"	"	"
	t_{PHL3}	"	100	"	IN	GND		OUT			"	"	"	"	"	GND	"	GND	"	A<B to A>B	"	20	"
		"	101	"	GND	IN		"			"	"	"	"	"	"	"	"	"	A=B to A>B	"	"	"
	t_{PHL5}	"	102	"		IN	GND			OUT	"	"	"	"	"	"	"	"	"	A=B to A<B	"	20	"
		"	103	"		GND	IN			"	"	"	"	"	"	"	"	"	"	A>B to A<B	"	"	"
	t_{PHL4}	"	104	"		IN			OUT		"		"	"	"	"	"	"	"	A=B to A=B	"	20	"
10	t_{PLH1}	3003	105	IN		GND	GND			OUT	GND	GND	GND	GND	GND	GND	GND	2.4 V	5.0 V	B_3 to A < B	2	38	"
Tc =		Fig. 4	106	GND		"	GND			OUT	"	IN	2.4 V	"	"	"	"	GND	"	B_0 to A < B	"	"	"
125°C		"	107	"	GND	"		OUT			"	2.4 V	IN	"	"	"	"	"	"	A_0 to A > B	"	"	"
		"	108	"		"	GND			OUT	"	GND	GND	IN	2.4 V	"	"	"	"	B_1 to A < B	"	"	"
		"	109	"	GND	"		OUT			"	"	"	2.4 V	IN	"	"	"	"	A_1 to A > B	"	"	"
		"	110	"	GND	"		OUT			"	"	"	GND	GND	IN	2.4 V	"	"	A_2 to A > B	"	"	"
		"	111	"		"	GND			OUT	"	"	"	"	"	2.4 V	IN	"	"	B_2 to A < B	"	"	"
		"	112	2.4 V	GND	"		OUT			"	"	"	"	"	GND	GND	IN	"	A_3 to A > B	"	"	"
	t_{PLH2}	"	113	IN		2.4 V			OUT		"	GND	"	"	"	"	"	GND	"	B_3 to A = B	"	49	"
		"	114	GND		"			"		"	IN	"	"	"	"	"	"	"	B_0 to A = B	"	"	"
		"	115	"		"			"		"	GND	"	IN	"	"	"	"	"	B_1 to A = B	"	"	"
		"	116	"		"			"		"	"	"	GND	"	IN	"	"	"	A_2 to A = B	"	"	"
	t_{PLH3}	"	117	"	IN	GND		OUT			"	"	"	"	"	GND	"	"	"	A<B to A>B	"	19	"
		"	118	"	GND	IN		OUT			"	"	"	"	"	"	"	"	"	A=B to A>B	"	"	"
	t_{PLH5}	"	119	"		IN	GND			OUT	"	"	"	"	"	"	"	"	"	A=B to A<B	"	19	"
		"	120	"		GND	IN			OUT	"	"	"	"	"	"	"	"	"	A>B to A<B	"	"	"
	t_{PLH4}	"	121	"		IN			OUT		"	"	"	"	"	"	"	"	"	A=B to A=B	"	30	"
	t_{PHL1}	"	122	IN		GND	GND			OUT	GND	GND	GND	GND	GND	GND	GND	2.4 V	5.0 V	B_3 to A < B	2	43	"
		"	123	GND		"	"			"	"	IN	2.4 V	"	"	"	"	GND	"	B_0 to A < B	"	"	"
		"	124	"	GND	"		OUT			"	2.4 V	IN	"	"	"	"	"	"	A_1 to A > B	"	"	"
		"	125	"		"	GND			OUT	"	GND	GND	IN	2.4 V	"	"	"	"	B_1 to A < B	"	"	"
		"	126	"	GND	"		OUT			"	"	"	2.4 V	IN	"	"	"	"	A_1 to A > B	"	"	"
		"	127	"	"	"		"			"	"	"	GND	GND	IN	2.4 V	"	"	A_2 to A > B	"	"	"
		"	128	"		"	GND			OUT	"	"	"	"	"	2.4 V	IN	"	"	B_2 to A < B	"	"	"
		"	129	2.4 V	GND	"		OUT			"	"	"	"	"	GND	GND	IN	"	A_3 to A > B	"	"	"

See footnotes at end of table.

TABLE III. Group A inspection for device type 01 – Continued. 1/

Subgroup	Symbol	MIL-STD-883 method	Cases E, F	1	2	3	4	5	6	7	8	9	10	11	12	13	14	15	16	Measured terminal	Limits		Unit
			Test no.	B_3	A < B IN	A = B IN	A > B IN	A > B OUT	A = B OUT	A < B OUT	GND	B_0	A_0	B_1	A_1	A_2	B_2	A_3	V_{CC}		Min	Max	
10 Tc = 125°C	t_{PHL2}	3003	130	IN		2.4 V			OUT		GND	GND	GND	GND	GND	GND	GND	GND	5.0 V	B_3 to A = B	2	43	ns
		Fig. 4	131	GND		"			"		"	IN	"	"	"	"	"	"	"	B_0 to A = B	"	"	"
		"	132	"		"			"		"	GND	"	IN	"	"	"	"	"	B_1 to A = B	"	"	"
		"	133	"		"			"		"	"	"	GND	"	IN	"	"	"	A_2 to A = B	"	"	"
	t_{PHL3}	"	134	"	IN	GND		OUT			"	"	"	"	"	GND	"	GND	"	A<B to A>B	"	26	"
		"	135	"	GND	IN		"			"	"	"	"	"	"	"	"	"	A=B to A>B	"	"	"
	t_{PHL5}	"	136	"		IN	GND			OUT	"	"	"	"	"	"	"	"	"	A=B to A<B	"	"	"
		"	137	"		GND	IN			"	"	"	"	"	"	"	"	"	"	A>B to A<B	"	"	"
	t_{PHL4}	"	138	"		IN			OUT		"		"	"	"	"	"	"	"	A=B to A=B	"	"	"
11	Same tests, terminal conditions and limits as subgroup 10, except T_C = -55°C.																						

NOTES:

1/ Pins not designated may be “high” level logic, “low” level logic or open.

2/ Tests shall be performed in sequence.

3/ Output voltages shall be either; (a) H = 2.4 V minimum and L = 0.4 V maximum when using a high speed checker double comparator; or (b) H ≥ 1.5 V when using a high speed checker single comparator.

TABLE III. Group A inspection for device type 02. 1/

Subgroup	Symbol	MIL-STD-883 method	Cases E, F Test no.	1 E	2 A < B	3 B_0	4 B_1	5 B_2	6 B_3	7 B_4	8 GND	9 A_4	10 A_3	11 A_2	12 A_1	13 A_0	14 A = B	15 A > B	16 V_{CC}	Measured terminal	Limits Min	Limits Max	Unit
1	V_{OL}	3007	1	GND	16 mA	0.8 V	0.8 V	0.8 V	0.8 V	0.8 V	GND	0.8 V	0.8 V	0.8 V	0.8 V	0.8 V			4.5 V	A < B		0.4	V
Tc = 25°C	"	"	2	GND		"	"	"	"	"	"	"	"	"	"	"		16 mA	"	A > B		"	"
	"	"	3	2.0 V		"	"	"	"	"	"	"	"	"	"	"	16 mA		"	A = B		"	"
	"	"	4	2.0 V		"	"	"	"	"	"	"	"	"	"	2.0 V		16 mA	"	A > B		"	"
	"	"	5	GND		"	"	"	"	"	"	"	"	"	"	2.0 V	16 mA		"	A = B		"	"
	"	"	6	GND		2.0 V	"	"	"	"	"	"	"	"	"	0.8 V	16 mA		"	A = B		"	"
	"	"	7	2.0 v	16 mA	"	"	"	"	"	"	"	"	"	"	"				A < B		"	"
	V_{OH}	3006	8	0.8 V	-800 μA	"	"	"	"	"	"	"	"	"	"	"			"	A < B	2.4		V
	"		9	"	"	0.8 V	2.0 V	"	"	"	"	"	"	"	"	"			"	A < B	"		"
	"		10	"	"	"	0.8 V	2.0 V	"	"	"	"	"	"	"	"			"	A < B	"		"
	"		11	"	"	"	"	0.8 V	2.0 V	"	"	"	"	"	"	"			"	A < B	"		"
	"		12	"	"	"	"		0.8 V	2.0 V	"	"	"	"	"	"			"	A < B	"		"
	"		13	"		"	"	"	"	2.0 V	"	2.0 V	"	"	"	"	-800 μA		"	A = B	"		"
	"		14	"		"	"	"	"	0.8 V	"	2.0 V	"	"	"	"		-800 μA	"	A > B	"		"
	"		15	"		"	"	"	"	"	"	0.8 V	2.0 V	"	"	"		"	"	A > B	"		"
	"		16	"		"	"	"	"	"	"	"	0.8 V	2.0 V	"	"		"	"	A > B	"		"
	"		17	"		"	"	"	"	"	"	"	"	0.8 V	2.0 V	"		"	"	A > B	"		"
	"		18	"		"	"	"	"	"	"	"	"	0.8 V	0.8 V	2.0 V		"	"	A > B	"		"
	I_{IL1}	3009	19	0.4 V							"	GND	GND	GND	GND	GND			5.5 V	E	-1.4	-3.2	mA
	"		20			0.4 V					"	"	"	"	"	"			"	B_0	"	"	"
	"		21				0,4 V				"	"	"	"	"	"			"	B_1	"	"	"
	"		22					0.4 V			"	"	"	"	"	"			"	B_2	"	"	"
	"		23						0.4 V		"	"	"	"	"	"			"	B_3	"	"	"
	"		24							0.4 V	"	"	"	"	"	"			"	B_4	"	"	"
	"		25			GND	GND	GND	GND	GND	"	0.4 V							"	A_4	"	"	"
	"		26			"	"	"	"	"	"		0.4 V						"	A_3	"	"	"
	"		27			"	"	"	"	"	"			0.4 V					"	A_2	"	"	"
	"		28			"	"	"	"	"	"				0.4 V				"	A_1	"	"	"
	"		29			"	"	"	"	"	"					0.4 V			"	A_0	"	"	"
	V_{IC}		30	-12 mA							"								4.5 V	E		-1.5	V
			31			-12 mA					"								"	B_0		"	"
			32				-12 mA				"								"	B_1		"	"
			33					-12 mA			"								"	B_2		"	"
			34						-12 mA		"								"	B_3		"	"
			35							-12 mA	"								"	B_4		"	"
			36								"	-12 mA							"	A_4		"	"
			37								"		-12 mA						"	A_3		"	"
			38								"			-12 mA					"	A_2		"	"
			39								"				-12 mA				"	A_1		"	"
			40								"					-12 mA			"	A_0		"	"
	I_{OS}	3011	41	GND	GND	4.5 V	4.5 V	4.5 V	4.5 V	4.5 V	"	4.5 V	4.5 V	4.5 V	4.5 V	GND			5.5 V	A < B	-20	-70	mA
	"		42	"		4.5 V	"	"	"	"	"	"	"	"	"	4.5 V	GND		"	A = B		"	"
	"		43	"		GND	"	"	"	"	"	"	"	"	"	4.5 V		GND	"	A > B		"	"
	I_{CC}	3012	44								"								"	V_{CC}		81	"
	I_{IH1}	3010	45			2.4 V					"	5.5 V	5.5 V	5.5 V	5.5 V	5.5 V			"	B_0	0	80	μA
	"		46				2.4 V				"	"	"	"	"	"			"	B_1	"	"	"
	"		47					2.4 V			"	"	"	"	"	"			"	B_2	"	"	"
	"		48						2.4 V		"	"	"	"	"	"			"	B_3	"	"	"
	"		49							2.4 V	"	"	"	"	"	"			"	B_4	"	"	"
	"		50			5.5 V	5.5 V	5.5 V	5.5 V	5.5 V	"	2.4 V							"	A_4	"	"	"

See footnotes at end of table.

TABLE III. Group A inspection for device type 02 – Continued. 1/

Subgroup	Symbol	MIL-STD-883 method	Cases E, F Test no.	1 E	2 A < B	3 B_0	4 B_1	5 B_2	6 B_3	7 B_4	8 GND	9 A_4	10 A_3	11 A_2	12 A_1	13 A_0	14 A = B	15 A > B	16 V_{CC}	Measured terminal	Limits Min	Limits Max	Unit
1 Tc = 25°C	I_{IH1}	3010	51			5.5 V	5.5 V	5.5 V	5.5 V	5.5 V	"		2.4 V						5.5 V	A_3	0	80	µA
		"	52			"	"	"	"	"	"			2.4 V					"	A_2	"	"	"
		"	53			"	"	"	"	"	"				2.4 V				"	A_1	"	"	"
		"	54			"	"	"	"	"	"					2.4 V			"	A_0	"	"	"
		"	55	2.4 V							"								"	E	"	"	"
	I_{IH2}	"	56			5.5 V					"	5.5 V	5.5 V	5.5 V	5.5 V	5.5 V			"	B_0	"	200	"
		"	57				5.5 V				"	"	"	"	"	"			"	B_1	"	"	"
		"	58					5.5 V			"	"	"	"	"	"			"	B_2	"	"	"
		"	59						5.5 V		"	"	"	"	"	"			"	B_3	"	"	"
		"	60							5.5 V	"	"	"	"	"	"			"	B_4	"	"	"
		"	61			5.5 V	5.5 V	5.5 V	5.5 V	"	"	"	5.5 V						"	A_4	"	"	"
		"	62			"	"	"	"	"	"			5.5 V					"	A_3	"	"	"
		"	63			"	"	"	"	"	"				5.5 V				"	A_2	"	"	"
		"	64			"	"	"	"	"	"					5.5 V			"	A_1	"	"	"
		"	65			"	"	"	"	"	"								"	A_0	"	"	"
		"	66	5.5 V							"								"	E	"	"	"
2	Same tests, terminal conditions and limits as subgroup 1, except T_C = +125°C and V_{IC} tests are omitted.																						
3	Same tests, terminal conditions and limits as subgroup 1, except T_C = -55°C and V_{IC} tests are omitted.																						
7 Tc = 25°C		Truth table tests	67	0.8 V	H	2.0 V	2.0 V	2.0 V	2.0 V	0.8 V	GND	0.8 V	0.8 V	0.8 V	0.8 V	0.8 V	L	L	5.0 V	All Outputs	See notes 2/ and 3/		
			68	"	L	"	"	"	2.0 V	"	"	2.0 V	"	"	"	"	"	H	"				
			69	"	"	"	"	"	0.8 V	"	"	0.8 V	"	"	"	"	"	"	"	"			
			70	"	"	"	"	"	"	"	"	"	2.0 V	"	"	"	"	"	"	"			
			71	"	H	"	"	0.8 V	"	"	"	"	0.8 V	"	"	"	"	L	"	"			
			72	"	L	"	"	"	"	"	"	"	"	2.0 V	"	"	"	H	"	"			
			73	"	H	"	0.8 V	"	"	"	"	"	"	0.8 V	"	"	"	L	"	"			
			74	"	L	"	"	"	"	"	"	"	"	"	2.0 V	"	"	H	"	"			
			75	"	"	0.8 V	"	"	"	"	"	"	"	"	0.8 V	"	H	L	"	"			
			76	"	"	"	"	"	"	"	"	"	"	"	0.8 V	2.0 V	L	H	"	"			
			77	"	"	"	"	"	"	"	"	"	2.0 V	2.0 V	2.0 V	"	"	H	"	"			
			78	"	H	"	"	"	"	2.0 V	"	"	2.0 V	"	"	"	"	L	"	"			
			79	"	L	"	"	"	"	0.8 V	"	"	0.8 V	"	"	"	"	H	"	"			
			80	"	H	"	"	"	2.0 V	"	"	"	"	"	"	"	"	L	"	"			
			81	"	L	"	"	"	0.8 V	"	"	"	"	0.8 V	"	"	"	H	"	"			
			82	"	H	"	"	2.0 V	"	"	"	"	"	"	"	"	"	L	"	"			
			83	"	L	"	"	0.8 V	"	"	"	"	"	"	0.8 V	"	"	H	"	"			
			84	"	H	"	2.0 V	"	"	"	"	"	"	"	"	"	"	L	"	"			
			85	"	H	2.0 V	0.8 V	"	"	"	"	"	"	"	"	0.8 V	"	"	"	"			
			86	2.0 V	L	0.8 V	0.8 V	"	"	"	"	2.0 V	2.0 V	2.0 V	2.0 V	2.0 V	"	"	"	"			
			87	2.0 V	"	2.0 V	2.0 V	2.0 V	2.0 V	2.0 V	"	0.8 V	0.8 V	0.8 V	0.8 V	0.8 V	"	"	"	"			
			88	0.8 V	"	"	0.8 V	0.8 V	0.8 V	0.8 V	"	0.8 V	0.8 V	0.8 V	0.8 V	2.0 V	H	"	"	"			
			89	2.0 V	"	"	2.0 V	2.0 V	2.0 V	2.0 V	"	2.0 V	2.0 V	2.0 V	2.0 V	"	L	"	"	"			
			90	0.8 V	H	"	"	"	"	2.0 V	"	0.8 V	"	"	"	"	"	"	"	"			
			91	"	L	"	"	"	"	0.8 V	"	2.0 V	"	"	"	"	"	H	"	"			
			92	"	H	"	"	"	"	2.0 V	"	"	0.8 V	"	"	"	"	L	"	"			
			93	"	L	"	"	"	0.8 V	"	"	"	2.0 V	"	"	"	"	H	"	"			
			94	"	H	"	"	"	2.0 V	"	"	"	"	0.8 V	"	"	"	L	"	"			
			95	"	L	"	"	0.8 V	"	"	"	"	"	2.0 V	"	"	"	H	"	"			
			96	"	H	"	"	2.0 V	"	"	"	"	"	"	0.8 V	"	"	L	"	"			
			97	"	L	"	0.8 V	2.0 V	"	"	"	"	"	"	2.0 V	"	"	H	"	"			
8	Repeat subgroup 7 at T_C = +125°C and T_C = -55°C.																						

See footnotes at end of table.

TABLE III. Group A inspection for device type 02 – Continued. 1/

Subgroup	Symbol	MIL-STD-883 method	Cases E, F Test no.	1 E	2 A < B	3 B_0	4 B_1	5 B_2	6 B_3	7 B_4	8 GND	9 A_4	10 A_3	11 A_2	12 A_1	13 A_0	14 A = B	15 A > B	16 V_{CC}	Measured terminal	Limits Min	Limits Max	Unit
9	t_{PLH1}	3003	98	IN		2.4 V	2.4 V	2.4 V	2.4 V	2.4 V	GND	2.4 V	2.4 V	2.4 V	2.4 V	2.4 V	OUT		5.0 V	E to A = B	3	16	ns
Tc = 25°C	t_{PHL1}	Fig. 5	99	"		"	"	"	"	"	"	2.4 V	2.4 V	2.4 V	2.4 V	2.4 V	OUT		"	E to A = B	"	14	"
	t_{PLH2}	"	100	"	OUT	"	"	"	"	"	"	GND	GND	GND	GND	GND			"	E to A < B	"	19	"
	t_{PHL2}	"	101	"	OUT	"	"	"	"	"	"	GND	GND	GND	GND	GND			"	E to A < B	"	17	"
	t_{PLH3}	"	102	"		GND	GND	GND	GND	GND	"	2.4 V	2.4 V	2.4 V	2.4 V	2.4 V		OUT	"	E to A > B	"	19	"
	t_{PHL3}	"	103	"		GND	GND	GND	GND	GND	"	"	"	"	"	2.4 V		OUT	"	E to A > B	"	17	"
	t_{PLH4}	"	104	GND		2.4 V	2.4 V	2.4 V	2.4 V	2.4 V	"	"	"	"	"	IN	OUT		"	A_0 to A = B	9	42	"
		"	105	"		"	"	"	"	"	"	"	"	"	IN	2.4 V	"		"	A_1 to A = B	"	"	"
		"	106	"		"	"	"	"	"	"	"	"	IN	2.4 V	"	"		"	A_2 to A = B	"	"	"
		"	107	"		"	"	"	"	"	"	"	IN	2.4 V	"	"	"		"	A_3 to A = B	"	"	"
		"	108	"		"	"	"	"	"	"	IN	2.4 V	"	"	"	"		"	A_4 to A = B	"	"	"
	t_{PHL4}	"	109	"		"	"	"	"	"	"	2.4 V	"	"	"	IN	"		"	A_0 to A = B	"	"	"
		"	110	"		"	"	"	"	"	"	"	"	"	IN	2.4 V	"		"	A_1 to A = B	"	"	"
		"	111	"		"	"	"	"	"	"	"	"	IN	2.4 V	"	"		"	A_2 to A = B	"	"	"
		"	112	"		"	"	"	"	"	"	"	IN	2.4 V	"	"	"		"	A_3 to A = B	"	"	"
		"	113	"		"	"	"	"	"	"	IN	2.4 V	"	"	"	"		"	A_4 to A = B	"	"	"
	t_{PLH5}	"	114	"		IN	"	"	"	"	"	2.4 V	"	"	"	"	"		"	B_0 to A = B	"	"	"
		"	115	"		2.4 V	IN	"	"	"	"	"	"	"	"	"	"		"	B_1 to A = B	"	"	"
		"	116	"		"	2.4 V	IN	"	"	"	"	"	"	"	"	"		"	B_2 to A = B	"	"	"
		"	117	"		"	"	2.4 V	IN	"	"	"	"	"	"	"	"		"	B_3 to A = B	"	"	"
		"	118	"		"	"	"	2.4 V	IN	"	"	"	"	"	"	"		"	B_4 to A = B	"	"	"
	t_{PHL5}	"	119	"		IN	"	"	"	2.4 V	GND	"	"	"	"	"	"		"	B_0 to A = B	"	"	"
		"	120	"		2.4 V	IN	"	"	"	"	"	"	"	"	"	"		"	B_1 to A = B	"	"	"
		"	121	"		"	2.4 V	IN	"	"	"	"	"	"	"	"	"		"	B_2 to A = B	"	"	"
		"	122	"		"	"	2.4 V	IN	"	"	"	"	"	"	"	"		"	B_3 to A = B	"	"	"
	t_{PLH5}	"	123	"		"	"	"	2.4 V	IN	"	"	"	"	"	"	"		"	B_4 to A = B	"	"	"
	t_{PLH6}	"	124	"	OUT	"	"	"	"	2.4 V	"	"	"	"	"	IN			"	A_0 to A < B	6	27	"
	t_{PHL6}	"	125	"	"	"	"	"	"	2.4 V	"	"	"	"	"	IN			"	A_0 to A < B	6	25	"
	t_{PLH7}	"	126	"	"	IN	GND	GND	GND	GND	"	GND	GND	GND	GND	GND			"	B_0 to A < B	3	22	"
	t_{PHL7}	"	127	"	"	IN	"	"	"	"	"	"	"	"	"	GND			"	B_0 to A < B	"	20	"
	t_{PLH8}	"	128	"		GND	"	"	"	"	"	"	"	"	"	IN		OUT	"	A_0 to A > B	"	22	"
	t_{PHL8}	"	129	"		GND	"	"	"	"	"	"	"	"	"	IN		OUT	"	A_0 to A > B	"	20	"
	t_{PLH9}	"	130	"		IN	2.4 V	2.4 V	2.4 V	2.4 V	"	2.4 V	2.4 V	2.4 V	2.4 V	2.4 V		OUT	"	B_0 to A > B	6	27	"
	t_{PHL9}	"	131	"		IN	2.4 V	2.4 V	2.4 V	2.4 V	"	2.4 V	2.4 V	2.4 V	2.4 V	2.4 V		OUT	"	B_0 to A > B	6	25	"

See footnotes at end of table.

TABLE III. Group A inspection for device type 02 – Continued. 1/

Subgroup	Symbol	MIL-STD-883 method	Cases E, F Test no.	1 E	2 A < B	3 B_0	4 B_1	5 B_2	6 B_3	7 B_4	8 GND	9 A_4	10 A_3	11 A_2	12 A_1	13 A_0	14 A = B	15 A > B	16 V_{CC}	Measured terminal	Limits Min	Limits Max	Unit
10 Tc = 125°C	t_{PLH1}	3003 Fig. 5	132	IN		2.4 V	2.4 V	2.4 V	2.4 V	2.4 V	GND	2.4 V	2.4 V	2.4 V	2.4 V	2.4 V	OUT		5.0 V	E to A = B	3	22	ns
	t_{PHL1}		133	"		"	"	"	"	"	"	2.4 V	2.4 V	2.4 V	2.4 V	2.4 V	OUT		"	E to A = B	"	19	"
	t_{PLH2}	"	134	"	OUT	"	"	"	"	"	"	GND	GND	GND	GND	GND			"	E to A < B	"	25	"
	t_{PHL2}	"	135	"	OUT	"	"	"	"	"	"	GND	GND	GND	GND	GND			"	E to A < B	"	21	"
	t_{PLH3}	"	136	"		GND	GND	GND	GND	GND	"	2.4 V	2.4 V	2.4 V	2.4 V	2.4 V		OUT	"	E to A > B	"	25	"
	t_{PHL3}	"	137	"		GND	GND	GND	GND	GND	"	"	"	"	"	2.4 V		OUT	"	E to A > B	"	21	"
	t_{PLH4}	"	138	GND		2.4 V	2.4 V	2.4 V	2.4 V	2.4 V	"	"	"	"	"	IN	OUT		"	A_0 to A = B	9	55	"
		"	139	"		"	"	"	"	"	"	"	"	"	IN	2.4 V	"		"	A_1 to A = B	"	"	"
		"	140	"		"	"	"	"	"	"	"	"	IN	2.4 V	"	"		"	A_2 to A = B	"	"	"
		"	141	"		"	"	"	"	"	"	"	IN	2.4 V	"	"	"		"	A_3 to A = B	"	"	"
		"	142	"		"	"	"	"	"	"	IN	2.4 V	"	"	"	"		"	A_4 to A = B	"	"	"
	t_{PHL4}	"	143	"		"	"	"	"	"	"	2.4 V	"	"	"	IN	"		"	A_0 to A = B	"	"	"
		"	144	"		"	"	"	"	"	"	"	"	"	IN	2.4 V	"		"	A_1 to A = B	"	"	"
		"	145	"		"	"	"	"	"	"	"	"	IN	2.4 V	"	"		"	A_2 to A = B	"	"	"
		"	146	"		"	"	"	"	"	"	"	IN	2.4 V	"	"	"		"	A_3 to A = B	"	"	"
		"	147	"		"	"	"	"	"	"	IN	2.4 V	"	"	"	"		"	A_4 to A = B	"	"	"
	t_{PLH5}	"	148	"		IN	"	"	"	"	"	2.4 V	"	"	"	"	"		"	B_0 to A = B	"	"	"
		"	149	"		2.4 V	IN	"	"	"	"	"	"	"	"	"	"		"	B_1 to A = B	"	"	"
		"	150	"		"	2.4 V	IN	"	"	"	"	"	"	"	"	"		"	B_2 to A = B	"	"	"
		"	151	"		"	"	2.4 V	IN	"	"	"	"	"	"	"	"		"	B_3 to A = B	"	"	"
		"	152	"		"	"	"	2.4 V	IN	"	"	"	"	"	"	"		"	B_4 to A = B	"	"	"
	t_{PHL5}	"	153	"		IN	"	"	"	2.4 V	"	"	"	"	"	"	"		"	B_0 to A = B	"	"	"
		"	154	"		2.4 V	IN	"	"	"	"	"	"	"	"	"	"		"	B_1 to A = B	"	"	"
		"	155	"		"	2.4 V	IN	"	"	"	"	"	"	"	"	"		"	B_2 to A = B	"	"	"
		"	156	"		"	"	2.4 V	IN	"	"	"	"	"	"	"	"		"	B_3 to A = B	"	"	"
		"	157	"		"	"	"	2.4 V	IN	"	"	"	"	"	"	"		"	B_4 to A = B	"	"	"
	t_{PLH6}	"	158	"	OUT	"	"	"	"	2.4 V	"	"	"	"	"	IN			"	A_0 to A < B	6	39	"
	t_{PHL6}	"	159	"	"	"	"	"	"	2.4 V	"	"	"	"	"	IN			"	A_0 to A < B	6	32	"
	t_{PLH7}	"	160	"	"	IN	GND	GND	GND	GND	"	GND	GND	GND	GND	GND			"	B_0 to A < B	3	30	"
	t_{PHL7}	"	161	"	"	IN	"	"	"	"	"	"	"	"	"	GND			"	B_0 to A < B	3	26	"

See footnotes at end of table.

TABLE III. Group A inspection for device type 02 – Continued. 1/

Subgroup	Symbol	MIL-STD-883 method	Cases E,F	1	2	3	4	5	6	7	8	9	10	11	12	13	14	15	16	Measured terminal	Test limits		Unit
			Test no.	E	A<B	B_0	B_1	B_2	B_3	B_4	GND	A_4	A_3	A_2	A_1	A_0	A = B	A > B	V_{CC}		Min	Max	
10 T_C= +125°C	t_{PLH8}	3003 (Fig.5)	162	GND		GND	GND	GND	GND	GND	GND	GND	GND	GND	GND	IN		OUT	5.0V	A_0 to A>B	3	30	ns
	t_{PHL8}	"	163	"		GND	GND	GND	GND	GDN	"	GND	GND	GND	GND	IN		"	"	A_0 to A>B	3	25	"
	t_{PLH9}	"	164	"		IN	2.4V	2.4V	2.4V	2.4V	"	2.4V	2.4V	2.4V	2.4V	2.4V		"	"	B_0 to A>B	6	39	"
	t_{PHL9}	"	165	"		IN	2.4V	2.4V	2.4V	2.4V	"	2.4V	2.4V	2.4V	2.4V	2.4V		"	"	B_0 to A>B	6	35	"
11	Same conditions and limits as subgroup 10, except T_C = -55°C.																						

NOTES:

1/ Pins not designated may be "high" level logic, "low" level logic or open.

2/ Tests shall be performed in sequence.

3/ Output voltages shall be either: (a) H = 2.4 V minimum and L = 0.4 V maximum, when using a high speed checker double comparator; or (b) H ≥ 1.5 V when using a high speed checker single comparator.

5. PACKAGING

5.1 Packaging requirements. For acquisition purposes, the packaging requirements shall be as specified in the contract or order (see 6.2). When packaging of materiel is to be performed by DoD or in-house contractor personnel, these personnel need to contact the responsible packaging activity to ascertain packaging requirements. Packaging requirements are maintained by the Inventory Control Point's packaging activity within the Military Department of Defense Agency, or within the Military Department's System Command. Packaging data retrieval is available from the managing Military Department's or Defense Agency's automated packaging files, CD-ROM products, or by contacting the responsible packaging activity.

6. NOTES

(This section contains information of a general or explanatory nature that may be helpful, but is not mandatory.)

6.1 Intended use. Microcircuits conforming to this specification are intended for original equipment design applications and logistic support of existing equipment.

6.2 Acquisition requirements. Acquisition documents should specify the following:

a. Title, number, and date of the specification.

b. Pin and compliance identifier, if applicable (see 1.2).

c. Requirements for delivery of one copy of the conformance inspection data pertinent to the device inspection lot to be supplied with each shipment by the device manufacturer, if applicable.

d. Requirements for certificate of compliance, if applicable.

e. Requirements for notification of change of product or process to contracting activity in addition to notification to the qualifying activity, if applicable.

f. Requirements for failure analysis (including required test condition of method 5003 of MIL-STD-883), corrective action, and reporting of results, if applicable.

g. Requirements for product assurance options.

h. Requirements for special carriers, lead lengths, or lead forming, if applicable. These requirements should not affect the part number. Unless otherwise specified, these requirements will not apply to direct purchase by or direct shipment to the Government.

i. Requirements for "JAN" marking.

j. Packaging requirements (see 5.1).

6.3 Superseding information. The requirements of MIL-M-38510 have been superseded to take advantage of the available Qualified Manufacturer Listing (QML) system provided by MIL-PRF-38535. Previous references to MIL-M-38510 in this document have been replaced by appropriate references to MIL-PRF-38535. All technical requirements now consist of this specification and MIL-PRF-38535. The MIL-M-38510 specification sheet number and PIN have been retained to avoid adversely impacting existing government logistics systems and contractor's parts lists.

6.4 Qualification. With respect to products requiring qualification, awards will be made only for products which are, at the time of award of contract, qualified for inclusion in Qualified Manufacturers List QML-38535 whether or not such products have actually been so listed by that date. The attention of the contractors is called to these requirements, and manufacturers are urged to arrange to have the products that they propose to offer to the Federal Government tested for qualification in order that they may be eligible to be awarded contracts or purchase orders for the products covered by this specification. Information pertaining to qualification of products may be obtained from DSCC-VQ, 3990 E. Broad Street, Columbus, Ohio 43128-3990.

6.5 Abbreviations, symbols, and definitions. The abbreviations, symbols, and definitions used herein are defined in MIL-PRF-38535, MIL-HDBK-1331, and as follows:

GND ..... Ground zero voltage potential.
I_{IN} ..... Current flowing into an input terminal.
V_{IN} ..... Voltage level at an input terminal.

6.6 Logistic support. Lead materials and finishes (see 3.4) are interchangeable. Unless otherwise specified, microcircuits acquired for Government logistic support will be acquired to device class B (see 1.2.2), lead material and finish A (see 3.4). Longer length leads and lead forming should not affect the part number.

6.7 Substitutability. The cross-reference information below is presented for the convenience of users. Microcircuits covered by this specification will functionally replace the listed generic-industry type. Generic-industry microcircuit types may not have equivalent operational performance characteristics across military temperature ranges or reliability factors equivalent to MIL-M-38510 device types and may have slight physical variations in relation to case size. The presence of this information should not be deemed as permitting substitution of generic-industry types for MIL-M-38510 types or as a waiver of any of the provisions of MIL-PRF-38535.

Military device type	Generic-industry type
01	5485
02	9324

6.8 Manufacturers' designation. Manufacturers' circuits, which form a part of this specification, are designated with an "X" as shown in table IV herein.

TABLE IV. Manufacturer's designator.

Device types	CIRCUITS			
	A	B	C	D
	Fairchild Semiconductor	Motorola	Signetics.	National Semiconductor
01	X	X	X	X
02	X	X		

6.9 Changes from previous issue. Marginal notations are not used in this revision to identify changes with respect to the previous issue due to the extensiveness of the changes.

Custodians:
Army - CR
Navy - EC
Air Force - 11
DLA - CC

Preparing activity:
DLA - CC

(Project 5962-2094)

Review activities:
Army - MI, SM
Navy - AS, CG, MC, SH, TD
Air Force - 03, 19, 99

NOTE: The activities listed above were interested in this document as of the date of this document. Since organizations and responsibilities can change, you should verify the currency of the information above using the ASSIST Online database at http://assist.daps.dla.mil.