INCH POUND

MIL-M-38510/15B
14 April 2005
SUPERSEDING
MIL-M-38510/15A
27 July 1979

MILITARY SPECIFICATION

# MICROCIRCUITS, DIGITAL, TTL, BISTABLE LATCHES, MONOLITHIC SILICON

Inactive for new design after 6 September 1996.

This specification is approved for use by all Departments and Agencies of the Department of Defense.

The requirements for acquiring the product herein shall consist of this specification sheet and MIL-PRF 38535

## 1. SCOPE

1.1 Scope. This specification covers the detail requirements for monolithic, silicon, TTL, 4-bit bistable latch microcircuits. Two product assurance classes and a choice of case outlines and lead finishes are provided for each type and are reflected in the complete part number. For this product, the requirements of MIL-M-38510 have been superseded by MIL-PRF-38535, (see 6.4).

1.2 Part or Identifying Number (PIN). The PIN is in accordance with MIL-PRF-38535, and as specified herein.

1.2.1 Device types. The device types are as follows:

| Device type | Circuit |
|---|---|
| 01 | 4-bit latch, complementary outputs |
| 02 | 4-bit latch |
| 03 | Dual 4-bit latch |
| 04 | 4-bit latch, master reset |

1.2.2 Device class. The device class is the product assurance level as defined in MIL-PRF-38535.

1.2.3 Case outlines. The case outlines are as designated in MIL-STD-1835 and as follows:

| Outline letter | Descriptive designator | Terminals | Package style |
|---|---|---|---|
| A | GDFP5-F14 or CDFP6-F14 | 14 | Flat pack |
| B | GDFP4-F14 | 14 | Flat pack |
| C | GDIP1-T14 or CDIP2-T14 | 14 | Dual-in-line |
| D | GDFP1-F14 or CDFP2-F14 | 14 | Flat pack |
| E | GDIP1-T16 or CDIP2-T16 | 16 | Dual-in-line |
| F | GDFP2-F16 or CDFP3-F16 | 16 | Flat-pack |
| J | GDIP1-T24 or CDIP2-T24 | 24 | Dual-in-line |
| K | GDFP2-F24 or CDFP3-F24 | 24 | Flat-pack |
| L | GDIP3-T24 or CDIP4-T24 | 24 | Dual-in-line |
| Z | GDFP7-F24 or CDFP8-F24 | 24 | Flat-pack |

Comments, suggestions, or questions on this document should be addressed to: Commander, Defense Supply Center Columbus, ATTN: DSCC-VAS, P. O. Box 3990, Columbus, OH 43218-3990, or emailed to bipolar@dscc.dla.mil. Since contact information can change, you may want to verify the currency of this address information using the ASSIST Online database at http://assist.daps.dla.mil.

AMSC N/A FSC 5962

1.3 Absolute maximum ratings.

Supply voltage range ..... -0.5 V dc to +7.0 V dc
Input voltage range ..... -1.5 V dc at -12 mA to +5.5 V dc
Storage temperature range ..... -65°C to +150°C
Maximum power dissipation per gate, ($P_D$) 1/
Device types 01 and 02 ..... 280 mW dc
Device type 03 ..... 630 mW dc
Device type 04 ..... 325 mW dc
Lead temperature (soldering 10 seconds) ..... 300°C
Thermal resistance, junction-to-case ($\theta_{JC}$)..... (See MIL-STD-1835)
Junction temperature ($T_J$) 2/ ..... 175°C

1.4 Recommended operating conditions.

Supply voltage ..... 4.5 V dc minimum to 5.5 V dc maximum
Minimum high level input voltage ..... 2.0 V dc
Maximum low level input voltage ..... 0.8 V dc
Normalized fanout (each output) 3/ ..... 5 maximum
Case operating temperature range ($T_C$) ..... -55°C to 125°C
Setup time, $t_{(SETUP)}$ data to output
Types 01 and 02 ..... 25 ns minimum
Setup time $t_{(SETUP)}$, type 03
Data to enable (high) ..... 10 ns minimum
Data to enable (low) ..... 16 ns minimum
Setup time $t_{(SETUP)}$, type 04
Data to enable (high) ..... 5 ns minimum
Data to enable (low) ..... 25 ns minimum
Setup time, $t_{(SETUP)}$ data to set (high)
Type 04 ..... 8 ns minimum
Input hold time $t_{(HOLD)}$, types 01 and 02
Clock to data ..... 5 ns minimum
Data to clock ..... 30 ns minimum
Input hold time $t_{(HOLD)}$, type 03
Data to enable (high)..... 0 ns maximum
Data to enable (low) ..... 4 ns maximum
Input hold time $t_{(HOLD)}$, type 04
Data to enable (high)..... 0 ns maximum
Data to enable (low) ..... 7 ns maximum
Input hold time $t_{(HOLD)}$, type 04
Data to set (low) ..... 8 ns maximum

2.0 APPLICABLE DOCUMENT

2.1 General. The documents listed in this section are specified in sections 3, 4, or 5 of this specification. This section does not include documents cited in other sections of this specification or recommended for additional information or as examples. While every effort has been made to ensure the completeness of this list, document users are cautioned that they must meet all specified requirements of documents cited in sections 3, 4, or 5 of this specification, whether or not they are listed.

---

1/ Must withstand the added $P_D$ due to short circuit condition (e.g. $I_{OS}$) at one output for 5 seconds duration.
2/ Maximum junction temperature should not be exceeded except in accordance with allowable short duration burn-in screening condition in accordance with MIL-PRF-38535.
3/ Device will fanout in both high and low levels to the specified number of inputs of the same device type as that being tested.

2.2 Government documents.

2.2.1 Specifications and standards. The following specifications and standards form a part of this specification to the extent specified herein. Unless otherwise specified, the issues of these documents are those cited in the solicitation or contract.

DEPARTMENT OF DEFENSE SPECIFICATIONS

MIL-PRF-38535 - Integrated Circuits (Microcircuits) Manufacturing, General Specification for.

DEPARTMENT OF DEFENSE STANDARDS

MIL-STD-883 - Test Method Standard for Microelectronics.
MIL-STD-1835 - Interface Standard Electronic Component Case Outlines

(Copies of these documents are available online at http://assist.daps.dla.mil/quicksearch/ or http://assist.daps.dla.mil or from the Standardization Document Order Desk, 700 Robbins Avenue, Building 4D, Philadelphia, PA 19111-5094.)

2.3 Order of precedence. In the event of a conflict between the text of this specification and the references cited herein, the text of this document takes precedence. Nothing in this document, however, supersedes applicable laws and regulations unless a specific exemption has been obtained.

3. REQUIREMENTS

3.1 Qualification. Microcircuits furnished under this specification shall be products that are manufactured by a manufacturer authorized by the qualifying activity for listing on the applicable qualified manufacturers list before contract award (see 4.3 and 6.3).

3.2 Item requirements. The individual item requirements shall be in accordance with MIL-PRF-38535 and as specified herein or as modified in the device manufacturer's Quality Management (QM) plan. The modification in the QM plan shall not affect the form, fit, or function as described herein.

3.3 Design, construction, and physical dimensions. The design, construction, and physical dimensions shall be as specified in MIL-PRF-38535 and herein.

3.3.1 Terminal connections. The terminal connections shall be as specified on figure 1.

3.3.2 Truth tables and logic equations. The truth tables and logic equations shall be as specified on figure 2.

3.3.3 Logic diagrams. The logic diagrams shall be as specified on figure 3.

3.3.4 Schematic circuit. The schematic circuit shall be maintained by the manufacturer and made available to the qualifying activity and the preparing activity upon request.

3.3.5 Case outlines. Case outlines shall be as specified in 1.2.3.

3.4 Lead material and finish. Lead material and finish shall be in accordance with MIL-PRF-38535 (see 6.6).

3.5 Electrical performance characteristics. The electrical performance characteristics are as specified in table 1 and apply over the full recommended case operating temperature range, unless otherwise specified.

3.6 Electrical test requirements. The electrical test requirements for each device class shall be the subgroups specified in table II. The electrical tests for each subgroup are described in table III.

3.7 Marking. Marking shall be in accordance with MIL-PRF-38535.

3.8 Microcircuit group assignment. The devices covered by this specification shall be in microcircuit group number 5 (see MIL-PRF-38535, appendix A).

TABLE I. Electrical performance characteristics.

| Test | Symbol | Conditions $-55°C \le T_C \le +125°C$ unless otherwise specified | | Device types | Limits Min | Limits Max | Unit |
|---|---|---|---|---|---|---|---|
| High level output voltage | $V_{OH}$ | $V_{CC}$ = 4.5V; $V_{IN}$ = 0.8V | $I_{OH}$ = -400μA | 01, 02 | 2.4 | | V |
| | | | $I_{OH}$ = -800μA | 03, 04 | 2.4 | | V |
| Low level output voltage | $V_{OL}$ | $V_{CC}$ = 4.5V; $V_{IN}$ = 2.0V | $I_{OL}$ = 16 mA | 01,02,04 | | 0.4 | V |
| | | | $I_{OL}$ = 14.4 mA | 03 | | 0.4 | V |
| Input clamp voltage | $V_{IC}$ | $V_{CC}$ = 4.5 V; $V_{IN}$ = -12 mA | | All | | -1.5 | V |
| Low level input current, data | $I_{IL1}$ | $V_{CC}$ = 5.5 V; $V_{IN}$ = 0.4 V | | 01, 02 | -1.4 | -3.2 | mA |
| | | | | 03 4/ | -0.5 | -2.4 | mA |
| | | | | 04 | -0.7 | -2.7 | mA |
| Low level input current | $I_{IL2}$ | $V_{CC}$ = 5.5 V; $V_{IN}$ = 0.4 V 1/ | | | | | |
| Clock | | | | 01, 02 | -2.8 | -6.4 | mA |
| Master reset and enable | | | | 03, 04 | -0.7 | -1.6 | mA |
| Set | | | | 04 | -0.7 | -1.6 | mA |
| High level input current, data | $I_{IH1}$ | $V_{CC}$ = 5.5 V; $V_{IN}$ = 2.4 V 1/ | | 01, 02 | | 80 | μA |
| | | | | 03 | | 40 | μA |
| | | | | 04 | | 60 | μA |
| High level input current, data | $I_{IH2}$ | $V_{CC}$ = 5.5 V; $V_{IN}$ = 5.5 V 1/ | | 01, 02 | | 200 | μA |
| | | | | 03, 04 | | 100 | μA |
| High level input current | $I_{IH3}$ | $V_{CC}$ = 5.5 V; $V_{IN}$ = 2.4 V 1/ | | | | | |
| Clock | | | | 01, 02 | | 160 | μA |
| Master reset and enable | | | | 03, 04 | | 40 | μA |
| Set | | | | 04 | | 40 | μA |
| High level input current | $I_{IH4}$ | $V_{CC}$ = 5.5 V; $V_{IN}$ = 5.5 V 1/ | | | | | |
| Clock | | | | 01, 02 | | 400 | μA |
| Master reset and enable | | | | 03, 04 | | 100 | μA |
| Set | | | | 04 | | 100 | μA |
| Short circuit output current | $I_{OS}$ | $V_{CC}$ = 5.5 V 2/ 3/ | | 01, 02 | -20 | -57 | mA |
| | | | | 03 5/ | -10 | -70 | mA |
| | | | | 04 | -20 | -100 | mA |
| Supply current | $I_{CC}$ | $V_{CC}$ = 5.5 V 2/; $V_{IN}$ = 4.5 V | | 01, 02 | | 46 | mA |
| | | | | 03 | | 106 | mA |
| | | | | 04 | | 55 | mA |
| Propagation delay time for types 01 and 02 | | | | | | | |
| To high level, from D input to Q output | $t_{PLH1}$ | $C_L$ = 50 pF ± 10%; $R_L$ = 390 ohms ± 5% | | 01, 02 | 2 | 44 | ns |
| To high level, from D input to $\overline{Q}$ output | $t_{PLH2}$ | | | 01 | 2 | 55 | ns |
| To low level, from D input to Q output | $t_{PHL1}$ | | | 01, 02 | 2 | 38 | ns |
| To low level, from D input to $\overline{Q}$ output | $t_{PHL2}$ | | | 01 | 2 | 25 | ns |
| To low level, from clock input to Q output | $t_{PHL3}$ | | | 01 | 2 | 25 | ns |

See footnotes at end of table.

TABLE I. Electrical performance characteristics – Continued

| Test | Symbol | Conditions $-55°C \leq T_C \leq +125°C$ unless otherwise specified | Device types | Limits | | Unit |
|---|---|---|---|---|---|---|
| | | | | Min | Max | |
| To high level, from clock input to Q output | $t_{PLH3}$ | $C_L$ = 50 pF ± 10%; $R_L$ = 390 ohms ± 5% | 01, 02 | 2 | 44 | ns |
| To low level, from clock input to $\overline{Q}$ output | $t_{PHL4}$ | | 01 | 2 | 25 | ns |
| To high level from clock input to $\overline{Q}$ output | $t_{PLH4}$ | | 01 | 2 | 44 | ns |
| Propagation delay time for types 03 and 04 | | | | | | |
| To high level, from enable to output | $t_{PLH1}$ | $C_L$ = 50 pF ± 10%; $R_L$ = 390 ohms ± 5% | 03, 04 | 3 | 60 | ns |
| To low level, from enable to output | $t_{PHL1}$ | | 03, 04 | 3 | 40 | ns |
| To high level, from data to output | $t_{PLH2}$ | | 03, 04 | 3 | 49 | ns |
| To low level, from data to output | $t_{PHL2}$ | | 03, 04 | 3 | 37 | ns |
| To low level, from master reset to output | $t_{PHL3}$ | | 03, 04 | 3 | 37 | ns |
| To high level, from set to output | $t_{PLH4}$ | | 04 | 9 | 47 | ns |

1/ All unspecified inputs at 5.5 V.
2/ All unspecified inputs grounded.
3/ Not more than one output should be shorted at a time.
4/ Circuit B limits for $I_{IL1}$ shall be -1.6 mA, maximum.
5/ Circuit B and C limits for $I_{OS}$ shall be -20 mA minimum to -57 mA maximum.

TABLE II. Electrical test requirements.

| MIL-PRF-38535 Test requirement | Subgroups (see table III) | |
|---|---|---|
| | Class S Devices | Class B Devices |
| Interim electrical parameters | 1 | 1 |
| Final electrical test parameters | 1*, 2, 3, 9, 10, 11 | 1*, 2, 3, 9 |
| Group A test requirements | 1, 2, 3, 9, 10, 11 | 1, 2, 3, 9, |
| Group B electrical test parameters when using the method 5005 QCI option | 1, 2, 3 | N/A |
| Groups C end point electrical parameters | 1, 2, 3 | 1, 2, 3 |
| Additional electrical subgroups for Group C periodic inspections | N/A | 10, 11 |
| Group D end point electrical parameters | 1, 2, 3 | 1, 2, 3 |

*PDA applies to subgroup 1.

4. VERIFICATION

4.1 Sampling and inspection. Sampling and inspection procedures shall be in accordance with MIL-PRF-38535 or as modified in the device manufacturer's Quality Management (QM) plan. The modification in the QM plan shall not effect the form, fit, or function as described herein.

4.2 Qualification inspection. Qualification inspection shall be in accordance with MIL-PRF-38535.

4.3 Screening. Screening shall be in accordance with MIL-PRF-38535 and shall be conducted on all devices prior to qualification and conformance inspection. The following additional criteria shall apply:

a. The burn-in test duration, test condition, and test temperature, or approved alternatives shall be as specified in the device manufacturer's QM plan in accordance with MIL-PRF-38535. The burn-in test circuit shall be maintained under document control by the device manufacturer's Technology Review Board (TRB) in accordance with MIL-PRF-38535 and shall be made available to the acquiring or preparing activity upon request. The test circuit shall specify the inputs, outputs, biases, and power dissipation, as applicable, in accordance with the intent specified in test method 1015 of MIL-STD-883.

b. Interim and final electrical test parameters shall be as specified in table II, except interim electrical parameters test prior to burn-in is optional at the discretion of the manufacturer.

c. Additional screening for space level product shall be as specified in MIL-PRF-38535.

4.4 Technology Conformance Inspection (TCI). Technology conformance inspection shall be in accordance with MIL-PRF-38535 and herein for groups A, B, C, and D inspections (see 4.4.1 through 4.4.4).

4.4.1 Group A inspection. Group A inspection shall be in accordance with table III of MIL-PRF-38535 and as follows:

a. Tests shall be as specified in table II herein.

b. Subgroups 4, 5, 6, 7, and 8 shall be omitted.

4.4.2 Group B inspection. Group B inspection shall be in accordance with table II of MIL-PRF-38535.

4.4.3 Group C inspection. Group C inspection shall be in accordance with table IV of MIL-PRF-38535 and as follows:

a. End point electrical parameters shall be as specified in table II *herein*.

b. Subgroups 3 and 4 shall be added to the group C inspection requirements for class B devices and shall consist of the tests, conditions, and limits specified for subgroups 10 and 11 of group A.

c. The steady-state life test duration, test condition, and test temperature, or approved alternatives shall be as specified in the device manufacturer's QM plan in accordance with MIL-PRF-38535. The burn-in test circuit shall be maintained under document control by the device manufacturer's Technology Review Board (TRB) in accordance with MIL-PRF-38535 and shall be made available to the acquiring or preparing activity upon request. The test circuit shall specify the inputs, outputs, biases, and power dissipation, as applicable, in accordance with the intent specified in test method 1005 of MIL-STD-883.

4.4.4 Group D inspection. Group D inspection shall be in accordance with table V of MIL-PRF-38535. End-point electrical parameters shall be as specified in table II herein.

4.5 Methods of inspection. Methods of inspection shall be as specified in the appropriate tables and as follows:

4.5.1 Voltage and current. All voltages given are referenced to the microcircuit ground terminal. Currents given are conventional current and positive when flowing into the referenced terminal.

| Terminal number | Device type 01<br>Cases E and F | Device type 02<br>Cases A, B, C and D | Device type 03<br>Cases J, K, L and Z | Device type 04<br>Cases E and F |
|---|---|---|---|---|
| 1 | 1 $\overline{Q}$ | 1D | $\overline{MR}$ | $\overline{E}$ |
| 2 | 1D | 2D | $\overline{E}$ 0 | $\overline{S}$ 0 |
| 3 | 2D | CLOCK 3-4 | $\overline{E}$ 1 | D0 |
| 4 | CLOCK 3-4 | $V_{CC}$ | D0 | D1 |
| 5 | $V_{CC}$ | 3D | Q0 | $\overline{S}$ 2 |
| 6 | 3D | 4D | D1 | D2 |
| 7 | 4D | NC | Q1 | D3 |
| 8 | 4 $\overline{Q}$ | 4Q | D2 | GND |
| 9 | 4Q | 3Q | Q2 | $\overline{MR}$ |
| 10 | 3Q | NC | D3 | Q3 |
| 11 | 3 $\overline{Q}$ | GND | Q3 | $\overline{S}$ 3 |
| 12 | GND | CLOCK 1-2 | GND | Q2 |
| 13 | CLOCK 1-2 | 2Q | $\overline{MR}$ | Q1 |
| 14 | 2 $\overline{Q}$ | 1Q | $\overline{E}$ 0 | $\overline{S}$ 1 |
| 15 | 2Q | | $\overline{E}$ 1 | Q0 |
| 16 | 1Q | | D0 | $V_{CC}$ |
| 17 | | | Q0 | |
| 18 | | | D1 | |
| 19 | | | Q1 | |
| 20 | | | D2 | |
| 21 | | | Q2 | |
| 22 | | | D3 | |
| 23 | | | Q3 | |
| 24 | | | $V_{CC}$ | |

Figure 1. Terminal connections.

Device types 01 and 02

| Truth table | |
|---|---|
| tn | tn+1 |
| D | Q |
| H | H |
| L | L |

NOTES:
1. tn = bit time before clock negative-going transition.
2. tn+1 = bit time after clock negative-going transition.

Device type 03

| Truth table | | | | | |
|---|---|---|---|---|---|
| $\overline{MR}$ | $\overline{E}$ 0 | $\overline{E}$ 1 | D | Qn | Operation |
| H | L | L | L | L | Data entry |
| H | L | L | H | H | Data entry |
| H | L | H | X | Qn-1 | Hold |
| H | H | L | X | Qn-1 | Hold |
| H | H | H | X | Qn-1 | Hold |
| L | X | X | X | L | reset |

X = Don't care
L = Low voltage level
H = High voltage level
Qn-1 = Previous output state
Qn = Present output state

Device type 04

| Truth table | | | | | |
|---|---|---|---|---|---|
| $\overline{MR}$ | $\overline{E}$ | D | $\overline{S}$ | Qn | Operation |
| H | L | L | L | L | D mode |
| H | L | H | L | H | |
| H | H | X | X | Qn-1 | |
| H | L | L | L | L | R/S mode |
| H | L | H | L | H | |
| H | L | L | H | L | |
| H | L | H | H | Qn-1 | |
| H | H | X | X | Qn-1 | |
| L | X | X | X | L | Reset |

X = Don't care
L = Low voltage level
H = High voltage level
Qn-1 = Previous output state
Qn = Present output state

Figure 2. Truth tables.

Device type 01

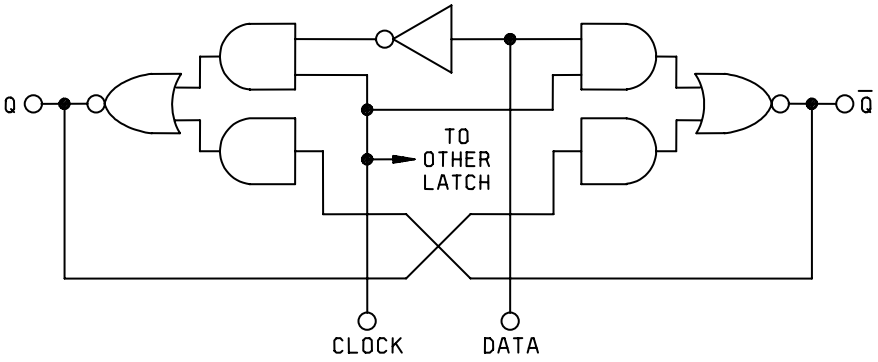


Device type 02

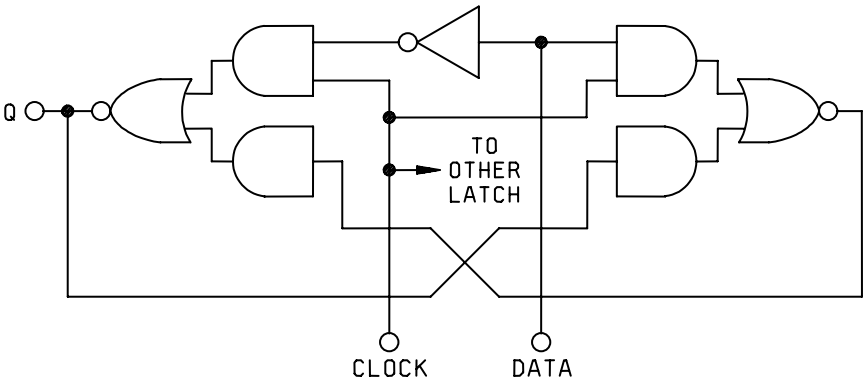


Figure 3. Logic diagrams.

Device type 03

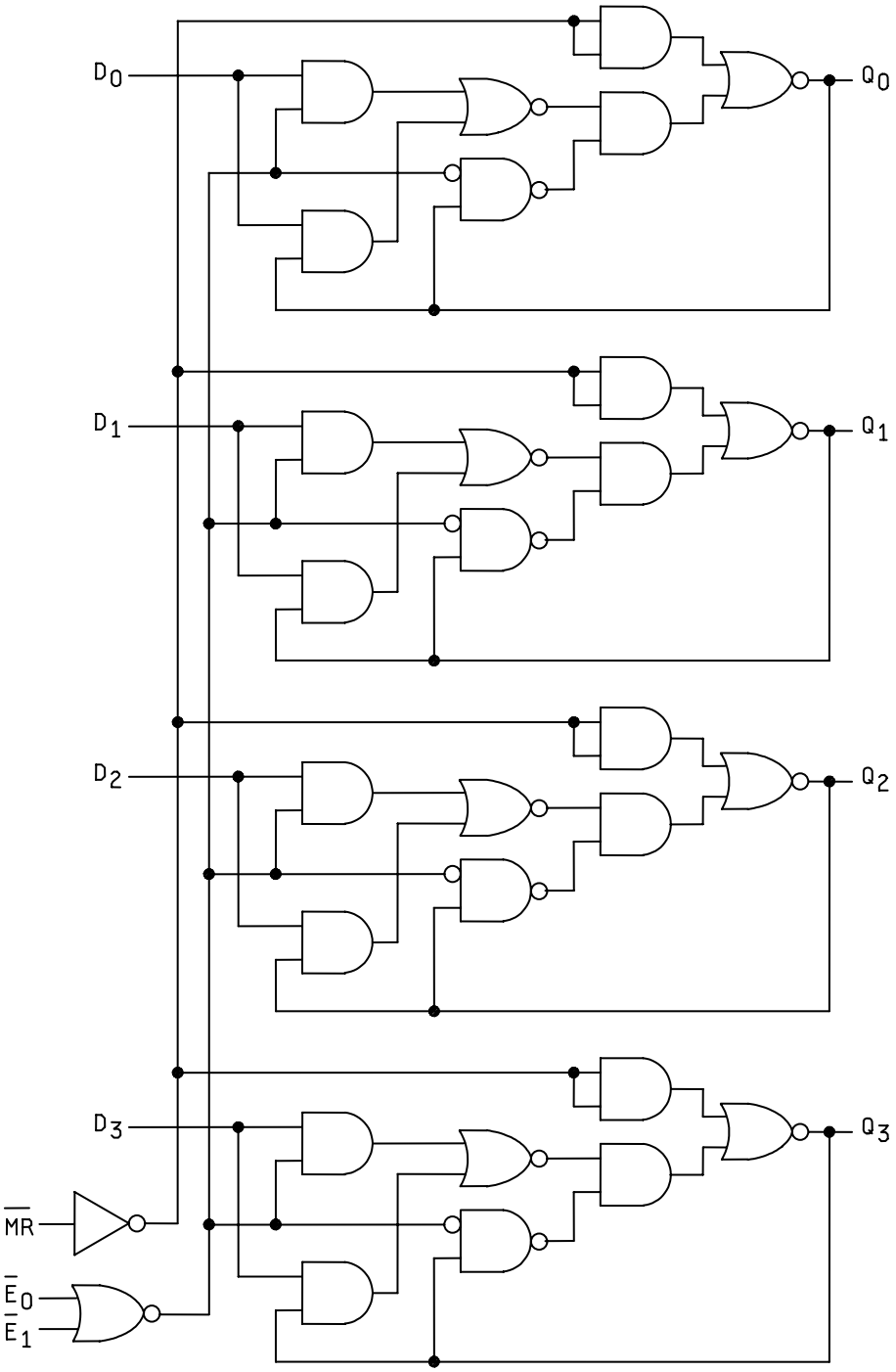


Figure 3. Logic diagrams – Continued.

Device type 04

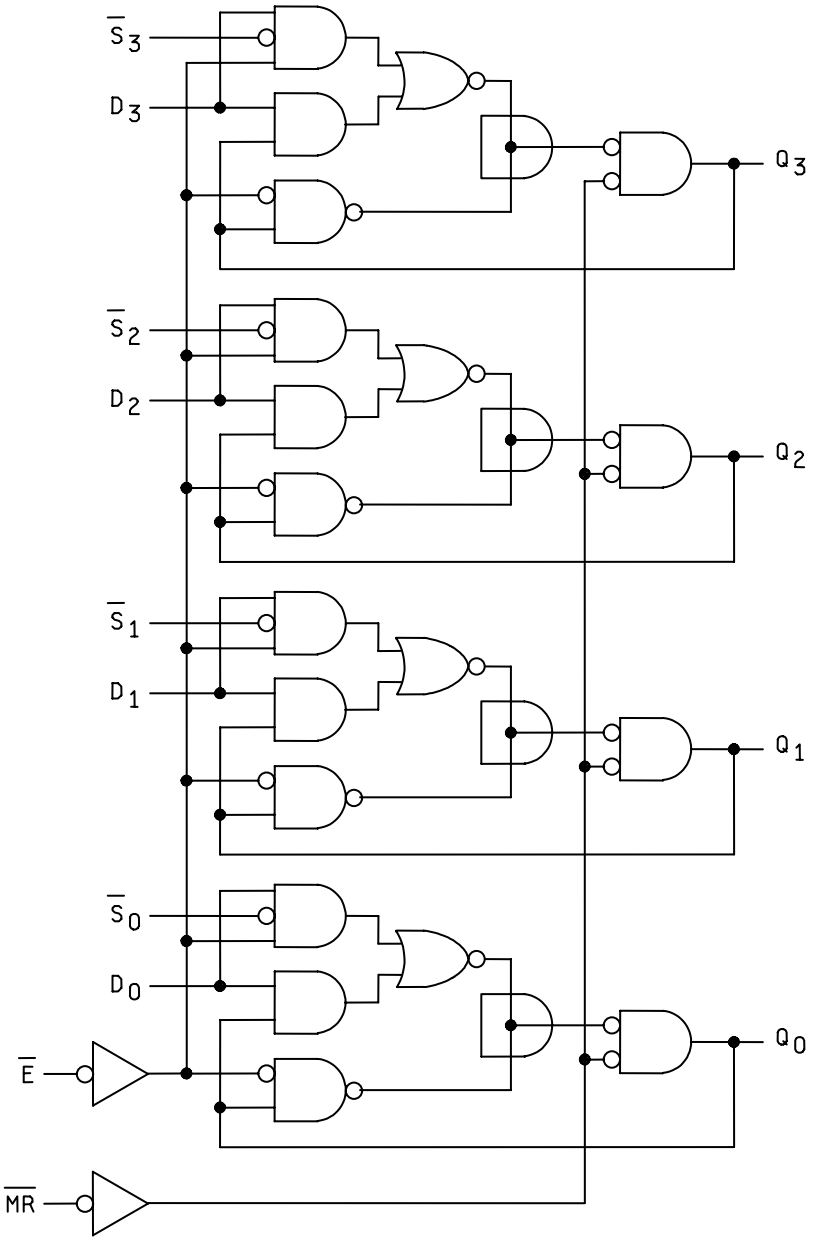


Figure 3. Logic diagrams – Continued.

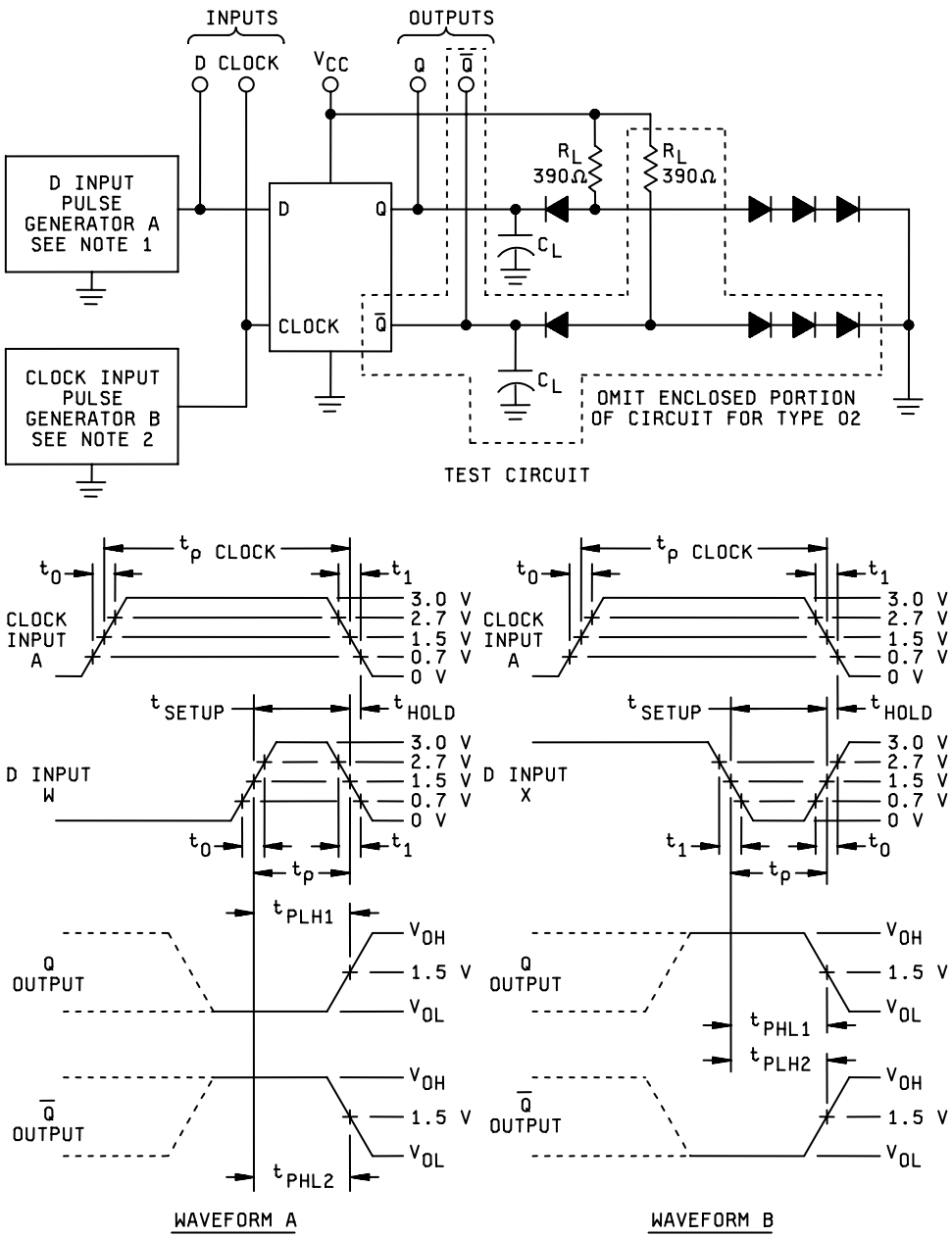


NOTES:

1. The D input pulse generator has the following characteristics: $V_{GEN}$ = 3 V, $t_1 = t_0 \leq 10$ ns, $t_P$ = 30 ns, $t_{(SETUP)}$ = 25 ns, $t_{(HOLD)}$ = 5 ns, PRR = 1 MHz and $Z_{OUT} \approx 50\ \Omega$.
2. The clock pulse generator has the following characteristics: $V_{GEN}$ = 3 V minimum, $t_1 = t_0 \leq 10$ ns, $t_{P(CLOCK)}$ = 500 ns, and PRR = 1 MHz.
3. Prior to testing the device shall be precondition to a high logic level for waveform A and to a low logic level for waveform B.
4. Each latch is tested separately.
5. $C_L$ = 50 pF, which includes probe and jig capacitance.
6. $R_L = 390\ \Omega \pm 5\%$.
7. The $\overline{Q}$ waveforms are not applicable to type 02.
8. All diodes are 1N3064 or equivalent.

Figure 4. Switching test circuit and data to output waveforms for device types 01 and 02.

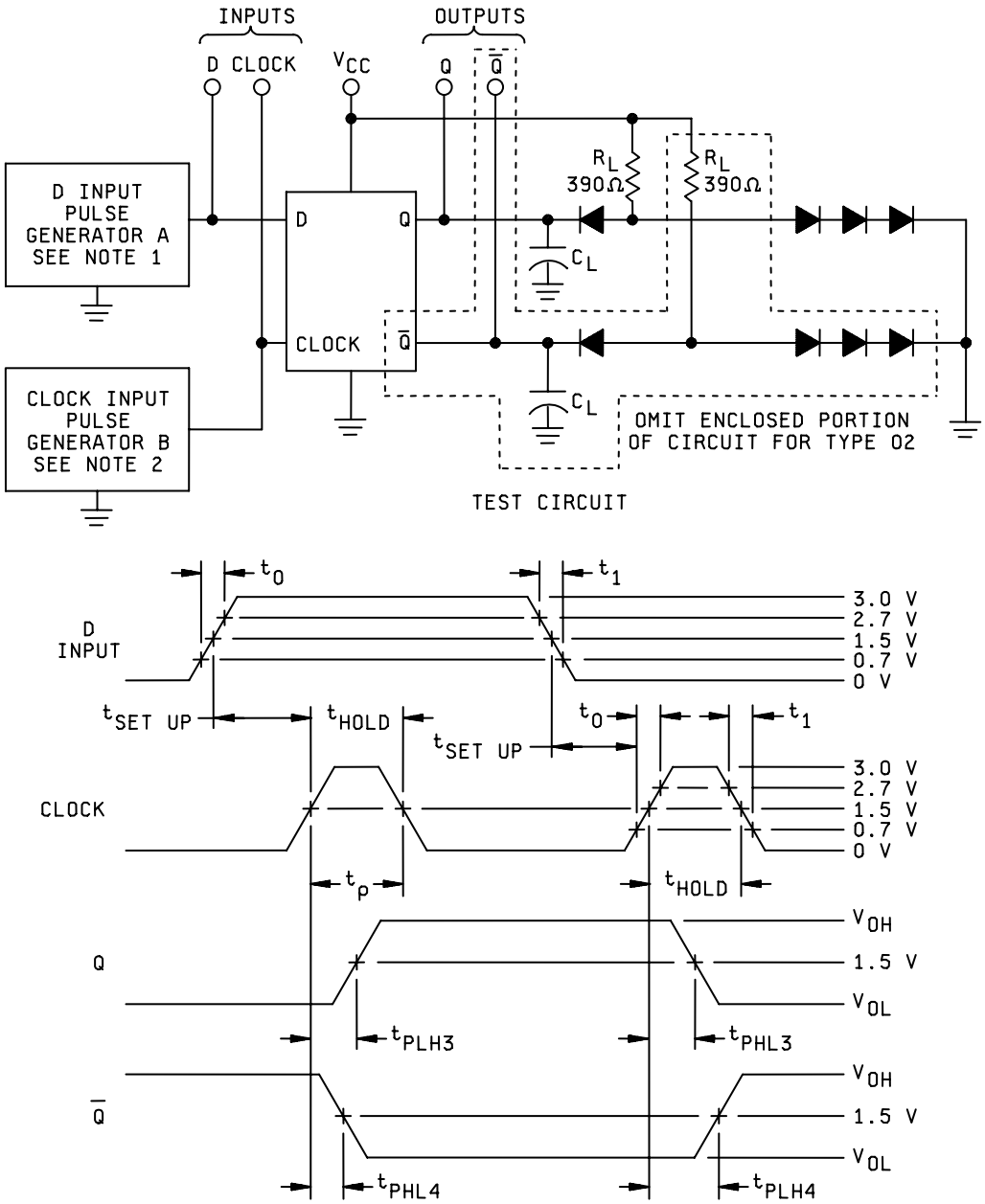


NOTES:

1. The D input pulse generator has the following characteristics: $V_{GEN}$ = 3 V, $t_1 = t_0 \leq 10$ ns, PRR = 500 kHz at 50 % duty cycle. For subgroups 7 and 8, PRR ≤ 25 kHz at 50 % cuty cycle and PRR (D input) = 1/2 PRR (clock).
2. The clock pulse generator has the following characteristics: $V_{GEN}$ = 3 V minimum, $t_1 = t_0 \leq 10$ ns, $t_{(HOLD)} = t_{P(CLOCK)}$ = 30 ns, $t_{(SETUP)}$ = 25 ns and PRR = 1 MHz. For subgroups 7 and 8, PRR ≤ 50 kHz.
3. Each latch is tested separately.
4. $C_L$ = 50 pF, which includes probe and jig capacitance.
5. $R_L$ = 390 Ω ±5%.
6. The $\overline{Q}$ waveforms are not applicable to device type 02.
7. All diodes are 1N3064 or equivalent.

Figure 5. Switching test circuit and clock to output waveforms for device types 01 and 02.

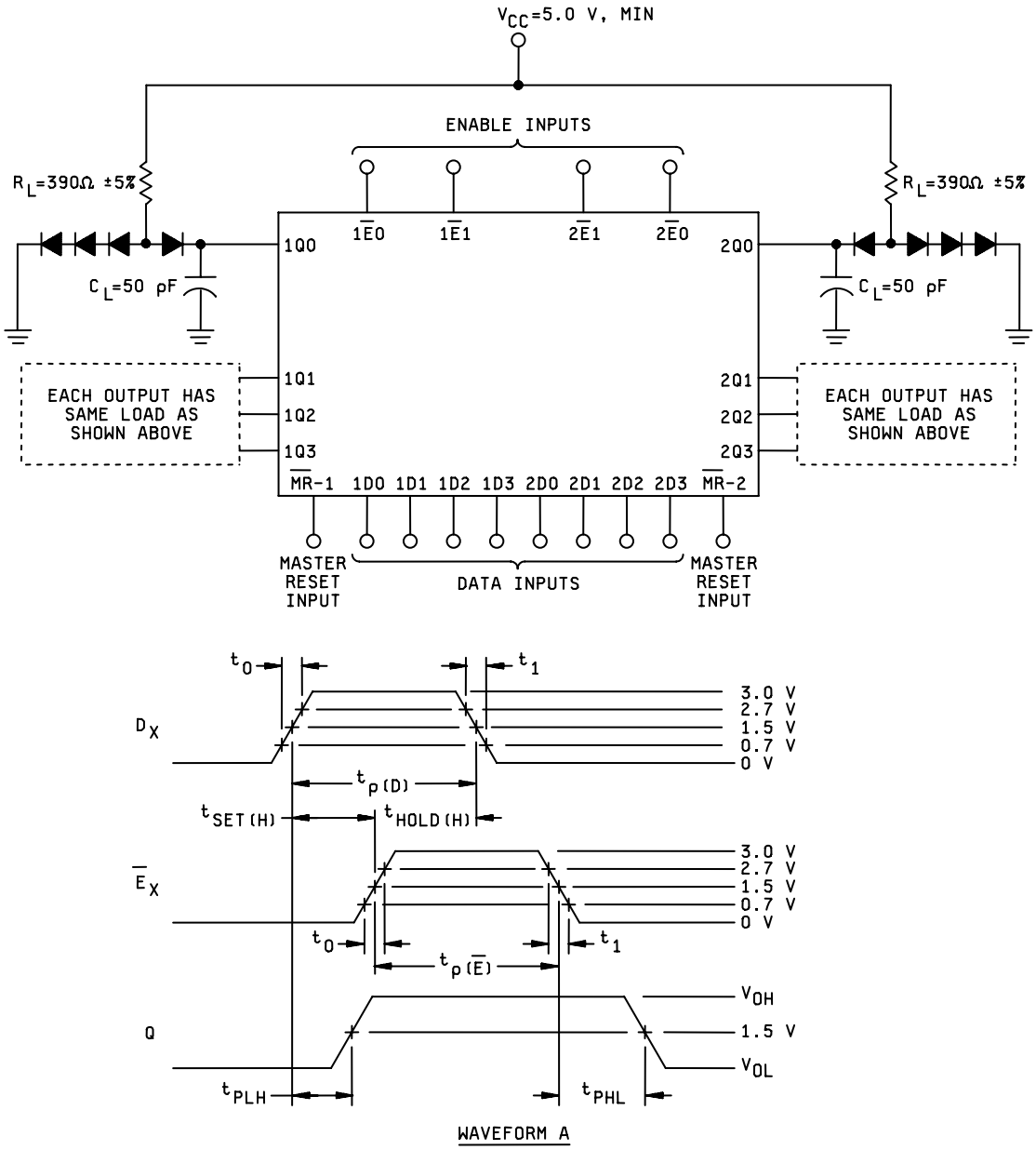


NOTES:

1. The data inputs have the following characteristics: $V_{GEN}$ = 3 V, $t_1 = t_0 \leq 10$ ns, $t_{P(D)}$ = 10 ns, PRR = 1 MHz.
2. The enable inputs have the following characteristics: $V_{GEN}$ = 3 V, $t_1 = t_0 \leq 10$ ns, $t_{SET(H)}$ = 10 ns, $t_{HOLD(H)}$ = 0 ns, $t_{P(E)}$ = 20 ns, PRR = 1 MHz and $Z_{OUT} \approx 50\Omega$ .
3. Each latch is tested separately.
4. $C_L$ = 50 pF, which includes probe and jig capacitance.
5. $R_L$ = 390 Ω ±5%.
6. All diodes are 1N3064 or equivalent.

Figure 6. Switching time test circuit and waveforms for device type 03.

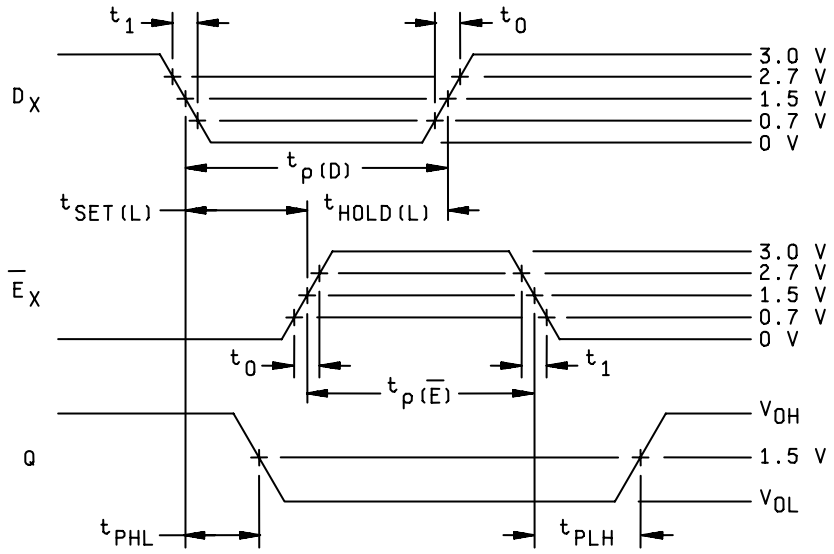


WAVEFORM B

NOTES:

1. The master reset inputs have the following characteristics: $V_{GEN}$ = 3 V, $t_0 = t_1 \leq 10$ ns, $t_{P(D)}$ = 26 ns and PRR = 1 MHz.
2. The enable inputs have the following characteristics: $V_{GEN}$ = 3 V, $t_1 = t_0 \leq 10$ ns, $t_{SET(L)}$ = 16 ns, $t_{HOLD(L)}$ = 10 ns, $t_{P(\overline{E})}$ = 20 ns, PRR = 1 MHz and $Z_{OUT} \approx 50\Omega$ .

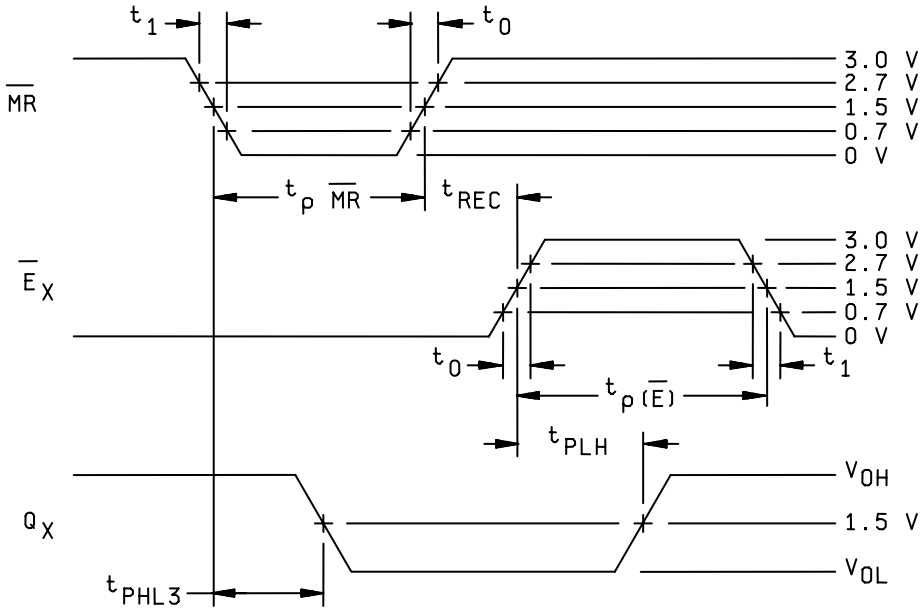


WAVEFORM C

NOTES:

1. The master reset inputs have the following characteristics: $V_{GEN}$ = 3 V, $t_0 = t_1 \leq 10$ ns, $t_{P(\overline{MR})}$ = 20 ns and PRR = 1 MHz.
2. The enable inputs have the following characteristics: $V_{GEN}$ = 3 V, $t_1 = t_0 \leq 10$ ns, $t_{REC}$ = 10 ns, $t_{P(\overline{E})}$ = 20 ns, PRR = 1 MHz and $Z_{OUT} \approx 50\Omega$ .

Figure 6. Switching time test circuit and waveforms for device type 03.

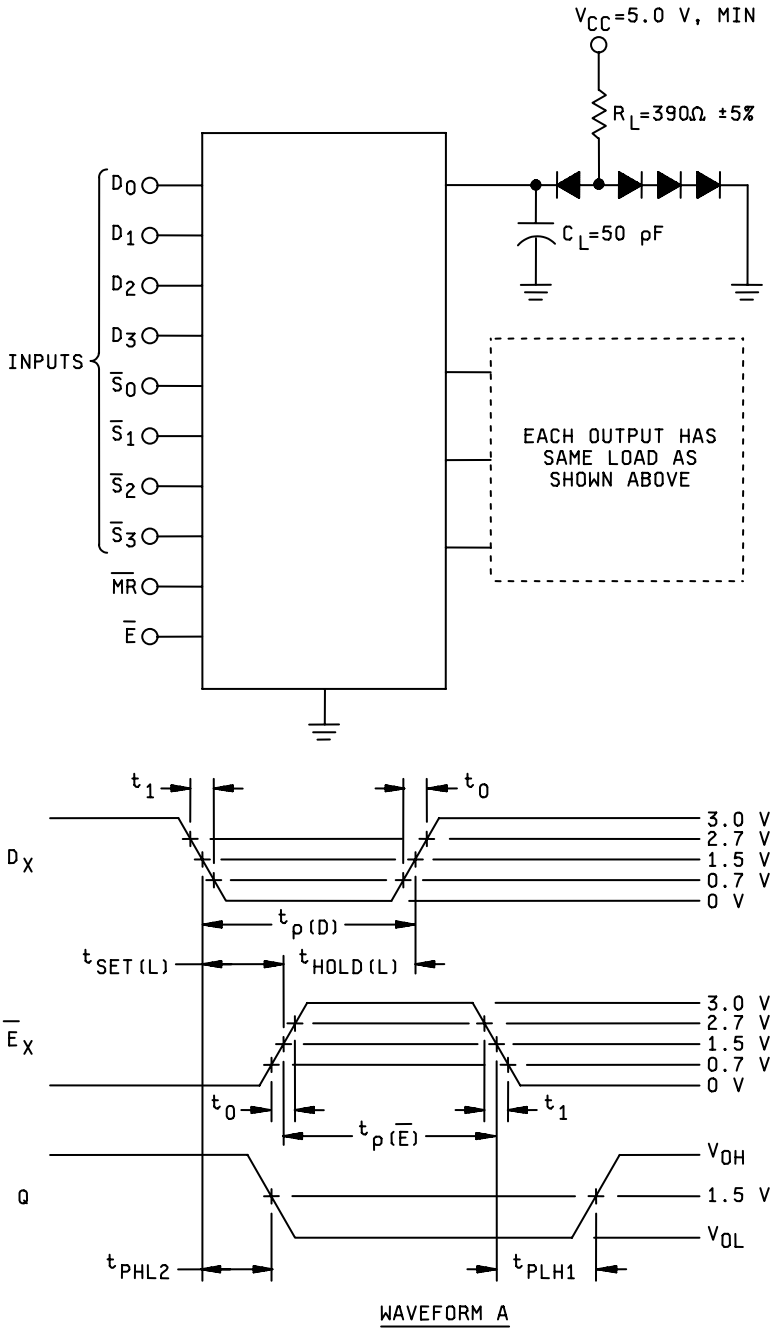


NOTES:

1. The data inputs have the following characteristics: $V_{GEN}$ = 3 V, $t_1 = t_0 \leq 10$ ns, $t_{P(D)}$ = 32 ns, PRR = 1 MHz.
2. The enable input has the following characteristics: $V_{GEN}$ = 3 V, $t_1 = t_0 \leq 10$ ns, $t_{P(E)}$ = 20 ns, $t_{SET(L)}$ = 25 ns, $t_{HOLD(L)}$ = 7 ns, PRR = 1 MHz and $Z_{OUT} \approx 50\Omega$ .
3. Each latch is tested separately.
4. $C_L$ = 50 pF, which includes probe and jig capacitance.
5. $R_L$ = 390 Ω ±5%.
6. All diodes are 1N3064 or equivalent.

Figure 7. Switching time test circuit and waveforms for device type 04.

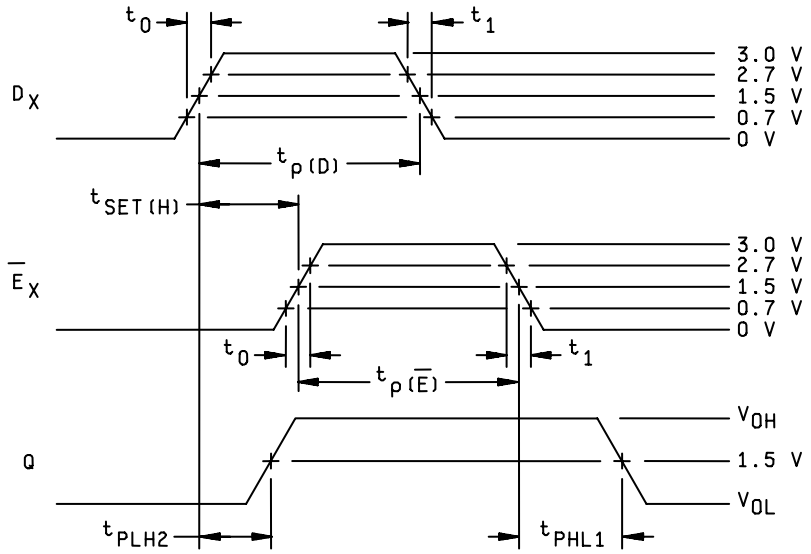


WAVEFORM B

NOTES:

1. The data inputs have the following characteristics: $V_{GEN}$ = 3 V, $t_0 = t_1 \leq 10$ ns, $t_{P(D)}$ = 20 ns and PRR = 1 MHz.
2. The enable input has the following characteristics: $V_{GEN}$ = 3 V, $t_1 = t_0 \leq 10$ ns, $t_{P(\overline{E})}$ = 20 ns, $t_{SET(H)}$ = 5 ns, PRR = 1 MHz and $Z_{OUT} \approx 50\Omega$ .

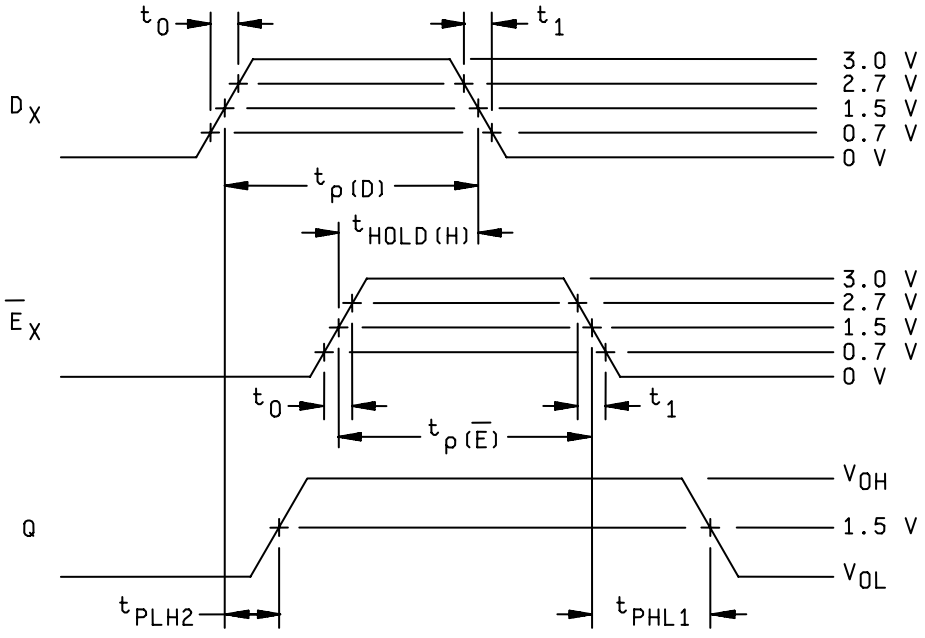


WAVEFORM C

NOTES:

1. The data inputs have the following characteristics: $V_{GEN}$ = 3 V, $t_0 = t_1 \leq 10$ ns, $t_{P(D)}$ = 20 ns and PRR = 1 MHz.
2. The enable inputs have the following characteristics: $V_{GEN}$ = 3 V, $t_1 = t_0 \leq 10$ ns, $t_{P(\overline{E})}$ = 20 ns, $t_{HOLD(H)}$ = 0 ns, PRR = 1 MHz and $Z_{OUT} \approx 50\Omega$ .

Figure 7. Switching time test circuit and waveforms for device type 04.

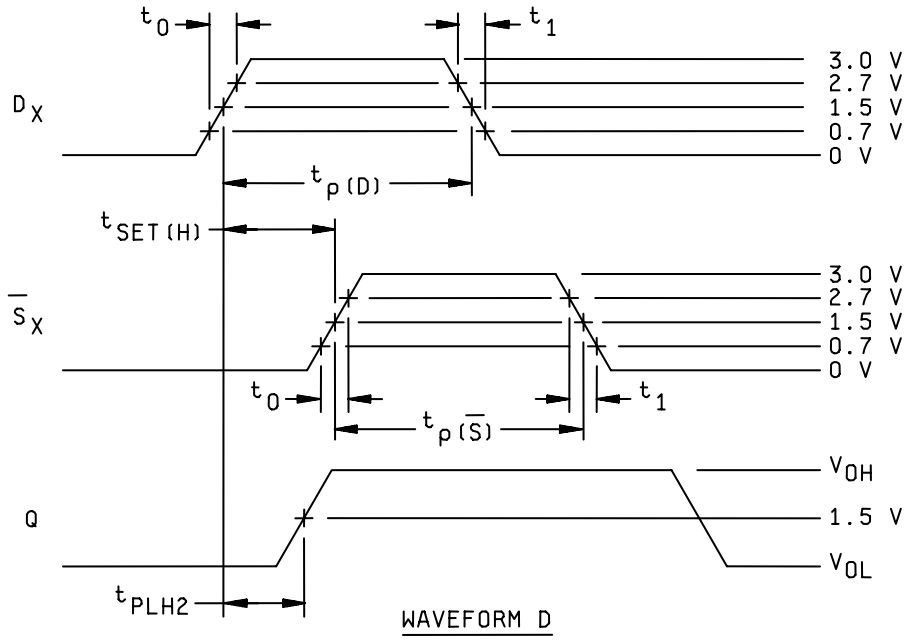


NOTES:

1. The data inputs have the following characteristics: $V_{GEN}$ = 3 V, $t_0 = t_1 \leq 10$ ns, $t_{P(D)}$ = 20 ns and PRR = 1 MHz.
2. The set inputs have the following characteristics: $V_{GEN}$ = 3 V, $t_1 = t_0 \leq 10$ ns, $t_{P(\bar{S})}$ = 20 ns, $t_{SET(H)}$ = 8 ns, PRR = 1 MHz and $Z_{OUT} \approx 50\Omega$ .

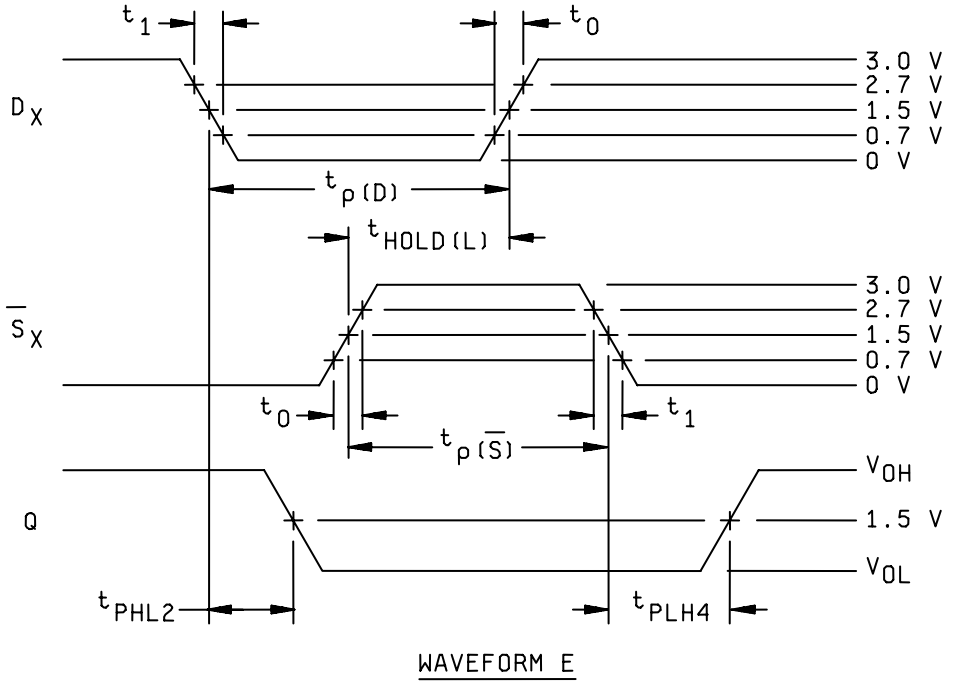


NOTES:

1. The data inputs have the following characteristics: $V_{GEN}$ = 3 V, $t_0 = t_1 \leq 10$ ns, $t_{P(D)}$ = 20 ns and PRR = 1 MHz.
2. The set inputs have the following characteristics: $V_{GEN}$ = 3 V, $t_1 = t_0 \leq 10$ ns, $t_{P(\bar{S})}$ = 20 ns, $t_{HOLD(L)}$ = 8 ns, PRR = 1 MHz and $Z_{OUT} \approx 50\Omega$ .

Figure 7. Switching time test circuit and waveforms for device type 04.

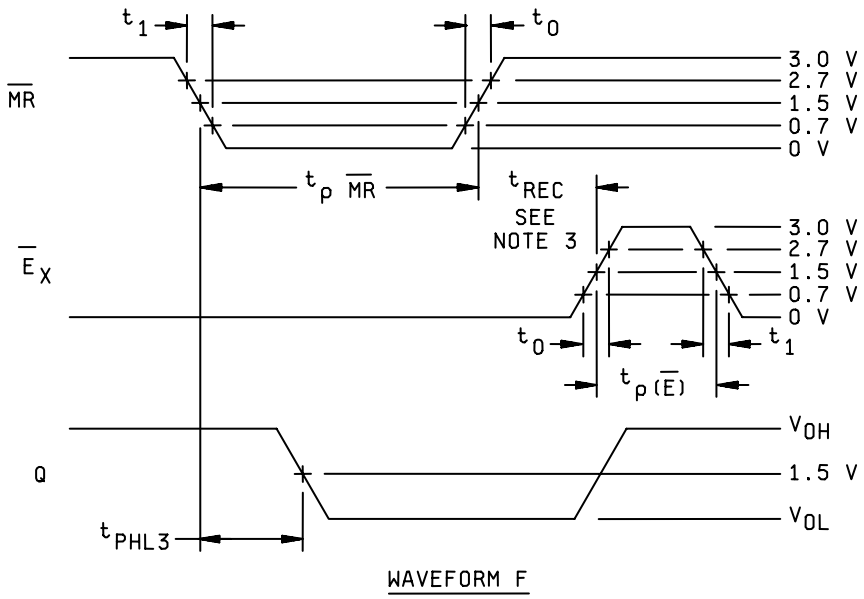


NOTES:

1. The master reset input has the following characteristics: $V_{GEN}$ = 3 V, $t_0 = t_1 \leq 10$ ns, $t_{P(\overline{MR})}$ = 18 ns and PRR = 1 MHz.
2. The enable inputs have the following characteristics: $V_{GEN}$ = 3 V, $t_1 = t_0 \leq 10$ ns, $t_{P(\overline{E})}$ = 20 ns, $t_{REC}$ = 0 ns, PRR = 1 MHz and $Z_{OUT} \approx 50\Omega$ .
3. Recovery time is the minimum time that enable must remain low after the master reset transition from low to high in order for the latch to recognize and store high data.

Figure 7. Switching time test circuit and waveforms for device type 04.

TABLE III. Group A inspection for device type 01.
Terminal conditions (pins not designated may be H ≥ 2.0 V or L ≤ 0.8 V or open).

| Subgroup | Symbol | MIL-STD-883 method | Cases E, F | 1 | 2 | 3 | 4 | 5 | 6 | 7 | 8 | 9 | 10 | 11 | 12 | 13 | 14 | 15 | 16 | Meas. terminal | Test limits | | |
|---|---|---|---|---|---|---|---|---|---|---|---|---|---|---|---|---|---|---|---|---|---|---|---|
| | | | Test No. | 1 $\overline{Q}$ | 1D | 2D | CLOCK 3-4 | $V_{CC}$ | 3D | 4D | 4 $\overline{Q}$ | 4Q | 3Q | 3 $\overline{Q}$ | GND | CLOCK 1-2 | 2 $\overline{Q}$ | 2Q | 1Q | | Min | Max | Unit |
| 1 | $V_{OH}$ | 3006 | 1 | -0.4 mA | 0.8 V | | | 4.5 V | | | | | | | GND | 2.0 V | | | | 1 $\overline{Q}$ | 2.4 | | V |
| $T_C$ = 25°C | " | " | 2 | | 2.0 V | | | " | | | | | | | " | " | | | -0.4 mA | 1Q | " | | " |
| " | " | " | 3 | | | 0.8 V | | " | | | | | | | " | " | -0.4 mA | | | 2 $\overline{Q}$ | " | | " |
| " | " | " | 4 | | | 2.0 V | | " | | | | | | | " | " | | -0.4 mA | | 2Q | " | | " |
| " | " | " | 5 | | | | 2.0 V | " | 0.8 V | | | | | -0.4 mA | " | | | | | 3 $\overline{Q}$ | " | | " |
| " | " | " | 6 | | | | " | " | 2.0 V | | | | -0.4 mA | | " | | | | | 3Q | " | | " |
| " | " | " | 7 | | | | " | " | | 0.8 V | -0.4 mA | | | | " | | | | | 4 $\overline{Q}$ | " | | " |
| " | " | " | 8 | | | | " | " | | 2.0 V | | -0.4 mA | | | " | | | | | 4Q | " | | " |
| | $V_{OL}$ | 3007 | 9 | 16 mA | 2.0 V | | | " | | | | | | | " | 2.0 V | | | | 1 $\overline{Q}$ | | 0.4 | " |
| | " | " | 10 | | 0.8 V | | | " | | | | | | | " | " | | | 16 mA | 1Q | | " | " |
| | " | " | 11 | | | 2.0 V | | " | | | | | | | " | " | 16 mA | | | 2 $\overline{Q}$ | | " | " |
| | " | " | 12 | | | 0.8 V | | " | | | | | | | " | " | | 16 mA | | 2Q | | " | " |
| | " | " | 13 | | | | 2.0 V | " | 2.0 V | | | | | 16 mA | " | | | | | 3 $\overline{Q}$ | | " | " |
| | " | " | 14 | | | | " | " | 0.8 V | | | | 16 mA | | " | | | | | 3Q | | " | " |
| | " | " | 15 | | | | " | " | | 2.0 V | 16 mA | | | | " | | | | | 4 $\overline{Q}$ | | " | " |
| | " | " | 16 | | | | " | " | | 0.8 V | | 16 mA | | | " | | | | | 4Q | | " | " |
| | $I_{IL1}$ | 3009 | 17 | | 0.4 V | | | 5.5 V | | | | | | | " | 4.5 V | | | | 1D | -1.4 | -3.2 | mA |
| | " | " | 18 | | | 0.4 V | | " | | | | | | | " | 4.5 V | | | | 2D | " | " | " |
| | " | " | 19 | | | | 4.5 V | " | 0.4 V | | | | | | " | | | | | 3D | " | " | " |
| | " | " | 20 | | | | 4.5 V | " | | 0.4 V | | | | | " | | | | | 4D | " | " | " |
| | $I_{IL2}$ | " | 21 | | 0.8 V | 0.8 V | | " | | | | | | | " | 0.4 V | | | | CLK 1-2 | -2.8 | -6.4 | " |
| | $I_{IL2}$ | " | 22 | | | | 0.4 V | " | 0.8 V | 0.8 V | | | | | " | | | | | CLK 3-4 | -2.8 | -6.4 | " |
| | $I_{IH1}$ | 3010 | 23 | | 2.4 V | | | " | | | | | | | " | GND | | | | 1D | | 80 | μA |
| | " | " | 24 | | | 2.4 V | | " | | | | | | | " | GND | | | | 2D | | " | " |
| | " | " | 25 | | | | GND | " | 2.4 V | | | | | | " | | | | | 3D | | " | " |
| | " | " | 26 | | | | GND | " | | 2.4 V | | | | | " | | | | | 4D | | " | " |
| | $I_{IH2}$ | " | 27 | | 5.5 V | | | " | | | | | | | " | GND | | | | 1D | | 200 | " |
| | " | " | 28 | | | 5.5 V | | " | | | | | | | " | GND | | | | 2D | | " | " |
| | " | " | 29 | | | | GND | " | 5.5 V | | | | | | " | | | | | 3D | | " | " |
| | " | " | 30 | | | | GND | " | | 5.5 V | | | | | " | | | | | 4D | | " | " |
| | $I_{IH3}$ | " | 31 | | GND | GND | | " | | | | | | | " | 2.4 V | | | | CLK 1-2 | | 160 | " |
| | $I_{IH3}$ | " | 32 | | | | 2.4 V | " | GND | GND | | | | | " | | | | | CLK 3-4 | | 160 | " |
| | $I_{IH4}$ | " | 33 | | GND | GND | | " | | | | | | | " | 5.5 V | | | | CLK 1-2 | | 400 | " |
| | $I_{IH4}$ | " | 34 | | | | 5.5 V | " | GND | GND | | | | | " | | | | | CLK 3-4 | | 400 | " |

See footnotes at end of device type 01.

TABLE III. Group A inspection for device type 01.
Terminal conditions (pins not designated may be H ≥ 2.0 V or L ≤ 0.8 V or open).

| Subgroup | Symbol | MIL-STD-883 method | Cases E, F Test No. | 1 $1\overline{Q}$ | 2 1D | 3 2D | 4 CLOCK 3-4 | 5 $V_{CC}$ | 6 3D | 7 4D | 8 $4\overline{Q}$ | 9 4Q | 10 3Q | 11 $3\overline{Q}$ | 12 GND | 13 CLOCK 1-2 | 14 $2\overline{Q}$ | 15 2Q | 16 1Q | Meas. terminal | Test limits Min | Max | Unit |
|---|---|---|---|---|---|---|---|---|---|---|---|---|---|---|---|---|---|---|---|---|---|---|---|
| 1 | $I_{OS}$ | 3011 | 35 | GND | GND | | | 5..5 V | | | | | | | GND | 4.5 V | | | | $1\overline{Q}$ | -20 | -57 | mA |
| $T_C$ = 25°C | " | " | 36 | | 4.5 V | | | " | | | | | | | " | " | | | GND | 1Q | " | " | " |
| | " | " | 37 | | | GND | | " | | | | | | | " | " | GND | | | $2\overline{Q}$ | " | " | " |
| | " | " | 38 | | | 4.5 V | | " | | | | | | | " | " | | GND | | 2Q | " | " | " |
| | " | " | 39 | | | | 4.5 V | " | GND | | | | | GND | " | | | | | $3\overline{Q}$ | " | " | " |
| | " | " | 40 | | | | " | " | 4.5 V | | | | GND | | " | | | | | 3Q | " | " | " |
| | " | " | 41 | | | | " | " | | GND | GND | | | | " | | | | | $4\overline{Q}$ | " | " | " |
| | " | " | 42 | | | | " | " | | 4.5 V | | GND | | | " | | | | | 4Q | " | " | " |
| | $I_{CC}$ | 3005 | 43 | | GND | GND | GND | " | GND | GND | | | | | " | GND | | | | $V_{CC}$ | | 46 | " |
| | $V_{IC}$ | | 44 | | -12 mA | | | 4.5 V | | | | | | | " | | | | | 1D | | -1.5 | V |
| | " | | 45 | | | | | " | | | | | | | " | -12 mA | | | | CLK 1-2 | | " | " |
| | " | | 46 | | | -12 mA | | " | | | | | | | " | | | | | 2D | | " | " |
| | " | | 47 | | | | | " | -12 mA | | | | | | " | | | | | 3D | | " | " |
| | " | | 48 | | | | -12 mA | " | | | | | | | " | | | | | CLK 3-4 | | " | " |
| | " | | 49 | | | | | " | | -12 mA | | | | | " | | | | | 4D | | " | " |
| 2 | Same tests, terminal conditions and limits as for subgroup 1, except $T_C$ = 125°C and $V_{IC}$ tests are omitted. | | | | | | | | | | | | | | | | | | | | | | |
| 3 | Same tests, terminal conditions and limits as for subgroup 1, except $T_C$ = -55°C and $V_{IC}$ tests are omitted. | | | | | | | | | | | | | | | | | | | | | | |
| 7 1/ | Truth | 3014 | 50 | | B | B | B | 5.0 V | B | B | | | | | GND | B | | | | | | | |
| $T_C$ = 25°C | table | " | 51 | | B | B | A | " | B | B | | | | | " | A | | | | | | | |
| | test | " | 52 | | A | A | A | " | A | A | | | | | " | A | | | | | | | |
| | " | " | 53 | L | A | A | B | " | A | A | L | H | H | L | " | B | L | H | H | | | | |
| | " | " | 54 | | A | A | B | " | A | A | | | | | " | B | | | | | 2/ | | |
| | " | " | 55 | | A | A | A | " | A | A | | | | | " | A | | | | | | | |
| | " | " | 56 | | B | B | A | " | B | B | | | | | " | A | | | | | | | |
| | " | " | 57 | H | B | B | B | " | B | B | H | L | L | H | " | B | H | L | L | | | | |
| | " | " | 58 | | B | B | B | " | B | B | | | | | " | B | | | | | | | |
| | " | " | 59 | | A | A | B | " | A | A | | | | | " | B | | | | | | | |
| | " | " | 60 | | A | A | A | " | A | A | | | | | " | A | | | | | | | |
| | " | " | 61 | L | A | A | B | " | A | A | L | H | H | L | " | B | L | H | H | | | | |
| | " | " | 62 | | A | A | B | " | A | A | | | | | " | B | | | | | | | |
| | " | " | 63 | | B | B | B | " | B | B | | | | | " | B | | | | | | | |
| | " | " | 64 | | B | B | A | " | B | B | | | | | " | A | | | | | | | |
| | " | " | 65 | H | B | B | A | " | B | B | H | L | L | H | " | A | H | L | L | | | | |
| 8 1/ 3/ | Same tests, terminal conditions and limits as for subgroup 1, except $T_C$ = 125°C and $T_C$ = -55°C. | | | | | | | | | | | | | | | | | | | | | | |

See footnotes at end of device type 01.

TABLE III. Group A inspection for device type 01.
Terminal conditions (pins not designated may be H ≥ 2.0 V or L ≤ 0.8 V or open).

| Subgroup | Symbol | MIL-STD-883 method | Cases E, F | 1 | 2 | 3 | 4 | 5 | 6 | 7 | 8 | 9 | 10 | 11 | 12 | 13 | 14 | 15 | 16 | Meas. terminal | Test limits | | |
|---|---|---|---|---|---|---|---|---|---|---|---|---|---|---|---|---|---|---|---|---|---|---|---|
| | | | Test No. | 1 $\overline{Q}$ | 1D | 2D | CLOCK 3-4 | $V_{CC}$ | 3D | 4D | 4 $\overline{Q}$ | 4Q | 3Q | 3 $\overline{Q}$ | GND | CLOCK 1-2 | 2 $\overline{Q}$ | 2Q | 1Q | | Min | Max | Unit |
| 9 | $t_{PLH1}$ | 3003 | 66 | | IN-W | | | 5.0 V | | | | | | | GND | A | | | OUT | 1D-1Q | 2 | 34 | ns |
| $T_C$ = 25°C | " | (Fig 4) | 67 | | | IN-W | | " | | | | | | | " | A | | OUT | | 2D-2Q | " | " | " |
| " | " | " | 68 | | | | A | " | IN-W | | | | OUT | | " | | | | | 3D-3Q | " | " | " |
| " | " | " | 69 | | | | A | " | | IN-W | | OUT | | | " | | | | | 4D-4Q | " | " | " |
| | $t_{PLH2}$ | " | 70 | OUT | IN-X | | | " | | | | | | | " | A | | | | 1D-1 $\overline{Q}$ | " | 44 | " |
| " | " | " | 71 | | | IN-X | | " | | | | | | | " | A | OUT | | | 2D-2 $\overline{Q}$ | " | " | " |
| " | " | " | 72 | | | | A | " | IN-X | | | | | OUT | " | | | | | 3D-3 $\overline{Q}$ | " | " | " |
| " | " | " | 73 | | | | A | " | | IN-X | OUT | | | | " | | | | | 4D-4 $\overline{Q}$ | " | " | " |
| | $t_{PLH3}$ | 3003 | 74 | | IN | | | " | | | | | | | " | IN | | | OUT | CLK 1-2-1Q | " | 34 | " |
| " | (Fig 5) | | 75 | | | IN | | " | | | | | | | " | IN | | OUT | | CLK 1-2-2Q | " | " | " |
| " | " | " | 76 | | | | IN | " | IN | | | | OUT | | " | | | | | CLK 3-4-3Q | " | " | " |
| " | " | " | 77 | | | | IN | " | | IN | | OUT | | | " | | | | | CLK 3-4-4Q | " | " | " |
| | $t_{PLH4}$ | " | 78 | OUT | IN | | | " | | | | | | | " | IN | | | | CLK 1-2-1 $\overline{Q}$ | " | " | " |
| " | " | " | 79 | | | IN | | " | | | | | | | " | IN | OUT | | | CLK 1-2-2 $\overline{Q}$ | " | " | " |
| " | " | " | 80 | | | | IN | " | IN | | | | | OUT | " | | | | | CLK 3-4-3 $\overline{Q}$ | " | " | " |
| " | " | " | 81 | | | | IN | " | | IN | OUT | | | | " | | | | | CLK 3-4-4 $\overline{Q}$ | " | " | " |
| | $t_{PHL1}$ | 3003 | 82 | | IN-X | | | " | | | | | | | " | A | | | OUT | 1D-1Q | " | 29 | " |
| " | (Fig 4) | | 83 | | | IN-X | | " | | | | | | | " | A | | OUT | | 2D-2Q | " | " | " |
| " | " | " | 84 | | | | A | " | IN-X | | | | OUT | | " | | | | | 3D-3Q | " | " | " |
| " | " | " | 85 | | | | A | " | | IN-X | | OUT | | | " | | | | | 4D-4Q | " | " | " |
| | $t_{PHL2}$ | " | 86 | OUT | IN-W | | | " | | | | | | | " | A | | | | 1D-1 $\overline{Q}$ | " | 19 | " |
| " | " | " | 87 | | | IN-W | | " | | | | | | | " | A | OUT | | | 2D-2 $\overline{Q}$ | " | " | " |
| " | " | " | 88 | | | | A | " | IN-W | | | | | OUT | " | | | | | 3D-3 $\overline{Q}$ | " | " | " |
| " | " | " | 89 | | | | A | " | | IN-W | OUT | | | | " | | | | | 4D-4 $\overline{Q}$ | " | " | " |
| | $t_{PHL3}$ | 3003 | 90 | | IN | | | " | | | | | | | " | IN | | | OUT | CLK 1-2-1Q | " | " | " |
| " | (Fig 5) | | 91 | | | IN | | " | | | | | | | " | IN | | OUT | | CLK 1-2-2Q | " | " | " |
| " | " | " | 92 | | | | IN | " | IN | | | | OUT | | " | | | | | CLK 3-4-3Q | " | " | " |
| " | " | " | 93 | | | | IN | " | | IN | | OUT | | | " | | | | | CLK 3-4-4Q | " | " | " |
| | $t_{PHL4}$ | " | 94 | OUT | IN | | | " | | | | | | | " | IN | | | | CLK 1-2-1 $\overline{Q}$ | " | " | " |
| " | " | " | 95 | | | IN | | " | | | | | | | " | IN | OUT | | | CLK 1-2-2 $\overline{Q}$ | " | " | " |
| " | " | " | 96 | | | | IN | " | IN | | | | | OUT | " | | | | | CLK 3-4-3 $\overline{Q}$ | " | " | " |
| " | " | " | 97 | | | | IN | " | | IN | OUT | | | | " | | | | | CLK 3-4-4 $\overline{Q}$ | " | " | " |

See footnotes at end of device type 01.

TABLE III. Group A inspection for device type 01.
Terminal conditions (pins not designated may be H ≥ 2.0 V or L ≤ 0.8 V or open).

| Subgroup | Symbol | MIL-STD-883 method | Cases E, F | 1 | 2 | 3 | 4 | 5 | 6 | 7 | 8 | 9 | 10 | 11 | 12 | 13 | 14 | 15 | 16 | Meas. terminal | Test limits | | |
|---|---|---|---|---|---|---|---|---|---|---|---|---|---|---|---|---|---|---|---|---|---|---|---|
| | | | Test No. | 1 $\overline{Q}$ | 1D | 2D | CLOCK 3-4 | $V_{CC}$ | 3D | 4D | 4 $\overline{Q}$ | 4Q | 3Q | 3 $\overline{Q}$ | GND | CLOCK 1-2 | 2 $\overline{Q}$ | 2Q | 1Q | | Min | Max | Unit |
| 10 | $t_{PLH1}$ | 3003 | 98 | | IN-W | | | 5.0 V | | | | | | | GND | A | | | OUT | 1D-1Q | 2 | 44 | ns |
| $T_C$ = 125°C | " | (Fig 4) | 99 | | | IN-W | | " | | | | | | | " | A | | OUT | | 2D-2Q | " | " | " |
| " | " | " | 100 | | | | A | " | IN-W | | | | OUT | | " | | | | | 3D-3Q | " | " | " |
| " | " | " | 101 | | | | A | " | | IN-W | | OUT | | | " | | | | | 4D-4Q | " | " | " |
| | $t_{PLH2}$ | " | 102 | OUT | IN-X | | | " | | | | | | | " | A | | | | 1D-1 $\overline{Q}$ | " | 55 | " |
| " | " | " | 103 | | | IN-X | | " | | | | | | | " | A | OUT | | | 2D-2 $\overline{Q}$ | " | " | " |
| " | " | " | 104 | | | | A | " | IN-X | | | | | OUT | " | | | | | 3D-3 $\overline{Q}$ | " | " | " |
| " | " | " | 105 | | | | A | " | | IN-X | OUT | | | | " | | | | | 4D-4 $\overline{Q}$ | " | " | " |
| | $t_{PLH3}$ | 3003 | 106 | | IN | | | " | | | | | | | " | IN | | | OUT | CLK 1-2-1Q | " | 44 | " |
| " | (Fig 5) | " | 107 | | | IN | | " | | | | | | | " | IN | | OUT | | CLK 1-2-2Q | " | " | " |
| " | " | " | 108 | | | | IN | " | IN | | | | OUT | | " | | | | | CLK 3-4-3Q | " | " | " |
| " | " | " | 109 | | | | IN | " | | IN | | OUT | | | " | | | | | CLK 3-4-4Q | " | " | " |
| | $t_{PLH4}$ | " | 110 | OUT | IN | | | " | | | | | | | " | IN | | | | CLK 1-2-1 $\overline{Q}$ | " | " | " |
| " | " | " | 111 | | | IN | | " | | | | | | | " | IN | OUT | | | CLK 1-2-2 $\overline{Q}$ | " | " | " |
| " | " | " | 112 | | | | IN | " | IN | | | | | OUT | " | | | | | CLK 3-4-3 $\overline{Q}$ | " | " | " |
| " | " | " | 113 | | | | IN | " | | IN | OUT | | | | " | | | | | CLK 3-4-4 $\overline{Q}$ | " | " | " |
| | $t_{PHL1}$ | 3003 | 114 | | IN-X | | | " | | | | | | | " | A | | | OUT | 1D-1Q | " | 38 | " |
| " | (Fig 4) | " | 115 | | | IN-X | | " | | | | | | | " | A | | OUT | | 2D-2Q | " | " | " |
| " | " | " | 116 | | | | A | " | IN-X | | | | OUT | | " | | | | | 3D-3Q | " | " | " |
| " | " | " | 117 | | | | A | " | | IN-X | | OUT | | | " | | | | | 4D-4Q | " | " | " |
| | $t_{PHL2}$ | " | 118 | OUT | IN-W | | | " | | | | | | | " | A | | | | 1D-1 $\overline{Q}$ | " | 25 | " |
| " | " | " | 119 | | | IN-W | | " | | | | | | | " | A | OUT | | | 2D-2 $\overline{Q}$ | " | " | " |
| " | " | " | 120 | | | | A | " | IN-W | | | | | OUT | " | | | | | 3D-3 $\overline{Q}$ | " | " | " |
| " | " | " | 121 | | | | A | " | | IN-W | OUT | | | | " | | | | | 4D-4 $\overline{Q}$ | " | " | " |
| | $t_{PHL3}$ | 3003 | 122 | | IN | | | " | | | | | | | " | IN | | | OUT | CLK 1-2-1Q | " | " | " |
| " | (Fig 5) | " | 123 | | | IN | | " | | | | | | | " | IN | | OUT | | CLK 1-2-2Q | " | " | " |
| " | " | " | 124 | | | | IN | " | IN | | | | OUT | | " | | | | | CLK 3-4-3Q | " | " | " |
| " | " | " | 125 | | | | IN | " | | IN | | OUT | | | " | | | | | CLK 3-4-4Q | " | " | " |
| | $t_{PHL4}$ | " | 126 | OUT | IN | | | " | | | | | | | " | IN | | | | CLK 1-2-1 $\overline{Q}$ | " | " | " |
| " | " | " | 127 | | | IN | | " | | | | | | | " | IN | OUT | | | CLK 1-2-2 $\overline{Q}$ | " | " | " |
| " | " | " | 128 | | | | IN | " | IN | | | | | OUT | " | | | | | CLK 3-4-3 $\overline{Q}$ | " | " | " |
| " | " | " | 129 | | | | IN | " | | IN | OUT | | | | " | | | | | CLK 3-4-4 $\overline{Q}$ | " | " | " |

See footnotes on next page.

TABLE III. Group A inspection for device type 01.

Terminal conditions (pins not designated may be H $\geq$ 2.0 V or L $\leq$ 0.8 V or open).

NOTES:

A = Clock pulse A, see figure 4.

W and X = Various D-input pulses, see figure 4.

1/ Only a summary of attributes data is required.

2/ Only voltages shall be either:

(a) H = 2.4 volts minimum and L = 0.4 volt maximum when using a high speed checker double comparator, or

(b) H $\geq$ 1.5 volts and L $\leq$ 1.5 volts when using a high speed checker single comparator.

TABLE III. Group A inspection for device type 02.

Terminal conditions (pins not designated may be H ≥ 2.0 V or L ≤ 0.8 V or open).

| Subgroup | Symbol | MIL-STD-883 method | Case A,B,C,D | 1 | 2 | 3 | 4 | 5 | 6 | 7 | 8 | 9 | 10 | 11 | 12 | 13 | 14 | Meas. terminal | Test limits | | |
|---|---|---|---|---|---|---|---|---|---|---|---|---|---|---|---|---|---|---|---|---|---|
| | | | Test No. | 1D | 2D | CLOCK 3-4 | $V_{CC}$ | 3D | 4D | NC | 4Q | 3Q | NC | GND | CLOCK 1-2 | 2Q | 1Q | | Min | Max | Unit |
| 1 | $V_{OH}$ | 3006 | 1 | 2.0 V | | | 4.5 V | | | | | | | GND | 2.0 V | | -0.4 mA | 1Q | 2.4 | | V |
| $T_C$ =25°C | " | " | 2 | | 2.0 V | | " | | | | | | | " | 2.0 V | -0.4 mA | | 2Q | " | | " |
| | " | " | 3 | | | 2.0 V | " | 2.0 V | | | | -0.4 mA | | " | | | | 3Q | " | | " |
| | " | " | 4 | | | 2.0 V | " | | 2.0 V | | -0.4 mA | | | " | | | | 4Q | " | | " |
| | $V_{OL}$ | 3007 | 5 | 0.8 V | | | " | | | | | | | " | 2.0 V | | 16 mA | 1Q | | 0.4 | " |
| | " | " | 6 | | 0.8 V | | " | | | | | | | " | 2.0 V | 16 mA | | 2Q | | " | " |
| | " | " | 7 | | | 2.0 V | " | 0.8 V | | | | 16 mA | | " | | | | 3Q | | " | " |
| | " | " | 8 | | | 2.0 V | " | | 0.8 V | | 16 mA | | | " | | | | 4Q | | " | " |
| | $I_{IL1}$ | 3009 | 9 | 0.4 V | | | 5.5 V | | | | | | | " | 4.5 V | | | 1D | -1.4 | -3.2 | mA |
| | " | " | 10 | | 0.4 V | | " | | | | | | | " | 4.5 V | | | 2D | " | " | " |
| | " | " | 11 | | | 4.5 V | " | 0.4 V | | | | | | " | | | | 3D | " | " | " |
| | " | " | 12 | | | 4.5 V | " | | 0.4 V | | | | | " | | | | 4D | " | " | " |
| | $I_{IL2}$ | " | 13 | 0.8 V | 0.8 V | | " | | | | | | | " | 0.4 V | | | CLK 1-2 | -2.8 | -6.4 | " |
| | $I_{IL2}$ | " | 14 | | | 0.4 V | " | 0.8 V | 0.8 V | | | | | " | | | | CLK 3-4 | -2.8 | -6.4 | " |
| | $I_{IH1}$ | 3010 | 15 | 2.4 V | | | " | | | | | | | " | GND | | | 1D | | 80 | µA |
| | " | " | 16 | | 2.4 V | | " | | | | | | | " | GND | | | 2D | | " | " |
| | " | " | 17 | | | GND | " | 2.4 V | | | | | | " | | | | 3D | | " | " |
| | " | " | 18 | | | GND | " | | 2.4 V | | | | | " | | | | 4D | | " | " |
| | $I_{IH2}$ | " | 19 | 5.5 V | | | " | | | | | | | " | GND | | | 1D | | 200 | " |
| | " | " | 20 | | 5.5 V | | " | | | | | | | " | GND | | | 2D | | " | " |
| | " | " | 21 | | | GND | " | 5.5 V | | | | | | " | | | | 3D | | " | " |
| | " | " | 22 | | | GND | " | | 5.5 V | | | | | " | | | | 4D | | " | " |
| | $I_{IH3}$ | " | 23 | GND | GND | | " | | | | | | | " | 2.4 V | | | CLK 1-2 | | 160 | " |
| | $I_{IH3}$ | " | 24 | | | 2.4 V | " | GND | GND | | | | | " | | | | CLK 3-4 | | 160 | " |
| | $I_{IH4}$ | " | 25 | GND | GND | | " | | | | | | | " | 5.5 V | | | CLK 1-2 | | 400 | " |
| | $I_{IH4}$ | " | 26 | | | 5.5 V | " | GND | GND | | | | | " | | | | CLK 3-4 | | 400 | " |
| | $I_{OS}$ | 3011 | 27 | 4.5 V | | | " | | | | | | | " | 4.5 V | | GND | 1Q | -20 | -57 | mA |
| | " | " | 28 | | 4.5 V | | " | | | | | | | " | 4.5 V | GND | | 2Q | " | " | " |
| | " | " | 29 | | | 4.5 V | " | 4.5 V | | | | GND | | " | | | | 3Q | " | " | " |
| | " | " | 30 | | | 4.5 V | " | | 4.5 V | | GND | | | " | | | | 4Q | " | " | " |
| | $I_{CC}$ | 3005 | 31 | GND | GND | GND | " | GND | GND | | | | | " | GND | | | $V_{CC}$ | | 46 | " |
| | $V_{IC}$ | | 32 | -12 mA | | | 4.5 V | | | | | | | " | | | | 1D | | -1.5 | V |
| | " | | 33 | | -12 mA | | " | | | | | | | " | | | | 2D | | " | " |
| | " | | 34 | | | | " | -12 mA | | | | | | " | | | | 3D | | " | " |
| | " | | 35 | | | | " | | -12 mA | | | | | " | | | | 4D | | " | " |
| | " | | 36 | | | | " | | | | | | | " | -12 mA | | | CLK 1-2 | | " | " |
| | " | | 37 | | | -12 mA | " | | | | | | | " | | | | CLK 3-4 | | " | " |
| 2 | Same tests, terminal conditions and limits as for subgroup 1, except $T_C$ = 125°C and $V_{IC}$ tests are omitted. | | | | | | | | | | | | | | | | | | | | |
| 3 | Same tests, terminal conditions and limits as for subgroup 1, except $T_C$ = -55°C and $V_{IC}$ tests are omitted. | | | | | | | | | | | | | | | | | | | | |

See footnotes at end of device type 02.

TABLE III. Group A inspection for device type 02.
Terminal conditions (pins not designated may be H ≥ 2.0 V or L ≤ 0.8 V or open).

| Subgroup | Symbol | MIL-STD-883 method | Case A,B,C,D | 1 | 2 | 3 | 4 | 5 | 6 | 7 | 8 | 9 | 10 | 11 | 12 | 13 | 14 | Meas. terminal | Test limits | | |
|---|---|---|---|---|---|---|---|---|---|---|---|---|---|---|---|---|---|---|---|---|---|
| | | | Test No. | 1D | 2D | CLOCK 3-4 | $V_{CC}$ | 3D | 4D | NC | 4Q | 3Q | NC | GND | CLOCK 1-2 | 2Q | 1Q | | Min | Max | Unit |
| 7 1/ | VLT-H1 | see fig 4 | 38 | IN-W | | | 5.0 V | | | | | | | GND | A | | OUT | 1D-1Q | 2.4 | | V |
| $T_C$ =25°C | " | | 39 | | IN-W | | " | | | | | | | " | A | OUT | | 2D-2Q | " | | " |
| | " | | 40 | | | A | " | IN-W | | | | OUT | | " | | | | 3D-3Q | " | | " |
| | " | | 41 | | | A | " | | IN-W | | OUT | | | " | | | | 4D-4Q | " | | " |
| | VLT-L1 | | 42 | IN-X | | | " | | | | | | | " | A | | OUT | 1D-1Q | | 0.4 | " |
| | " | | 43 | | IN-X | | " | | | | | | | " | A | OUT | | 2D-2Q | | " | " |
| | " | | 44 | | | A | " | IN-X | | | | OUT | | " | | | | 3D-3Q | | " | " |
| | " | | 45 | | | A | " | | IN-X | | OUT | | | " | | | | 4D-4Q | | " | " |
| | VLT-H3 | see fig 5 | 46 | IN | | | " | | | | | | | " | IN-B | | OUT | CLK 1-2-1Q | 2.4 | | " |
| | " | | 47 | | IN | | " | | | | | | | " | IN-B | OUT | | CLK 1-2-2Q | " | | " |
| | " | | 48 | | | IN | " | IN | | | | OUT | | " | | | | CLK 3-4-3Q | " | | " |
| | " | | 49 | | | IN | " | | IN | | OUT | | | " | | | | CLK 3-4-4Q | " | | " |
| | VLT-L3 | | 50 | IN | | | " | | | | | | | " | IN-B | | OUT | CLK 1-2-1Q | | 0.4 | " |
| | " | | 51 | | IN | | " | | | | | | | " | IN-B | OUT | | CLK 1-2-2Q | | " | " |
| | " | | 52 | | | IN | " | IN | | | | OUT | | " | | | | CLK 3-4-3Q | | " | " |
| | " | | 53 | | | IN | " | | IN | | OUT | | | " | | | | CLK 3-4-4Q | | " | " |
| 8 1/ | Same tests, terminal conditions and limits as for subgroup 7, except $T_C$ = 125°C and -55°C. | | | | | | | | | | | | | | | | | | | | |
| 9 | $t_{PLH1}$ | 3003 | 54 | IN-W | | | 5.0 V | | | | | | | GND | A | | OUT | 1D-1Q | 2 | 34 | ns |
| $T_C$ =25°C | " | Fig 4-A | 55 | | IN-W | | " | | | | | | | " | A | OUT | | 2D-2Q | " | " | " |
| | " | " | 56 | | | A | " | IN-W | | | | OUT | | " | | | | 3D-3Q | " | " | " |
| | " | " | 57 | | | A | " | | IN-W | | OUT | | | " | | | | 4D-4Q | " | " | " |
| | $t_{PHL1}$ | 3003 | 58 | IN-X | | | " | | | | | | | " | A | | OUT | 1D-1Q | " | 29 | " |
| | " | Fig 4-B | 59 | | IN-X | | " | | | | | | | " | A | OUT | | 2D-2Q | " | " | " |
| | " | " | 60 | | | A | " | IN-X | | | | OUT | | " | | | | 3D-3Q | " | " | " |
| | " | " | 61 | | | A | " | | IN-X | | OUT | | | " | | | | 4D-4Q | " | " | " |
| | $t_{PLH3}$ | 3003 | 62 | IN | | | " | | | | | | | " | IN | | OUT | CLK 1-2-1Q | " | 34 | " |
| | " | Fig 5 | 63 | | IN | | " | | | | | | | " | IN | OUT | | CLK 1-2-2Q | " | " | " |
| | " | " | 64 | | | IN | " | IN | | | | OUT | | " | | | | CLK 3-4-3Q | " | " | " |
| | " | " | 65 | | | IN | " | | IN | | OUT | | | " | | | | CLK 3-4-4Q | " | " | " |
| | $t_{PHL3}$ | " | 66 | IN | | | " | | | | | | | " | IN | | OUT | CLK 1-2-1Q | " | 19 | " |
| | " | " | 67 | | IN | | " | | | | | | | " | IN | OUT | | CLK 1-2-2Q | " | " | " |
| | " | " | 68 | | | IN | " | IN | | | | OUT | | " | | | | CLK 3-4-3Q | " | " | " |
| | " | " | 69 | | | IN | " | | IN | | OUT | | | " | | | | CLK 3-4-4Q | " | " | " |

See footnotes at end of device type 02.

TABLE III. Group A inspection for device type 02.
Terminal conditions (pins not designated may be H ≥ 2.0 V or L ≤ 0.8 V or open).

| Subgroup | Symbol | MIL-STD-883 method | Case A,B,C,D | 1 | 2 | 3 | 4 | 5 | 6 | 7 | 8 | 9 | 10 | 11 | 12 | 13 | 14 | Meas. terminal | Test limits | | |
|---|---|---|---|---|---|---|---|---|---|---|---|---|---|---|---|---|---|---|---|---|---|
| | | | Test No. | 1D | 2D | CLOCK 3-4 | $V_{CC}$ | 3D | 4D | NC | 4Q | 3Q | NC | GND | CLOCK 1-2 | 2Q | 1Q | | Min | Max | Unit |
| 10 | $t_{PLH1}$ | 3003 | 70 | IN-W | | | 5.0 V | | | | | | | GND | A | | OUT | 1D-1Q | 2 | 44 | ns |
| $T_C$ = 125°C | " | Fig 4-A | 71 | | IN-W | | " | | | | | | | " | A | OUT | | 2D-2Q | " | " | " |
| | " | " | 72 | | | A | " | IN-W | | | | OUT | | " | | | | 3D-3Q | " | " | " |
| | " | " | 73 | | | A | " | | IN-W | | OUT | | | " | | | | 4D-4Q | " | " | " |
| | $t_{PHL1}$ | 3003 | 74 | IN-X | | | " | | | | | | | " | A | | OUT | 1D-1Q | " | 38 | " |
| | " | Fig 4-B | 75 | | IN-X | | " | | | | | | | " | A | OUT | | 2D-2Q | " | " | " |
| | " | " | 76 | | | A | " | IN-X | | | | OUT | | " | | | | 3D-3Q | " | " | " |
| | " | " | 77 | | | A | " | | IN-X | | OUT | | | " | | | | 4D-4Q | " | " | " |
| | $t_{PLH3}$ | 3003 | 78 | IN | | | " | | | | | | | " | IN | | OUT | CLK 1-2-1Q | " | 44 | " |
| | " | Fig 5 | 79 | | IN | | " | | | | | | | " | IN | OUT | | CLK 1-2-2Q | " | " | " |
| | " | " | 80 | | | IN | " | IN | | | | OUT | | " | | | | CLK 3-4-3Q | " | " | " |
| | " | " | 81 | | | IN | " | | IN | | OUT | | | " | | | | CLK 3-4-4Q | " | " | " |
| | $t_{PHL3}$ | " | 82 | IN | | | " | | | | | | | " | IN | | OUT | CLK 1-2-1Q | " | 25 | " |
| | " | " | 83 | | IN | | " | | | | | | | " | IN | OUT | | CLK 1-2-2Q | " | " | " |
| | " | " | 84 | | | IN | " | IN | | | | OUT | | " | | | | CLK 3-4-3Q | " | " | " |
| | " | " | 85 | | | IN | " | | IN | | OUT | | | " | | | | CLK 3-4-4Q | " | " | " |
| 11 | Same tests, terminal conditions and limits as for subgroup 10, except $T_C$ = -55°C. | | | | | | | | | | | | | | | | | | | | |

NOTES:
A = Clock pulse A, see figure 4.
W and X = Various D-input pulses, see figure 4.

1/ Latch voltage, $V_{LT}$, shall be measured no sooner than 10 μs after switching transition occurs.

TABLE III. Group A inspection for device type 03.
Terminal conditions (pins not designated may be H ≥ 2.0 V, or L ≤ 0.8 V, or open).

| Subgroup | Symbol | MIL-STD-883 method | Case J, K, L, Z | 1 | 2 | 3 | 4 | 5 | 6 | 7 | 8 | 9 | 10 | 11 | 12 | Meas. terminal | Test limits | | |
|---|---|---|---|---|---|---|---|---|---|---|---|---|---|---|---|---|---|---|---|
| | | | Test No. | 1 $\overline{MR}$ | 1 $\overline{E}$ 0 | 1 $\overline{E}$ 1 | 1D0 | 1Q0 | 1D1 | 1Q1 | 1D2 | 1Q2 | 1D3 | 1Q3 | GND | | Min | Max | Unit |
| 1 | $V_{OH}$ | 3006 | 1 | 4.5 V | 0.8 V | 0.8 V | 4.5 V | -0.8 mA | 4.5 V | | 4.5 V | | 4.5 V | | GND | 1Q0 | 2.4 | | V |
| $T_C$ = 25°C | " | " | 2 | " | " | " | " | | " | -0.8 mA | " | | " | | " | 1Q1 | " | | " |
| " | " | " | 3 | " | " | " | " | | " | | " | -0.8 mA | " | | " | 1Q2 | " | | " |
| " | " | " | 4 | " | " | " | " | | " | | " | | " | -0.8 mA | " | 1Q3 | " | | " |
| " | " | " | 5 | " | " | " | " | | " | | " | | " | | " | 2Q0 | " | | " |
| " | " | " | 6 | " | " | " | " | | " | | " | | " | | " | 2Q1 | " | | " |
| " | " | " | 7 | " | " | " | " | | " | | " | | " | | " | 2Q2 | " | | " |
| " | " | " | 8 | " | " | " | " | | " | | " | | " | | " | 2Q3 | " | | " |
| " | $V_{OL}$ | 3007 | 9 | " | " | " | 0.8 V | 16 mA | 0.8 V | | 0.8 V | | 0.8 V | | " | 1Q0 | | 0.4 | " |
| " | " | " | 10 | " | " | " | " | | " | 16 mA | " | | " | | " | 1Q1 | | " | " |
| " | " | " | 11 | " | " | " | " | | " | | " | 16 mA | " | | " | 1Q2 | | " | " |
| " | " | " | 12 | " | " | " | " | | " | | " | | " | 16 mA | " | 1Q3 | | " | " |
| " | " | " | 13 | " | " | " | " | | " | | " | | " | | " | 2Q0 | | " | " |
| " | " | " | 14 | " | " | " | " | | " | | " | | " | | " | 2Q1 | | " | " |
| " | " | " | 15 | " | " | " | " | | " | | " | | " | | " | 2Q2 | | " | " |
| " | " | " | 16 | " | " | " | " | | " | | " | | " | | " | 2Q3 | | " | " |
| " | $V_{IC}$ | | 17 | -12 mA | | | | | | | | | | | " | 1 $\overline{MR}$ | | -1.5 | " |
| " | " | | 18 | | -12 mA | | | | | | | | | | " | 1 $\overline{E}$ 0 | | " | " |
| " | " | | 19 | | | -12 mA | | | | | | | | | " | 1 $\overline{E}$ 1 | | " | " |
| " | " | | 20 | | | | -12 mA | | | | | | | | " | 1D0 | | " | " |
| " | " | | 21 | | | | | | -12 mA | | | | | | " | 1D1 | | " | " |
| " | " | | 22 | | | | | | | | -12 mA | | | | " | 1D2 | | " | " |
| " | " | | 23 | | | | | | | | | | -12 mA | | " | 1D3 | | " | " |
| " | " | | 24 | | | | | | | | | | | | " | 2 $\overline{MR}$ | | " | " |
| " | " | | 25 | | | | | | | | | | | | " | 2 $\overline{E}$ 0 | | " | " |
| " | " | | 26 | | | | | | | | | | | | " | 2 $\overline{E}$ 1 | | " | " |
| " | " | | 27 | | | | | | | | | | | | " | 2D0 | | " | " |
| " | " | | 28 | | | | | | | | | | | | " | 2D1 | | " | " |
| " | " | | 29 | | | | | | | | | | | | " | 2D2 | | " | " |
| " | " | | 30 | | | | | | | | | | | | " | 2D3 | | " | " |
| " | $I_{IL1}$ | 3009 | 31 CKT A | GND | GND | | 0.4 V | | | | | | | | " | 1D0 | -0.7 | -2.4 | mA |
| " | " | " | 31 CKT B | " | " | | " | | | | | | | | " | 1D0 | -0.7 | -1.6 | " |
| " | " | " | 31 CKT C | " | " | | " | | | | | | | | " | 1D0 | -0.5 | -1.4 | " |
| " | " | " | 32 CKT A | " | " | | | | 0.4 V | | | | | | " | 1D1 | -0.7 | -2.4 | " |
| " | " | " | 32 CKT B | " | " | | | | " | | | | | | " | 1D1 | -0.7 | -1.6 | " |
| " | " | " | 32 CKT C | " | " | | | | " | | | | | | " | 1D1 | -0.5 | -1.4 | " |
| " | " | " | 33 CKT A | " | " | | | | | | 0.4 V | | | | " | 1D2 | -0.7 | -2.4 | " |
| " | " | " | 33 CKT B | " | " | | | | | | " | | | | " | 1D2 | -0.7 | -1.6 | " |
| " | " | " | 33 CKT C | " | " | | | | | | " | | | | " | 1D2 | -0.5 | -1.4 | " |
| " | " | " | 34 CKT A | " | " | | | | | | | | 0.4 V | | " | 1D3 | -0.7 | -2.4 | " |
| " | " | " | 34 CKT B | " | " | | | | | | | | " | | " | 1D3 | -0.7 | -1.6 | " |
| " | " | " | 34 CKT C | " | " | | | | | | | | " | | " | 1D3 | -0.5 | -1.4 | " |
| " | " | " | 35 CKT A | | | | | | | | | | | | " | 2D0 | -0.7 | -2.4 | " |
| " | " | " | 35 CKT B | | | | | | | | | | | | " | 2D0 | -0.7 | -1.6 | " |
| " | " | " | 35 CKT C | | | | | | | | | | | | " | 2D0 | -0.5 | -1.4 | " |
| " | " | " | 36 CKT A | | | | | | | | | | | | " | 2D1 | -0.7 | -2.4 | " |
| " | " | " | 36 CKT B | | | | | | | | | | | | " | 2D1 | -0.7 | -1.6 | " |
| " | " | " | 36 CKT C | | | | | | | | | | | | " | 2D1 | -0.5 | -1.4 | " |

TABLE III. Group A inspection for device type 03.
Terminal conditions (pins not designated may be H ≥ 2.0 V, or L ≤ 0.8 V, or open).

| Subgroup | Symbol | MIL-STD-883 method | Case J, K, L, Z | 13 | 14 | 15 | 16 | 17 | 18 | 19 | 20 | 21 | 22 | 23 | 24 | Meas. terminal | Test limits | | |
|---|---|---|---|---|---|---|---|---|---|---|---|---|---|---|---|---|---|---|---|
| | | | Test No. | 2 $\overline{MR}$ | 2 $\overline{E}$ 0 | 2 $\overline{E}$ 1 | 2D0 | 2Q0 | 2D1 | 2Q1 | 2D2 | 2Q2 | 2D3 | 2Q3 | $V_{CC}$ | | Min | Max | Unit |
| 1 | $V_{OH}$ | 3006 | 1 | 4.5 V | 0.8 V | 0.8 V | 4.5 V | | 4.5 V | | 4.5 V | | 4.5 V | | GND | 1Q0 | 2.4 | | V |
| $T_C$ = 25°C | " | " | 2 | " | " | " | " | | " | | " | | " | | " | 1Q1 | " | | " |
| " | " | " | 3 | " | " | " | " | | " | | " | | " | | " | 1Q2 | " | | " |
| " | " | " | 4 | " | " | " | " | | " | | " | | " | | " | 1Q3 | " | | " |
| " | " | " | 5 | " | " | " | " | -0.8 mA | " | | " | | " | | " | 2Q0 | " | | " |
| " | " | " | 6 | " | " | " | " | | " | -0.8 mA | " | | " | | " | 2Q1 | " | | " |
| " | " | " | 7 | " | " | " | " | | " | | " | -0.8 mA | " | | " | 2Q2 | " | | " |
| " | " | " | 8 | " | " | " | " | | " | | " | | " | -0.8 mA | " | 2Q3 | " | | " |
| " | $V_{OL}$ | 3007 | 9 | " | " | " | 0.8 V | | 0.8 V | | 0.8 V | | 0.8 V | | " | 1Q0 | | 0.4 | " |
| " | " | " | 10 | " | " | " | " | | " | | " | | " | | " | 1Q1 | | " | " |
| " | " | " | 11 | " | " | " | " | | " | | " | | " | | " | 1Q2 | | " | " |
| " | " | " | 12 | " | " | " | " | | " | | " | | " | | " | 1Q3 | | " | " |
| " | " | " | 13 | " | " | " | " | 16 mA | " | | " | | " | | " | 2Q0 | | " | " |
| " | " | " | 14 | " | " | " | " | | " | 16 mA | " | | " | | " | 2Q1 | | " | " |
| " | " | " | 15 | " | " | " | " | | " | | " | 16 mA | " | | " | 2Q2 | | " | " |
| " | " | " | 16 | " | " | " | " | | " | | " | | " | 16 mA | " | 2Q3 | | " | " |
| " | $V_{IC}$ | | 17 | | | | | | | | | | | | " | 1 $\overline{MR}$ | | -1.5 | " |
| " | " | | 18 | | | | | | | | | | | | " | 1 $\overline{E}$ 0 | | " | " |
| " | " | | 19 | | | | | | | | | | | | " | 1 $\overline{E}$ 1 | | " | " |
| " | " | | 20 | | | | | | | | | | | | " | 1D0 | | " | " |
| " | " | | 21 | | | | | | | | | | | | " | 1D1 | | " | " |
| " | " | | 22 | | | | | | | | | | | | " | 1D2 | | " | " |
| " | " | | 23 | | | | | | | | | | | | " | 1D3 | | " | " |
| " | " | | 24 | -12 mA | | | | | | | | | | | " | 2 $\overline{MR}$ | | " | " |
| " | " | | 25 | | -12 mA | | | | | | | | | | " | 2 $\overline{E}$ 0 | | " | " |
| " | " | | 26 | | | -12 mA | | | | | | | | | " | 2 $\overline{E}$ 1 | | " | " |
| " | " | | 27 | | | | -12 mA | | | | | | | | " | 2D0 | | " | " |
| " | " | | 28 | | | | | | -12 mA | | | | | | " | 2D1 | | " | " |
| " | " | | 29 | | | | | | | | -12 mA | | | | " | 2D2 | | " | " |
| " | " | | 30 | | | | | | | | | | -12 mA | | " | 2D3 | | " | " |
| " | $I_{IL1}$ | 3009 | 31 CKT A | | | | | | | | | | | | " | 1D0 | -0.7 | -2.4 | mA |
| " | " | " | 31 CKT B | | | | | | | | | | | | " | 1D0 | -0.7 | -1.6 | " |
| " | " | " | 31 CKT C | | | | | | | | | | | | " | 1D0 | -0.5 | -1.4 | " |
| " | " | " | 32 CKT A | | | | | | | | | | | | " | 1D1 | -0.7 | -2.4 | " |
| " | " | " | 32 CKT B | | | | | | | | | | | | " | 1D1 | -0.7 | -1.6 | " |
| " | " | " | 32 CKT C | | | | | | | | | | | | " | 1D1 | -0.5 | -1.4 | " |
| " | " | " | 33 CKT A | | | | | | | | | | | | " | 1D2 | -0.7 | -2.4 | " |
| " | " | " | 33 CKT B | | | | | | | | | | | | " | 1D2 | -0.7 | -1.6 | " |
| " | " | " | 33 CKT C | | | | | | | | | | | | " | 1D2 | -0.5 | -1.4 | " |
| " | " | " | 34 CKT A | | | | | | | | | | | | " | 1D3 | -0.7 | -2.4 | " |
| " | " | " | 34 CKT B | | | | | | | | | | | | " | 1D3 | -0.7 | -1.6 | " |
| " | " | " | 34 CKT C | | | | | | | | | | | | " | 1D3 | -0.5 | -1.4 | " |
| " | " | " | 35 CKT A | GND | GND | | -0.4 V | | | | | | | | " | 2D0 | -0.7 | -2.4 | " |
| " | " | " | 35 CKT B | " | " | | " | | | | | | | | " | 2D0 | -0.7 | -1.6 | " |
| " | " | " | 35 CKT C | " | " | | " | | | | | | | | " | 2D0 | -0.5 | -1.4 | " |
| " | " | " | 36 CKT A | " | " | | | | -0.4 V | | | | | | " | 2D1 | -0.7 | -2.4 | " |
| " | " | " | 36 CKT B | " | " | | | | " | | | | | | " | 2D1 | -0.7 | -1.6 | " |
| " | " | " | 36 CKT C | " | " | | | | " | | | | | | " | 2D1 | -0.5 | -1.4 | " |

TABLE III. Group A inspection for device type 03.

Terminal conditions (pins not designated may be H ≥ 2.0 V, or L ≤ 0.8 V, or open).

| Subgroup | Symbol | MIL-STD-883 method | Case J, K, L, Z | 1 | 2 | 3 | 4 | 5 | 6 | 7 | 8 | 9 | 10 | 11 | 12 | Meas. terminal | Test limits | | |
|---|---|---|---|---|---|---|---|---|---|---|---|---|---|---|---|---|---|---|---|
| | | | Test No. | 1 $\overline{MR}$ | 1 $\overline{E}$ 0 | 1 $\overline{E}$ 1 | 1D0 | 1Q0 | 1D1 | 1Q1 | 1D2 | 1Q2 | 1D3 | 1Q3 | GND | | Min | Max | Unit |
| 1 | $I_{IL1}$ | 3009 | 37 CKT A | | | | | | | | | | | | GND | 2D2 | -0.7 | -2.4 | mA |
| $T_C$ = 25°C | " | " | 37 CKT B | | | | | | | | | | | | " | 2D2 | -0.7 | -1.6 | " |
| " | " | " | 37 CKT C | | | | | | | | | | | | " | 2D2 | -0.5 | -1.4 | " |
| " | " | " | 38 CKT A | | | | | | | | | | | | " | 2D3 | -0.7 | -2.4 | " |
| " | " | " | 38 CKT B | | | | | | | | | | | | " | 2D3 | -0.7 | -1.6 | " |
| " | " | " | 38 CKT C | | | | | | | | | | | | " | 2D3 | -0.5 | -1.4 | " |
| " | $I_{IL2}$ | " | 39 | 0.4 V | | | | | | | | | | | " | 1 $\overline{MR}$ | -0.7 | -1.6 | " |
| " | " | " | 40 | | 0.4 V | 5.5 V | | | | | | | | | " | 1 $\overline{E}$ 0 | " | " | " |
| " | " | " | 41 | | 5.5 V | 0.4 V | | | | | | | | | " | 1 $\overline{E}$ 1 | " | " | " |
| " | " | " | 42 | | | | | | | | | | | | " | 2 $\overline{MR}$ | " | " | " |
| " | " | " | 43 | | | | | | | | | | | | " | 2 $\overline{E}$ 0 | " | " | " |
| " | " | " | 44 | | | | | | | | | | | | " | 2 $\overline{E}$ 1 | " | " | " |
| " | $I_{IH1}$ | 3010 | 45 CKT A | | | 5.5 V | 2.4 V | | | | | | | | " | 1D0 | | 40 | μA |
| " | " | " | 45 CKT B, C | | | " | 2.4 V | | | | | | | | " | 1D0 | | 80 | " |
| " | " | " | 46 CKT A | | | " | | | 2.4 V | | | | | | " | 1D1 | | 40 | " |
| " | " | " | 46 CKT B, C | | | " | | | 2.4 V | | | | | | " | 1D1 | | 80 | " |
| " | " | " | 47 CKT A | | | " | | | | | 2.4 V | | | | " | 1D2 | | 40 | " |
| " | " | " | 47 CKT B, C | | | " | | | | | 2.4 V | | | | " | 1D2 | | 80 | " |
| " | " | " | 48 CKT A | | | " | | | | | | | 2.4 V | | " | 1D3 | | 40 | " |
| " | " | " | 48 CKT B, C | | | " | | | | | | | 2.4 V | | " | 1D3 | | 80 | " |
| " | " | " | 49 CKT A | | | | | | | | | | | | " | 2D0 | | 40 | " |
| " | " | " | 49 CKT B, C | | | | | | | | | | | | " | 2D0 | | 80 | " |
| " | " | " | 50 CKT A | | | | | | | | | | | | " | 2D1 | | 40 | " |
| " | " | " | 50 CKT B, C | | | | | | | | | | | | " | 2D1 | | 80 | " |
| " | " | " | 51 CKT A | | | | | | | | | | | | " | 2D2 | | 40 | " |
| " | " | " | 51 CKT B, C | | | | | | | | | | | | " | 2D2 | | 80 | " |
| " | " | " | 52 CKT A | | | | | | | | | | | | " | 2D3 | | 40 | " |
| " | " | " | 52 CKT B, C | | | | | | | | | | | | " | 2D3 | | 80 | " |
| " | $I_{IH2}$ | 3010 | 53 CKT A | | | 5.5 V | 5.5 V | | | | | | | | " | 1D0 | | 100 | " |
| " | " | " | 53 CKT B, C | | | " | 5.5 V | | | | | | | | " | 1D0 | | 200 | " |
| " | " | " | 54 CKT A | | | " | | | 5.5 V | | | | | | " | 1D1 | | 100 | " |
| " | " | " | 54 CKT B, C | | | " | | | 5.5 V | | | | | | " | 1D1 | | 200 | " |
| " | " | " | 55 CKT A | | | " | | | | | 5.5 V | | | | " | 1D2 | | 100 | " |
| " | " | " | 55 CKT B, C | | | " | | | | | 5.5 V | | | | " | 1D2 | | 200 | " |
| " | " | " | 56 CKT A | | | " | | | | | | | 5.5 V | | " | 1D3 | | 100 | " |
| " | " | " | 56 CKT B, C | | | " | | | | | | | 5.5 V | | " | 1D3 | | 200 | " |
| " | " | " | 57 CKT A | | | | | | | | | | | | " | 2D0 | | 100 | " |
| " | " | " | 57 CKT B, C | | | | | | | | | | | | " | 2D0 | | 200 | " |
| " | " | " | 58 CKT A | | | | | | | | | | | | " | 2D1 | | 100 | " |
| " | " | " | 58 CKT B, C | | | | | | | | | | | | " | 2D1 | | 200 | " |
| " | " | " | 59 CKT A | | | | | | | | | | | | " | 2D2 | | 100 | " |
| " | " | " | 59 CKT B, C | | | | | | | | | | | | " | 2D2 | | 200 | " |
| " | " | " | 60 CKT A | | | | | | | | | | | | " | 2D3 | | 100 | " |
| " | " | " | 60 CKT B, C | | | | | | | | | | | | " | 2D3 | | 200 | " |

TABLE III. Group A inspection for device type 03.

Terminal conditions (pins not designated may be H ≥ 2.0 V, or L ≤ 0.8 V, or open).

| Subgroup | Symbol | MIL-STD-883 method | Case J, K, L, Z | 13 | 14 | 15 | 16 | 17 | 18 | 19 | 20 | 21 | 22 | 23 | 24 | Meas. terminal | Test limits | | |
|---|---|---|---|---|---|---|---|---|---|---|---|---|---|---|---|---|---|---|---|
| | | | Test No. | 2 $\overline{MR}$ | 2 $\overline{E}$ 0 | 2 $\overline{E}$ 1 | 2D0 | 2Q0 | 2D1 | 2Q1 | 2D2 | 2Q2 | 2D3 | 2Q3 | $V_{CC}$ | | Min | Max | Unit |
| 1 | $I_{IL1}$ | 3009 | 37 CKT A | GND | GND | | | | | | 0.4 V | | | | 5.5 V | 2D2 | -0.7 | -2.4 | mA |
| $T_C$ = 25°C | " | " | 37 CKT B | " | " | | | | | | " | | | | " | 2D2 | -0.7 | -1.6 | " |
| " | " | " | 37 CKT C | " | " | | | | | | " | | | | " | 2D2 | -0.5 | -1.4 | " |
| " | " | " | 38 CKT A | " | " | | | | | | | | 0.4 V | | " | 2D3 | -0.7 | -2.4 | " |
| " | " | " | 38 CKT B | " | " | | | | | | | | " | | " | 2D3 | -0.7 | -1.6 | " |
| " | " | " | 38 CKT C | " | " | | | | | | | | " | | " | 2D3 | -0.5 | -1.4 | " |
| " | $I_{IL2}$ | " | 39 | | | | | | | | | | | | " | 1 $\overline{MR}$ | -0.7 | -1.6 | " |
| " | " | " | 40 | | | | | | | | | | | | " | 1 $\overline{E}$ 0 | " | " | " |
| " | " | " | 41 | | | | | | | | | | | | " | 1 $\overline{E}$ 1 | " | " | " |
| " | " | " | 42 | 0.4 V | | | | | | | | | | | " | 2 $\overline{MR}$ | " | " | " |
| " | " | " | 43 | | 0.4 V | 5.5 V | | | | | | | | | " | 2 $\overline{E}$ 0 | " | " | " |
| " | " | " | 44 | | 5.5 V | 0.4 V | | | | | | | | | " | 2 $\overline{E}$ 1 | " | " | " |
| " | $I_{IH1}$ | 3010 | 45 CKT A | | | | | | | | | | | | " | 1D0 | | 40 | μA |
| " | " | " | 45 CKT B, C | | | | | | | | | | | | " | 1D0 | | 80 | " |
| " | " | " | 46 CKT A | | | | | | | | | | | | " | 1D1 | | 40 | " |
| " | " | " | 46 CKT B, C | | | | | | | | | | | | " | 1D1 | | 80 | " |
| " | " | " | 47 CKT A | | | | | | | | | | | | " | 1D2 | | 40 | " |
| " | " | " | 47 CKT B, C | | | | | | | | | | | | " | 1D2 | | 80 | " |
| " | " | " | 48 CKT A | | | | | | | | | | | | " | 1D3 | | 40 | " |
| " | " | " | 48 CKT B, C | | | | | | | | | | | | " | 1D3 | | 80 | " |
| " | " | " | 49 CKT A | | | 5.5 V | 2.4 V | | | | | | | | " | 2D0 | | 40 | " |
| " | " | " | 49 CKT B, C | | | " | 2.4 V | | | | | | | | " | 2D0 | | 80 | " |
| " | " | " | 50 CKT A | | | " | | | 2.4 V | | | | | | " | 2D1 | | 40 | " |
| " | " | " | 50 CKT B, C | | | " | | | 2.4 V | | | | | | " | 2D1 | | 80 | " |
| " | " | " | 51 CKT A | | | " | | | | | 2.4 V | | | | " | 2D2 | | 40 | " |
| " | " | " | 51 CKT B, C | | | " | | | | | 2.4 V | | | | " | 2D2 | | 80 | " |
| " | " | " | 52 CKT A | | | " | | | | | | | 2.4 V | | " | 2D3 | | 40 | " |
| " | " | " | 52 CKT B, C | | | " | | | | | | | 2.4 V | | " | 2D3 | | 80 | " |
| " | $I_{IH2}$ | 3010 | 53 CKT A | | | | | | | | | | | | " | 1D0 | | 100 | " |
| " | " | " | 53 CKT B, C | | | | | | | | | | | | " | 1D0 | | 200 | " |
| " | " | " | 54 CKT A | | | | | | | | | | | | " | 1D1 | | 100 | " |
| " | " | " | 54 CKT B, C | | | | | | | | | | | | " | 1D1 | | 200 | " |
| " | " | " | 55 CKT A | | | | | | | | | | | | " | 1D2 | | 100 | " |
| " | " | " | 55 CKT B, C | | | | | | | | | | | | " | 1D2 | | 200 | " |
| " | " | " | 56 CKT A | | | | | | | | | | | | " | 1D3 | | 100 | " |
| " | " | " | 56 CKT B, C | | | | | | | | | | | | " | 1D3 | | 200 | " |
| " | " | " | 57 CKT A | | | 5.5 V | 5.5 V | | | | | | | | " | 2D0 | | 100 | " |
| " | " | " | 57 CKT B, C | | | " | 5.5 V | | | | | | | | " | 2D0 | | 200 | " |
| " | " | " | 58 CKT A | | | " | | | 5.5 V | | | | | | " | 2D1 | | 100 | " |
| " | " | " | 58 CKT B, C | | | " | | | 5.5 V | | | | | | " | 2D1 | | 200 | " |
| " | " | " | 59 CKT A | | | " | | | | | 5.5 V | | | | " | 2D2 | | 100 | " |
| " | " | " | 59 CKT B, C | | | " | | | | | 5.5 V | | | | " | 2D2 | | 200 | " |
| " | " | " | 60 CKT A | | | " | | | | | | | 5.5 V | | " | 2D3 | | 100 | " |
| " | " | " | 60 CKT B, C | | | " | | | | | | | 5.5 V | | " | 2D3 | | 200 | " |

TABLE III. Group A inspection for device type 03.
Terminal conditions (pins not designated may be H ≥ 2.0 V, or L ≤ 0.8 V, or open).

| Subgroup | Symbol | MIL-STD-883 method | Case J, K, L, Z | 1 | 2 | 3 | 4 | 5 | 6 | 7 | 8 | 9 | 10 | 11 | 12 | Meas. terminal | Test limits | | |
|---|---|---|---|---|---|---|---|---|---|---|---|---|---|---|---|---|---|---|---|
| | | | Test No. | 1 $\overline{MR}$ | 1 $\overline{E}$ 0 | 1 $\overline{E}$ 1 | 1D0 | 1Q0 | 1D1 | 1Q1 | 1D2 | 1Q2 | 1D3 | 1Q3 | GND | | Min | Max | Unit |
| 1 | $I_{IH3}$ | 3010 | 61 | 2.4 V | | | | | | | | | | | GND | 1 $\overline{MR}$ | | 40 | μA |
| $T_C$ = 25°C | " | " | 62 | | 2.4 V | GND | | | | | | | | | " | 1 $\overline{E}$ 0 | | " | " |
| " | " | " | 63 | | GND | 2.4 V | | | | | | | | | " | 1 $\overline{E}$ 1 | | " | " |
| " | " | " | 64 | | | | | | | | | | | | " | 2 $\overline{MR}$ | | " | " |
| " | " | " | 65 | | | | | | | | | | | | " | 2 $\overline{E}$ 0 | | " | " |
| " | " | " | 66 | | | | | | | | | | | | " | 2 $\overline{E}$ 1 | | " | " |
| " | $I_{IH4}$ | " | 67 | 5.5 V | | | | | | | | | | | " | 1 $\overline{MR}$ | | 100 | " |
| " | " | " | 68 | | 5.5 V | GND | | | | | | | | | " | 1 $\overline{E}$ 0 | | " | " |
| " | " | " | 69 | | GND | 5.5 V | | | | | | | | | " | 1 $\overline{E}$ 1 | | " | " |
| " | " | " | 70 | | | | | | | | | | | | " | 2 $\overline{MR}$ | | " | " |
| " | " | " | 71 | | | | | | | | | | | | " | 2 $\overline{E}$ 0 | | " | " |
| " | " | " | 72 | | | | | | | | | | | | " | 2 $\overline{E}$ 1 | | " | " |
| " | $I_{OS}$ | 3011 | 73 | 4.5 V | GND | GND | 4.5 V | GND | 4.5 V | | 4.5 V | | 4.5 V | | " | 1Q0 | -10 1/ | -70 | mA |
| " | " | " | 74 | " | " | " | " | | " | GND | " | | " | | " | 1Q1 | " | " | " |
| " | " | " | 75 | " | " | " | " | | " | | " | GND | " | | " | 1Q2 | " | " | " |
| " | " | " | 76 | " | " | " | " | | " | | " | | " | GND | " | 1Q3 | " | " | " |
| " | " | " | 77 | " | " | " | " | | " | | " | | " | | " | 2Q0 | " | " | " |
| " | " | " | 78 | " | " | " | " | | " | | " | | " | | " | 2Q1 | " | " | " |
| " | " | " | 79 | " | " | " | " | | " | | " | | " | | " | 2Q2 | " | " | " |
| " | " | " | 80 | " | " | " | " | | " | | " | | " | | " | 2Q3 | " | " | " |
| " | $I_{CC}$ | 3005 | 81 | 4.5 V | 4.5 V | 4.5 V | 4.5 V | | 4.5 V | | 4.5 V | | 4.5 V | | " | $V_{CC}$ | | 106 | mA |
| 2 | Same tests, terminal conditions and limits as for subgroup 1, except $T_C$ = 125°C and $V_{IC}$ tests are omitted. | | | | | | | | | | | | | | | | | | |
| 3 | Same tests, terminal conditions and limits as for subgroup 1, except $T_C$ = -55°C and $V_{IC}$ tests are omitted. | | | | | | | | | | | | | | | | | | |
| 9 | $t_{PLH1}$ | 3003 | 82 | 5.0 V | IN | GND | IN | OUT | | | | | | | GND | 1 $\overline{E}$ 0-1Q0 | 3 | 33 | ns |
| $T_C$ = 25°C | " | Fig 6-B | 83 | " | " | " | | | IN | OUT | | | | | " | 1 $\overline{E}$ 1-1Q1 | " | " | " |
| " | " | " | 84 | " | " | " | | | | | IN | OUT | | | " | 1 $\overline{E}$ 2-1Q2 | " | " | " |
| " | " | " | 85 | " | " | " | | | | | | | IN | OUT | " | 1 $\overline{E}$ 3-1Q3 | " | " | " |
| " | " | " | 86 | " | GND | IN | IN | OUT | | | | | | | " | 1 $\overline{E}$ 0-1Q0 | " | " | " |
| " | " | " | 87 | " | " | " | | | IN | OUT | | | | | " | 1 $\overline{E}$ 1-1Q1 | " | " | " |
| " | " | " | 88 | " | " | " | | | | | IN | OUT | | | " | 1 $\overline{E}$ 2-1Q2 | " | " | " |
| " | " | " | 89 | " | " | " | | | | | | | IN | OUT | " | 1 $\overline{E}$ 3-1Q3 | " | " | " |
| " | " | " | 90 | " | | | | | | | | | | | " | 2 $\overline{E}$ 0-2Q0 | " | " | " |
| " | " | " | 91 | " | | | | | | | | | | | " | 2 $\overline{E}$ 1-2Q1 | " | " | " |
| " | " | " | 92 | " | | | | | | | | | | | " | 2 $\overline{E}$ 2-2Q2 | " | " | " |
| " | " | " | 93 | " | | | | | | | | | | | " | 2 $\overline{E}$ 3-2Q3 | " | " | " |
| " | " | " | 94 | " | | | | | | | | | | | " | 2 $\overline{E}$ 0-2Q0 | " | " | " |
| " | " | " | 95 | " | | | | | | | | | | | " | 2 $\overline{E}$ 1-2Q1 | " | " | " |
| " | " | " | 96 | " | | | | | | | | | | | " | 2 $\overline{E}$ 2-2Q2 | " | " | " |
| " | " | " | 97 | " | | | | | | | | | | | " | 2 $\overline{E}$ 3-2Q3 | " | " | " |

TABLE III. Group A inspection for device type 03.
Terminal conditions (pins not designated may be H ≥ 2.0 V, or L ≤ 0.8 V, or open).

| Subgroup | Symbol | MIL-STD-883 method | Case J, K, L, Z | 1 | 2 | 3 | 4 | 5 | 6 | 7 | 8 | 9 | 10 | 11 | 12 | Meas. terminal | Test limits | | |
|---|---|---|---|---|---|---|---|---|---|---|---|---|---|---|---|---|---|---|---|
| | | | Test No. | 2 $\overline{MR}$ | 2 $\overline{E}$ 0 | 2 $\overline{E}$ 1 | 2D0 | 2Q0 | 2D1 | 2Q1 | 2D2 | 2Q2 | 2D3 | 2Q3 | $V_{CC}$ | | Min | Max | Unit |
| 1 | $I_{IH3}$ | 3010 | 61 | | | | | | | | | | | | 5.5 V | 1 $\overline{MR}$ | | 40 | µA |
| $T_C$ = 25°C | " | " | 62 | | | | | | | | | | | | " | 1 $\overline{E}$ 0 | | " | " |
| " | " | " | 63 | | | | | | | | | | | | " | 1 $\overline{E}$ 1 | | " | " |
| " | " | " | 64 | 2.4 V | | | | | | | | | | | " | 2 $\overline{MR}$ | | " | " |
| " | " | " | 65 | | 2.4 V | GND | | | | | | | | | " | 2 $\overline{E}$ 0 | | " | " |
| " | " | " | 66 | | GND | 2.4 V | | | | | | | | | " | 2 $\overline{E}$ 1 | | " | " |
| " | $I_{IH4}$ | " | 67 | | | | | | | | | | | | " | 1 $\overline{MR}$ | | 100 | " |
| " | " | " | 68 | | | | | | | | | | | | " | 1 $\overline{E}$ 0 | | " | " |
| " | " | " | 69 | | | | | | | | | | | | " | 1 $\overline{E}$ 1 | | " | " |
| " | " | " | 70 | 5.5 V | | | | | | | | | | | " | 2 $\overline{MR}$ | | " | " |
| " | " | " | 71 | | 5.5 V | GND | | | | | | | | | " | 2 $\overline{E}$ 0 | | " | " |
| " | " | " | 72 | | GND | 5.5 V | | | | | | | | | " | 2 $\overline{E}$ 1 | | " | " |
| " | $I_{OS}$ | 3011 | 73 | 4.5 V | GND | GND | 4.5 V | | 4.5 V | | 4.5 V | | 4.5 V | | " | 1Q0 | -10 1/ | -70 | mA |
| " | " | " | 74 | " | " | " | " | | " | | " | | " | | " | 1Q1 | " | " | " |
| " | " | " | 75 | " | " | " | " | | " | | " | | " | | " | 1Q2 | " | " | " |
| " | " | " | 76 | " | " | " | " | | " | | " | | " | | " | 1Q3 | " | " | " |
| " | " | " | 77 | " | " | " | " | GND | " | | " | | " | | " | 2Q0 | " | " | " |
| " | " | " | 78 | " | " | " | " | | " | GND | " | | " | | " | 2Q1 | " | " | " |
| " | " | " | 79 | " | " | " | " | | " | | " | GND | " | | " | 2Q2 | " | " | " |
| " | " | " | 80 | " | " | " | " | | " | | " | | " | GND | " | 2Q3 | " | " | " |
| " | $I_{CC}$ | 3005 | 81 | 4.5 V | 4.5 V | 4.5 V | 4.5 V | | 4.5 V | | 4.5 V | | 4.5 V | | " | $V_{CC}$ | | 106 | mA |
| 2 | Same tests, terminal conditions and limits as for subgroup 1, except $T_C$ = 125°C and $V_{IC}$ tests are omitted. | | | | | | | | | | | | | | | | | | |
| 3 | Same tests, terminal conditions and limits as for subgroup 1, except $T_C$ = -55°C and $V_{IC}$ tests are omitted. | | | | | | | | | | | | | | | | | | |
| 9 | $t_{PLH1}$ | 3003 | 82 | 5.0 V | | | | | | | | | | | 5.0 V | 1 $\overline{E}$ 0-1Q0 | 3 | 33 | ns |
| $T_C$ = 25°C | " | Fig 6-B | 83 | " | | | | | | | | | | | " | 1 $\overline{E}$ 1-1Q1 | " | " | " |
| " | " | " | 84 | " | | | | | | | | | | | " | 1 $\overline{E}$ 2-1Q2 | " | " | " |
| " | " | " | 85 | " | | | | | | | | | | | " | 1 $\overline{E}$ 3-1Q3 | " | " | " |
| " | " | " | 86 | " | | | | | | | | | | | " | 1 $\overline{E}$ 0-1Q0 | " | " | " |
| " | " | " | 87 | " | | | | | | | | | | | " | 1 $\overline{E}$ 1-1Q1 | " | " | " |
| " | " | " | 88 | " | | | | | | | | | | | " | 1 $\overline{E}$ 2-1Q2 | " | " | " |
| " | " | " | 89 | " | | | | | | | | | | | " | 1 $\overline{E}$ 3-1Q3 | " | " | " |
| " | " | " | 90 | " | IN | GND | IN | OUT | | | | | | | " | 2 $\overline{E}$ 0-2Q0 | " | " | " |
| " | " | " | 91 | " | " | " | | | IN | OUT | | | | | " | 2 $\overline{E}$ 1-2Q1 | " | " | " |
| " | " | " | 92 | " | " | " | | | | | IN | OUT | | | " | 2 $\overline{E}$ 2-2Q2 | " | " | " |
| " | " | " | 93 | " | " | " | | | | | | | IN | OUT | " | 2 $\overline{E}$ 3-2Q3 | " | " | " |
| " | " | " | 94 | " | GND | IN | IN | OUT | | | | | | | " | 2 $\overline{E}$ 0-2Q0 | " | " | " |
| " | " | " | 95 | " | " | " | | | IN | OUT | | | | | " | 2 $\overline{E}$ 1-2Q1 | " | " | " |
| " | " | " | 96 | " | " | " | | | | | IN | OUT | | | " | 2 $\overline{E}$ 2-2Q2 | " | " | " |
| " | " | " | 97 | " | " | " | | | | | | | IN | OUT | " | 2 $\overline{E}$ 3-2Q3 | " | " | " |

1/ Circuit B and C limits for $I_{OS}$ shall be -20, minimum and -57, maximum.

TABLE III. Group A inspection for device type 03.
Terminal conditions (pins not designated may be H ≥ 2.0 V, or L ≤ 0.8 V, or open).

| Subgroup | Symbol | MIL-STD-883 method | Case J, K, L, Z | 1 | 2 | 3 | 4 | 5 | 6 | 7 | 8 | 9 | 10 | 11 | 12 | Meas. terminal | Test limits | | |
|---|---|---|---|---|---|---|---|---|---|---|---|---|---|---|---|---|---|---|---|
| | | | Test No. | 1 $\overline{MR}$ | 1 $\overline{E}$ 0 | 1 $\overline{E}$ 1 | 1D0 | 1Q0 | 1D1 | 1Q1 | 1D2 | 1Q2 | 1D3 | 1Q3 | GND | | Min | Max | Unit |
| 9 | $t_{PHL1}$ | 3003 | 98 | 5.0 V | IN | GND | IN | OUT | | | | | | | GND | 1 $\overline{E}$ 0-1Q0 | 3 | 25 | ns |
| $T_C$ = 25°C | " | Fig 6-A | 99 | " | " | " | | | IN | OUT | | | | | " | 1 $\overline{E}$ 1-1Q1 | " | " | " |
| " | " | " | 100 | " | " | " | | | | | IN | OUT | | | " | 1 $\overline{E}$ 2-1Q2 | " | " | " |
| " | " | " | 101 | " | " | " | | | | | | | IN | OUT | " | 1 $\overline{E}$ 3-1Q3 | " | " | " |
| " | " | " | 102 | " | GND | IN | IN | OUT | | | | | | | " | 1 $\overline{E}$ 0-1Q0 | " | " | " |
| " | " | " | 103 | " | " | " | | | IN | OUT | | | | | " | 1 $\overline{E}$ 1-1Q1 | " | " | " |
| " | " | " | 104 | " | " | " | | | | | IN | OUT | | | " | 1 $\overline{E}$ 2-1Q2 | " | " | " |
| " | " | " | 105 | " | " | " | | | | | | | IN | OUT | " | 1 $\overline{E}$ 3-1Q3 | " | " | " |
| " | " | " | 106 | " | | | | | | | | | | | " | 2 $\overline{E}$ 0-2Q0 | " | " | " |
| " | " | " | 107 | " | | | | | | | | | | | " | 2 $\overline{E}$ 1-2Q1 | " | " | " |
| " | " | " | 108 | " | | | | | | | | | | | " | 2 $\overline{E}$ 2-2Q2 | " | " | " |
| " | " | " | 109 | " | | | | | | | | | | | " | 2 $\overline{E}$ 3-2Q3 | " | " | " |
| " | " | " | 110 | " | | | | | | | | | | | " | 2 $\overline{E}$ 0-2Q0 | " | " | " |
| " | " | " | 111 | " | | | | | | | | | | | " | 2 $\overline{E}$ 1-2Q1 | " | " | " |
| " | " | " | 112 | " | | | | | | | | | | | " | 2 $\overline{E}$ 2-2Q2 | " | " | " |
| " | " | " | 113 | " | | | | | | | | | | | " | 2 $\overline{E}$ 3-2Q3 | " | " | " |
| " | $t_{PLH2}$ | 3003 | 114 | " | IN | GND | IN | OUT | | | | | | | " | 1D0-1Q0 | " | 33 | " |
| " | " | Fig 6 | 115 | " | " | " | | | IN | OUT | | | | | " | 1D1-1Q1 | " | " | " |
| " | " | " | 116 | " | " | " | | | | | IN | OUT | | | " | 1D2-1Q2 | " | " | " |
| " | " | " | 117 | " | " | " | | | | | | | IN | OUT | " | 1D3-1Q3 | " | " | " |
| " | " | " | 118 | " | GND | IN | IN | OUT | | | | | | | " | 1D0-1Q0 | " | " | " |
| " | " | " | 119 | " | " | " | | | IN | OUT | | | | | " | 1D1-1Q1 | " | " | " |
| " | " | " | 120 | " | " | " | | | | | IN | OUT | | | " | 1D2-1Q2 | " | " | " |
| " | " | " | 121 | " | " | " | | | | | | | IN | OUT | " | 1D3-1Q3 | " | " | " |
| " | " | " | 122 | " | | | | | | | | | | | " | 2D0-2Q0 | " | " | " |
| " | " | " | 123 | " | | | | | | | | | | | " | 2D1-2Q1 | " | " | " |
| " | " | " | 124 | " | | | | | | | | | | | " | 2D2-2Q2 | " | " | " |
| " | " | " | 125 | " | | | | | | | | | | | " | 2D3-2Q3 | " | " | " |
| " | " | " | 126 | " | | | | | | | | | | | " | 2D0-2Q0 | " | " | " |
| " | " | " | 127 | " | | | | | | | | | | | " | 2D1-2Q1 | " | " | " |
| " | " | " | 128 | " | | | | | | | | | | | " | 2D2-2Q2 | " | " | " |
| " | " | " | 129 | " | | | | | | | | | | | " | 2D3-2Q3 | " | " | " |

TABLE III. Group A inspection for device type 03.
Terminal conditions (pins not designated may be H ≥ 2.0 V, or L ≤ 0.8 V, or open).

| Subgroup | Symbol | MIL-STD-883 method | Case J, K, L, Z | 13 | 14 | 15 | 16 | 17 | 18 | 19 | 20 | 21 | 22 | 23 | 24 | Meas. terminal | Test limits | | |
|---|---|---|---|---|---|---|---|---|---|---|---|---|---|---|---|---|---|---|---|
| | | | Test No. | 2 $\overline{MR}$ | 2 $\overline{E}$ 0 | 2 $\overline{E}$ 1 | 2D0 | 2Q0 | 2D1 | 2Q1 | 2D2 | 2Q2 | 2D3 | 2Q3 | $V_{CC}$ | | Min | Max | Unit |
| 9 | $t_{PHL1}$ | 3003 | 98 | 5.0 V | | | | | | | | | | | 5.0 V | 1 $\overline{E}$ 0-1Q0 | 3 | 25 | ns |
| $T_C$ = 25°C | " | Fig 6-A | 99 | " | | | | | | | | | | | " | 1 $\overline{E}$ 1-1Q1 | " | " | " |
| " | " | " | 100 | " | | | | | | | | | | | " | 1 $\overline{E}$ 2-1Q2 | " | " | " |
| " | " | " | 101 | " | | | | | | | | | | | " | 1 $\overline{E}$ 3-1Q3 | " | " | " |
| " | " | " | 102 | " | | | | | | | | | | | " | 1 $\overline{E}$ 0-1Q0 | " | " | " |
| " | " | " | 103 | " | | | | | | | | | | | " | 1 $\overline{E}$ 1-1Q1 | " | " | " |
| " | " | " | 104 | " | | | | | | | | | | | " | 1 $\overline{E}$ 2-1Q2 | " | " | " |
| " | " | " | 105 | " | | | | | | | | | | | " | 1 $\overline{E}$ 3-1Q3 | " | " | " |
| " | " | " | 106 | " | IN | GND | IN | OUT | | | | | | | " | 2 $\overline{E}$ 0-2Q0 | " | " | " |
| " | " | " | 107 | " | " | " | | | IN | OUT | | | | | " | 2 $\overline{E}$ 1-2Q1 | " | " | " |
| " | " | " | 108 | " | " | " | | | | | IN | OUT | | | " | 2 $\overline{E}$ 2-2Q2 | " | " | " |
| " | " | " | 109 | " | " | " | | | | | | | IN | OUT | " | 2 $\overline{E}$ 3-2Q3 | " | " | " |
| " | " | " | 110 | " | GND | IN | IN | OUT | | | | | | | " | 2 $\overline{E}$ 0-2Q0 | " | " | " |
| " | " | " | 111 | " | " | " | | | IN | OUT | | | | | " | 2 $\overline{E}$ 1-2Q1 | " | " | " |
| " | " | " | 112 | " | " | " | | | | | IN | OUT | | | " | 2 $\overline{E}$ 2-2Q2 | " | " | " |
| " | " | " | 113 | " | " | " | | | | | | | IN | OUT | " | 2 $\overline{E}$ 3-2Q3 | " | " | " |
| " | $t_{PLH2}$ | 3003 | 114 | " | | | | | | | | | | | " | 1D0-1Q0 | " | 33 | " |
| " | " | Fig 6 | 115 | " | | | | | | | | | | | " | 1D1-1Q1 | " | " | " |
| " | " | " | 116 | " | | | | | | | | | | | " | 1D2-1Q2 | " | " | " |
| " | " | " | 117 | " | | | | | | | | | | | " | 1D3-1Q3 | " | " | " |
| " | " | " | 118 | " | | | | | | | | | | | " | 1D0-1Q0 | " | " | " |
| " | " | " | 119 | " | | | | | | | | | | | " | 1D1-1Q1 | " | " | " |
| " | " | " | 120 | " | | | | | | | | | | | " | 1D2-1Q2 | " | " | " |
| " | " | " | 121 | " | | | | | | | | | | | " | 1D3-1Q3 | " | " | " |
| " | " | " | 122 | " | IN | GND | IN | OUT | | | | | | | " | 2D0-2Q0 | " | " | " |
| " | " | " | 123 | " | " | " | | | IN | OUT | | | | | " | 2D1-2Q1 | " | " | " |
| " | " | " | 124 | " | " | " | | | | | IN | OUT | | | " | 2D2-2Q2 | " | " | " |
| " | " | " | 125 | " | " | " | | | | | | | IN | OUT | " | 2D3-2Q3 | " | " | " |
| " | " | " | 126 | " | GND | IN | IN | OUT | | | | | | | " | 2D0-2Q0 | " | " | " |
| " | " | " | 127 | " | " | " | | | IN | OUT | | | | | " | 2D1-2Q1 | " | " | " |
| " | " | " | 128 | " | " | " | | | | | IN | OUT | | | " | 2D2-2Q2 | " | " | " |
| " | " | " | 129 | " | " | " | | | | | | | IN | OUT | " | 2D3-2Q3 | " | " | " |

TABLE III. Group A inspection for device type 03.
Terminal conditions (pins not designated may be H ≥ 2.0 V, or L ≤ 0.8 V, or open).

| Subgroup | Symbol | MIL-STD-883 method | Case J, K, L, Z | 1 | 2 | 3 | 4 | 5 | 6 | 7 | 8 | 9 | 10 | 11 | 12 | Meas. terminal | Test limits | | |
|---|---|---|---|---|---|---|---|---|---|---|---|---|---|---|---|---|---|---|---|
| | | | Test No. | 1 $\overline{MR}$ | 1 $\overline{E}$ 0 | 1 $\overline{E}$ 1 | 1D0 | 1Q0 | 1D1 | 1Q1 | 1D2 | 1Q2 | 1D3 | 1Q3 | GND | | Min | Max | Unit |
| 9 | $t_{PHL2}$ | 3003 | 130 | 5.0 V | IN | GND | IN | OUT | | | | | | | GND | 1D0-1Q0 | 3 | 28 | ns |
| $T_C$ = 25°C | " | Fig 6 | 131 | " | " | " | | | IN | OUT | | | | | " | 1D1-1Q1 | " | " | " |
| " | " | " | 132 | " | " | " | | | | | IN | OUT | | | " | 1D2-1Q2 | " | " | " |
| " | " | " | 133 | " | " | " | | | | | | | IN | OUT | " | 1D3-1Q3 | " | " | " |
| " | " | " | 134 | " | GND | IN | IN | OUT | | | | | | | " | 1D0-1Q0 | " | " | " |
| " | " | " | 135 | " | " | " | | | IN | OUT | | | | | " | 1D1-1Q1 | " | " | " |
| " | " | " | 136 | " | " | " | | | | | IN | OUT | | | " | 1D2-1Q2 | " | " | " |
| " | " | " | 137 | " | " | " | | | | | | | IN | OUT | " | 1D3-1Q3 | " | " | " |
| " | " | " | 138 | " | | | | | | | | | | | " | 2D0-2Q0 | " | " | " |
| " | " | " | 139 | " | | | | | | | | | | | " | 2D1-2Q1 | " | " | " |
| " | " | " | 140 | " | | | | | | | | | | | " | 2D2-2Q2 | " | " | " |
| " | " | " | 141 | " | | | | | | | | | | | " | 2D3-2Q3 | " | " | " |
| " | " | " | 142 | " | | | | | | | | | | | " | 2D0-2Q0 | " | " | " |
| " | " | " | 143 | " | | | | | | | | | | | " | 2D1-2Q1 | " | " | " |
| " | " | " | 144 | " | | | | | | | | | | | " | 2D2-2Q2 | " | " | " |
| " | " | " | 145 | " | | | | | | | | | | | " | 2D3-2Q3 | " | " | " |
| " | $t_{PHL3}$ | 3003 | 146 | IN | IN | GND | 5.0 V | OUT | 5.0 V | | 5.0 V | | 5.0 V | | " | 1 $\overline{MR}$ -1Q0 | " | 25 | " |
| " | " | Fig 6-C | 147 | " | " | " | " | | " | OUT | " | | " | | " | 1 $\overline{MR}$ -1Q1 | " | " | " |
| " | " | " | 148 | " | " | " | " | | " | | " | OUT | " | | " | 1 $\overline{MR}$ -1Q2 | " | " | " |
| " | " | " | 149 | " | " | " | " | | " | | " | | " | OUT | " | 1 $\overline{MR}$ -1Q3 | " | " | " |
| " | " | " | 150 | " | GND | IN | " | OUT | " | | " | | " | | " | 1 $\overline{MR}$ -1Q0 | " | " | " |
| " | " | " | 151 | " | " | " | " | | " | OUT | " | | " | | " | 1 $\overline{MR}$ -1Q1 | " | " | " |
| " | " | " | 152 | " | " | " | " | | " | | " | OUT | " | | " | 1 $\overline{MR}$ -1Q2 | " | " | " |
| " | " | " | 153 | " | " | " | " | | " | | " | | " | OUT | " | 1 $\overline{MR}$ -1Q3 | " | " | " |
| " | " | " | 154 | | | | | | | | | | | | " | 2 $\overline{MR}$ -2Q0 | " | " | " |
| " | " | " | 155 | | | | | | | | | | | | " | 2 $\overline{MR}$ -2Q1 | " | " | " |
| " | " | " | 156 | | | | | | | | | | | | " | 2 $\overline{MR}$ -2Q2 | " | " | " |
| " | " | " | 157 | | | | | | | | | | | | " | 2 $\overline{MR}$ -2Q3 | " | " | " |
| " | " | " | 158 | | | | | | | | | | | | " | 2 $\overline{MR}$ -2Q0 | " | " | " |
| " | " | " | 159 | | | | | | | | | | | | " | 2 $\overline{MR}$ -2Q1 | " | " | " |
| " | " | " | 160 | | | | | | | | | | | | " | 2 $\overline{MR}$ -2Q2 | " | " | " |
| " | " | " | 161 | | | | | | | | | | | | " | 2 $\overline{MR}$ -2Q3 | " | " | " |

TABLE III. Group A inspection for device type 03.
Terminal conditions (pins not designated may be H ≥ 2.0 V, or L ≤ 0.8 V, or open).

| Subgroup | Symbol | MIL-STD-883 method | Case J, K, L, Z | 13 | 14 | 15 | 16 | 17 | 18 | 19 | 20 | 21 | 22 | 23 | 24 | Meas. terminal | Test limits | | |
|---|---|---|---|---|---|---|---|---|---|---|---|---|---|---|---|---|---|---|---|
| | | | Test No. | 2 $\overline{MR}$ | 2 $\overline{E}$ 0 | 2 $\overline{E}$ 1 | 2D0 | 2Q0 | 2D1 | 2Q1 | 2D2 | 2Q2 | 2D3 | 2Q3 | $V_{CC}$ | | Min | Max | Unit |
| 9 | $t_{PHL2}$ | 3003 | 130 | 5.0 V | | | | | | | | | | | 5.0 V | 1D0-1Q0 | 3 | 28 | ns |
| $T_C$ = 25°C | " | Fig 6 | 131 | " | | | | | | | | | | | " | 1D1-1Q1 | " | " | " |
| " | " | " | 132 | " | | | | | | | | | | | " | 1D2-1Q2 | " | " | " |
| " | " | " | 133 | " | | | | | | | | | | | " | 1D3-1Q3 | " | " | " |
| " | " | " | 134 | " | | | | | | | | | | | " | 1D0-1Q0 | " | " | " |
| " | " | " | 135 | " | | | | | | | | | | | " | 1D1-1Q1 | " | " | " |
| " | " | " | 136 | " | | | | | | | | | | | " | 1D2-1Q2 | " | " | " |
| " | " | " | 137 | " | | | | | | | | | | | " | 1D3-1Q3 | " | " | " |
| " | " | " | 138 | " | IN | GND | IN | OUT | | | | | | | " | 2D0-2Q0 | " | " | " |
| " | " | " | 139 | " | " | " | | | IN | OUT | | | | | " | 2D1-2Q1 | " | " | " |
| " | " | " | 140 | " | " | " | | | | | IN | OUT | | | " | 2D2-2Q2 | " | " | " |
| " | " | " | 141 | " | " | " | | | | | | | IN | OUT | " | 2D3-2Q3 | " | " | " |
| " | " | " | 142 | " | GND | IN | IN | OUT | | | | | | | " | 2D0-2Q0 | " | " | " |
| " | " | " | 143 | " | " | " | | | IN | OUT | | | | | " | 2D1-2Q1 | " | " | " |
| " | " | " | 144 | " | " | " | | | | | IN | OUT | | | " | 2D2-2Q2 | " | " | " |
| " | " | " | 145 | " | " | " | | | | | | | IN | OUT | " | 2D3-2Q3 | " | " | " |
| " | $t_{PHL3}$ | 3003 | 146 | | | | | | | | | | | | " | 1 $\overline{MR}$ -1Q0 | " | 25 | " |
| " | " | Fig 6-C | 147 | | | | | | | | | | | | " | 1 $\overline{MR}$ -1Q1 | " | " | " |
| " | " | " | 148 | | | | | | | | | | | | " | 1 $\overline{MR}$ -1Q2 | " | " | " |
| " | " | " | 149 | | | | | | | | | | | | " | 1 $\overline{MR}$ -1Q3 | " | " | " |
| " | " | " | 150 | | | | | | | | | | | | " | 1 $\overline{MR}$ -1Q0 | " | " | " |
| " | " | " | 151 | | | | | | | | | | | | " | 1 $\overline{MR}$ -1Q1 | " | " | " |
| " | " | " | 152 | | | | | | | | | | | | " | 1 $\overline{MR}$ -1Q2 | " | " | " |
| " | " | " | 153 | | | | | | | | | | | | " | 1 $\overline{MR}$ -1Q3 | " | " | " |
| " | " | " | 154 | IN | IN | GND | 5.0 V | OUT | 5.0 V | | 5.0 V | | 5.0 V | | " | 2 $\overline{MR}$ -2Q0 | " | " | " |
| " | " | " | 155 | " | " | " | " | | " | OUT | " | | " | | " | 2 $\overline{MR}$ -2Q1 | " | " | " |
| " | " | " | 156 | " | " | " | " | | " | | " | OUT | " | | " | 2 $\overline{MR}$ -2Q2 | " | " | " |
| " | " | " | 157 | " | " | " | " | | " | | " | | " | OUT | " | 2 $\overline{MR}$ -2Q3 | " | " | " |
| " | " | " | 158 | " | GND | IN | " | OUT | " | | " | | " | | " | 2 $\overline{MR}$ -2Q0 | " | " | " |
| " | " | " | 159 | " | " | " | " | | " | OUT | " | | " | | " | 2 $\overline{MR}$ -2Q1 | " | " | " |
| " | " | " | 160 | " | " | " | " | | " | | " | OUT | " | | " | 2 $\overline{MR}$ -2Q2 | " | " | " |
| " | " | " | 161 | " | " | " | " | | " | | " | | " | OUT | " | 2 $\overline{MR}$ -2Q3 | " | " | " |

TABLE III. Group A inspection for device type 03.
Terminal conditions (pins not designated may be H ≥ 2.0 V, or L ≤ 0.8 V, or open).

| Subgroup | Symbol | MIL-STD-883 method | Case J, K, L, Z | 1 | 2 | 3 | 4 | 5 | 6 | 7 | 8 | 9 | 10 | 11 | 12 | Meas. terminal | Test limits | | |
|---|---|---|---|---|---|---|---|---|---|---|---|---|---|---|---|---|---|---|---|
| | | | Test No. | 1 $\overline{MR}$ | 1 $\overline{E}$ 0 | 1 $\overline{E}$ 1 | 1D0 | 1Q0 | 1D1 | 1Q1 | 1D2 | 1Q2 | 1D3 | 1Q3 | GND | | Min | Max | Unit |
| 10 | $t_{PLH1}$ | 3003 | 162 | 5.0 V | IN | GND | IN | OUT | | | | | | | GND | 1 $\overline{E}$ 0-1Q0 | 3 | 60 | ns |
| $T_C$ = 125°C | " | Fig 6-B | 163 | " | " | " | | | IN | OUT | | | | | " | 1 $\overline{E}$ 1-1Q1 | " | " | " |
| " | " | " | 164 | " | " | " | | | | | IN | OUT | | | " | 1 $\overline{E}$ 2-1Q2 | " | " | " |
| " | " | " | 165 | " | " | " | | | | | | | IN | OUT | " | 1 $\overline{E}$ 3-1Q3 | " | " | " |
| " | " | " | 166 | " | GND | IN | IN | OUT | | | | | | | " | 1 $\overline{E}$ 0-1Q0 | " | " | " |
| " | " | " | 167 | " | " | " | | | IN | OUT | | | | | " | 1 $\overline{E}$ 1-1Q1 | " | " | " |
| " | " | " | 168 | " | " | " | | | | | IN | OUT | | | " | 1 $\overline{E}$ 2-1Q2 | " | " | " |
| " | " | " | 169 | " | " | " | | | | | | | IN | OUT | " | 1 $\overline{E}$ 3-1Q3 | " | " | " |
| " | " | " | 170 | " | | | | | | | | | | | " | 2 $\overline{E}$ 0-2Q0 | " | " | " |
| " | " | " | 171 | " | | | | | | | | | | | " | 2 $\overline{E}$ 1-2Q1 | " | " | " |
| " | " | " | 172 | " | | | | | | | | | | | " | 2 $\overline{E}$ 2-2Q2 | " | " | " |
| " | " | " | 173 | " | | | | | | | | | | | " | 2 $\overline{E}$ 3-2Q3 | " | " | " |
| " | " | " | 174 | " | | | | | | | | | | | " | 2 $\overline{E}$ 0-2Q0 | " | " | " |
| " | " | " | 175 | " | | | | | | | | | | | " | 2 $\overline{E}$ 1-2Q1 | " | " | " |
| " | " | " | 176 | " | | | | | | | | | | | " | 2 $\overline{E}$ 2-2Q2 | " | " | " |
| " | " | " | 177 | " | | | | | | | | | | | " | 2 $\overline{E}$ 3-2Q3 | " | " | " |

TABLE III. Group A inspection for device type 03.
Terminal conditions (pins not designated may be H ≥ 2.0 V, or L ≤ 0.8 V, or open).

| Subgroup | Symbol | MIL-STD-883 method | Case J, K, L, Z | 1 | 2 | 3 | 4 | 5 | 6 | 7 | 8 | 9 | 10 | 11 | 12 | Meas. terminal | Test limits | | |
|---|---|---|---|---|---|---|---|---|---|---|---|---|---|---|---|---|---|---|---|
| | | | Test No. | 2 $\overline{MR}$ | 2 $\overline{E}$ 0 | 2 $\overline{E}$ 1 | 2D0 | 2Q0 | 2D1 | 2Q1 | 2D2 | 2Q2 | 2D3 | 2Q3 | $V_{CC}$ | | Min | Max | Unit |
| 10 | $t_{PLH1}$ | 3003 | 162 | 5.0 V | | | | | | | | | | | 5.0 V | 1 $\overline{E}$ 0-1Q0 | 3 | 60 | ns |
| $T_C$ = 125°C | " | Fig 6-B | 163 | " | | | | | | | | | | | " | 1 $\overline{E}$ 1-1Q1 | " | " | " |
| " | " | " | 164 | " | | | | | | | | | | | " | 1 $\overline{E}$ 2-1Q2 | " | " | " |
| " | " | " | 165 | " | | | | | | | | | | | " | 1 $\overline{E}$ 3-1Q3 | " | " | " |
| " | " | " | 166 | " | | | | | | | | | | | " | 1 $\overline{E}$ 0-1Q0 | " | " | " |
| " | " | " | 167 | " | | | | | | | | | | | " | 1 $\overline{E}$ 1-1Q1 | " | " | " |
| " | " | " | 168 | " | | | | | | | | | | | " | 1 $\overline{E}$ 2-1Q2 | " | " | " |
| " | " | " | 169 | " | | | | | | | | | | | " | 1 $\overline{E}$ 3-1Q3 | " | " | " |
| " | " | " | 170 | " | IN | GND | IN | OUT | | | | | | | " | 2 $\overline{E}$ 0-2Q0 | " | " | " |
| " | " | " | 171 | " | " | " | | | IN | OUT | | | | | " | 2 $\overline{E}$ 1-2Q1 | " | " | " |
| " | " | " | 172 | " | " | " | | | | | IN | OUT | | | " | 2 $\overline{E}$ 2-2Q2 | " | " | " |
| " | " | " | 173 | " | " | " | | | | | | | IN | OUT | " | 2 $\overline{E}$ 3-2Q3 | " | " | " |
| " | " | " | 174 | " | GND | IN | IN | OUT | | | | | | | " | 2 $\overline{E}$ 0-2Q0 | " | " | " |
| " | " | " | 175 | " | " | " | | | IN | OUT | | | | | " | 2 $\overline{E}$ 1-2Q1 | " | " | " |
| " | " | " | 176 | " | " | " | | | | | IN | OUT | | | " | 2 $\overline{E}$ 2-2Q2 | " | " | " |
| " | " | " | 177 | " | " | " | | | | | | | IN | OUT | " | 2 $\overline{E}$ 3-2Q3 | " | " | " |

TABLE III. Group A inspection for device type 03.
Terminal conditions (pins not designated may be H ≥ 2.0 V, or L ≤ 0.8 V, or open).

| Subgroup | Symbol | MIL-STD-883 method | Case J, K, L, Z | 1 | 2 | 3 | 4 | 5 | 6 | 7 | 8 | 9 | 10 | 11 | 12 | Meas. terminal | Test limits | | |
|---|---|---|---|---|---|---|---|---|---|---|---|---|---|---|---|---|---|---|---|
| | | | Test No. | 1 $\overline{MR}$ | 1 $\overline{E}$ 0 | 1 $\overline{E}$ 1 | 1D0 | 1Q0 | 1D1 | 1Q1 | 1D2 | 1Q2 | 1D3 | 1Q3 | GND | | Min | Max | Unit |
| 10 | $t_{PHL1}$ | 3003 | 178 | 5.0 V | IN | GND | IN | OUT | | | | | | | GND | 1 $\overline{E}$ 0-1Q0 | 3 | 40 | ns |
| $T_C$ = 125°C | " | Fig 6-A | 179 | " | " | " | | | IN | OUT | | | | | " | 1 $\overline{E}$ 1-1Q1 | " | " | " |
| " | " | " | 180 | " | " | " | | | | | IN | OUT | | | " | 1 $\overline{E}$ 2-1Q2 | " | " | " |
| " | " | " | 181 | " | " | " | | | | | | | IN | OUT | " | 1 $\overline{E}$ 3-1Q3 | " | " | " |
| " | " | " | 182 | " | GND | IN | IN | OUT | | | | | | | " | 1 $\overline{E}$ 0-1Q0 | " | " | " |
| " | " | " | 183 | " | " | " | | | IN | OUT | | | | | " | 1 $\overline{E}$ 1-1Q1 | " | " | " |
| " | " | " | 184 | " | " | " | | | | | IN | OUT | | | " | 1 $\overline{E}$ 2-1Q2 | " | " | " |
| " | " | " | 185 | " | " | " | | | | | | | IN | OUT | " | 1 $\overline{E}$ 3-1Q3 | " | " | " |
| " | " | " | 186 | " | | | | | | | | | | | " | 2 $\overline{E}$ 0-2Q0 | " | " | " |
| " | " | " | 187 | " | | | | | | | | | | | " | 2 $\overline{E}$ 1-2Q1 | " | " | " |
| " | " | " | 188 | " | | | | | | | | | | | " | 2 $\overline{E}$ 2-2Q2 | " | " | " |
| " | " | " | 189 | " | | | | | | | | | | | " | 2 $\overline{E}$ 3-2Q3 | " | " | " |
| " | " | " | 190 | " | | | | | | | | | | | " | 2 $\overline{E}$ 0-2Q0 | " | " | " |
| " | " | " | 191 | " | | | | | | | | | | | " | 2 $\overline{E}$ 1-2Q1 | " | " | " |
| " | " | " | 192 | " | | | | | | | | | | | " | 2 $\overline{E}$ 2-2Q2 | " | " | " |
| " | " | " | 193 | " | | | | | | | | | | | " | 2 $\overline{E}$ 3-2Q3 | " | " | " |
| " | $t_{PLH2}$ | 3003 | 194 | " | IN | GND | IN | OUT | | | | | | | " | 1D0-1Q0 | " | 49 | " |
| " | " | Fig 6 | 195 | " | " | " | | | IN | OUT | | | | | " | 1D1-1Q1 | " | " | " |
| " | " | " | 196 | " | " | " | | | | | IN | OUT | | | " | 1D2-1Q2 | " | " | " |
| " | " | " | 197 | " | " | " | | | | | | | IN | OUT | " | 1D3-1Q3 | " | " | " |
| " | " | " | 198 | " | GND | IN | IN | OUT | | | | | | | " | 1D0-1Q0 | " | " | " |
| " | " | " | 199 | " | " | " | | | IN | OUT | | | | | " | 1D1-1Q1 | " | " | " |
| " | " | " | 200 | " | " | " | | | | | IN | OUT | | | " | 1D2-1Q2 | " | " | " |
| " | " | " | 201 | " | " | " | | | | | | | IN | OUT | " | 1D3-1Q3 | " | " | " |
| " | " | " | 202 | " | | | | | | | | | | | " | 2D0-2Q0 | " | " | " |
| " | " | " | 203 | " | | | | | | | | | | | " | 2D1-2Q1 | " | " | " |
| " | " | " | 204 | " | | | | | | | | | | | " | 2D2-2Q2 | " | " | " |
| " | " | " | 205 | " | | | | | | | | | | | " | 2D3-2Q3 | " | " | " |
| " | " | " | 206 | " | | | | | | | | | | | " | 2D0-2Q0 | " | " | " |
| " | " | " | 207 | " | | | | | | | | | | | " | 2D1-2Q1 | " | " | " |
| " | " | " | 208 | " | | | | | | | | | | | " | 2D2-2Q2 | " | " | " |
| " | " | " | 209 | " | | | | | | | | | | | " | 2D3-2Q3 | " | " | " |

TABLE III. Group A inspection for device type 03.
Terminal conditions (pins not designated may be H ≥ 2.0 V, or L ≤ 0.8 V, or open).

| Subgroup | Symbol | MIL-STD-883 method | Case J, K, L, Z | 13 | 14 | 15 | 16 | 17 | 18 | 19 | 20 | 21 | 22 | 23 | 24 | Meas. terminal | Test limits | | |
|---|---|---|---|---|---|---|---|---|---|---|---|---|---|---|---|---|---|---|---|
| | | | Test No. | 2 $\overline{MR}$ | 2 $\overline{E}$ 0 | 2 $\overline{E}$ 1 | 2D0 | 2Q0 | 2D1 | 2Q1 | 2D2 | 2Q2 | 2D3 | 2Q3 | $V_{CC}$ | | Min | Max | Unit |
| 10 | $t_{PHL1}$ | 3003 | 178 | 5.0 V | | | | | | | | | | | 5.0 V | 1 $\overline{E}$ 0-1Q0 | 3 | 40 | ns |
| $T_C$ = 125°C | " | Fig 6-A | 179 | " | | | | | | | | | | | " | 1 $\overline{E}$ 1-1Q1 | " | " | " |
| " | " | " | 180 | " | | | | | | | | | | | " | 1 $\overline{E}$ 2-1Q2 | " | " | " |
| " | " | " | 181 | " | | | | | | | | | | | " | 1 $\overline{E}$ 3-1Q3 | " | " | " |
| " | " | " | 182 | " | | | | | | | | | | | " | 1 $\overline{E}$ 0-1Q0 | " | " | " |
| " | " | " | 183 | " | | | | | | | | | | | " | 1 $\overline{E}$ 1-1Q1 | " | " | " |
| " | " | " | 184 | " | | | | | | | | | | | " | 1 $\overline{E}$ 2-1Q2 | " | " | " |
| " | " | " | 185 | " | | | | | | | | | | | " | 1 $\overline{E}$ 3-1Q3 | " | " | " |
| " | " | " | 186 | " | IN | GND | IN | OUT | | | | | | | " | 2 $\overline{E}$ 0-2Q0 | " | " | " |
| " | " | " | 187 | " | " | " | | | IN | OUT | | | | | " | 2 $\overline{E}$ 1-2Q1 | " | " | " |
| " | " | " | 188 | " | " | " | | | | | IN | OUT | | | " | 2 $\overline{E}$ 2-2Q2 | " | " | " |
| " | " | " | 189 | " | " | " | | | | | | | IN | OUT | " | 2 $\overline{E}$ 3-2Q3 | " | " | " |
| " | " | " | 190 | " | GND | IN | IN | OUT | | | | | | | " | 2 $\overline{E}$ 0-2Q0 | " | " | " |
| " | " | " | 191 | " | " | " | | | IN | OUT | | | | | " | 2 $\overline{E}$ 1-2Q1 | " | " | " |
| " | " | " | 192 | " | " | " | | | | | IN | OUT | | | " | 2 $\overline{E}$ 2-2Q2 | " | " | " |
| " | " | " | 193 | " | " | " | | | | | | | IN | OUT | " | 2 $\overline{E}$ 3-2Q3 | " | " | " |
| " | $t_{PLH2}$ | 3003 | 194 | " | | | | | | | | | | | " | 1D0-1Q0 | " | 49 | " |
| " | " | Fig 6 | 195 | " | | | | | | | | | | | " | 1D1-1Q1 | " | " | " |
| " | " | " | 196 | " | | | | | | | | | | | " | 1D2-1Q2 | " | " | " |
| " | " | " | 197 | " | | | | | | | | | | | " | 1D3-1Q3 | " | " | " |
| " | " | " | 198 | " | | | | | | | | | | | " | 1D0-1Q0 | " | " | " |
| " | " | " | 199 | " | | | | | | | | | | | " | 1D1-1Q1 | " | " | " |
| " | " | " | 200 | " | | | | | | | | | | | " | 1D2-1Q2 | " | " | " |
| " | " | " | 201 | " | | | | | | | | | | | " | 1D3-1Q3 | " | " | " |
| " | " | " | 202 | " | IN | GND | IN | OUT | | | | | | | " | 2D0-2Q0 | " | " | " |
| " | " | " | 203 | " | " | " | | | IN | OUT | | | | | " | 2D1-2Q1 | " | " | " |
| " | " | " | 204 | " | " | " | | | | | IN | OUT | | | " | 2D2-2Q2 | " | " | " |
| " | " | " | 205 | " | " | " | | | | | | | IN | OUT | " | 2D3-2Q3 | " | " | " |
| " | " | " | 206 | " | GND | IN | IN | OUT | | | | | | | " | 2D0-2Q0 | " | " | " |
| " | " | " | 207 | " | " | " | | | IN | OUT | | | | | " | 2D1-2Q1 | " | " | " |
| " | " | " | 208 | " | " | " | | | | | IN | OUT | | | " | 2D2-2Q2 | " | " | " |
| " | " | " | 209 | " | " | " | | | | | | | IN | OUT | " | 2D3-2Q3 | " | " | " |

TABLE III. Group A inspection for device type 03.
Terminal conditions (pins not designated may be H ≥ 2.0 V, or L ≤ 0.8 V, or open).

| Subgroup | Symbol | MIL-STD-883 method | Case J, K, L, Z | 1 | 2 | 3 | 4 | 5 | 6 | 7 | 8 | 9 | 10 | 11 | 12 | Meas. terminal | Test limits | | |
|---|---|---|---|---|---|---|---|---|---|---|---|---|---|---|---|---|---|---|---|
| | | | Test No. | 1 $\overline{MR}$ | 1 $\overline{E}$ 0 | 1 $\overline{E}$ 1 | 1D0 | 1Q0 | 1D1 | 1Q1 | 1D2 | 1Q2 | 1D3 | 1Q3 | GND | | Min | Max | Unit |
| 10 | $t_{PHL2}$ | 3003 | 210 | 5.0 V | IN | GND | IN | OUT | | | | | | | GND | 1D0-1Q0 | 3 | 37 | ns |
| $T_C$ = 125°C | " | Fig 6 | 211 | " | " | " | | | IN | OUT | | | | | " | 1D1-1Q1 | " | " | " |
| " | " | " | 212 | " | " | " | | | | | IN | OUT | | | " | 1D2-1Q2 | " | " | " |
| " | " | " | 213 | " | " | " | | | | | | | IN | OUT | " | 1D3-1Q3 | " | " | " |
| " | " | " | 214 | " | GND | IN | IN | OUT | | | | | | | " | 1D0-1Q0 | " | " | " |
| " | " | " | 215 | " | " | " | | | IN | OUT | | | | | " | 1D1-1Q1 | " | " | " |
| " | " | " | 216 | " | " | " | | | | | IN | OUT | | | " | 1D2-1Q2 | " | " | " |
| " | " | " | 217 | " | " | " | | | | | | | IN | OUT | " | 1D3-1Q3 | " | " | " |
| " | " | " | 218 | " | | | | | | | | | | | " | 2D0-2Q0 | " | " | " |
| " | " | " | 219 | " | | | | | | | | | | | " | 2D1-2Q1 | " | " | " |
| " | " | " | 220 | " | | | | | | | | | | | " | 2D2-2Q2 | " | " | " |
| " | " | " | 221 | " | | | | | | | | | | | " | 2D3-2Q3 | " | " | " |
| " | " | " | 222 | " | | | | | | | | | | | " | 2D0-2Q0 | " | " | " |
| " | " | " | 223 | " | | | | | | | | | | | " | 2D1-2Q1 | " | " | " |
| " | " | " | 224 | " | | | | | | | | | | | " | 2D2-2Q2 | " | " | " |
| " | " | " | 225 | " | | | | | | | | | | | " | 2D3-2Q3 | " | " | " |
| " | $t_{PHL3}$ | 3003 | 226 | IN | IN | GND | 5.0 V | OUT | 5.0 V | | 5.0 V | | 5.0 V | | " | 1 $\overline{MR}$ -1Q0 | " | " | " |
| " | " | Fig 6-C | 227 | " | " | " | " | | " | OUT | " | | " | | " | 1 $\overline{MR}$ -1Q1 | " | " | " |
| " | " | " | 228 | " | " | " | " | | " | | " | OUT | " | | " | 1 $\overline{MR}$ -1Q2 | " | " | " |
| " | " | " | 229 | " | " | " | " | | " | | " | | " | OUT | " | 1 $\overline{MR}$ -1Q3 | " | " | " |
| " | " | " | 230 | " | GND | IN | " | OUT | " | | " | | " | | " | 1 $\overline{MR}$ -1Q0 | " | " | " |
| " | " | " | 231 | " | " | " | " | | " | OUT | " | | " | | " | 1 $\overline{MR}$ -1Q1 | " | " | " |
| " | " | " | 232 | " | " | " | " | | " | | " | OUT | " | | " | 1 $\overline{MR}$ -1Q2 | " | " | " |
| " | " | " | 233 | " | " | " | " | | " | | " | | " | OUT | " | 1 $\overline{MR}$ -1Q3 | " | " | " |
| " | " | " | 234 | | | | | | | | | | | | " | 2 $\overline{MR}$ -2Q0 | " | " | " |
| " | " | " | 235 | | | | | | | | | | | | " | 2 $\overline{MR}$ -2Q1 | " | " | " |
| " | " | " | 236 | | | | | | | | | | | | " | 2 $\overline{MR}$ -2Q2 | " | " | " |
| " | " | " | 237 | | | | | | | | | | | | " | 2 $\overline{MR}$ -2Q3 | " | " | " |
| " | " | " | 238 | | | | | | | | | | | | " | 2 $\overline{MR}$ -2Q0 | " | " | " |
| " | " | " | 239 | | | | | | | | | | | | " | 2 $\overline{MR}$ -2Q1 | " | " | " |
| " | " | " | 240 | | | | | | | | | | | | " | 2 $\overline{MR}$ -2Q2 | " | " | " |
| " | " | " | 241 | | | | | | | | | | | | " | 2 $\overline{MR}$ -2Q3 | " | " | " |
| 11 | Same tests, terminal conditions and limits as for subgroup 10, except $T_C$ = -55°C. | | | | | | | | | | | | | | | | | | |

TABLE III. Group A inspection for device type 03.
Terminal conditions (pins not designated may be H ≥ 2.0 V, or L ≤ 0.8 V, or open).

| Subgroup | Symbol | MIL-STD-883 method | Case J, K, L, Z | 13 | 14 | 15 | 16 | 17 | 18 | 19 | 20 | 21 | 22 | 23 | 24 | Meas. terminal | Test limits | | |
|---|---|---|---|---|---|---|---|---|---|---|---|---|---|---|---|---|---|---|---|
| | | | Test No. | 2 $\overline{MR}$ | 2 $\overline{E}$ 0 | 2 $\overline{E}$ 1 | 2D0 | 2Q0 | 2D1 | 2Q1 | 2D2 | 2Q2 | 2D3 | 2Q3 | $V_{CC}$ | | Min | Max | Unit |
| 10 | $t_{PHL2}$ | 3003 | 210 | 5.0 V | | | | | | | | | | | 5.0 V | 1D0-1Q0 | 3 | 37 | ns |
| $T_C$ = 125°C | " | Fig 6 | 211 | " | | | | | | | | | | | " | 1D1-1Q1 | " | " | " |
| " | " | " | 212 | " | | | | | | | | | | | " | 1D2-1Q2 | " | " | " |
| " | " | " | 213 | " | | | | | | | | | | | " | 1D3-1Q3 | " | " | " |
| " | " | " | 214 | " | | | | | | | | | | | " | 1D0-1Q0 | " | " | " |
| " | " | " | 215 | " | | | | | | | | | | | " | 1D1-1Q1 | " | " | " |
| " | " | " | 216 | " | | | | | | | | | | | " | 1D2-1Q2 | " | " | " |
| " | " | " | 217 | " | | | | | | | | | | | " | 1D3-1Q3 | " | " | " |
| " | " | " | 218 | " | IN | GND | IN | OUT | | | | | | | " | 2D0-2Q0 | " | " | " |
| " | " | " | 219 | " | " | " | | | IN | OUT | | | | | " | 2D1-2Q1 | " | " | " |
| " | " | " | 220 | " | " | " | | | | | IN | OUT | | | " | 2D2-2Q2 | " | " | " |
| " | " | " | 221 | " | " | " | | | | | | | IN | OUT | " | 2D3-2Q3 | " | " | " |
| " | " | " | 222 | " | GND | IN | IN | OUT | | | | | | | " | 2D0-2Q0 | " | " | " |
| " | " | " | 223 | " | " | " | | | IN | OUT | | | | | " | 2D1-2Q1 | " | " | " |
| " | " | " | 224 | " | " | " | | | | | IN | OUT | | | " | 2D2-2Q2 | " | " | " |
| " | " | " | 225 | " | " | " | | | | | | | IN | OUT | " | 2D3-2Q3 | " | " | " |
| " | $t_{PHL3}$ | 3003 | 226 | | | | | | | | | | | | " | 1 $\overline{MR}$ -1Q0 | " | " | " |
| " | " | Fig 6-C | 227 | | | | | | | | | | | | " | 1 $\overline{MR}$ -1Q1 | " | " | " |
| " | " | " | 228 | | | | | | | | | | | | " | 1 $\overline{MR}$ -1Q2 | " | " | " |
| " | " | " | 229 | | | | | | | | | | | | " | 1 $\overline{MR}$ -1Q3 | " | " | " |
| " | " | " | 230 | | | | | | | | | | | | " | 1 $\overline{MR}$ -1Q0 | " | " | " |
| " | " | " | 231 | | | | | | | | | | | | " | 1 $\overline{MR}$ -1Q1 | " | " | " |
| " | " | " | 232 | | | | | | | | | | | | " | 1 $\overline{MR}$ -1Q2 | " | " | " |
| " | " | " | 233 | | | | | | | | | | | | " | 1 $\overline{MR}$ -1Q3 | " | " | " |
| " | " | " | 234 | IN | IN | GND | 5.0 V | OUT | 5.0 V | | 5.0 V | | 5.0 V | | " | 2 $\overline{MR}$ -2Q0 | " | " | " |
| " | " | " | 235 | " | " | " | " | | " | OUT | " | | " | | " | 2 $\overline{MR}$ -2Q1 | " | " | " |
| " | " | " | 236 | " | " | " | " | | " | | " | OUT | " | | " | 2 $\overline{MR}$ -2Q2 | " | " | " |
| " | " | " | 237 | " | " | " | " | | " | | " | | " | OUT | " | 2 $\overline{MR}$ -2Q3 | " | " | " |
| " | " | " | 238 | " | GND | IN | " | OUT | " | | " | | " | | " | 2 $\overline{MR}$ -2Q0 | " | " | " |
| " | " | " | 239 | " | " | " | " | | " | OUT | " | | " | | " | 2 $\overline{MR}$ -2Q1 | " | " | " |
| " | " | " | 240 | " | " | " | " | | " | | " | OUT | " | | " | 2 $\overline{MR}$ -2Q2 | " | " | " |
| " | " | " | 241 | " | " | " | " | | " | | " | | " | OUT | " | 2 $\overline{MR}$ -2Q3 | " | " | " |
| 11 | Same tests, terminal conditions and limits as for subgroup 10, except $T_C$ = -55°C. | | | | | | | | | | | | | | | | | | |

TABLE III. Group A inspection for device type 04.
Terminal conditions (pins not designated may be H ≥ 2.0 V or L ≤ 0.8 V or open).

| Subgroup | Symbol | MIL-STD-883 method | Cases E, F | 1 | 2 | 3 | 4 | 5 | 6 | 7 | 8 | 9 | 10 | 11 | 12 | 13 | 14 | 15 | 16 | Meas. terminal | Test limits | | |
|---|---|---|---|---|---|---|---|---|---|---|---|---|---|---|---|---|---|---|---|---|---|---|---|
| | | | Test No. | $\overline{E}$ | $\overline{S}$ 0 | D0 | D1 | $\overline{S}$ 2 | D2 | D3 | GND | $\overline{MR}$ | Q3 | $\overline{S}$ 3 | Q2 | Q1 | $\overline{S}$ 1 | Q0 | $V_{CC}$ | | Min | Max | Unit |
| 1 | $V_{OH}$ | 3006 | 1 | 0.8 V | 0.8 V | 2.0 V | 2.0 V | 0.8 V | 2.0 V | 2.0 V | GND | 2.0 V | | 0.8 V | | | 0.8 V | -800μA | 4.5 V | Q0 | 2.4 | | V |
| $T_C$ = 25°C | " | " | 2 | " | " | " | " | " | " | " | " | " | | " | | -800μA | " | | " | Q1 | " | | " |
| " | " | " | 3 | " | " | " | " | " | " | " | " | " | | " | -800μA | | " | | " | Q2 | " | | " |
| " | " | " | 4 | " | " | " | " | " | " | " | " | " | -800μA | " | | | " | | " | Q3 | " | | " |
| " | $V_{OL}$ | 3007 | 5 | " | " | 0.8 V | 0.8 V | " | 0.8 V | 0.8 V | " | " | | " | | | " | 16 mA | " | Q0 | | 0.4 | " |
| " | " | " | 6 | " | " | " | " | " | " | " | " | " | | " | | 16 mA | " | | " | Q1 | | " | " |
| " | " | " | 7 | " | " | " | " | " | " | " | " | " | | " | 16 mA | | " | | " | Q2 | | " | " |
| " | " | " | 8 | " | " | " | " | " | " | " | " | " | 16 mA | " | | | " | | " | Q3 | | " | " |
| " | $V_{IC}$ | | 9 | -12 mA | | | | | | | " | | | | | | | | " | $\overline{E}$ | | -1.5 | " |
| " | " | | 10 | | -12 mA | | | | | | " | | | | | | | | " | $\overline{S}$ 0 | | " | " |
| " | " | | 11 | | | -12 mA | | | | | " | | | | | | | | " | D0 | | " | " |
| " | " | | 12 | | | | -12 mA | | | | " | | | | | | | | " | D1 | | " | " |
| " | " | | 13 | | | | | -12 mA | | | " | | | | | | | | " | $\overline{S}$ 2 | | " | " |
| " | " | | 14 | | | | | | -12 mA | | " | | | | | | | | " | D2 | | " | " |
| " | " | | 15 | | | | | | | -12 mA | " | | | | | | | | " | D3 | | " | " |
| " | " | | 16 | | | | | | | | " | -12 mA | | | | | | | " | $\overline{MR}$ | | " | " |
| " | " | | 17 | | | | | | | | " | | | -12 mA | | | | | " | $\overline{S}$ 3 | | " | " |
| " | " | | 18 | | | | | | | | " | | | | | | -12 mA | | " | $\overline{S}$ 1 | | " | " |
| " | $I_{IL1}$ | 3009 | 19 | GND | GND | 0.4 V | | GND | | | " | | | GND | | | GND | | 5.5 V | D0 | -0.7 | -2.7 | mA |
| " | " | " | 20 | " | " | | 0.4 V | " | | | " | | | " | | | " | | " | D1 | " | " | " |
| " | " | " | 21 | " | " | | | " | 0.4 V | | " | | | " | | | " | | " | D2 | " | " | " |
| " | " | " | 22 | " | " | | | " | | 0.4 V | " | | | " | | | " | | " | D3 | " | " | " |
| " | $I_{IL2}$ | " | 23 | 0.4 V | | | | | | | " | | | | | | | | " | $\overline{E}$ | " | -1.6 | " |
| " | " | " | 24 | | 0.4 V | | | | | | " | | | | | | | | " | $\overline{S}$ 0 | " | " | " |
| " | " | " | 25 | | | | | 0.4 V | | | " | | | | | | | | " | $\overline{S}$ 2 | " | " | " |
| " | " | " | 26 | | | | | | | | " | 0.4 V | | | | | | | " | $\overline{MR}$ | " | " | " |
| " | " | " | 27 | | | | | | | | " | | | 0.4 V | | | | | " | $\overline{S}$ 3 | " | " | |
| " | " | " | 28 | | | | | | | | " | | | | | | 0.4 V | | " | $\overline{S}$ 1 | " | " | " |
| " | $I_{IH1}$ | 3010 | 29 | 5.5 V | 5.5 V | 2.4 V | | 5.5 V | | | " | GND | | 5.5 V | | | 5.5 V | | " | D0 | | 80 | μA |
| " | " | " | 30 | " | " | | 2.4 V | " | | | " | " | | " | | | " | | " | D1 | | " | " |
| " | " | " | 31 | " | " | | | " | 2.4 V | | " | " | | " | | | " | | " | D2 | | " | " |
| " | " | " | 32 | " | " | | | " | | 2.4 V | " | " | | " | | | " | | " | D3 | | " | " |

TABLE III. Group A inspection for device type 04.
Terminal conditions (pins not designated may be H ≥ 2.0 V or L ≤ 0.8 V or open).

| Subgroup | Symbol | MIL-STD-883 method | Cases E, F | 1 | 2 | 3 | 4 | 5 | 6 | 7 | 8 | 9 | 10 | 11 | 12 | 13 | 14 | 15 | 16 | Meas. terminal | Test limits | | |
|---|---|---|---|---|---|---|---|---|---|---|---|---|---|---|---|---|---|---|---|---|---|---|---|
| | | | Test No. | $\overline{E}$ | $\overline{S}$ 0 | D0 | D1 | $\overline{S}$ 2 | D2 | D3 | GND | $\overline{MR}$ | Q3 | $\overline{S}$ 3 | Q2 | Q1 | $\overline{S}$ 1 | Q0 | $V_{CC}$ | | Min | Max | Unit |
| 1 | $I_{IH2}$ | 3010 | 33 | 5.5 V | 5.5 V | 5.5 V | | 5.5 V | | | GND | GND | | 5.5 V | | | 5.5 V | | 5.5 V | D0 | | 200 | µA |
| $T_C$ = 25°C | " | " | 34 | " | " | | 5.5 V | " | | | " | " | | " | | | " | | " | D1 | | " | " |
| " | " | " | 35 | " | " | | | " | 5.5 V | | " | " | | " | | | " | | " | D2 | | " | " |
| " | " | " | 36 | " | " | | | " | | 5.5 V | " | " | | " | | | " | | " | D3 | | " | " |
| " | $I_{IH3}$ | 3006 | 37 | 2.4 V | | | | | | | " | | | | | | | | " | $\overline{E}$ | | 40 | " |
| " | " | " | 38 | | 2.4 V | | | | | | " | | | | | | | | " | $\overline{S}$ 0 | | " | " |
| " | " | " | 39 | | | | | 2.4 V | | | " | | | | | | | | " | $\overline{S}$ 2 | | " | " |
| " | " | " | 40 | | | | | | | | " | 2.4 V | | | | | | | " | $\overline{MR}$ | | " | " |
| " | " | " | 41 | | | | | | | | " | | | 2.4 V | | | | | " | $\overline{S}$ 3 | | " | " |
| " | " | " | 42 | | | | | | | | " | | | | | | 2.4 V | | " | $\overline{S}$ 1 | | " | " |
| " | $I_{IH4}$ | " | 43 | 5.5 V | | | | | | | " | | | | | | | | " | $\overline{E}$ | | 100 | " |
| " | " | " | 44 | | 5.5 V | | | | | | " | | | | | | | | " | $\overline{S}$ 0 | | " | " |
| " | " | " | 45 | | | | | 5.5 V | | | " | | | | | | | | " | $\overline{S}$ 2 | | " | " |
| " | " | " | 46 | | | | | | | | " | 5.5 V | | | | | | | " | $\overline{MR}$ | | " | " |
| " | " | " | 47 | | | | | | | | " | | | 5.5 V | | | | | " | $\overline{S}$ 3 | | " | " |
| " | " | " | 48 | | | | | | | | " | | | | | | 5.5 V | | " | $\overline{S}$ 1 | | " | " |
| " | $I_{OS}$ | 3011 | 49 | GND | GND | 4.5 V | | | | | " | 5.5 V | | | | | | GND | " | Q0 | -20 | -100 | mA |
| " | " | " | 50 | " | | | 4.5 V | | | | " | " | | | | GND | GND | | " | Q1 | " | " | " |
| " | " | " | 51 | " | | | | GND | 4.5 V | | " | " | | | GND | | | | " | Q2 | " | " | " |
| " | " | " | 52 | " | | | | | | 4.5 V | " | " | GND | GND | | | | | " | Q3 | " | " | " |
| " | $I_{CC}$ | 3005 | 53 | 4.5 V | GND | | | GND | | | " | GND | | GND | | | GND | | " | $V_{CC}$ | | 55 | " |
| 2 | Same tests, terminal conditions and limits as for subgroup 1, except $T_C$ = 125°C and $V_{IC}$ tests are omitted. | | | | | | | | | | | | | | | | | | | | | | |
| 3 | Same tests, terminal conditions and limits as for subgroup 1, except $T_C$ = -55°C and $V_{IC}$ tests are omitted. | | | | | | | | | | | | | | | | | | | | | | |
| 9 | $t_{PLH1}$ | 3003 | 54 | IN | GND | IN | | | | | GND | 5.0 V | | | | | | OUT | 5.0 V | $\overline{E}$ -Q0 | 9 | 30 | ns |
| $T_C$ = 25°C | " | Fig 7-A | 55 | " | | | IN | | | | " | " | | | | OUT | GND | | " | $\overline{E}$ -Q1 | " | " | " |
| " | " | " | 56 | " | | | | GND | IN | | " | " | | | OUT | | | | " | $\overline{E}$ -Q2 | " | " | " |
| " | " | " | 57 | " | | | | | | IN | " | " | OUT | GND | | | | | " | $\overline{E}$ -Q3 | " | " | " |
| " | $t_{PHL1}$ | 3003 | 58 | IN | GND | IN | | | | | " | " | | | | | | OUT | " | $\overline{E}$ -Q0 | " | 29 | ns |
| " | " | Fig 7-B | 59 | " | | | IN | | | | " | " | | | | OUT | GND | | " | $\overline{E}$ -Q1 | " | " | " |
| " | " | " | 60 | " | | | | GND | IN | | " | " | | | OUT | | | | " | $\overline{E}$ -Q2 | " | " | " |
| " | " | " | 61 | " | | | | | | IN | " | " | OUT | GND | | | | | " | $\overline{E}$ -Q3 | " | " | " |

TABLE III. Group A inspection for device type 04.
Terminal conditions (pins not designated may be H ≥ 2.0 V or L ≤ 0.8 V or open).

| Subgroup | Symbol | MIL-STD-883 method | Cases E, F | 1 | 2 | 3 | 4 | 5 | 6 | 7 | 8 | 9 | 10 | 11 | 12 | 13 | 14 | 15 | 16 | Meas. terminal | Test limits | | |
|---|---|---|---|---|---|---|---|---|---|---|---|---|---|---|---|---|---|---|---|---|---|---|---|
| | | | Test No. | $\overline{E}$ | $\overline{S}$ 0 | D0 | D1 | $\overline{S}$ 2 | D2 | D3 | GND | $\overline{MR}$ | Q3 | $\overline{S}$ 3 | Q2 | Q1 | $\overline{S}$ 1 | Q0 | $V_{CC}$ | | Min | Max | Unit |
| 9 | $t_{PHL1}$ | 3003 | 62 | IN | GND | IN | | | | | GND | 5.0 V | | | | | | OUT | 5.0 V | $\overline{E}$ -Q0 | 9 | 29 | ns |
| $T_C$ = 25°C | " | Fig 7-C | 63 | " | | | IN | | | | " | " | | | | OUT | GND | | " | $\overline{E}$ -Q1 | " | " | " |
| " | " | " | 64 | " | | | | GND | IN | | " | " | | | OUT | | | | " | $\overline{E}$ -Q2 | " | " | " |
| " | " | " | 65 | " | | | | | | IN | " | " | OUT | GND | | | | | " | $\overline{E}$ -Q3 | " | " | " |
| " | $t_{PLH2}$ | 3003 | 66 | " | GND | IN | | | | | " | " | | | | | | OUT | " | D0-Q0 | " | 21 | ns |
| " | " | Fig 7-B | 67 | " | | | IN | | | | " | " | | | | OUT | GND | | " | D1-Q1 | " | " | " |
| " | " | " | 68 | " | | | | GND | IN | | " | " | | | OUT | | | | " | D2-Q2 | " | " | " |
| " | " | " | 69 | " | | | | | | IN | " | " | OUT | GND | | | | | " | D3-Q3 | " | " | " |
| " | $t_{PLH2}$ | 3003 | 70 | " | GND | IN | | | | | " | " | | | | | | OUT | " | D0-Q0 | " | " | " |
| " | " | Fig 7-C | 71 | " | | | IN | | | | " | " | | | | OUT | GND | | " | D1-Q1 | " | " | " |
| " | " | " | 72 | " | | | | GND | IN | | " | " | | | OUT | | | | " | D2-Q2 | " | " | " |
| " | " | " | 73 | " | | | | | | IN | " | " | OUT | GND | | | | | " | D3-Q3 | " | " | " |
| " | $t_{PLH2}$ | 3003 | 74 | GND | GND | IN | | | | | " | " | | | | | | OUT | " | D0-Q0 | " | " | " |
| " | " | Fig 7-D | 75 | " | | | IN | | | | " | " | | | | OUT | GND | | " | D1-Q1 | " | " | " |
| " | " | " | 76 | " | | | | GND | IN | | " | " | | | OUT | | | | " | D2-Q2 | " | " | " |
| " | " | " | 77 | " | | | | | | IN | " | " | OUT | GND | | | | | " | D3-Q3 | " | " | " |
| " | $t_{PHL2}$ | 3003 | 78 | " | GND | IN | | | | | " | " | | | | | | OUT | " | D0-Q0 | 3 | 30 | " |
| " | " | Fig 7-E | 79 | " | | | IN | | | | " | " | | | | OUT | GND | | " | D1-Q1 | " | " | " |
| " | " | " | 80 | " | | | | GND | IN | | " | " | | | OUT | | | | " | D2-Q2 | " | " | " |
| " | " | " | 81 | " | | | | | | IN | " | " | OUT | GND | | | | | " | D3-Q3 | " | " | " |
| " | $t_{PHL2}$ | 3003 | 82 | IN | GND | IN | | | | | " | " | | | | | | OUT | " | D0-Q0 | " | " | " |
| " | " | Fig 7-A | 83 | " | | | IN | | | | " | " | | | | OUT | GND | | " | D1-Q1 | " | " | " |
| " | " | " | 84 | " | | | | GND | IN | | " | " | | | OUT | | | | " | D2-Q2 | " | " | " |
| " | " | " | 85 | " | | | | | | IN | " | " | OUT | GND | | | | | " | D3-Q3 | " | " | " |
| " | $t_{PHL3}$ | 3003 | 86 | " | GND | 5.0 V | | | | | " | IN | | | | | | OUT | " | $\overline{MR}$ -Q0 | 9 | 23 | " |
| " | " | Fig 7-F | 87 | " | | | 5.0 V | | | | " | " | | | | OUT | GND | | " | $\overline{MR}$ -Q1 | " | " | " |
| " | " | " | 88 | " | | | | GND | 5.0 V | | " | " | | | OUT | | | | " | $\overline{MR}$ -Q2 | " | " | " |
| " | " | " | 89 | " | | | | | | 5.0 V | " | " | OUT | GND | | | | | " | $\overline{MR}$ -Q3 | " | " | " |
| " | $t_{PLH4}$ | 3003 | 90 | GND | IN | IN | | | | | " | 5.0 V | | | | | | OUT | " | $\overline{S}$ 0-Q0 | " | 29 | " |
| " | " | Fig 7-E | 91 | " | | | IN | | | | " | " | | | | OUT | IN | | " | $\overline{S}$ 1-Q1 | " | " | " |
| " | " | " | 92 | " | | | | IN | IN | | " | " | | | OUT | | | | " | $\overline{S}$ 2-Q2 | " | " | " |
| " | " | " | 93 | " | | | | | | IN | " | " | OUT | IN | | | | | " | $\overline{S}$ 3-Q3 | " | " | " |

TABLE III. Group A inspection for device type 04.
Terminal conditions (pins not designated may be H ≥ 2.0 V or L ≤ 0.8 V or open).

| Subgroup | Symbol | MIL-STD-883 method | Cases E, F | 1 | 2 | 3 | 4 | 5 | 6 | 7 | 8 | 9 | 10 | 11 | 12 | 13 | 14 | 15 | 16 | Meas. terminal | Test limits | | |
|---|---|---|---|---|---|---|---|---|---|---|---|---|---|---|---|---|---|---|---|---|---|---|---|
| | | | Test No. | $\overline{E}$ | $\overline{S}$ 0 | D0 | D1 | $\overline{S}$ 2 | D2 | D3 | GND | $\overline{MR}$ | Q3 | $\overline{S}$ 3 | Q2 | Q1 | $\overline{S}$ 1 | Q0 | $V_{CC}$ | | Min | Max | Unit |
| 10 | $t_{PLH1}$ | 3003 | 94 | IN | GND | IN | | | | | GND | 5.0 V | | | | | | OUT | 5.0 V | $\overline{E}$ -Q0 | 9 | 47 | ns |
| $T_C$ = 125°C | " | Fig 7-A | 95 | " | | | IN | | | | " | " | | | | OUT | GND | | " | $\overline{E}$ -Q1 | " | " | " |
| " | " | " | 96 | " | | | | GND | IN | | " | " | | | OUT | | | | " | $\overline{E}$ -Q2 | " | " | " |
| " | " | " | 97 | " | | | | | | IN | " | " | OUT | GND | | | | | " | $\overline{E}$ -Q3 | " | " | " |
| " | $t_{PHL1}$ | 3003 | 98 | " | GND | IN | | | | | " | " | | | | | | OUT | " | $\overline{E}$ -Q0 | " | 33 | ns |
| " | " | Fig 7-B | 99 | " | | | IN | | | | " | " | | | | OUT | GND | | " | $\overline{E}$ -Q1 | " | " | " |
| " | " | " | 100 | " | | | | GND | IN | | " | " | | | OUT | | | | " | $\overline{E}$ -Q2 | " | " | " |
| " | " | " | 101 | " | | | | | | IN | " | " | OUT | GND | | | | | " | $\overline{E}$ -Q3 | " | " | " |
| " | $t_{PHL1}$ | 3003 | 102 | " | GND | IN | | | | | " | " | | | | | | OUT | " | $\overline{E}$ -Q0 | " | " | ns |
| " | " | Fig 7-C | 103 | " | | | IN | | | | " | " | | | | OUT | GND | | " | $\overline{E}$ -Q1 | " | " | " |
| " | " | " | 104 | " | | | | GND | IN | | " | " | | | OUT | | | | " | $\overline{E}$ -Q2 | " | " | " |
| " | " | " | 105 | " | | | | | | IN | " | " | OUT | GND | | | | | " | $\overline{E}$ -Q3 | " | " | " |
| " | $t_{PLH2}$ | 3003 | 106 | " | GND | IN | | | | | " | " | | | | | | OUT | " | D0-Q0 | " | 37 | ns |
| " | " | Fig 7-B | 107 | " | | | IN | | | | " | " | | | | OUT | GND | | " | D1-Q1 | " | " | " |
| " | " | " | 108 | " | | | | GND | IN | | " | " | | | OUT | | | | " | D2-Q2 | " | " | " |
| " | " | " | 109 | " | | | | | | IN | " | " | OUT | GND | | | | | " | D3-Q3 | " | " | " |
| " | $t_{PLH2}$ | 3003 | 110 | " | GND | IN | | | | | " | " | | | | | | OUT | " | D0-Q0 | " | " | " |
| " | " | Fig 7-C | 111 | " | | | IN | | | | " | " | | | | OUT | GND | | " | D1-Q1 | " | " | " |
| " | " | " | 112 | " | | | | GND | IN | | " | " | | | OUT | | | | " | D2-Q2 | " | " | " |
| " | " | " | 113 | " | | | | | | IN | " | " | OUT | GND | | | | | " | D3-Q3 | " | " | " |
| " | $t_{PLH2}$ | 3003 | 114 | GND | GND | IN | | | | | " | " | | | | | | OUT | " | D0-Q0 | " | " | " |
| " | " | Fig 7-D | 115 | " | | | IN | | | | " | " | | | | OUT | GND | | " | D1-Q1 | " | " | " |
| " | " | " | 116 | " | | | | GND | IN | | " | " | | | OUT | | | | " | D2-Q2 | " | " | " |
| " | " | " | 117 | " | | | | | | IN | " | " | OUT | GND | | | | | " | D3-Q3 | " | " | " |
| " | $t_{PHL2}$ | 3003 | 118 | " | GND | IN | | | | | " | " | | | | | | OUT | " | D0-Q0 | 3 | " | " |
| " | " | Fig 7-E | 119 | " | | | IN | | | | " | " | | | | OUT | GND | | " | D1-Q1 | " | " | " |
| " | " | " | 120 | " | | | | GND | IN | | " | " | | | OUT | | | | " | D2-Q2 | " | " | " |
| " | " | " | 121 | " | | | | | | IN | " | " | OUT | GND | | | | | " | D3-Q3 | " | " | " |
| " | $t_{PHL2}$ | 3003 | 122 | IN | GND | IN | | | | | " | " | | | | | | OUT | " | D0-Q0 | " | " | " |
| " | " | Fig 7-A | 123 | " | | | IN | | | | " | " | | | | OUT | GND | | " | D1-Q1 | " | " | " |
| " | " | " | 124 | " | | | | GND | IN | | " | " | | | OUT | | | | " | D2-Q2 | " | " | " |
| " | " | " | 125 | " | | | | | | IN | " | " | OUT | GND | | | | | " | D3-Q3 | " | " | " |

TABLE III. Group A inspection for device type 04.
Terminal conditions (pins not designated may be H ≥ 2.0 V or L ≤ 0.8 V or open).

| Subgroup | Symbol | MIL-STD-883 method | Cases E, F | 1 | 2 | 3 | 4 | 5 | 6 | 7 | 8 | 9 | 10 | 11 | 12 | 13 | 14 | 15 | 16 | Meas. terminal | Test limits | | |
|---|---|---|---|---|---|---|---|---|---|---|---|---|---|---|---|---|---|---|---|---|---|---|---|
| | | | Test No. | $\overline{E}$ | $\overline{S}$ 0 | D0 | D1 | $\overline{S}$ 2 | D2 | D3 | GND | $\overline{MR}$ | Q3 | $\overline{S}$ 3 | Q2 | Q1 | $\overline{S}$ 1 | Q0 | $V_{CC}$ | | Min | Max | Unit |
| 10 | $t_{PHL3}$ | 3003 | 126 | IN | GND | 5.0 V | | | | | GND | IN | | | | | | OUT | 5.0 V | $\overline{MR}$ -Q0 | 9 | 30 | ns |
| $T_C$ = 125°C | " | Fig 7-F | 127 | " | | | 5.0 V | | | | " | " | | | | OUT | GND | | " | $\overline{MR}$ -Q1 | " | " | " |
| " | " | " | 128 | " | | | | GND | 5.0 V | | " | " | | | OUT | | | | " | $\overline{MR}$ -Q2 | " | " | " |
| " | " | " | 129 | " | | | | | | 5.0 V | " | " | OUT | GND | | | | | " | $\overline{MR}$ -Q3 | " | " | " |
| " | $t_{PLH4}$ | 3003 | 130 | GND | IN | IN | | | | | " | 5.0 V | | | | | | OUT | " | $\overline{S}$ 0-Q0 | " | 47 | " |
| " | " | Fig 7-E | 131 | " | | | IN | | | | " | " | | | | OUT | IN | | " | $\overline{S}$ 1-Q1 | " | " | " |
| " | " | " | 132 | " | | | | IN | IN | | " | " | | | OUT | | | | " | $\overline{S}$ 2-Q2 | " | " | " |
| " | " | " | 133 | " | | | | | | IN | " | " | OUT | IN | | | | | " | $\overline{S}$ 3-Q3 | " | " | " |
| 11 | Same tests, terminal conditions and limits as subgroup 10, except $T_C$ = -55°C. | | | | | | | | | | | | | | | | | | | | | | |

## 5. PACKAGING

5.1 Packaging requirements. For acquisition purposes, the packaging requirements shall be as specified in the contract or order (see 6.2). When packaging of materiel is to be performed by DoD or in-house contractor personnel, these personnel need to contact the responsible packaging activity to ascertain packaging requirements. Packaging requirements are maintained by the Inventory Control Point's packaging activity within the Military Service or Defense Agency, or within the military service's system command. Packaging data retrieval is available from the managing Military Department's or Defense Agency's automated packaging files, CD-ROM products, or by contacting the responsible packaging activity.

## 6. NOTES

(This section contains information of a general or explanatory nature that may be helpful, but it is not mandatory)

6.1 Intended use. Microcircuits conforming to this specification are intended for logistic support of existing equipment.

6.2 Acquisition requirements. Acquisition documents should specify the following:

a. Title, number, and date of the specification.
b. PIN and compliance identifier, if applicable (see 1.2).
c. Requirements for delivery of one copy of the conformance inspection data pertinent to the device inspection lot to be supplied with each shipment by the device manufacturer, if applicable.
d. Requirement for certificate of compliance, if applicable.
e. Requirements for notification of change of product or process to acquiring activity in addition to notification to the qualifying activity, if applicable.
f. Requirements for failure analysis (including required test condition of method 5003), corrective action and reporting of results, if applicable.
g. Requirements for product assurance options.
h. Requirements for carriers, special lead lengths or lead forming, if applicable. These requirements shall not affect the part number. Unless otherwise specified, these requirements will not apply to direct purchase by or direct shipment to the Government.
i. Requirements for "JAN" marking.
j. Packaging requirements (see 5.1).

6.3 Qualification. With respect to products requiring qualification, awards will be made only for products which are, at the time of award of contract, qualified for inclusion in Qualified Manufacturers List QML-38535 whether or not such products have actually been so listed by that date. The attention of the contractors is called to these requirements, and manufacturers are urged to arrange to have the products that they propose to offer to the Federal Government tested for qualification in order that they may be eligible to be awarded contracts or purchase orders for the products covered by this specification. Information pertaining to qualification of products may be obtained from DSCC-VQ, 3990 E. Broad Street, Columbus, Ohio 43123-1199.

6.4 Superseding information. The requirements of MIL-M-38510 have been superseded to take advantage of the available Qualified Manufacturer Listing (QML) system provided by MIL-PRF-38535. Previous references to MIL-M-38510 in this document have been replaced by appropriate references to MIL-PRF-38535. All technical requirements now consist of this specification and MIL-PRF-38535. The MIL-M-38510 specification sheet number and PIN have been retained to avoid adversely impacting existing government logistics systems and contractor's parts lists.

6.5 Abbreviations, symbols and definitions. The abbreviations, symbols, and definitions used herein are defined in MIL-PRF-38535 and MIL-HDBK-1331, and as follows:

GND ..... Electrical ground (common terminal)
$V_{IN}$ ..... Voltage level at an input terminal

6.6 Logistic support. Lead materials and finishes (see 3.3) are interchangeable. Unless otherwise specified, microcircuits acquired for Government logistic support will be acquired to device class B (see 1.2.2), lead material and finish A (see 3.4). Longer lead lengths and lead forming shall not affect the part number.

6.7 Substitutability. The cross-reference information below is presented for the convenience of users. Microcircuits covered by this specification will functionally replace the listed generic-industry type. Generic-industry microcircuit types may not have equivalent operational performance characteristics across military temperature ranges or reliability factors equivalent to MIL-M-35810 device types and may have slight physical variations in relation to case size. The presence of this information should not be deemed as permitting substitution of generic-industry types for MIL-M-38510 types or as a waiver of any of the provisions of MIL-PRF-38535.

| Device type | Commercial type |
|---|---|
| 01 | 5475, 7475 (circuit A) |
| 01 | SN5475, SN7475 (circuit B) |
| 02 | 5477, 7477 (circuit A) |
| 02 | SN5477, SN7477 (circuit B) |
| 03 | 9308 (circuit A) |
| 03 | 54116, 74116 and SN74116 (circuit B) |
| 03 | S54116 (circuit C) |
| 04 | 9314 (circuit A) |
| 04 | AM9314 (circuit B) |

6.8 Changes from previous issue. Marginal notations are not used in this revision to identify changes with respect to the previous issue due to the extensiveness of the changes.

Custodians:
Army - CR
Navy - EC
Air Force - 11
DLA - CC

Preparing activity:
DLA - CC

(Project 5962-2104)

Review activities:
Army - MI, SM
Navy - AS, CG, MC, SH, TD
Air Force - 03, 19, 99

NOTE: The activities listed above were interested in this document as of the date of this document. Since organizations and responsibilities can change, you should verify the currency of the information above using the ASSIST Online database at http://assist.daps.dla.mil.