INCH-POUND

MIL-M-38510/14E
21 March 2005
SUPERSEDING
MIL-M-38510/14D
2 August 1982

MILITARY SPECIFICATION

MICROCIRCUITS, DIGITAL, TTL, DATA SELECTORS/MULTIPLEXERS, MONOLITHIC SILICON

Inactive for new design after 7 September 1995.

This specification is approved for use by all Departments and Agencies of the Department of Defense.

The requirements for acquiring the product herein shall consist of this specification sheet and MIL-PRF 38535

1. SCOPE

1.1 Scope. This specification covers the detail requirements for monolithic, silicon, TTL, data selectors/multiplexers, logic microcircuits. Two product assurance classes and a choice of case outlines and lead finishes are provided and are reflected in the complete part number. For this product, the requirements of MIL-M-38510 have been superseded by MIL-PRF-38535, (see 6.4).

1.2 Part or Identifying Number (PIN). The PIN is in accordance with MIL-PRF-38535, and as specified herein.

1.2.1 Device types. The device types are as follows:

Device type	Circuit
01	Sixteen-input data selector/multiplexer, with enable
02, 06	Eight-input data selector/multiplexer, with enable
03	Dual, four-input data selector/multiplexer, with enable
04	Dual, four-input data selector/multiplexer, without enable
05	Quad, two-input data selector/multiplexer, with enable

1.2.2 Device class. The device class is the product assurance level as defined in MIL-PRF-38535.

1.2.3 Case outlines. The case outlines are as designated in MIL-STD-1835 and as follows:

Outline letter	Descriptive designator	Terminals	Package style
E	GDIP1-T16 or CDIP2-T16	16	Dual-in-line
F	GDFP2-F16 or CDFP3-F16	16	Flat-pack
J	GDIP1-T24 or CDIP2-T24	24	Dual-in-line
K	GDFP2-F24 or CDFP3-F24	24	Flat-pack
Z	GDFP7-F24 or CDFP8-F24	24	Flat-pack

Comments, suggestions, or questions on this document should be addressed to: Commander, Defense Supply Center Columbus, ATTN: DSCC-VAS, P. O. Box 3990, Columbus, OH 43218-3990, or emailed to bipolar@dscc.dla.mil. Since contact information can change, you may want to verify the currency of this address information using the ASSIST Online database at http://assist.daps.dla.mil.

AMSC N/A FSC 5962

1.3 Absolute maximum ratings.

Supply voltage range ..... -0.5 V to +7.0 V
Input voltage range ..... -1.5 V at -12 mA to +5.5 V
Storage temperature range ..... -65°C to +150°C
Maximum power dissipation per gate, (P_D) 1/
Device type 01 ..... 375 mW
Device types 02 and 06 ..... 268 mW
Device type 03 ..... 286 mW
Device type 04 ..... 248 mW
Device type 05 ..... 275 mW
Lead temperature (soldering 10 seconds) ..... 300°C
Thermal resistance, junction-to-case (θ_{JC})..... (See MIL-STD-1835)
Junction temperature (T_J) 2/..... 175°C

1.4 Recommended operating conditions.

Supply voltage (V_{CC}) ..... 4.5 V minimum to 5.5 V maximum
Minimum high level input voltage (V_{IH}) ..... 2.0 V dc
Maximum low level input voltage (V_{IL}) ..... 0.8 V dc
Maximum low level output current (I_{IL}) ..... 16 mA
Normalized fanout (each output) 3/
Low logic level ..... 10 maximum
High logic level ..... 20 maximum
Case operating temperature range (T_C) ..... -55°C to 125°C

2.0 APPLICABLE DOCUMENT

2.1 General. The documents listed in this section are specified in sections 3, 4, or 5 of this specification. This section does not include documents cited in other sections of this specification or recommended for additional information or as examples. While every effort has been made to ensure the completeness of this list, document users are cautioned that they must meet all specified requirements of documents cited in sections 3, 4, or 5 of this specification, whether or not they are listed.

2.2 Government documents.

2.2.1 Specifications and standards. The following specifications and standards form a part of this specification to the extent specified herein. Unless otherwise specified, the issues of these documents are those cited in the solicitation or contract.

DEPARTMENT OF DEFENSE SPECIFICATIONS

MIL-PRF-38535 - Integrated Circuits (Microcircuits) Manufacturing, General Specification for.

DEPARTMENT OF DEFENSE STANDARDS

MIL-STD-883 - Test Method Standard for Microelectronics.
MIL-STD-1835 - Interface Standard Electronic Component Case Outlines

(Copies of these documents are available online at http://assist.daps.dla.mil/quicksearch/ or http://assist.daps.dla.mil or from the Standardization Document Order Desk, 700 Robbins Avenue, Building 4D, Philadelphia, PA 19111-5094.)

1/ Must withstand the added P_D due to short circuit condition (e.g. I_{OS} test).
2/ Maximum junction temperature should not be exceeded except in accordance with allowable short duration burn-in screening condition in accordance with MIL-PRF-38535.
3/ Device will fanout in both high and low levels to the specified number of inputs of the same device type as that being tested.

2.3 Order of precedence. In the event of a conflict between the text of this specification and the references cited herein, the text of this document takes precedence. Nothing in this document, however, supersedes applicable laws and regulations unless a specific exemption has been obtained.

3. REQUIREMENTS

3.1 Qualification. Microcircuits furnished under this specification shall be products that are manufactured by a manufacturer authorized by the qualifying activity for listing on the applicable qualified manufacturers list before contract award (see 4.3 and 6.3).

3.2 Item requirements. The individual item requirements shall be in accordance with MIL-PRF-38535 and as specified herein or as modified in the device manufacturer's Quality Management (QM) plan. The modification in the QM plan shall not affect the form, fit, or function as described herein.

3.3 Design, construction, and physical dimensions. The design, construction, and physical dimensions shall be as specified in MIL-PRF-38535 and herein.

3.3.1 Logic diagrams and terminal connections. The logic diagrams and terminal connections shall be as specified on figure 1 and 2.

3.3.2 Truth tables. The truth tables shall be as specified on figure 3.

3.3.4 Schematic circuit. The schematic circuit shall be maintained by the manufacturer and made available to the qualifying activity and the preparing activity upon request.

3.3.5 Case outlines. Case outlines shall be as specified in 1.2.3.

3.4 Lead material and finish. Lead material and finish shall be in accordance with MIL-PRF-38535 (see 6.6).

3.5 Electrical performance characteristics. The electrical performance characteristics are as specified in table 1 and apply over the full recommended case operating temperature range, unless otherwise specified.

3.6 Electrical test requirements. The electrical test requirements for each device class shall be the subgroups specified in table II. The electrical tests for each subgroup are described in table III.

3.7 Marking. Marking shall be in accordance with MIL-PRF-38535.

3.8 Microcircuit group assignment. The devices covered by this specification shall be in microcircuit group number 4 (see MIL-PRF-38535, appendix A).

TABLE I. Electrical performance characteristics.

Test	Symbol	Conditions $-55°C \le T_C \le +125°C$ unless otherwise specified	Device type	Limits		Unit
				Min	Max	
High level output voltage	V_{OH}	V_{CC} = 4.5 V I_{OH} = -.8 mA	All	2.4		V
Low level output voltage	V_{OL}	V_{CC} = 4.5 V I_{OL} = 16 mA	All		0.4	V
Input clamp voltage	V_{IC}	V_{CC} = 4.5 V I_{IN} = -12 mA	All		-1.5	V
Low level input current	I_{IL}	V_{CC} = 5.5 V V_{IN} = 0.4 V	02, 03, 04 05, 06	-0.7	-1.6	mA
			01	-0.6	-1.6	
High-level input current	I_{IH1}	V_{CC} = 5.5 V V_{IN} = 2.5 V	All		40	µA
High-level input current	I_{IH2}	$V_{CC} = V_{IN}$ = 5.5 V	All		100	µA
Short circuit output current	I_{OS}	V_{CC} = 5.5 V V_{OUT} = 0 V 1/	01, 03, 06	-20	-55	mA
			02, 04, 05	-20	-120	mA
Supply current	I_{CC}	V_{CC} = 5.5 V	01		68	mA
			02,06		48	mA
			04		45	mA
			03		52	mA
			05		50	mA
Propagation delay time high-to-low level output from A, B, C or D to W	t_{PHL1}	R_L = 390Ω ±5%, C_L = 50 pF minimum (figure 4)	01	8	40	ns
Propagation delay time low-to-high level output from A, B, C or D to W	t_{PLH1}		01	8	43	ns
Propagation delay time high-to-low level output from strobe to W	t_{PHL2}		01	6	37	ns
Propagation delay time low-to-high level output from strobe to W	t_{PLH2}		01	6	32	ns
Propagation delay time high-to-low level output from E_0–E_{15} to W	t_{PHL3}		01	3	23	ns
Propagation delay time low-to-high level output from E_0–E_{15} to W	t_{PLH3}		01	3	30	ns

1/ Not more than one should be shorted at one time.

TABLE I. Electrical performance characteristics - Continued.

Test	Symbol	Conditions $-55°C \leq T_C \leq +125°C$ unless otherwise specified	Device type	Limits Min	Limits Max	Unit
Propagation delay time, high-to-low level output from A, B, or C to W	t_{PHL1}	R_L = 390Ω ±5%, C_L = 50 pF minimum (figure 4)	02	6	40	ns
			06	6	48	
Propagation delay time, low-to-high level output from A, B, or C to W	t_{PLH1}		02	6	38	ns
			06	6	43	
Propagation delay time, high-to-low level output from A, B, or C to Y	t_{PHL2}		02	8	49	ns
			06	8	60	
Propagation delay time, low-to-high level output from A, B, or C to Y	t_{PLH2}		02	8	45	ns
			06	8	58	
Propagation delay time, high-to-low level output from strobe to W	t_{PHL3}		02	6	37	ns
			06	6	38	
Propagation delay time, low-to-high level output from strobe to W	t_{PLH3}		02, 06	6	35	ns
Propagation delay time, high-to-low level output from strobe to Y	t_{PHL4}		02	8	46	ns
			06	8	52	
Propagation delay time, low-to-high level output from strobe to Y	t_{PLH4}		02	8	42	ns
			06	8	52	
Propagation delay time, high-to-low level output from D_0-D_7 to W	t_{PHL5}		02, 06	3	32	ns
Propagation delay time, low-to-high level output from D_0-D_7 to W	t_{PLH5}		02, 06	3	26	ns
Propagation delay time, high-to-low level output from D_0-D_7 to Y	t_{PHL6}		02	6	41	ns
			06	6	44	
Propagation delay time, low-to-high level output from D_0-D_7 to Y	t_{PLH6}		02	6	33	ns
			06	6	36	
Propagation delay time, high-to-low level output from data to Y	t_{PHL1}	R_L = 390Ω ±5%, C_L = 50 pF minimum (figure 5)	03	3	29	ns
Propagation delay time, low-to-high level output from data to Y	t_{PLH1}		03	3	28	ns
Propagation delay time, high-to-low level output from A or B to Y	t_{PHL2}		03	6	44	ns
Propagation delay time, low-to-high level output from A or B to Y	t_{PLH2}		03	6	42	ns
Propagation delay time, high-to-low level output from strobe to Y	t_{PHL3}		03	6	32	ns
Propagation delay time, low-to-high level output from strobe to Y	t_{PLH3}		03	6	42	ns

TABLE I. Electrical performance characteristics - Continued.

Test	Symbol	Conditions $-55°C \leq T_C \leq +125°C$ unless otherwise specified	Device type	Limits		Unit
				Min	Max	
Propagation delay time high-to-low level output from data to Y	t_{PHL1}	R_L = 390Ω ±5%, C_L = 50 pF minimum (figure 5)	04	3	41	ns
Propagation delay time low-to-high level output from data to Y	t_{PLH1}		04	3	39	ns
Propagation delay time high-to-low level output from data to W	t_{PHL2}		04	3	25	ns
Propagation delay time low-to-high level output from data to W	t_{PLH2}		04	3	24	ns
Propagation delay time high-to-low level output from A or B to Y	t_{PHL3}		04	6	51	ns
Propagation delay time low-to-high level output from A or B to Y	t_{PLH3}		04	6	51	ns
Propagation delay time high-to-low level output from A or B to W	t_{PHL4}		04	6	39	ns
Propagation delay time low-to-high level output from A or B to W	t_{PLH4}		04	6	34	ns
Propagation delay time high-to-low level output from A to Y	t_{PHL1}	R_L = 390Ω ±5%, C_L = 50 pF minimum (figure 6)	05	6	49	ns
Propagation delay time low-to-high level output from A to Y	t_{PLH1}		05	6	41	ns
Propagation delay time high-to-low level output from strobe to Y	t_{PHL2}		05	3	39	ns
Propagation delay time low-to-high level output from strobe to Y	t_{PLH2}		05	3	33	ns
Propagation delay time high-to-low level output from data to Y	t_{PHL3}		05	3	25	ns
Propagation delay time low-to-high level output from data to Y	t_{PLH3}		05	3	35	ns

TABLE II. Electrical test requirements.

MIL-PRF-38535 Test requirement	Subgroups (see table III)	
	Class S Devices	Class B Devices
Interim electrical parameters	1	1
Final electrical test parameters	1*, 2, 3, 7, 9, 10, 11	1*, 2, 3, 7, 9
Group A test requirements	1, 2, 3, 7, 8, 9, 10, 11	1, 2, 3, 7, 8 9, 10, 11
Group B electrical test parameters when using the method 5005 QCI option	1, 2, 3	N/A
Groups C end point electrical parameters	1, 2, 3	1, 2, 3
Group D end point electrical parameters	1, 2, 3	1, 2, 3

*PDA applies to subgroup 1.

4. VERIFICATION

4.1 Sampling and inspection. Sampling and inspection procedures shall be in accordance with MIL-PRF-38535 or as modified in the device manufacturer's Quality Management (QM) plan. The modification in the QM plan shall not effect the form, fit, or function as described herein.

4.2 Screening. Screening shall be in accordance with MIL-PRF-38535 and shall be conducted on all devices prior to qualification and conformance inspection. The following additional criteria shall apply:

a. The burn-in test duration, test condition, and test temperature, or approved alternatives shall be as specified in the device manufacturer's QM plan in accordance with MIL-PRF-38535. The burn-in test circuit shall be maintained under document control by the device manufacturer's Technology Review Board (TRB) in accordance with MIL-PRF-38535 and shall be made available to the acquiring or preparing activity upon request. The test circuit shall specify the inputs, outputs, biases, and power dissipation, as applicable, in accordance with the intent specified in test method 1015 of MIL-STD-883.

b. Interim and final electrical test parameters shall be as specified in table II, except interim electrical parameters test prior to burn-in is optional at the discretion of the manufacturer.

c. Additional screening for space level product shall be as specified in MIL-PRF-38535.

4.3 Qualification inspection. Qualification inspection shall be in accordance with MIL-PRF-38535.

4.4 Technology Conformance Inspection (TCI). Technology conformance inspection shall be in accordance with MIL-PRF-38535 and herein for groups A, B, C, and D inspections (see 4.4.1 through 4.4.4).

4.4.1 Group A inspection. Group A inspection shall be in accordance with table III of MIL-PRF-38535 and as follows:

a. Tests shall be as specified in table II herein.

b. Subgroups 4, 5, and 6, shall be omitted.

4.4.2 Group B inspection. Group B inspection shall be in accordance with table II of MIL-PRF-38535.

4.4.3 Group C inspection. Group C inspection shall be in accordance with table IV of MIL-PRF-38535 and as follows:

a. End point electrical parameters shall be as specified in table II herein.

b. The steady-state life test duration, test condition, and test temperature, or approved alternatives shall be as specified in the device manufacturer's QM plan in accordance with MIL-PRF-38535. The burn-in test circuit shall be maintained under document control by the device manufacturer's Technology Review Board (TRB) in accordance with MIL-PRF-38535 and shall be made available to the acquiring or preparing activity upon request. The test circuit shall specify the inputs, outputs, biases, and power dissipation, as applicable, in accordance with the intent specified in test method 1005 of MIL-STD-883.

4.4.4 Group D inspection. Group D inspection shall be in accordance with table V of MIL-PRF-38535. End-point electrical parameters shall be as specified in table II herein.

4.5 Methods of inspection. Methods of inspection shall be as specified in the appropriate tables and as follows:

4.5.1 Voltage and current. All voltages given are referenced to the microcircuit ground terminal. Currents given are conventional current and positive when flowing into the referenced terminal.

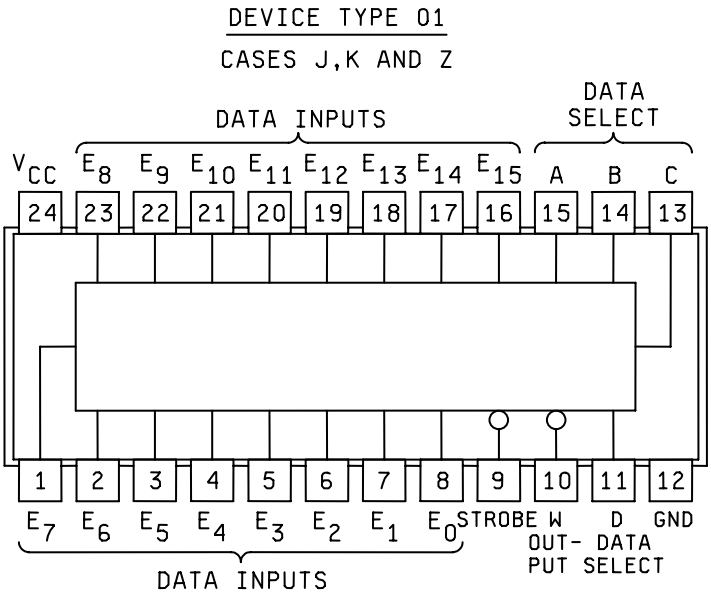

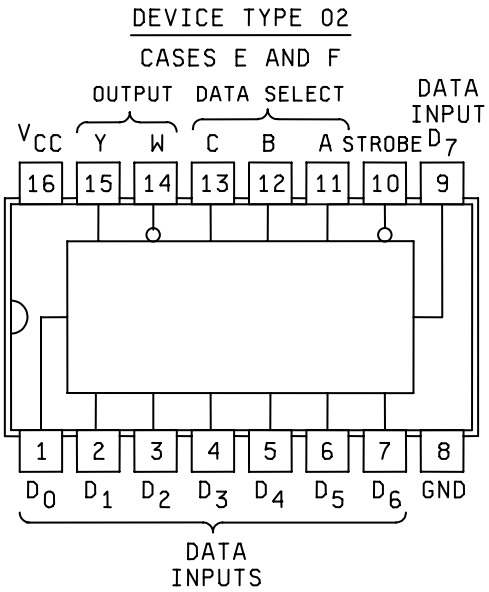

Figure 1. Terminal connections (top view).

DEVICE TYPE 03

CASES E AND F

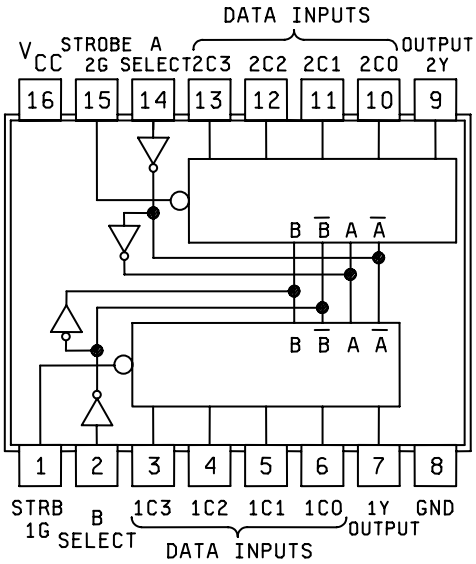

DEVICE TYPE 04

CASES E AND F

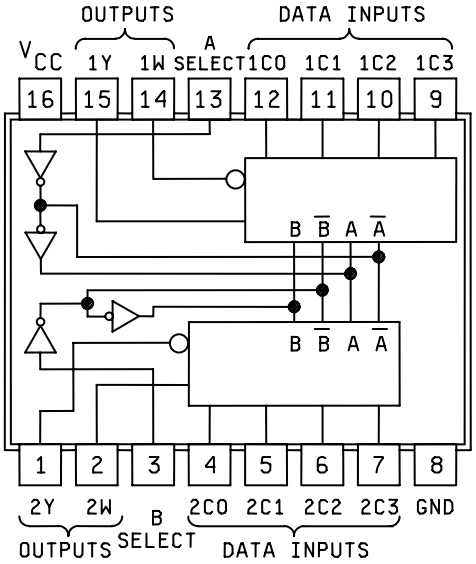

Figure 1. Terminal connections (top view) - Continued.

DEVICE TYPE 05

CASES E AND F

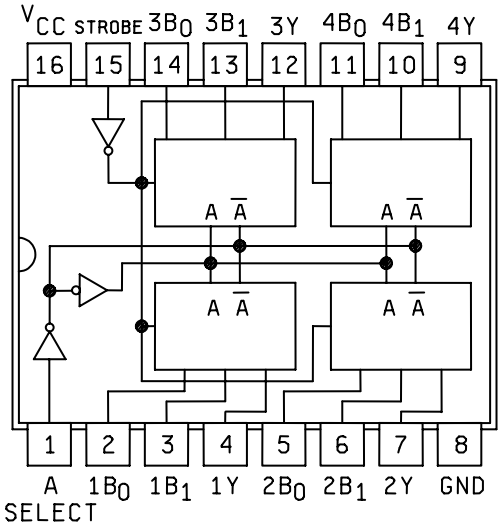

DEVICE TYPE 06

CASES E AND F

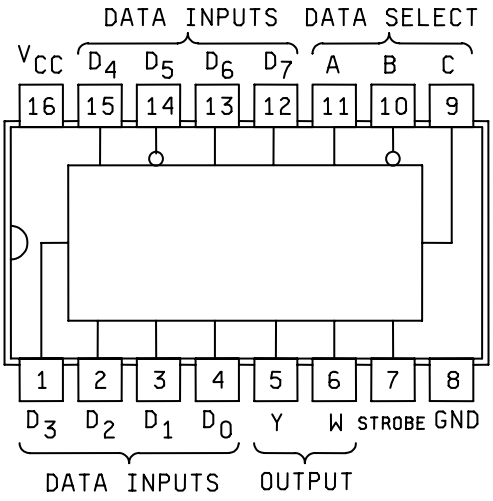

Figure 1. Terminal connections (top view) - Continued.

DEVICE TYPE 01

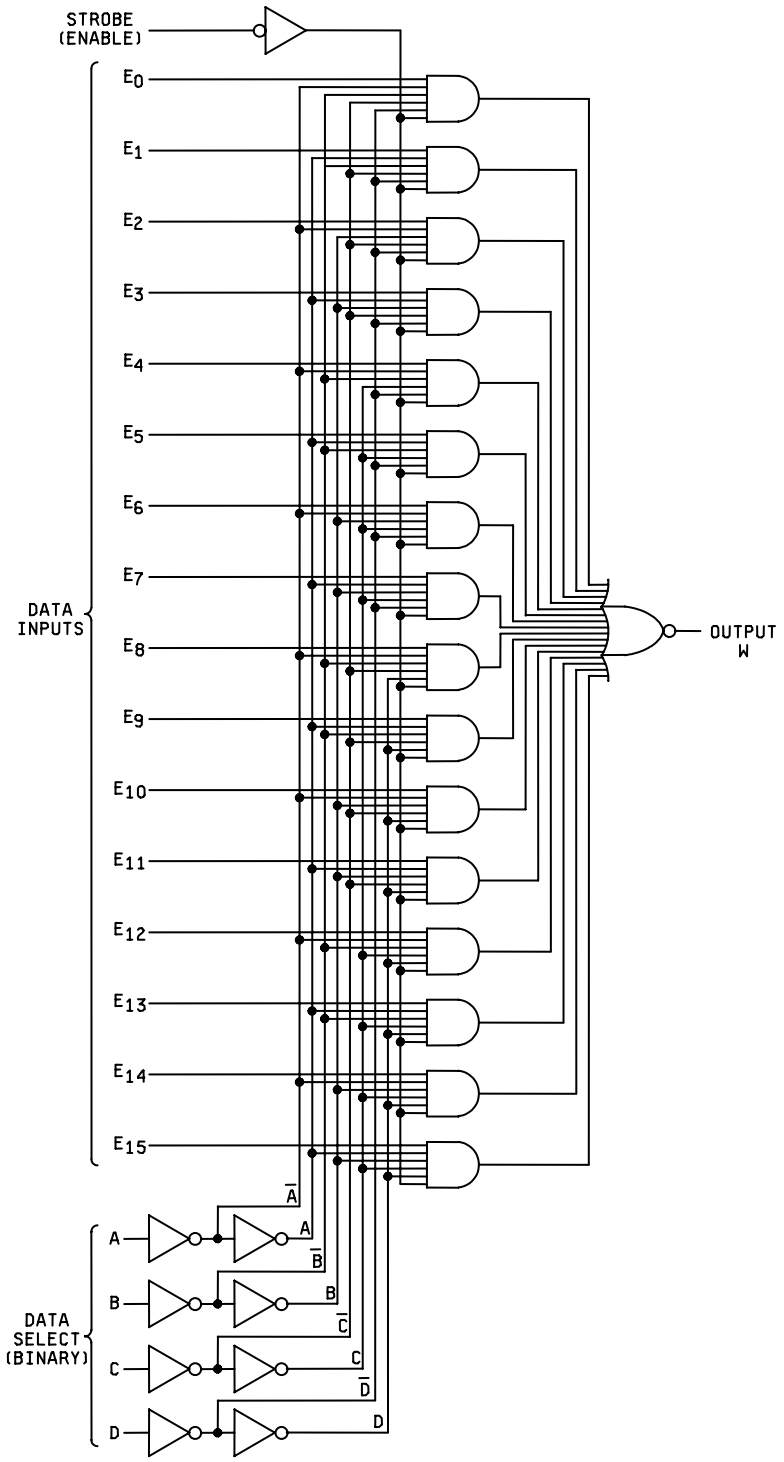

Figure 2. Logic diagrams.

DEVICE TYPES 02 AND 06

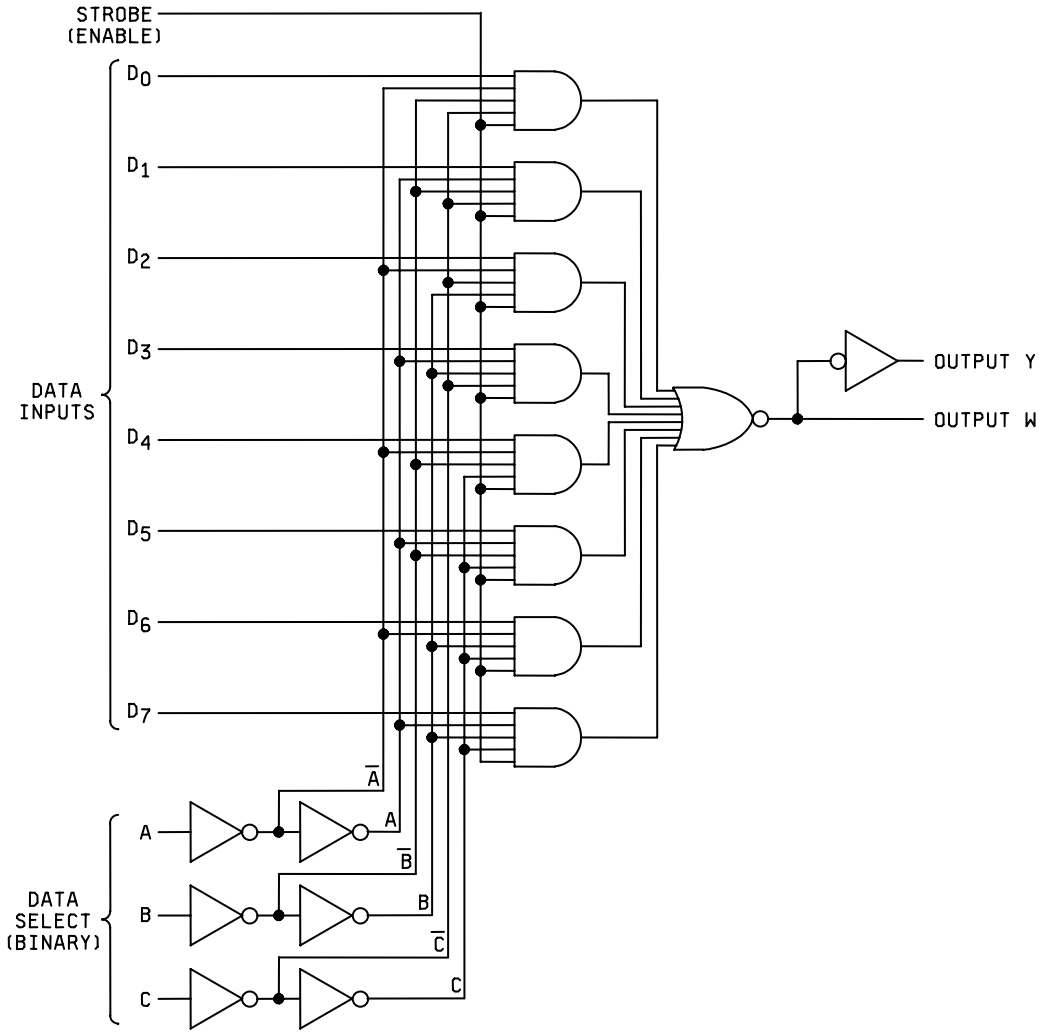

Figure 2. Logic diagrams – Continued.

DEVICE TYPE 03

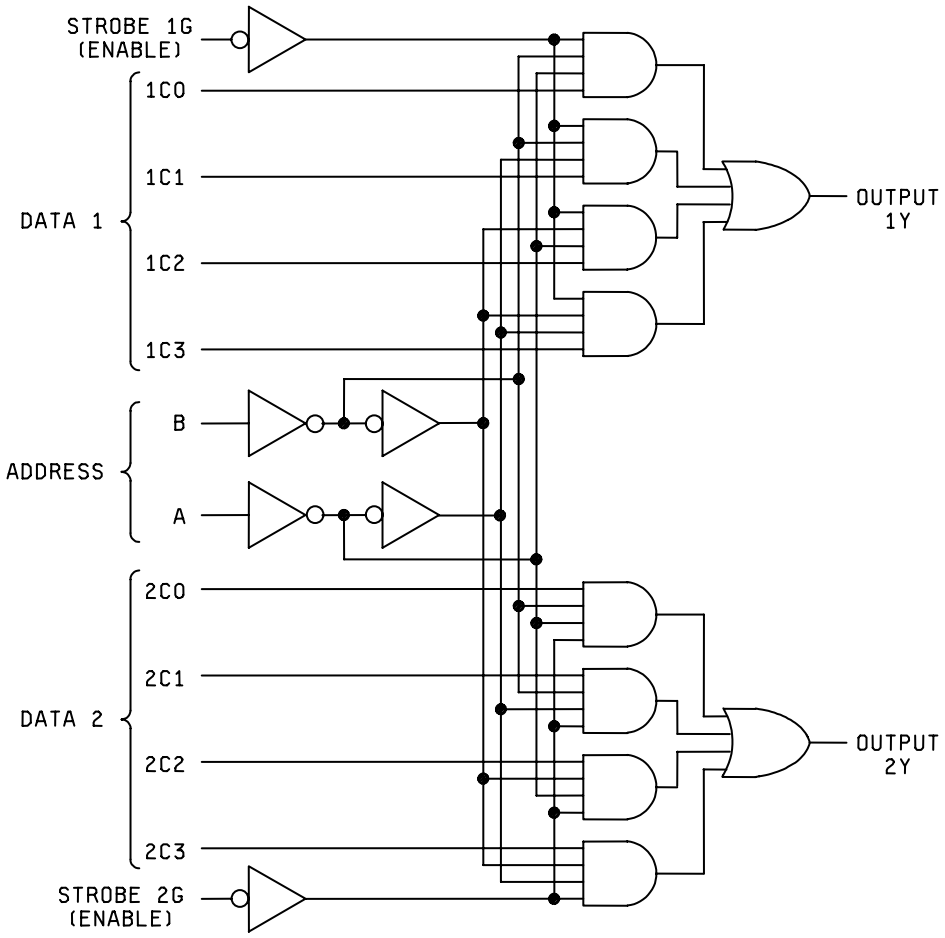

Figure 2. Logic diagrams – Continued.

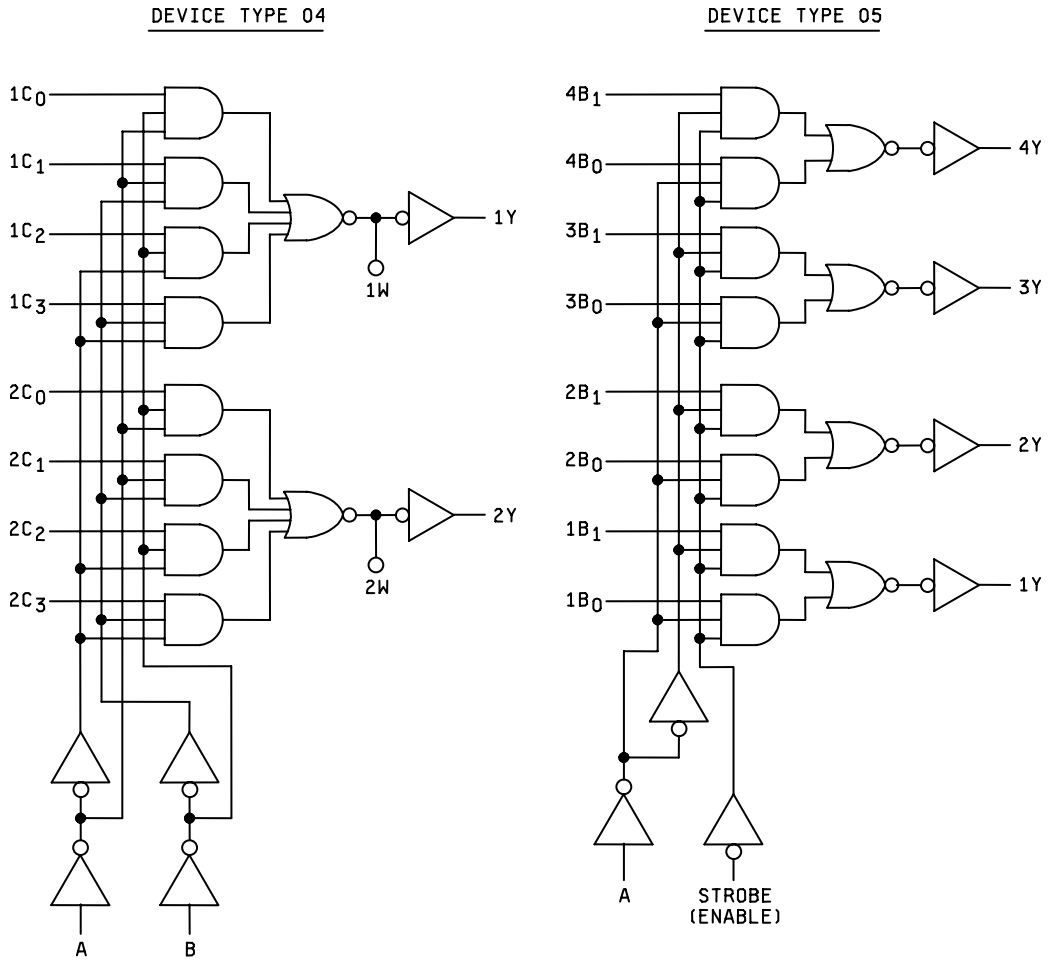

Figure 2. Logic diagrams – Continued.

Device type 01

INPUTS																					OUTPUT
D	C	B	A	STROBE	E_0	E_1	E_2	E_3	E_4	E_5	E_6	E_7	E_8	E_9	E_{10}	E_{11}	E_{12}	E_{13}	E_{14}	E_{15}	W
X	X	X	X	H	x	x	x	x	x	x	x	x	x	x	x	x	x	x	x	x	H
L	L	L	L	L	L	x	x	x	x	x	x	x	x	x	x	x	x	x	x	x	H
L	L	L	L	L	H	x	x	x	x	x	x	x	x	x	x	x	x	x	x	x	L
L	L	L	H	L	x	L	x	x	x	x	x	x	x	x	x	x	x	x	x	x	H
L	L	L	H	L	x	H	x	x	x	x	x	x	x	x	x	x	x	x	x	x	L
L	L	H	L	L	x	x	L	x	x	x	x	x	x	x	x	x	x	x	x	x	H
L	L	H	L	L	x	x	H	x	x	x	x	x	x	x	x	x	x	x	x	x	L
L	L	H	H	L	x	x	x	L	x	x	x	x	x	x	x	x	x	x	x	x	H
L	L	H	H	L	x	x	x	H	x	x	x	x	x	x	x	x	x	x	x	x	L
L	H	L	L	L	x	x	x	x	L	x	x	x	x	x	x	x	x	x	x	x	H
L	H	L	L	L	x	x	x	x	H	x	x	x	x	x	x	x	x	x	x	x	L
L	H	L	H	L	x	x	x	x	x	L	x	x	x	x	x	x	x	x	x	x	H
L	H	L	H	L	x	x	x	x	x	H	x	x	x	x	x	x	x	x	x	x	L
L	H	H	L	L	x	x	x	x	x	x	L	x	x	x	x	x	x	x	x	x	H
L	H	H	L	L	x	x	x	x	x	x	H	x	x	x	x	x	x	x	x	x	L
L	H	H	H	L	x	x	x	x	x	x	x	L	x	x	x	x	x	x	x	x	H
L	H	H	H	L	x	x	x	x	x	x	x	H	x	x	x	x	x	x	x	x	L
H	L	L	L	L	x	x	x	x	x	x	x	x	L	x	x	x	x	x	x	x	H
H	L	L	L	L	x	x	x	x	x	x	x	x	H	x	x	x	x	x	x	x	L
H	L	L	H	L	x	x	x	x	x	x	x	x	x	L	x	x	x	x	x	x	H
H	L	L	H	L	x	x	x	x	x	x	x	x	x	H	x	x	x	x	x	x	L
H	L	H	L	L	x	x	x	x	x	x	x	x	x	x	L	x	x	x	x	x	H
H	L	H	L	L	x	x	x	x	x	x	x	x	x	x	H	x	x	x	x	x	L
H	L	H	H	L	x	x	x	x	x	x	x	x	x	x	x	L	x	x	x	x	H
H	L	H	H	L	x	x	x	x	x	x	x	x	x	x	x	H	x	x	x	x	L
H	H	L	L	L	x	x	x	x	x	x	x	x	x	x	x	x	L	x	x	x	H
H	H	L	L	L	x	x	x	x	x	x	x	x	x	x	x	x	H	x	x	x	L
H	H	L	H	L	x	x	x	x	x	x	x	x	x	x	x	x	x	L	x	x	H
H	H	L	H	L	x	x	x	x	x	x	x	x	x	x	x	x	x	H	x	x	L
H	H	H	L	L	x	x	x	x	x	x	x	x	x	x	x	x	x	x	L	x	H
H	H	H	L	L	x	x	x	x	x	x	x	x	x	x	x	x	x	x	H	x	L
H	H	H	H	L	x	x	x	x	x	x	x	x	x	x	x	x	x	x	x	L	H
H	H	H	H	L	x	x	x	x	x	x	x	x	x	x	x	x	x	x	x	H	L

When used to indicate an input condition, X = High logic level or low logic level.

Figure 3. Truth tables.

Device types 02 and 06

INPUTS												OUTPUTS	
C	B	A	STROBE	D_0	D_1	D_2	D_3	D_4	D_5	D_6	D_7	Y	W
X	X	X	H	x	x	x	x	x	x	x	x	L	H
L	L	L	L	L	x	x	x	x	x	x	x	L	H
L	L	L	L	H	x	x	x	x	x	x	x	H	L
L	L	H	L	x	L	x	x	x	x	x	x	L	H
L	L	H	L	x	H	x	x	x	x	x	x	H	L
L	H	L	L	x	x	L	x	x	x	x	x	L	H
L	H	L	L	x	x	H	x	x	x	x	x	H	L
L	H	H	L	x	x	x	L	x	x	x	x	L	H
L	H	H	L	x	x	x	H	x	x	x	x	H	L
H	L	L	L	x	x	x	x	L	x	x	x	L	H
H	L	L	L	x	x	x	x	H	x	x	x	H	L
H	L	H	L	x	x	x	x	x	L	x	x	L	H
H	L	H	L	x	x	x	x	x	H	x	x	H	L
H	H	L	L	x	x	x	x	x	x	L	x	L	H
H	H	L	L	x	x	x	x	x	x	H	x	H	L
H	H	H	L	x	x	x	x	x	x	x	L	L	H
H	H	H	L	x	x	x	x	x	x	x	H	H	L

When used to indicate an input, X = Irrelevant.
H = High level, L = Low level.

ADDRESS INPUTS		DATA INPUTS				STROBE	OUTPUT
B	A	C_0	C_1	C_2	C_3	G	Y
X	X	x	x	x	x	H	L
L	L	L	x	x	x	L	L
L	L	H	x	x	x	L	H
L	H	x	L	x	x	L	L
L	H	x	H	x	x	L	H
H	L	x	x	L	x	L	L
H	L	x	x	H	x	L	H
H	H	x	x	x	L	L	L
H	H	x	x	x	H	L	H

Address inputs A and B are common to both sections.
H = high level, L = low level, X = irrelevant.

Figure 3. Truth tables – Continued.

Device type 04

Address inputs		Data inputs				Outputs	
B	A	C_0	C_1	C_2	C_3	Y	W
L	L	L	X	X	X	L	H
L	L	H	X	X	X	H	L
L	H	X	L	X	X	L	H
L	H	X	H	X	X	H	L
H	L	X	X	L	X	L	H
H	L	X	X	H	X	H	L
H	H	X	X	X	L	L	H
H	H	X	X	X	H	H	L

Address inputs A and B are common to both sections.
H = High level, L = Low level, X = Irrelevant.

Device type 05

Strobe (enable)	Select input	Data inputs		Output
G	A	B_0	B_1	Y
H	X	X	X	L
L	H	X	L	L
L	H	X	H	H
L	L	L	X	L
L	L	H	X	H

Address A and strobe G are common to all sections.
H = High level, L = Low level, X = Irrelevant.

FIGURE 3. Truth tables – Continued.

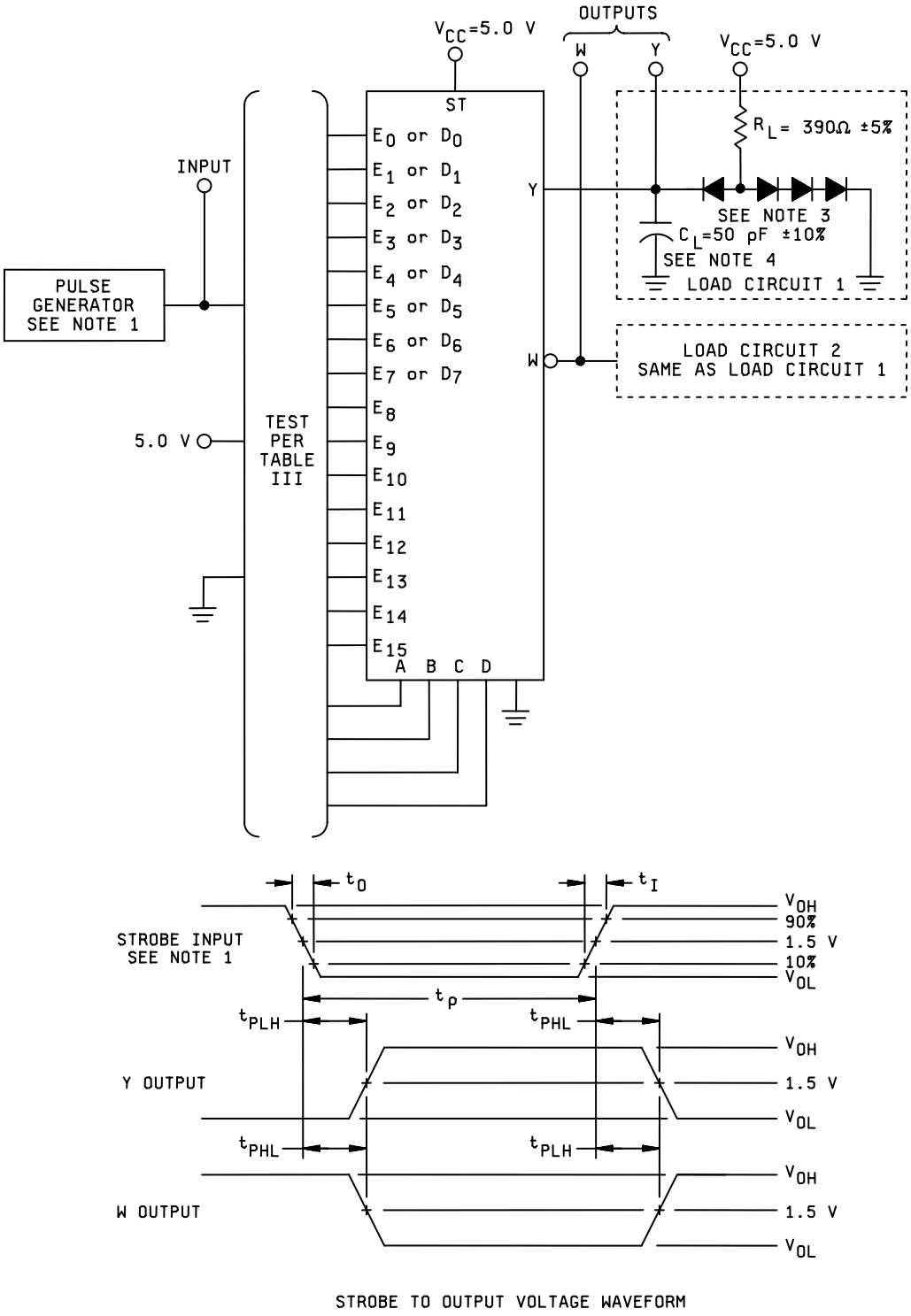

FIGURE 4. Switching test for device types 01, 02, and 06.

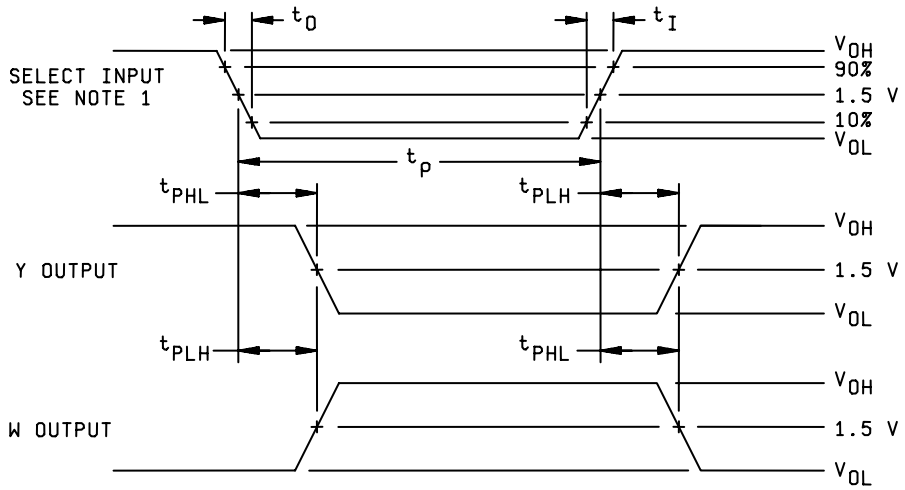

SELECT INPUT TO OUTPUT VOLTAGE WAVEFORM

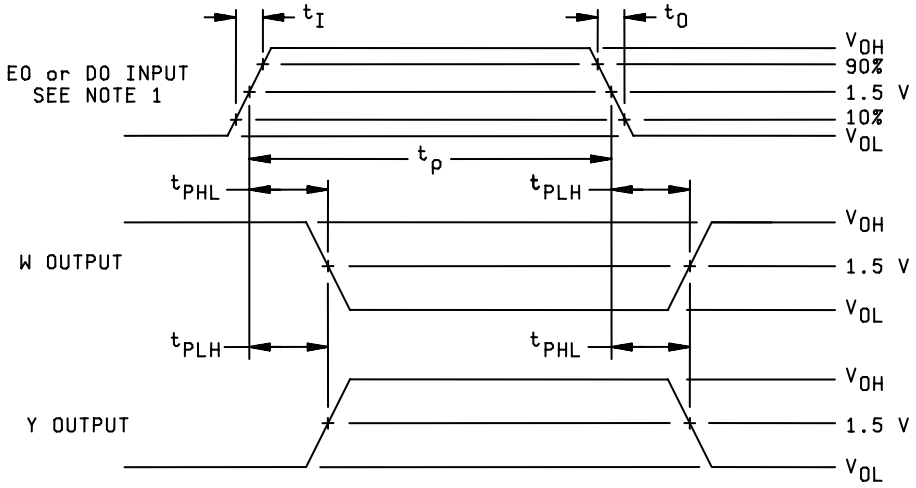

DATA INPUT TO OUTPUT VOLTAGE WAVEFORM

NOTES:

1. The input pulse has the following characteristics: V_{OH} = 3 V, V_{OL} = 0 V, $t_1 = t_0$ = 10 ns, t_p = 500 ns, PRR ≤ 1 MHz, duty cycle = 50% ±15%, and generator $Z_{out} \approx$ 50Ω.
2. C_L includes probe and jig capacitance.
3. All diodes are 1N3064 or equivalent.
4. Load circuits on a given output are only required where the specific test given in table III indicates “OUT” on that output. Load circuits may otherwise be omitted.

FIGURE 4. Switching test for device types 01, 02, and 06 - Continued.

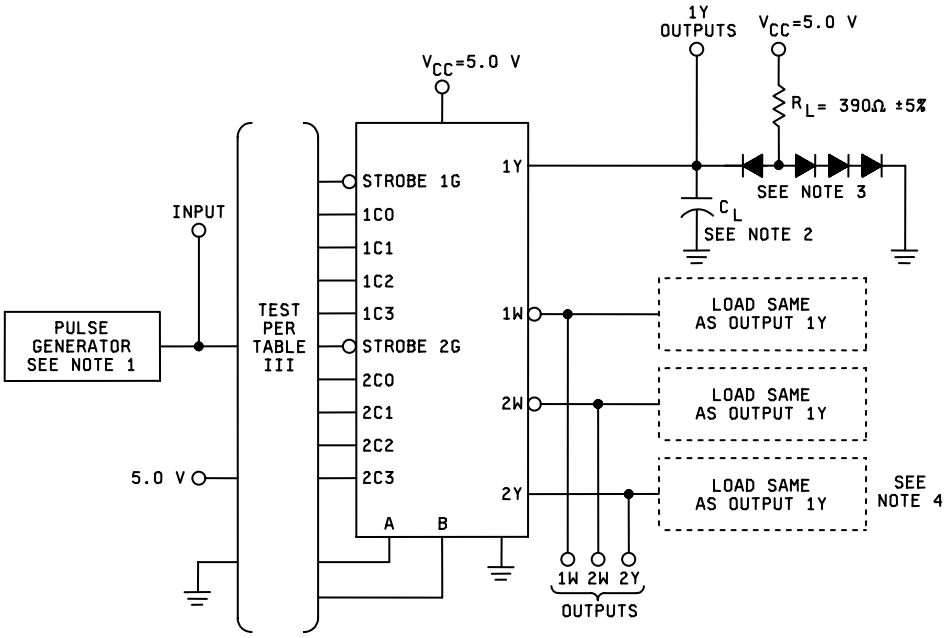

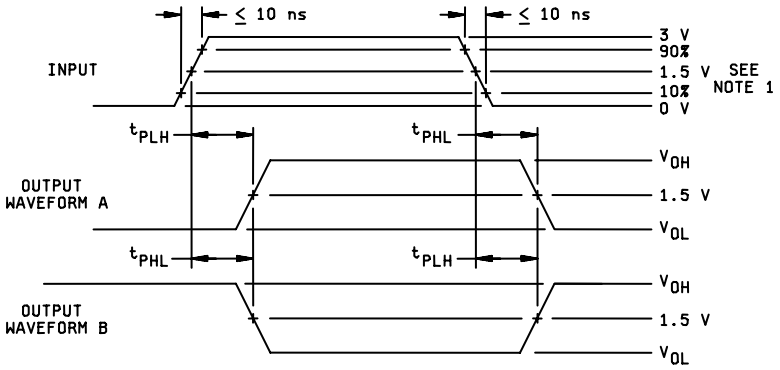

VOLTAGE WAVEFORMS

Switching time	Output waveform
CN to Y (types 03 and 04)	A
CN to W (type 04 only)	B
A or B to Y (types 03 and 04)	A
A or B to W (type 04 only)	B
G to Y (type 03 only)	B

NOTES:

1. The pulse generator has the following characteristics: PRR ≤ 1 MHz, duty cycle = 50% ±15% and Z_{out} ≈ 50Ω.
2. C_L = 50 pF ±10% and includes probe and jig capacitance.
3. All diodes are 1N3064, or equivalent.
4. Load circuits on a given output are only required where the specific test given in table III indicates “OUT” on that output. Load circuits may otherwise be omitted.

FIGURE 5. Switching test for device types 03 and 04.

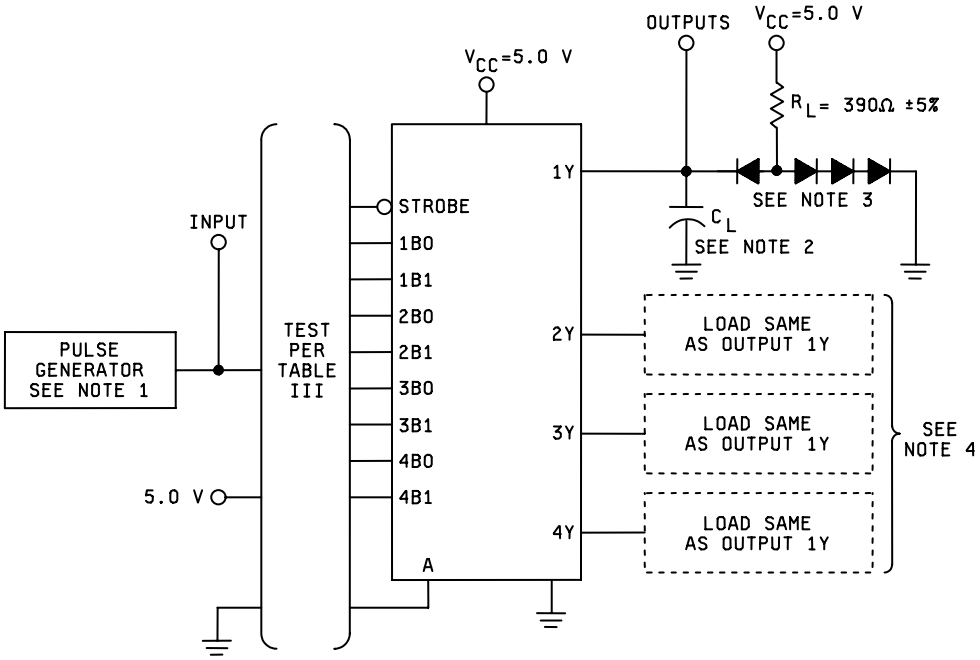

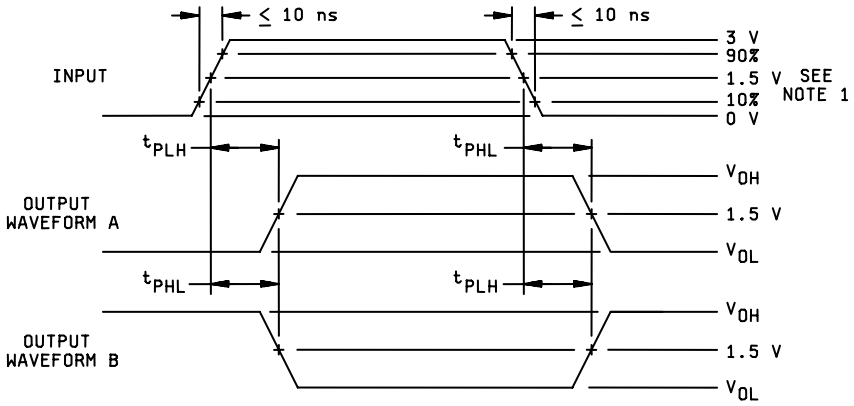

VOLTAGE WAVEFORMS

Input	Output waveform
A to Y	A
B to Y	A
S to Y	B

NOTES:

1. The pulse generator has the following characteristics: PRR ≤ 1 MHz, duty cycle = 50% ±15% and Z_{out} ≈ 50Ω.
2. C_L = 50 pF ±10% and includes probe and jig capacitance.
3. All diodes are 1N3064 or equivalent.
4. Load circuits on a given output are only required where the specific test given in table III indicates “OUT” on that output. Load circuits may otherwise be omitted.

FIGURE 6. Switching test for device type 05.

TABLE III. Group A inspection for device type 01.
Terminal conditions (pins not designated may be H ≥ 2.0 V, or L ≤ 0.8 V, or open).

Subgroup	Symbol	MIL-STD-883 method	Cases J, K, Z	1	2	3	4	5	6	7	8	9	10	11	12	Meas. terminal	Test limits		
			Test No.	E_7	E_6	E_5	E_4	E_3	E_2	E_1	E_0	G	W	D	GND		Min	Max	Unit
1	V_{OH}	3006	1									2.0 V	-.8mA		GND	W	2.4		V
T_C = 25°C	V_{OL}	3007	2								2.0 V	0.8 V	16mA	GND	"	W		0.4	V
"	V_{IC}		3												"	A		-1.5	V
"	"		4												"	B		"	"
"	"		5												"	C		"	"
"	"		6											-12mA	"	D		"	"
"	"		7									-12mA			"	G		"	"
"	"		8								-12mA				"	E_0		"	"
"	"		9							-12mA					"	E_1		"	"
"	"		10						-12mA						"	E_2		"	"
"	"		11					-12mA							"	E_3		"	"
"	"		12				-12mA								"	E_4		"	"
"	"		13			-12mA									"	E_5		"	"
"	"		14		-12mA										"	E_6		"	"
"	"		15	-12mA											"	E_7		"	"
"	"		16												"	E_8		"	"
"	"		17												"	E_9		"	"
"	"		18												"	E_{10}		"	"
"	"		19												"	E_{11}		"	"
"	"		20												"	E_{12}		"	"
"	"		21												"	E_{13}		"	"
"	"		22												"	E_{14}		"	"
"	"		23												"	E_{15}		"	"
"	I_{IL}	3009	24								0.4 V	GND		GND	"	E_0	-0.7	-1.6	mA
"	"	"	25							0.4 V		"		"	"	E_1	1/	"	"
"	"	"	26						0.4 V			"		"	"	E_2	"	"	"
"	"	"	27					0.4 V				"		"	"	E_3	"	"	"
"	"	"	28				0.4 V					"		"	"	E_4	"	"	"
"	"	"	29			0.4 V						"		"	"	E_5	"	"	"
"	"	"	30		0.4 V							"		"	"	E_6	"	"	"
"	"	"	31	0.4 V								"		"	"	E_7	"	"	"
"	"	"	32									"		5.5 V	"	E_8	"	"	"
"	"	"	33									"		"	"	E_9	"	"	"
"	"	"	34									"		"	"	E_{10}	"	"	"
"	"	"	35									"		"	"	E_{11}	"	"	"
"	"	"	36									"		"	"	E_{12}	"	"	"
"	"	"	37									"		"	"	E_{13}	"	"	"
"	"	"	38									"		"	"	E_{14}	"	"	"
"	"	"	39									"		"	"	E_{15}	"	"	"
"	"	"	40									0.4 V			"	G	"	"	"
"	"	"	41												"	A	"	"	"
"	"	"	42												"	B	"	"	"
"	"	"	43												"	C	"	"	"
"	"	"	44											0.4 V	"	D	"	"	"

TABLE III. Group A inspection for device type 01.
Terminal conditions (pins not designated may be H ≥ 2.0 V, or L ≤ 0.8 V, or open).

Subgroup	Symbol	MIL-STD-883 method	Cases J, K, Z	13	14	15	16	17	18	19	20	21	22	23	24	Meas. terminal	Test limits		
			Test No.	C	B	A	E_{15}	E_{14}	E_{13}	E_{12}	E_{11}	E_{10}	E_9	E_8	V_{CC}		Min	Max	Unit
1	V_{OH}	3006	1												4.5 V	W	2.4		V
T_C = 25°C	V_{OL}	3007	2	GND	GND	GND									"	W		0.4	V
"	V_{IC}		3			-12mA									"	A		-1.5	V
"	"		4		-12mA										"	B		"	"
"	"		5	-12mA											"	C		"	"
"	"		6												"	D		"	"
"	"		7												"	G		"	"
"	"		8												"	E_0		"	"
"	"		9												"	E_1		"	"
"	"		10												"	E_2		"	"
"	"		11												"	E_3		"	"
"	"		12												"	E_4		"	"
"	"		13												"	E_5		"	"
"	"		14												"	E_6		"	"
"	"		15												"	E_7		"	"
"	"		16											-12mA	"	E_8		"	"
"	"		17										-12mA		"	E_9		"	"
"	"		18									-12mA			"	E_{10}		"	"
"	"		19								-12mA				"	E_{11}		"	"
"	"		20							-12mA					"	E_{12}		"	"
"	"		21						-12mA						"	E_{13}		"	"
"	"		22					-12mA							"	E_{14}		"	"
"	"		23				-12mA								"	E_{15}		"	"
"	I_{IL}	3009	24	GND	GND	GND									5.5 V	E_0	-0.7	-1.6	mA
"	"	"	25	"	GND	5.5 V									"	E_1	1/	"	"
"	"	"	26	"	5.5 V	GND									"	E_2	"	"	"
"	"	"	27	"	5.5 V	5.5 V									"	E_3	"	"	"
"	"	"	28	5.5 V	GND	GND									"	E_4	"	"	"
"	"	"	29	"	GND	5.5 V									"	E_5	"	"	"
"	"	"	30	"	5.5 V	GND									"	E_6	"	"	"
"	"	"	31	"	5.5 V	5.5 V									"	E_7	"	"	"
"	"	"	32	GND	GND	GND								0.4 V	"	E_8	"	"	"
"	"	"	33	"	GND	5.5 V							0.4 V		"	E_9	"	"	"
"	"	"	34	"	5.5 V	GND						0.4 V			"	E_{10}	"	"	"
"	"	"	35	"	5.5 V	5.5 V					0.4 V				"	E_{11}	"	"	"
"	"	"	36	5.5 V	GND	GND				0.4 V					"	E_{12}	"	"	"
"	"	"	37	"	GND	5.5 V			0.4 V						"	E_{13}	"	"	"
"	"	"	38	"	5.5 V	GND		0.4 V							"	E_{14}	"	"	"
"	"	"	39	"	5.5 V	5.5 V	0.4 V								"	E_{15}	"	"	"
"	"	"	40												"	G	"	"	"
"	"	"	41			0.4 V									"	A	"	"	"
"	"	"	42		0.4 V										"	B	"	"	"
"	"	"	43	0.4 V											"	C	"	"	"
"	"	"	44												"	D	"	"	"

See note at end of device type 01.

TABLE III. Group A inspection for device type 01 – Continued.
Terminal conditions (pins not designated may be H ≥ 2.0 V, or L ≤ 0.8 V, or open).

Subgroup	Symbol	MIL-STD-883 method	Cases J, K, Z	1	2	3	4	5	6	7	8	9	10	11	12	Meas. terminal	Test limits		
			Test No.	E_7	E_6	E_5	E_4	E_3	E_2	E_1	E_0	G	W	D	GND		Min	Max	Unit
1	I_{IH1}	3010	45									2.4 V			GND	G		40	µA
T_C = 25°C	"	"	46											GND	"	A		"	"
"	"	"	47											GND	"	B		"	"
"	"	"	48											GND	"	C		"	"
"	"	"	49									5.5 V		2.4 V	"	D		"	"
"	"	"	50								2.4 V	"		5.5 V	"	E_0		"	"
"	"	"	51							2.4 V		"		"	"	E_1		"	"
"	"	"	52						2.4 V			"		"	"	E_2		"	"
"	"	"	53					2.4 V				"		"	"	E_3		"	"
"	"	"	54				2.4 V					"		"	"	E_4		"	"
"	"	"	55			2.4 V						"		"	"	E_5		"	"
"	"	"	56		2.4 V							"		"	"	E_6		"	"
"	"	"	57	2.4 V								"		"	"	E_7		"	"
"	"	"	58									"		GND	"	E_8		"	"
"	"	"	59									"		"	"	E_9		"	"
"	"	"	60									"		"	"	E_{10}		"	"
"	"	"	61									"		"	"	E_{11}		"	"
"	"	"	62									"		"	"	E_{12}		"	"
"	"	"	63									"		"	"	E_{13}		"	"
"	"	"	64									"		"	"	E_{14}		"	"
"	"	"	65									"		"	"	E_{15}		"	"
"	I_{IH2}	"	66									"			"	G		100	"
"	"	"	67									"		GND	"	A		"	"
"	"	"	68									"		GND	"	B		"	"
"	"	"	69									"		GND	"	C		"	"
"	"	"	70									"		5.5 V	"	D		"	"
"	"	"	71								5.5 V	"		"	"	E_0		"	"
"	"	"	72							5.5 V		"		"	"	E_1		"	"
"	"	"	73						5.5 V			"		"	"	E_2		"	"
"	"	"	74					5.5 V				"		"	"	E_3		"	"
"	"	"	75				5.5 V					"		"	"	E_4		"	"
"	"	"	75			5.5 V						"		"	"	E_5		"	"
"	"	"	77		5.5 V							"		"	"	E_6		"	"
"	"	"	78	5.5 V								"		"	"	E_7		"	"
"	"	"	79									"		GND	"	E_8		"	"
"	"	"	80									"		"	"	E_9		"	"
"	"	"	81									"		"	"	E_{10}		"	"
"	"	"	82									"		"	"	E_{11}		"	"
"	"	"	83									"		"	"	E_{12}		"	"
"	"	"	84									"		"	"	E_{13}		"	"
"	"	"	85									"		"	"	E_{14}		"	"
"	"	"	86									"		"	"	E_{15}		"	"
"	I_{OS}	3011	87								GND	GND	GND	GND	"	W	-20	-55	mA
"	I_{CC}	3005	88									5.5 V		5.5 V	"	V_{CC}		68	mA
2	Same tests, terminal conditions and limits as subgroup 1, except T_C = 125°C and V_{IC} are omitted.																		
3	Same tests, terminal conditions and limits as subgroup 1, except T_C = -55°C and V_{IC} are omitted.																		

TABLE III. Group A inspection for device type 01 – Continued.
Terminal conditions (pins not designated may be H ≥ 2.0 V, or L ≤ 0.8 V, or open).

Subgroup	Symbol	MIL-STD-883 method	Cases J, K, Z	13	14	15	16	17	18	19	20	21	22	23	24	Meas. terminal	Test limits		
			Test No.	C	B	A	E_{15}	E_{14}	E_{13}	E_{12}	E_{11}	E_{10}	E_9	E_8	V_{CC}		Min	Max	Unit
1	I_{IH1}	3010	45												5.5 V	G		40	µA
T_C = 25°C	"	"	46	GND	GND	2.4 V									"	A		"	"
"	"	"	47	GND	2.4 V	GND									"	B		"	"
"	"	"	48	2.4 V	GND	GND									"	C		"	"
"	"	"	49	GND	GND	GND									"	D		"	"
"	"	"	50	5.5 V	5.5 V	5.5 V									"	E_0		"	"
"	"	"	51	"	5.5 V	GND									"	E_1		"	"
"	"	"	52	"	GND	5.5 V									"	E_2		"	"
"	"	"	53	"	GND	GND									"	E_3		"	"
"	"	"	54	GND	5.5 V	5.5 V									"	E_4		"	"
"	"	"	55	"	5.5 V	GND									"	E_5		"	"
"	"	"	56	"	GND	5.5 V									"	E_6		"	"
"	"	"	57	"	GND	GND									"	E_7		"	"
"	"	"	58	5.5 V	5.5 V	5.5 V								2.4 V	"	E_8		"	"
"	"	"	59	"	5.5 V	GND							2.4 V		"	E_9		"	"
"	"	"	60	"	GND	5.5 V						2.4 V			"	E_{10}		"	"
"	"	"	61	"	GND	GND					2.4 V				"	E_{11}		"	"
"	"	"	62	GND	5.5 V	5.5 V				2.4 V					"	E_{12}		"	"
"	"	"	63	"	5.5 V	GND			2.4 V						"	E_{13}		"	"
"	"	"	64	"	GND	5.5 V		2.4 V							"	E_{14}		"	"
"	"	"	65	"	GND	GND	2.4 V								"	E_{15}		"	"
"	I_{IH2}	"	66	GND	GND										"	G		100	"
"	"	"	67	GND	GND	5.5 V									"	A		"	"
"	"	"	68	GND	5.5 V	GND									"	B		"	"
"	"	"	69	5.5 V	GND	GND									"	C		"	"
"	"	"	70	GND	GND	GND									"	D		"	"
"	"	"	71	5.5 V	5.5 V	5.5 V									"	E_0		"	"
"	"	"	72	"	5.5 V	GND									"	E_1		"	"
"	"	"	73	"	GND	5.5 V									"	E_2		"	"
"	"	"	74	"	GND	GND									"	E_3		"	"
"	"	"	75	GND	5.5 V	5.5 V									"	E_4		"	"
"	"	"	75	"	5.5 V	GND									"	E_5		"	"
"	"	"	77	"	GND	5.5 V									"	E_6		"	"
"	"	"	78	"	GND	GND									"	E_7		"	"
"	"	"	79	5.5 V	5.5 V	5.5 V								5.5 V	"	E_8		"	"
"	"	"	80	"	5.5 V	GND							5.5 V		"	E_9		"	"
"	"	"	81	"	GND	5.5 V						5.5 V			"	E_{10}		"	"
"	"	"	82	"	GND	GND					5.5 V				"	E_{11}		"	"
"	"	"	83	GND	5.5 V	5.5 V				5.5 V					"	E_{12}		"	"
"	"	"	84	"	5.5 V	GND			5.5 V						"	E_{13}		"	"
"	"	"	85	"	GND	5.5 V		5.5 V							"	E_{14}		"	"
"	"	"	86	"	GND	GND	5.5 V								"	E_{15}		"	"
"	I_{OS}	3011	87	GND	GND	GND									"	W	-20	-55	mA
"	I_{CC}	3005	88	5.5 V	5.5 V	5.5 V									"	V_{CC}		68	mA
2	Same tests, terminal conditions and limits as subgroup 1, except T_C = 125°C and V_{IC} are omitted.																		
3	Same tests, terminal conditions and limits as subgroup 1, except T_C = -55°C and V_{IC} are omitted.																		

See note at end of device type 01.

TABLE III. Group A inspection for device type 01 – Continued.
Terminal conditions (pins not designated may be H ≥ 2.0 V, or L ≤ 0.8 V, or open).

Subgroup	Symbol	MIL-STD-883 method	Cases J, K, Z	1	2	3	4	5	6	7	8	9	10	11	12	Meas. terminal	Test limits		
			Test No.	E_7	E_6	E_5	E_4	E_3	E_2	E_1	E_0	G	W	D	GND		Min	Max	Unit
7	Truth	3014	89									A 2/	H 3/		GND				
T_C = 25°C	table	"	90								B	B	H	B	"				
"	test	"	91								A	"	L	"	"				
"	"	"	92							B		"	H	"	"				
"	"	"	93							A		"	L	"	"				
"	"	"	94						B			"	H	"	"				
"	"	"	95						A			"	L	"	"				
"	"	"	96					B				"	H	"	"				
"	"	"	97					A				"	L	"	"				
"	"	"	98				B					"	H	"	"				
"	"	"	99				A					"	L	"	"				
"	"	"	100			B						"	H	"	"				
"	"	"	101			A						"	L	"	"				
"	"	"	102		B							"	H	"	"				
"	"	"	103		A							"	L	"	"				
"	"	"	104	B								"	H	"	"		3/		
"	"	"	105	A								"	L	"	"				
"	"	"	106									"	H	A	"				
"	"	"	107									"	L	"	"				
"	"	"	108									"	H	"	"				
"	"	"	109									"	L	"	"				
"	"	"	110									"	H	"	"				
"	"	"	111									"	L	"	"				
"	"	"	112									"	H	"	"				
"	"	"	113									"	L	"	"				
"	"	"	114									"	H	"	"				
"	"	"	115									"	L	"	"				
"	"	"	116									"	H	"	"				
"	"	"	117									"	L	"	"				
"	"	"	118									"	H	"	"				
"	"	"	119									"	L	"	"				
"	"	"	120									"	H	"	"				
"	"	"	121									"	L	"	"				
8	Repeat subgroup 7 at T_C = 125°C and T_C = -55°C.																		
9	t_{PHL1}	3003	122							5.0 V	GND	GND	OUT	GND	GND	A to W	8	37	ns
T_C = 25°C	"	(Fig 4)	123						5.0 V		"	"	"	"	"	B to W	"	"	"
"	"	"	124				5.0 V				"	"	"	"	"	C to W	"	"	"
"	"	"	125								"	"	"	IN	"	D to W	"	"	"
"	t_{PLH1}	"	126							5.0 V	GND	GND	OUT	GND	GND	A to W	8	39	ns
"	"	"	127						5.0 V		"	"	"	"	"	B to W	"	"	"
"	"	"	128				5.0 V				"	"	"	"	"	C to W	"	"	"
"	"	"	129								"	"	"	IN	"	D to W	"	"	"
"	t_{PHL2}	"	130								5.0 V	IN	OUT	GND	"	G to W	6	34	ns
"	t_{PLH2}	"	131								5.0 V	IN	OUT	GND	"	G to W	6	28	ns

TABLE III. Group A inspection for device type 01 – Continued.
Terminal conditions (pins not designated may be H ≥ 2.0 V, or L ≤ 0.8 V, or open).

Subgroup	Symbol	MIL-STD-883 method	Cases J, K, Z	13	14	15	16	17	18	19	20	21	22	23	24	Meas. terminal	Test limits		
			Test No.	C	B	A	E_{15}	E_{14}	E_{13}	E_{12}	E_{11}	E_{10}	E_9	E_8	V_{CC}		Min	Max	Unit
7	Truth	3014	89												4.5 V				
T_C = 25°C	table	"	90	B	B	B									"				
"	test	"	91	"	"	B									"				
"	"	"	92	"	"	A									"				
"	"	"	93	"	"	A									"				
"	"	"	94	"	A	B									"				
"	"	"	95	"	"	B									"				
"	"	"	96	"	"	A									"				
"	"	"	97	"	"	A									"				
"	"	"	98	A	B	B									"				
"	"	"	99	"	"	B									"				
"	"	"	100	"	"	A									"				
"	"	"	101	"	"	A									"				
"	"	"	102	"	A	B									"				
"	"	"	103	"	"	B									"				
"	"	"	104	"	"	A									"		3/		
"	"	"	105	"	"	A									"				
"	"	"	106	B	B	B								B	"				
"	"	"	107	"	"	B								A	"				
"	"	"	108	"	"	A							B		"				
"	"	"	109	"	"	A							A		"				
"	"	"	110	"	A	B						B			"				
"	"	"	111	"	"	B						A			"				
"	"	"	112	"	"	A					B				"				
"	"	"	113	"	"	A					A				"				
"	"	"	114	A	B	B				B					"				
"	"	"	115	"	"	B				A					"				
"	"	"	116	"	"	A			B						"				
"	"	"	117	"	"	A			A						"				
"	"	"	118	"	A	B		B							"				
"	"	"	119	"	"	B		A							"				
"	"	"	120	"	"	A	B								"				
"	"	"	121	"	"	A	A								"				
8	Repeat subgroup 7 at T_C = 125°C and T_C = -55°C.																		
9	t_{PHL1}	3003	122	GND	GND	IN									5.0 V	A to W	8	37	ns
T_C = 25°C	"	(Fig 4)	123	GND	IN	GND									"	B to W	"	"	"
"	"	"	124	IN	GND	"									"	C to W	"	"	"
"	"	"	125	GND	GND	"								5.0 V	"	D to W	"	"	"
"	t_{PLH1}	"	126	GND	GND	IN									5.0 V	A to W	8	39	ns
"	"	"	127	GND	IN	GND									"	B to W	"	"	"
"	"	"	128	IN	GND	"									"	C to W	"	"	"
"	"	"	129	GND	GND	"								5.0 V	"	D to W	"	"	"
"	t_{PHL2}	"	130	GND	GND	GND									"	G to W	6	34	ns
"	t_{PLH2}	"	131	GND	GND	GND									"	G to W	6	28	ns

See note at end of device type 01

TABLE III. Group A inspection for device type 01 – Continued.
Terminal conditions (pins not designated may be H ≥ 2.0 V, or L ≤ 0.8 V, or open).

Subgroup	Symbol	MIL-STD-883 method	Cases J, K, Z	1	2	3	4	5	6	7	8	9	10	11	12	Meas. terminal	Test limits		
			Test No.	E_7	E_6	E_5	E_4	E_3	E_2	E_1	E_0	G	W	D	GND		Min	Max	Unit
9	t_{PHL3}	3003	132								IN	GND	OUT	GND	GND	E_0 to W	3	18	ns
T_C = 25°C	"	(Fig 4)	133							IN		"	"	"	"	E_1 to W	"	"	"
"	"	"	134						IN			"	"	"	"	E_2 to W	"	"	"
"	"	"	135					IN				"	"	"	"	E_3 to W	"	"	"
"	"	"	136				IN					"	"	"	"	E_4 to W	"	"	"
"	"	"	137			IN						"	"	"	"	E_5 to W	"	"	"
"	"	"	138		IN							"	"	"	"	E_6 to W	"	"	"
"	"	"	139	IN								"	"	"	"	E_7 to W	"	"	"
"	"	"	140									"	"	5.0 V	"	E_8 to W	"	"	"
"	"	"	141									"	"	"	"	E_9 to W	"	"	"
"	"	"	142									"	"	"	"	E_{10} to W	"	"	"
"	"	"	143									"	"	"	"	E_{11} to W	"	"	"
"	"	"	144									"	"	"	"	E_{12} to W	"	"	"
"	"	"	145									"	"	"	"	E_{13} to W	"	"	"
"	"	"	146									"	"	"	"	E_{14} to W	"	"	"
"	"	"	147									"	"	"	"	E_{15} to W	"	"	"
"	t_{PLH3}	"	148								IN	"	OUT	GND	"	E_0 to W	3	24	ns
"	"	"	149							IN		"	"	"	"	E_1 to W	"	"	"
"	"	"	150						IN			"	"	"	"	E_2 to W	"	"	"
"	"	"	151					IN				"	"	"	"	E_3 to W	"	"	"
"	"	"	152				IN					"	"	"	"	E_4 to W	"	"	"
"	"	"	153			IN						"	"	"	"	E_5 to W	"	"	"
"	"	"	154		IN							"	"	"	"	E_6 to W	"	"	"
"	"	"	155	IN								"	"	"	"	E_7 to W	"	"	"
"	"	"	156									"	"	5.0 V	"	E_8 to W	"	"	"
"	"	"	157									"	"	"	"	E_9 to W	"	"	"
"	"	"	158									"	"	"	"	E_{10} to W	"	"	"
"	"	"	159									"	"	"	"	E_{11} to W	"	"	"
"	"	"	160									"	"	"	"	E_{12} to W	"	"	"
"	"	"	161									"	"	"	"	E_{13} to W	"	"	"
"	"	"	162									"	"	"	"	E_{14} to W	"	"	"
"	"	"	163									"	"	"	"	E_{15} to W	"	"	"
10	t_{PHL1}	"	164							5.0 V	GND	GND	OUT	GND	"	A to W	8	40	ns
T_C = 125°C	"	"	165						5.0 V		"	"	"	"	"	B to W	"	"	"
"	"	"	166				5.0 V				"	"	"	"	"	C to W	"	"	"
"	"	"	167								"	"	"	IN	"	D to W	"	"	"
"	t_{PLH1}	"	168								"	"	"	GND	"	A to W	"	43	"
"	"	"	169						5.0 V		"	"	"	"	"	B to W	"	"	"
"	"	"	170				5.0 V				"	"	"	"	"	C to W	"	"	"
"	"	"	171								"	"	"	IN	"	D to W	"	"	"
"	t_{PHL2}	"	172								5.0 V	IN	OUT	GND	"	G to W	6	37	ns
"	t_{PLH2}	"	173								5.0 V	IN	OUT	GND	"	G to W	6	32	ns

TABLE III. Group A inspection for device type 01 – Continued.
Terminal conditions (pins not designated may be H ≥ 2.0 V, or L ≤ 0.8 V, or open).

Subgroup	Symbol	MIL-STD-883 method	Cases J, K, Z	13	14	15	16	17	18	19	20	21	22	23	24	Meas. terminal	Test limits		
			Test No.	C	B	A	E_{15}	E_{14}	E_{13}	E_{12}	E_{11}	E_{10}	E_9	E_8	V_{CC}		Min	Max	Unit
9	t_{PHL3}	3003	132	GND	GND	GND									5.0 V	E_0 to W	3	18	ns
T_C = 25°C	"	(Fig 4)	133	"	GND	5.0 V									"	E_1 to W	"	"	"
"	"	"	134	"	5.0 V	GND									"	E_2 to W	"	"	"
"	"	"	135	"	5.0 V	5.0 V									"	E_3 to W	"	"	"
"	"	"	136	5.0 V	GND	GND									"	E_4 to W	"	"	"
"	"	"	137	"	GND	5.0 V									"	E_5 to W	"	"	"
"	"	"	138	"	5.0 V	GND									"	E_6 to W	"	"	"
"	"	"	139	"	5.0 V	5.0 V									"	E_7 to W	"	"	"
"	"	"	140	GND	GND	GND								IN	"	E_8 to W	"	"	"
"	"	"	141	"	GND	5.0 V							IN		"	E_9 to W	"	"	"
"	"	"	142	"	5.0 V	GND						IN			"	E_{10} to W	"	"	"
"	"	"	143	"	5.0 V	5.0 V					IN				"	E_{11} to W	"	"	"
"	"	"	144	5.0 V	GND	GND				IN					"	E_{12} to W	"	"	"
"	"	"	145	"	GND	5.0 V			IN						"	E_{13} to W	"	"	"
"	"	"	146	"	5.0 V	GND		IN							"	E_{14} to W	"	"	"
"	"	"	147	"	5.0 V	5.0 V	IN								"	E_{15} to W	"	"	"
"	t_{PLH3}	"	148	GND	GND	GND									"	E_0 to W	3	24	ns
"	"	"	149	"	GND	5.0 V									"	E_1 to W	"	"	"
"	"	"	150	"	5.0 V	GND									"	E_2 to W	"	"	"
"	"	"	151	"	5.0 V	5.0 V									"	E_3 to W	"	"	"
"	"	"	152	5.0 V	GND	GND									"	E_4 to W	"	"	"
"	"	"	153	"	GND	5.0 V									"	E_5 to W	"	"	"
"	"	"	154	"	5.0 V	GND									"	E_6 to W	"	"	"
"	"	"	155	"	5.0 V	5.0 V									"	E_7 to W	"	"	"
"	"	"	156	GND	GND	GND								IN	"	E_8 to W	"	"	"
"	"	"	157	"	GND	5.0 V							IN		"	E_9 to W	"	"	"
"	"	"	158	"	5.0 V	GND						IN			"	E_{10} to W	"	"	"
"	"	"	159	"	5.0 V	5.0 V					IN				"	E_{11} to W	"	"	"
"	"	"	160	5.0 V	GND	GND				IN					"	E_{12} to W	"	"	"
"	"	"	161	"	GND	5.0 V			IN						"	E_{13} to W	"	"	"
"	"	"	162	"	5.0 V	GND		IN							"	E_{14} to W	"	"	"
"	"	"	163	"	5.0 V	5.0 V	IN								"	E_{15} to W	"	"	"
10	t_{PHL1}	"	164	GND	GND	IN									"	A to W	8	40	ns
T_C = 125°C	"	"	165	GND	IN	GND									"	B to W	"	"	"
"	"	"	166	IN	GND	GND									"	C to W	"	"	"
"	"	"	167	GND	GND	GND								5.0 V	"	D to W	"	"	"
"	t_{PLH1}	"	168	GND	GND	IN									"	A to W	"	43	"
"	"	"	169	GND	IN	GND									"	B to W	"	"	"
"	"	"	170	IN	GND	GND									"	C to W	"	"	"
"	"	"	171	GND	GND	GND								5.0 V	"	D to W	"	"	"
"	t_{PHL2}	"	172	GND	GND	GND									"	G to W	6	37	ns
"	t_{PLH2}	"	173	GND	GND	GND									"	G to W	6	32	ns

See note at end of device type 01

TABLE III. Group A inspection for device type 01 – Continued.
Terminal conditions (pins not designated may be H ≥ 2.0 V, or L ≤ 0.8 V, or open).

Subgroup	Symbol	MIL-STD-883 method	Cases J, K, Z	1	2	3	4	5	6	7	8	9	10	11	12	Meas. terminal	Test limits		
			Test No.	E_7	E_6	E_5	E_4	E_3	E_2	E_1	E_0	G	W	D	GND		Min	Max	Unit
10	t_{PHL3}	3003	174								IN	GND	OUT	GND	GND	E_0 to W	3	23	ns
T_C = 125°C	"	(Fig 4)	175							IN		"	"	"	"	E_1 to W	"	"	"
"	"	"	176						IN			"	"	"	"	E_2 to W	"	"	"
"	"	"	177					IN				"	"	"	"	E_3 to W	"	"	"
"	"	"	178				IN					"	"	"	"	E_4 to W	"	"	"
"	"	"	179			IN						"	"	"	"	E_5 to W	"	"	"
"	"	"	180		IN							"	"	"	"	E_6 to W	"	"	"
"	"	"	181	IN								"	"	"	"	E_7 to W	"	"	"
"	"	"	182									"	"	5.0 V	"	E_8 to W	"	"	"
"	"	"	183									"	"	"	"	E_9 to W	"	"	"
"	"	"	184									"	"	"	"	E_{10} to W	"	"	"
"	"	"	185									"	"	"	"	E_{11} to W	"	"	"
"	"	"	186									"	"	"	"	E_{12} to W	"	"	"
"	"	"	187									"	"	"	"	E_{13} to W	"	"	"
"	"	"	188									"	"	"	"	E_{14} to W	"	"	"
"	"	"	189									"	"	"	"	E_{15} to W	"	"	"
"	t_{PLH3}	"	190								IN	"	"	GND	"	E_0 to W	3	30	ns
"	"	"	191							IN		"	"	"	"	E_1 to W	"	"	"
"	"	"	192						IN			"	"	"	"	E_2 to W	"	"	"
"	"	"	193					IN				"	"	"	"	E_3 to W	"	"	"
"	"	"	194				IN					"	"	"	"	E_4 to W	"	"	"
"	"	"	195			IN						"	"	"	"	E_5 to W	"	"	"
"	"	"	196		IN							"	"	"	"	E_6 to W	"	"	"
"	"	"	197	IN								"	"	"	"	E_7 to W	"	"	"
"	"	"	198									"	"	5.0 V	"	E_8 to W	"	"	"
"	"	"	199									"	"	"	"	E_9 to W	"	"	"
"	"	"	200									"	"	"	"	E_{10} to W	"	"	"
"	"	"	201									"	"	"	"	E_{11} to W	"	"	"
"	"	"	202									"	"	"	"	E_{12} to W	"	"	"
"	"	"	203									"	"	"	"	E_{13} to W	"	"	"
"	"	"	204									"	"	"	"	E_{14} to W	"	"	"
"	"	"	205									"	"	"	"	E_{15} to W	"	"	"
11	Same tests, terminal conditions and limits as subgroup 10 except T_C = -55°C.																		

TABLE III. Group A inspection for device type 01 – Continued.
Terminal conditions (pins not designated may be H ≥ 2.0 V, or L ≤ 0.8 V, or open).

Subgroup	Symbol	MIL-STD-883 method	Cases J, K, Z	13	14	15	16	17	18	19	20	21	22	23	24	Meas. terminal	Test limits		
			Test No.	C	B	A	E_{15}	E_{14}	E_{13}	E_{12}	E_{11}	E_{10}	E_9	E_8	V_{CC}		Min	Max	Unit
10	t_{PHL3}	3003	174	GND	GND	GND									5.0 V	E_0 to W	3	23	ns
T_C = 125°C	"	(Fig 4)	175	"	GND	5.0 V									"	E_1 to W	"	"	"
"	"	"	176	"	5.0 V	GND									"	E_2 to W	"	"	"
"	"	"	177	"	5.0 V	5.0 V									"	E_3 to W	"	"	"
"	"	"	178	5.0 V	GND	GND									"	E_4 to W	"	"	"
"	"	"	179	"	GND	5.0 V									"	E_5 to W	"	"	"
"	"	"	180	"	5.0 V	GND									"	E_6 to W	"	"	"
"	"	"	181	"	5.0 V	5.0 V									"	E_7 to W	"	"	"
"	"	"	182	GND	GND	GND								IN	"	E_8 to W	"	"	"
"	"	"	183	"	GND	5.0 V							IN		"	E_9 to W	"	"	"
"	"	"	184	"	5.0 V	GND						IN			"	E_{10} to W	"	"	"
"	"	"	185	"	5.0 V	5.0 V					IN				"	E_{11} to W	"	"	"
"	"	"	186	5.0 V	GND	GND				IN					"	E_{12} to W	"	"	"
"	"	"	187	"	GND	5.0 V			IN						"	E_{13} to W	"	"	"
"	"	"	188	"	5.0 V	GND		IN							"	E_{14} to W	"	"	"
"	"	"	189	"	5.0 V	5.0 V	IN								"	E_{15} to W	"	"	"
"	t_{PLH3}	"	190	GND	GND	GND									"	E_0 to W	3	30	ns
"	"	"	191	"	GND	5.0 V									"	E_1 to W	"	"	"
"	"	"	192	"	5.0 V	GND									"	E_2 to W	"	"	"
"	"	"	193	"	5.0 V	5.0 V									"	E_3 to W	"	"	"
"	"	"	194	5.0 V	GND	GND									"	E_4 to W	"	"	"
"	"	"	195	"	GND	5.0 V									"	E_5 to W	"	"	"
"	"	"	196	"	5.0 V	GND									"	E_6 to W	"	"	"
"	"	"	197	"	5.0 V	5.0 V									"	E_7 to W	"	"	"
"	"	"	198	GND	GND	GND								IN	"	E_8 to W	"	"	"
"	"	"	199	"	GND	5.0 V							IN		"	E_9 to W	"	"	"
"	"	"	200	"	5.0 V	GND						IN			"	E_{10} to W	"	"	"
"	"	"	201	"	5.0 V	5.0 V					IN				"	E_{11} to W	"	"	"
"	"	"	202	5.0 V	GND	GND				IN					"	E_{12} to W	"	"	"
"	"	"	203	"	GND	5.0 V			IN						"	E_{13} to W	"	"	"
"	"	"	204	"	5.0 V	GND		IN							"	E_{14} to W	"	"	"
"	"	"	205	"	5.0 V	5.0 V	IN								"	E_{15} to W	"	"	"
11	Same tests, terminal conditions and limits as subgroup 10 except T_C = -55°C.																		

1/ I_{IL} minimum limit for CKT E is -0.6 mA.
2/ A = 3.0 V minimum, B = 0.0 V or GND.
3/ H > 1.5 V; L < 1.5 V.
Only attributes data is required for subgroups 7 and 8.

TABLE III. Group A inspection for device type 02.

Terminal conditions (pins not designated may be H ≥ 2.0 V, or L ≤ 0.8 V, or open).

Subgroup	Symbol	MIL-STD-883 method	Cases E, F	1	2	3	4	5	6	7	8	9	10	11	12	13	14	15	16	Meas. terminal	Test limits		
			Test No.	D_0	D_1	D_2	D_3	D_4	D_5	D_6	GND	D_7	G	A	B	C	W	Y	V_{CC}		Min	Max	Unit
1	V_{OH}	3006	1	2.0 V							GND		0.8 V	0.8 V	0.8 V	0.8 V		-0.8 mA	4.5 V	Y	2.4		V
T_C = 25°C	V_{OH}	3006	2								"		2.0 V	2.0 V	2.0 V	2.0 V	-0.8 mA		"	W	2.4		"
"	V_{OL}	3007	3								"		2.0 V	2.0 V	2.0 V	2.0 V		16 mA	"	Y		0.4	"
"	V_{OL}	3007	4	2.0 V							"		0.8 V	0.8 V	0.8 V	0.8 V	16 mA		"	W		0.4	"
"	V_{IC}		5	-12 mA							"								"	D_0		-1.5	"
"	"		6		-12 mA						"								"	D_1		"	"
"	"		7			-12 mA					"								"	D_2		"	"
"	"		8				-12 mA				"								"	D_3		"	"
"	"		9					-12 mA			"								"	D_4		"	"
"	"		10						-12 mA		"								"	D_5		"	"
"	"		11							-12 mA	"								"	D_6		"	"
"	"		12								"	-12 mA							"	D_7		"	"
"	"		13								"		-12 mA						"	G		"	"
"	"		14								"			-12 mA					"	A		"	"
"	"		15								"				-12 mA				"	B		"	"
"	"		16								"					-12 mA			"	C		"	"
"	I_{IL}	3009	17								"		0.4 V	5.5 V	5.5 V	5.5 V			5.5 V	G	-0.7	-1.6	mA
"	"	"	18								"		GND	0.4 V	5.5 V	"			"	A	"	"	"
"	"	"	19								"		"	5.5 V	0.4 V	"			"	B	"	"	"
"	"	"	20								"		"	5.5 V	5.5 V	0.4 V			"	C	"	"	"
"	"	"	21	0.4 V							"		"	GND	GND	GND			"	D_0	"	"	"
"	"	"	22		0.4 V						"		"	5.5 V	GND	"			"	D_1	"	"	"
"	"	"	23			0.4 V					"		"	GND	5.5 V	"			"	D_2	"	"	"
"	"	"	24				0.4 V				"		"	5.5 V	5.5 V	"			"	D_3	"	"	"
"	"	"	25					0.4 V			"		"	GND	GND	5.5 V			"	D_4	"	"	"
"	"	"	26						0.4 V		"		"	5.5 V	GND	"			"	D_5	"	"	"
"	"	"	27							0.4 V	"		"	GND	5.5 V	"			"	D_6	"	"	"
"	"	"	28								"	0.4 V	"	5.5 V	5.5 V	"			"	D_7	"	"	"
"	I_{IH1}	3010	29								"		2.4 V	GND	GND	GND			"	G		40	µA
"	"	"	30								"		5.5 V	2.4 V	GND	GND			"	A		"	"
"	"	"	31								"		"	GND	2.4 V	GND			"	B		"	"
"	"	"	32								"		"	GND	GND	2.4 V			"	C		"	"
"	"	"	33	2.4 V							"		"	5.5 V	5.5 V	5.5 V			"	D_0		"	"
"	"	"	34		2.4 V						"		"	GND	5.5 V	"			"	D_1		"	"
"	"	"	35			2.4 V					"		"	5.5 V	GND	"			"	D_2		"	"
"	"	"	36				2.4 V				"		"	GND	GND	"			"	D_3		"	"
"	"	"	37					2.4 V			"		"	5.5 V	5.5 V	GND			"	D_4		"	"
"	"	"	38						2.4 V		"		"	GND	5.5 V	"			"	D_5		"	"
"	"	"	39							2.4 V	"		"	5.5 V	GND	"			"	D_6		"	"
"	"	"	40								"	2.4 V	"	GND	GND	"			"	D_7		"	"

See note at end of device type 02.

TABLE III. Group A inspection for device type 02– Continued.
Terminal conditions (pins not designated may be H ≥ 2.0 V, or L ≤ 0.8 V, or open).

Subgroup	Symbol	MIL-STD-883 method	Cases E, F	1	2	3	4	5	6	7	8	9	10	11	12	13	14	15	16	Meas. terminal	Test limits		
			Test No.	D_0	D_1	D_2	D_3	D_4	D_5	D_6	GND	D_7	G	A	B	C	W	Y	V_{CC}		Min	Max	Unit
1	I_{IH2}	3010	41								GND		5.5 V	GND	GND	GND			5.5 V	G		100	µA
T_C = 25°C	"	"	42								"		GND	5.5 V	GND	"			"	A		"	"
"	"	"	43								"		"	GND	5.5 V	"			"	B		"	"
"	"	"	44								"		"	GND	GND	5.5 V			"	C		"	"
"	"	"	45	5.5 V							"		"	5.5 V	5.5 V	"			"	D_0		"	"
"	"	"	46		5.5 V						"		"	GND	5.5 V	"			"	D_1		"	"
"	"	"	47			5.5 V					"		"	5.5 V	GND	"			"	D_2		"	"
"	"	"	48				5.5 V				"		"	GND	GND	"			"	D_3		"	"
"	"	"	49					5.5 V			"		"	5.5 V	5.5 V	GND			"	D_4		"	"
"	"	"	50						5.5 V		"		"	GND	5.5 V	"			"	D_5		"	"
"	"	"	51							5.5 V	"		"	5.5 V	GND	"			"	D_6		"	"
"	"	"	52								"	5.5 V	"	GND	"	"			"	D_7		"	"
"	I_{OS}	3011	53	GND	GND	GND	GND	GND	GND	GND	"	GND	5.5 V	"	"	"	GND		"	Y	-20	-120	mA
"	I_{OS}	3011	54	5.5 V	"	"	"	"	"	"	"	"	GND	"	"	"		GND	"	W	-20	-120	mA
"	I_{CC}	3005	55	5.5 V	"	"	"	"	"	"	"	"	GND	"	"	"			"	V_{CC}		48	mA
2	Same tests, terminal conditions and limits as subgroup 1, except T_C = 125°C and V_{IC} tests are omitted.																						
3	Same tests, terminal conditions and limits as subgroup 1, except T_C = -55°C and V_{IC} tests are omitted.																						
7	Truth		56								GND		A 1/				H 2/	L	4.5 V				
T_C = 25°C	table		57	B							"		B	B	B	B	H	L	"				
"	test		58	A							"		"	B	"	"	L	H	"				
"	"		59		B						"		"	A	"	"	H	L	"				
"	"		60		A						"		"	A	"	"	L	H	"				
"	"		61			B					"		"	B	A	"	H	L	"				
"	"		62			A					"		"	B	"	"	L	H	"				
"	"		63				B				"		"	A	"	"	H	L	"				
"	"		64				A				"		"	A	"	"	L	H	"		2/		
"	"		65					B			"		"	B	B	A	H	L	"				
"	"		66					A			"		"	B	"	"	L	H	"				
"	"		67						B		"		"	A	"	"	H	L	"				
"	"		68						A		"		"	A	"	"	L	H	"				
"	"		69							B	"		"	B	A	"	H	L	"				
"	"		70							A	"		"	B	"	"	L	H	"				
"	"		71								"	B	"	A	"	"	H	L	"				
"	"		72								"	A	"	A	"	"	L	H	"				
8	Repeat subgroup 7 at T_C = 125°C and T_C = -55°C.																						

See note at end of device type 02.

TABLE III. Group A inspection for device type 02– Continued.
Terminal conditions (pins not designated may be H ≥ 2.0 V, or L ≤ 0.8 V, or open).

Subgroup	Symbol	MIL-STD-883 method	Cases E, F	1	2	3	4	5	6	7	8	9	10	11	12	13	14	15	16	Meas. terminal	Test limits		
			Test No.	D_0	D_1	D_2	D_3	D_4	D_5	D_6	GND	D_7	G	A	B	C	W	Y	V_{CC}		Min	Max	Unit
9	t_{PHL1}	3003	73	GND	5.0 V						GND		GND	IN	GND	GND	OUT		5.0 V	A to W	6	32	ns
T_C = 25°C	"	(Fig 4)	74	"		5.0 V					"		"	GND	IN	GND	"		"	B to W	"	"	"
"	"	"	75	"				5.0 V			"		"	GND	GND	IN	"		"	C to W	"	"	"
"	t_{PLH1}	"	76	"	5.0 V						"		"	IN	GND	GND	"		"	A to W	"	29	"
"	"	"	77	"		5.0 V					"		"	GND	IN	GND	"		"	B to W	"	"	"
"	"	"	78	"				5.0 V			"		"	GND	GND	IN	"		"	C to W	"	"	"
"	t_{PHL2}	"	79	"	5.0 V						"		"	IN	GND	GND		OUT	"	A to Y	"	40	"
"	"	"	80	"		5.0 V					"		"	GND	IN	GND		"	"	B to Y	"	"	"
"	"	"	81	"				5.0 V			"		"	GND	GND	IN		"	"	C to Y	"	"	"
"	t_{PLH2}	"	82	"	5.0 V						"		"	IN	GND	GND		"	"	A to Y	"	39	"
"	"	"	83	"		5.0 V					"		"	GND	IN	GND		"	"	B to Y	"	"	"
"	"	"	84	"				5.0 V			"		"	GND	GND	IN		"	"	C to Y	"	"	"
"	t_{PHL3}	"	85	5.0 V							"		IN	GND	GND	GND	OUT		"	G to W	6	28	"
"	t_{PLH3}	"	86	"							"		"	"	"	"	OUT		"	G to W	6	24	"
"	t_{PHL4}	"	87	"							"		"	"	"	"		OUT	"	G to Y	8	37	"
"	t_{PLH4}	"	88	"							"		"	"	"	"		OUT	"	G to Y	8	35	"
"	t_{PHL5}	"	89	IN							"		GND	GND	GND	GND	OUT		"	D_o to W	3	20	"
"	"	"	90		IN						"		"	5.0 V	GND	"	"		"	D_1 to W	"	"	"
"	"	"	91			IN					"		"	GND	5.0 V	"	"		"	D_2 to W	"	"	"
"	"	"	92				IN				"		"	5.0 V	5.0 V	"	"		"	D_3 to W	"	"	"
"	"	"	93					IN			"		"	GND	GND	5.0 V	"		"	D_4 to W	"	"	"
"	"	"	94						IN		"		"	5.0 V	GND	"	"		"	D_5 to W	"	"	"
"	"	"	95							IN	"		"	GND	5.0 V	"	"		"	D_6 to W	"	"	"
"	"	"	96								"	IN	"	5.0 V	5.0 V	"	"		"	D_7 to W	"	"	"
"	t_{PLH5}	"	97	IN							"		"	GND	GND	GND	"		"	D_o to W	"	17	"
"	"	"	98		IN						"		"	5.0 V	GND	"	"		"	D_1 to W	"	"	"
"	"	"	99			IN					"		"	GND	5.0 V	"	"		"	D_2 to W	"	"	"
"	"	"	100				IN				"		"	5.0 V	5.0 V	"	"		"	D_3 to W	"	"	"
"	"	"	101					IN			"		"	GND	GND	5.0 V	"		"	D_4 to W	"	"	"
"	"	"	102						IN		"		"	5.0 V	GND	"	"		"	D_5 to W	"	"	"
"	"	"	103							IN	"		"	GND	5.0 V	"	"		"	D_6 to W	"	"	"
"	"	"	104								"	IN	"	5.0 V	5.0 V	"	"		"	D_7 to W	"	"	"

See note at end of device type 02.

TABLE III. Group A inspection for device type 02– Continued.
Terminal conditions (pins not designated may be H ≥ 2.0 V, or L ≤ 0.8 V, or open).

Subgroup	Symbol	MIL-STD-883 method	Cases E, F	1	2	3	4	5	6	7	8	9	10	11	12	13	14	15	16	Meas. terminal	Test limits		
			Test No.	D_0	D_1	D_2	D_3	D_4	D_5	D_6	GND	D_7	G	A	B	C	W	Y	V_{CC}		Min	Max	Unit
9	t_{PHL6}	3003	105	IN							GND		GND	GND	GND	GND		OUT	5.0 V	D_0 to Y	6	29	ns
T_C = 25°C	“	(Fig 4)	106		IN						“		“	5.0 V	GND	“		“	“	D_1 to Y	“	“	“
“	“	“	107			IN					“		“	GND	5.0 V	“		“	“	D_2 to Y	“	“	“
“	“	“	108				IN				“		“	5.0 V	5.0 V	“		“	“	D_3 to Y	“	“	“
“	“	“	109					IN			“		“	GND	GND	5.0 V		“	“	D_4 to Y	“	“	“
“	“	“	110						IN		“		“	5.0 V	GND	“		“	“	D_5 to Y	“	“	“
“	“	“	111							IN	“		“	GND	5.0 V	“		“	“	D_6 to Y	“	“	“
“	“	“	112								“	IN	“	5.0 V	5.0 V	“		“	“	D_7 to Y	“	“	“
“	t_{PLH6}	“	113	IN							“		“	GND	GND	GND		“	“	D_0 to Y	6	29	“
“	“	“	114		IN						“		“	5.0 V	GND	“		“	“	D_1 to Y	“	“	“
“	“	“	115			IN					“		“	GND	5.0 V	“		“	“	D_2 to Y	“	“	“
“	“	“	116				IN				“		“	5.0 V	5.0 V	“		“	“	D_3 to Y	“	“	“
“	“	“	117					IN			“		“	GND	GND	5.0 V		“	“	D_4 to Y	“	“	“
“	“	“	118						IN		“		“	5.0 V	GND	“		“	“	D_5 to Y	“	“	“
“	“	“	119							IN	“		“	GND	5.0 V	“		“	“	D_6 to Y	“	“	“
“	“	“	120								“	IN	“	5.0 V	5.0 V	“		“	“	D_7 to Y	“	“	“
10	t_{PHL1}	“	121	GND	5.0 V						“		“	IN	GND	GND	OUT		“	A to W	6	40	“
T_C = 125°C	“	“	122	“		5.0 V					“		“	GND	IN	GND	“		“	B to W	“	“	“
“	“	“	123	“				5.0 V			“		“	GND	GND	IN	“		“	C to W	“	“	“
“	t_{PLH1}	“	124	“	5.0 V						“		“	IN	GND	GND	“		“	A to W	“	38	“
“	“	“	125	“		5.0 V					“		“	GND	IN	GND	“		“	B to W	“	“	“
“	“	“	126	“				5.0 V			“		“	GND	GND	IN	“		“	C to W	“	“	“
“	t_{PHL2}	“	127	“	5.0 V						“		“	IN	GND	GND		OUT	“	A to Y	8	49	“
“	“	“	128	“		5.0 V					“		“	GND	IN	GND		“	“	B to Y	“	“	“
“	“	“	129	“				5.0 V			“		“	GND	GND	IN		“	“	C to Y	“	“	“
“	t_{PLH2}	“	130	“	5.0 V						“		“	IN	GND	GND		“	“	A to Y	“	45	“
“	“	“	131	“		5.0 V					“		“	GND	IN	GND		“	“	B to Y	“	“	“
“	“	“	132	“				5.0 V			“		“	GND	GND	IN		“	“	C to Y	“	“	“
“	t_{PHL3}	“	133	5.0 V							“		IN	GND	GND	GND	OUT		“	G to W	6	37	“
“	t_{PLH3}	“	134	“							“		“	“	“	“	OUT		“	G to W	6	35	“
“	t_{PHL4}	“	135	“							“		“	“	“	“		OUT	“	G to Y	8	46	“
“	t_{PLH4}	“	136	“							“		“	“	“	“		OUT	“	G to Y	8	42	“
“	t_{PHL5}	“	137	IN							“		GND	GND	GND	GND	OUT		“	D_0 to W	3	32	“
“	“	“	138		IN						“		“	5.0 V	GND	“	“		“	D_1 to W	“	“	“
“	“	“	139			IN					“		“	GND	5.0 V	“	“		“	D_2 to W	“	“	“
“	“	“	140				IN				“		“	5.0 V	5.0 V	“	“		“	D_3 to W	“	“	“
“	“	“	141					IN			“		“	GND	GND	5.0 V	“		“	D_4 to W	“	“	“
“	“	“	142						IN		“		“	5.0 V	GND	“	“		“	D_5 to W	“	“	“
“	“	“	143							IN	“		“	GND	5.0 V	“	“		“	D_6 to W	“	“	“
“	“	“	144								“	IN	“	5.0 V	5.0 V	“	“		“	D_7 to W	“	“	“

See note at end of device type 02.

TABLE III. Group A inspection for device type 02– Continued.
Terminal conditions (pins not designated may be H ≥ 2.0 V, or L ≤ 0.8 V, or open).

Subgroup	Symbol	MIL-STD-883 method	Cases E, F	1	2	3	4	5	6	7	8	9	10	11	12	13	14	15	16	Meas. terminal	Test limits		
			Test No.	D_0	D_1	D_2	D_3	D_4	D_5	D_6	GND	D_7	G	A	B	C	W	Y	V_{CC}		Min	Max	Unit
10	t_{PLH5}	3003	145	IN							GND		GND	GND	GND	GND	OUT		5.0 V	D_o to W	3	26	ns
T_C = 125°C	"	(Fig 4)	146		IN						"		"	5.0 V	GND	"	"		"	D_1 to W	"	"	"
"	"	"	147			IN					"		"	GND	5.0 V	"	"		"	D_2 to W	"	"	"
"	"	"	148				IN				"		"	5.0 V	5.0 V	"	"		"	D_3 to W	"	"	"
"	"	"	149					IN			"		"	GND	GND	5.0 V	"		"	D_4 to W	"	"	"
"	"	"	150						IN		"		"	5.0 V	GND	"	"		"	D_5 to W	"	"	"
"	"	"	151							IN	"		"	GND	5.0 V	"	"		"	D_6 to W	"	"	"
"	"	"	152								"	IN	"	5.0 V	5.0 V	"	"		"	D_7 to W	"	"	"
"	t_{PHL6}	"	153	IN							"		"	GND	GND	GND		OUT	"	D_o to Y	6	41	"
"	"	"	154		IN						"		"	5.0 V	GND	"		"	"	D_1 to Y	"	"	"
"	"	"	155			IN					"		"	GND	5.0 V	"		"	"	D_2 to Y	"	"	"
"	"	"	156				IN				"		"	5.0 V	5.0 V	"		"	"	D_3 to Y	"	"	"
"	"	"	157					IN			"		"	GND	GND	5.0 V		"	"	D_4 to Y	"	"	"
"	"	"	158						IN		"		"	5.0 V	GND	"		"	"	D_5 to Y	"	"	"
"	"	"	159							IN	"		"	GND	5.0 V	"		"	"	D_6 to Y	"	"	"
"	"	"	160								"	IN	"	5.0 V	5.0 V	"		"	"	D_7 to Y	"	"	"
"	t_{PLH6}	"	161	IN							"		"	GND	GND	GND		"	"	D_o to Y	"	33	"
"	"	"	162		IN						"		"	5.0 V	GND	"		"	"	D_1 to Y	"	"	"
"	"	"	163			IN					"		"	GND	5.0 V	"		"	"	D_2 to Y	"	"	"
"	"	"	164				IN				"		"	5.0 V	5.0 V	"		"	"	D_3 to Y	"	"	"
"	"	"	165					IN			"		"	GND	GND	5.0 V		"	"	D_4 to Y	"	"	"
"	"	"	166						IN		"		"	5.0 V	GND	"		"	"	D_5 to Y	"	"	"
"	"	"	167							IN	"		"	GND	5.0 V	"		"	"	D_6 to Y	"	"	"
"	"	"	168								"	IN	"	5.0 V	5.0 V	"		"	"	D_7 to Y	"	"	"
11	Same tests, terminal conditions and limits as subgroup 10, except T_A = -55°C.																						

1/ A = 3.0 V minimum, B = 0.0 V or GND.
2/ H > 1.5 V; L < 1.5 V.
Only attributes data is required for subgroups 7 and 8.

TABLE III. Group A inspection for device type 03.

Terminal conditions (pins not designated may be H ≥ 2.0 V, or L ≤ 0.8 V, or open).

Subgroup	Symbol	MIL-STD-883 method	Cases E, F	1	2	3	4	5	6	7	8	9	10	11	12	13	14	15	16	Meas. terminal	Test limits		
			Test No.	1G	B	$1C_3$	$1C_2$	$1C_1$	$1C_0$	1Y	GND	2Y	$2C_0$	$2C_1$	$2C_2$	$2C_3$	A	2G	V_{CC}		Min	Max	Unit
1	V_{OH}	3006	1	0.8 V	0.8 V				2.0 V	-.8 mA	GND						0.8 V		4.5 V	1Y	2.4		V
T_C = 25°C	V_{OH}	3006	2		0.8 V						"	-.8 mA	2.0 V				0.8 V	0.8 V	"	2Y	2.4		"
"	V_{OL}	3007	3	2.0 V						16 mA	"								"	1Y		0.4	"
"	V_{OL}	3007	4								"	16 mA						2.0 V	"	2Y		0.4	"
"	V_{IC}		5								"						-12 mA		"	A		-1.5	"
"	"		6		-12 mA						"								"	B		"	"
"	"		7						-12 mA		"								"	$1C_0$		"	"
"	"		8					-12 mA			"								"	$1C_1$		"	"
"	"		9				-12 mA				"								"	$1C_2$		"	"
"	"		10			-12 mA					"								"	$1C_3$		"	"
"	"		11	-12mA							"								"	1G		"	"
"	"		12								"		-12 mA						"	$2C_0$		"	"
"	"		13								"			-12 mA					"	$2C_1$		"	"
"	"		14								"				-12 mA				"	$2C_2$		"	"
"	"		15								"					-12 mA			"	$2C_3$		"	"
"	"		16								"							-12 mA	"	2G		"	"
"	I_{IL}	3009	17								"						0.4 V		5.5 V	A	-0.7	-1.6	mA
"	"	"	18		0.4 V						"								"	B	"	"	"
"	"	"	19	0.4 V							"								"	1G	"	"	"
"	"	"	20								"							0.4 V	"	2G	"	"	"
"	"	"	21	GND	GND				0.4 V		"						GND		"	$1C_0$	"	"	"
"	"	"	22	"	GND			0.4 V			"						5.5 V		"	$1C_1$	"	"	"
"	"	"	23	"	5.5 V		0.4 V				"						GND		"	$1C_2$	"	"	"
"	"	"	24	"	5.5 V	0.4 V					"						5.5 V		"	$1C_3$	"	"	"
"	"	"	25		GND						"		0.4 V				GND	GND	"	$2C_0$	"	"	"
"	"	"	26		GND						"			0.4 V			5.5 V	"	"	$2C_1$	"	"	"
"	"	"	27		5.5 V						"				0.4 V		GND	"	"	$2C_2$	"	"	"
"	"	"	28		5.5 V						"					0.4 V	5.5 V	"	"	$2C_3$	"	"	"
"	I_{IH1}	3010	29								"						2.4 V		"	A		40	µA
"	"	"	30		2.4 V						"								"	B		"	"
"	"	"	31	2.4 V							"								"	1G		"	"
"	"	"	32								"							2.4 V	"	2G		"	"
"	"	"	33	5.5 V	5.5 V				2.4 V		"						5.5 V		"	$1C_0$		"	"
"	"	"	34	"	5.5 V			2.4 V			"						GND		"	$1C_1$		"	"
"	"	"	35	"	GND		2.4 V				"						5.5 V		"	$1C_2$		"	"
"	"	"	36	"	GND	2.4 V					"						GND		"	$1C_3$		"	"
"	"	"	37		5.5 V						"		2.4 V				5.5 V	5.5 V	"	$2C_0$		"	"
"	"	"	38		5.5 V						"			2.4 V			GND	"	"	$2C_1$		"	"
"	"	"	39		GND						"				2.4 V		5.5 V	"	"	$2C_2$		"	"
"	"	"	40		GND						"					2.4 V	GND	"	"	$2C_3$		"	"

See notes at end of device type 03.

TABLE III. Group A inspection for device type 03 - Continued.
Terminal conditions (pins not designated may be H ≥ 2.0 V, or L ≤ 0.8 V, or open).

Subgroup	Symbol	MIL-STD-883 method	Cases E, F	1	2	3	4	5	6	7	8	9	10	11	12	13	14	15	16	Meas. terminal	Test limits		
			Test No.	1G	B	$1C_3$	$1C_2$	$1C_1$	$1C_0$	1Y	GND	2Y	$2C_0$	$2C_1$	$2C_2$	$2C_3$	A	2G	V_{CC}		Min	Max	Unit
1	I_{IH2}	3010	41								GND						5.5 V		5.5 V	A		100	µA
T_C = 25°C	"	"	42		5.5 V						"								"	B		"	"
"	"	"	43	5.5 V							"								"	1G		"	"
"	"	"	44								"							5.5 V	"	2G		"	"
"	"	"	45	5.5 V	5.5 V				5.5 V		"						5.5 V		"	$1C_0$		"	"
"	"	"	46	"	5.5 V			5.5 V			"						GND		"	$1C_1$		"	"
"	"	"	47	"	GND		5.5 V				"						5.5 V		"	$1C_2$		"	"
"	"	"	48	"	GND	5.5 V					"						GND		"	$1C_3$		"	"
"	"	"	49		5.5 V						"		5.5 V				5.5 V	5.5 V	"	$2C_0$		"	"
"	"	"	50		5.5 V						"			5.5 V			GND	"	"	$2C_1$		"	"
"	"	"	51		GND						"				5.5 V		5.5 V	"	"	$2C_2$		"	"
"	"	"	52		"						"					5.5 V	GND	"	"	$2C_3$		"	"
"	I_{OS}	3011	53	GND	"	GND	GND	GND	5.5 V	GND	"						"		"	1Y	-20	-55	mA
"	I_{OS}	3011	54	"	"						"	GND	5.5 V	GND	GND	GND	"	GND	"	2Y	-20	-55	mA
"	I_{CC}	3005	55	"	"	GND	GND	GND	GND		"		GND	GND	GND	GND	"	GND	"	V_{CC}		52	mA
2	Same tests, terminal conditions and limits as subgroup 1, except T_C = 125°C and V_{IC} tests are omitted.																						
3	Same tests, terminal conditions and limits as subgroup 1, except T_C = -55°C and V_{IC} tests are omitted.																						
7	Truth		56	A 1/						L 2/	GND	L						A	4.5 V				
T_C = 25°C	table		57	B	B				B	L	"	L	B				B	B	"				
"	test		58	"	B				A	H	"	H	A				B	"	"				
"	"		59	"	B			B		L	"	L		B			A	"	"				
"	"		60	"	B			A		H	"	H		A			A	"	"		2/		
"	"		61	"	A		B			L	"	L			B		B	"	"				
"	"		62	"	A		A			H	"	H			A		B	"	"				
"	"		63	"	A	B				L	"	L				B	A	"	"				
"	"		64	"	A	A				H	"	H				A	A	"	"				
8	Repeat subgroup 7 at T_C = 125°C and T_C = -55°C.																						
9	t_{PHL1}	3003	65	GND	GND				IN	OUT	GND						GND		5.0 V	$1C_0$ to 1Y	3	25	ns
T_C = 25°C	"	(Fig 5)	66	"	GND			IN		"	"						5.0 V		"	$1C_1$ to 1Y	"	"	"
"	"	"	67	"	5.0 V		IN			"	"						GND		"	$1C_2$ to 1Y	"	"	"
"	"	"	68	"	5.0 V	IN				"	"						5.0 V		"	$1C_3$ to 1Y	"	"	"
"	"	"	69		GND						"	OUT	IN				GND	GND	"	$2C_0$ to 2Y	"	"	"
"	"	"	70		GND						"	"		IN			5.0 V	"	"	$2C_1$ to 2Y	"	"	"
"	"	"	71		5.0 V						"	"			IN		GND	"	"	$2C_2$ to 2Y	"	"	"
"	"	"	72		5.0 V						"	"				IN	5.0 V	"	"	$2C_3$ to 2Y	"	"	"

See notes at end of device type 03.

TABLE III. Group A inspection for device type 03 - Continued.
Terminal conditions (pins not designated may be H ≥ 2.0 V, or L ≤ 0.8 V, or open).

Subgroup	Symbol	MIL-STD-883 method	Cases E, F	1	2	3	4	5	6	7	8	9	10	11	12	13	14	15	16	Meas. terminal	Test limits		
			Test No.	1G	B	$1C_3$	$1C_2$	$1C_1$	$1C_0$	1Y	GND	2Y	$2C_0$	$2C_1$	$2C_2$	$2C_3$	A	2G	V_{CC}		Min	Max	Unit
9	t_{PLH1}	3003	73	GND	GND				IN	OUT	GND						GND		5.0 V	$1C_0$ to 1Y	3	24	ns
T_C = 25°C	"	(Fig 5)	74	"	GND			IN		"	"						5.0 V		"	$1C_1$ to 1Y	"	"	"
"	"	"	75	"	5.0 V		IN			"	"						GND		"	$1C_2$ to 1Y	"	"	"
"	"	"	76	"	5.0 V	IN				"	"						5.0 V		"	$1C_3$ to 1Y	"	"	"
"	"	"	77		GND						"	OUT	IN				GND	GND	"	$2C_0$ to 2Y	"	"	"
"	"	"	78		GND						"	"		IN			5.0 V	"	"	$2C_1$ to 2Y	"	"	"
"	"	"	79		5.0 V						"	"			IN		GND	"	"	$2C_2$ to 2Y	"	"	"
"	"	"	80		5.0 V						"	"				IN	5.0 V	"	"	$2C_3$ to 2Y	"	"	"
"	t_{PHL2}	"	81	GND	GND			5.0 V	GND	OUT	"						IN		"	A to 1Y	6	36	"
"	"	"	82	GND	IN		5.0 V		GND	OUT	"						GND		"	B to 1Y	"	"	"
"	"	"	83		GND						"	OUT	GND	5.0 V			IN	GND	"	A to 2Y	"	"	"
"	"	"	84		IN						"	OUT	GND		5.0 V		GND	GND	"	B to 2Y	"	"	"
"	t_{PLH2}	"	85	GND	GND			5.0 V	GND	OUT	GND						IN		5.0 V	A to 1Y	6	34	"
"	"	"	86	GND	IN		5.0 V		GND	OUT	"						GND		"	B to 1Y	"	"	"
"	"	"	87		GND						"	OUT	GND	5.0 V			IN	GND	"	A to 2Y	"	"	"
"	"	"	88		IN						"	OUT	GND		5.0 V		GND	GND	"	B to 2Y	"	"	"
"	t_{PHL3}	"	89	IN	GND				5.0 V	OUT	"						GND		"	1G to 1Y	"	28	"
"	t_{PHL3}	"	90		GND						"	OUT	5.0 V				GND	IN	"	2G to 2Y	"	28	"
"	t_{PLH3}	"	91	IN	GND				5.0 V	OUT	"						GND		"	1G to 1Y	"	38	"
"	t_{PLH3}	"	92		GND						"	OUT	5.0 V				GND	IN	"	2G to 2Y	"	38	"
10	t_{PHL1}	"	93	GND	GND				IN	OUT	"						GND		"	$1C_0$ to 1Y	3	29	"
T_C = 125°C	"	"	94	"	GND			IN		"	"						5.0 V		"	$1C_1$ to 1Y	"	"	"
"	"	"	95	"	5.0 V		IN			"	"						GND		"	$1C_2$ to 1Y	"	"	"
"	"	"	96	"	5.0 V	IN				"	"						5.0 V		"	$1C_3$ to 1Y	"	"	"
"	"	"	97		GND						"	OUT	IN				GND	GND	"	$2C_0$ to 2Y	"	"	"
"	"	"	98		GND						"	"		IN			5.0 V	"	"	$2C_1$ to 2Y	"	"	"
"	"	"	99		5.0 V						"	"			IN		GND	"	"	$2C_2$ to 2Y	"	"	"
"	"	"	100		5.0 V						"	"				IN	5.0 V	"	"	$2C_3$ to 2Y	"	"	"
"	t_{PLH1}	"	101	GND	GND				IN	OUT	"						GND		"	$1C_0$ to 1Y	"	28	"
"	"	"	102	"	GND			IN		"	"						5.0 V		"	$1C_1$ to 1Y	"	"	"
"	"	"	103	"	5.0 V		IN			"	"						GND		"	$1C_2$ to 1Y	"	"	"
"	"	"	104	"	5.0 V	IN				"	"						5.0 V		"	$1C_3$ to 1Y	"	"	"
"	"	"	105		GND						"	OUT	IN				GND	GND	"	$2C_0$ to 2Y	"	"	"
"	"	"	106		GND						"	"		IN			5.0 V	"	"	$2C_1$ to 2Y	"	"	"
"	"	"	107		5.0 V						"	"			IN		GND	"	"	$2C_2$ to 2Y	"	"	"
"	"	"	108		5.0 V						"	"				IN	5.0 V	"	"	$2C_3$ to 2Y	"	"	"

See notes at end of device type 03.

TABLE III. Group A inspection for device type 03 - Continued.
Terminal conditions (pins not designated may be H ≥ 2.0 V, or L ≤ 0.8 V, or open).

Subgroup	Symbol	MIL-STD-883 method	Cases E, F	1	2	3	4	5	6	7	8	9	10	11	12	13	14	15	16	Meas. terminal	Test limits		
			Test No.	1G	B	$1C_3$	$1C_2$	$1C_1$	$1C_0$	1Y	GND	2Y	$2C_0$	$2C_1$	$2C_2$	$2C_3$	A	2G	V_{CC}		Min	Max	Unit
10	t_{PHL2}	3003	109	GND	GND			5.0 V	GND	OUT	GND						IN		5.0 V	A to 1Y	6	44	ns
T_C = 125°C	"	(Fig 5)	110	GND	IN		5.0 V		GND	OUT	"						GND		"	B to 1Y	"	"	"
"	"	"	111		GND						"	OUT	GND	5.0 V			IN	GND	"	A to 2Y	"	"	"
"	"	"	112		IN						"	OUT	GND		5.0 V		GND	GND	"	B to 2Y	"	"	"
"	t_{PLH2}	"	113	GND	GND			5.0 V	GND	OUT	"						IN		"	A to 1Y	"	42	"
"	"	"	114	GND	IN		5.0 V		GND	OUT	"						GND		"	B to 1Y	"	"	"
"	"	"	115		GND						"	OUT	GND	5.0 V			IN	GND	"	A to 2Y	"	"	"
"	"	"	116		IN						"	OUT	GND		5.0 V		GND	GND	"	B to 2Y	"	"	"
"	t_{PHL3}	"	117	IN	GND				5.0 V	OUT	"						GND		"	1G to 1Y	"	32	"
"	t_{PHL3}	"	118		GND						"	OUT	5.0 V				GND	IN	"	2G to 2Y	"	32	"
"	t_{PLH3}	"	119	IN	GND				5.0 V	OUT	"						GND		"	1G to 1Y	"	42	"
"	t_{PLH3}	"	120		GND						"	OUT	5.0 V				GND	IN	"	2G to 2Y	"	42	"
11	Same tests, terminal conditions and limits as subgroup 10, except T_C = -55°C.																						

1/ A = 3.0 V minimum, B = 0.0 V or GND.
2/ H > 1.5 V; L < 1.5 V.
Only attributes data is required for subgroups 7 and 8.

TABLE III. Group A inspection for device type 04.
Terminal conditions (pins not designated may be H ≥ 2.0 V, or L ≤ 0.8 V, or open).

Subgroup	Symbol	MIL-STD-883 method	Cases E, F	1	2	3	4	5	6	7	8	9	10	11	12	13	14	15	16	Meas. terminal	Test limits		
			Test No.	2Y	2W	B	$2C_0$	$2C_1$	$2C_2$	$2C_3$	GND	$1C_3$	$1C_2$	$1C_1$	$1C_0$	A	1W	1Y	V_{CC}		Min	Max	Unit
1	V_{OH}	3006	1			0.8 V					GND				2.0 V	0.8 V		-0.8 mA	4.5 V	1Y	2.4		V
T_C = 25°C	“	“	2			“					“				0.8 V	“	-0.8 mA		“	1W	“		“
“	“	“	3	-0.8 mA		“	2.0 V				“					“			“	2Y	“		“
“	“	“	4		-0.8 mA	“	0.8 V				“					“			“	2W	“		“
“	V_{OL}	3007	5			“					“				2.0 V	“	16 mA		“	1W		0.4	“
“	“	“	6			“					“				0.8 V	“		16 mA	“	1Y		“	“
“	“	“	7		16 mA	“	2.0 V				“					“			“	2W		“	“
“	“	“	8	16 mA		“	0.8 V				“					“			“	2Y		“	“
“	V_{IC}		9								“					-12 mA			“	A		-1.5	“
“	“		10			-12 mA					“								“	B		“	“
“	“		11								“				-12 mA				“	$1C_0$		“	“
“	“		12								“			-12 mA					“	$1C_1$		“	“
“	“		13								“		-12 mA						“	$1C_2$		“	“
“	“		14								“	-12 mA							“	$1C_3$		“	“
“	“		15				-12 mA				“								“	$2C_0$		“	“
“	“		16					-12 mA			“								“	$2C_1$		“	“
“	“		17						-12 mA		“								“	$2C_2$		“	“
“	“		18							-12 mA	“								“	$2C_3$		“	“
“	I_{IL}	3009	19								“					0.4 V			5.5 V	A	-0.7	-1.6	mA
“	“	“	20			0.4 V					“								“	B	“	“	“
“	“	“	21			GND					“				0.4 V	GND			“	$1C_0$	“	“	“
“	“	“	22			GND					“			0.4 V		5.5 V			“	$1C_1$	“	“	“
“	“	“	23			5.5 V					“		0.4 V			GND			“	$1C_2$	“	“	“
“	“	“	24			5.5 V					“	0.4 V				5.5 V			“	$1C_3$	“	“	“
“	“	“	25			GND	0.4 V				“					GND			“	$2C_0$	“	“	“
“	“	“	26			GND		0.4 V			“					5.5 V			“	$2C_1$	“	“	“
“	“	“	27			5.5 V			0.4 V		“					GND			“	$2C_2$	“	“	“
“	“	“	28			5.5 V				0.4 V	“					5.5 V			“	$2C_3$	“	“	“
“	I_{IH1}	3010	29								“					2.4 V			“	A		40	μA
“	“	“	30			2.4 V					“								“	B		“	“
“	“	“	31			5.5 V					“				2.4 V	5.5 V			“	$1C_0$		“	“
“	“	“	32			5.5 V					“			2.4 V		GND			“	$1C_1$		“	“
“	“	“	33			GND					“		2.4 V			5.5 V			“	$1C_2$		“	“
“	“	“	34			GND					“	2.4 V				GND			“	$1C_3$		“	“
“	“	“	35			5.5 V	2.4 V				“					5.5 V			“	$2C_0$		“	“
“	“	“	36			5.5 V		2.4 V			“					GND			“	$2C_1$		“	“
“	“	“	37			GND			2.4 V		“					5.5 V			“	$2C_2$		“	“
“	“	“	38			GND				2.4 V	“					GND			“	$2C_3$		“	“

See note at end of device type 04.

TABLE III. Group A inspection for device type 04 - Continued.
Terminal conditions (pins not designated may be H ≥ 2.0 V, or L ≤ 0.8 V, or open).

Subgroup	Symbol	MIL-STD-883 method	Cases E, F	1	2	3	4	5	6	7	8	9	10	11	12	13	14	15	16	Meas. terminal	Test limits		
			Test No.	2Y	2W	B	$2C_0$	$2C_1$	$2C_2$	$2C_3$	GND	$1C_3$	$1C_2$	$1C_1$	$1C_0$	A	1W	1Y	V_{CC}		Min	Max	Unit
1	I_{IH2}	3010	39								GND					5.5 V			5.5 V	A		100	ns
T_C = 25°C	"	"	40			5.5 V					"								"	B		"	"
"	"	"	41			"					"				5.5 V	5.5 V			"	$1C_0$		"	"
"	"	"	42			"					"			5.5 V		GND			"	$1C_1$		"	"
"	"	"	43			GND					"		5.5 V			5.5 V			"	$1C_2$		"	"
"	"	"	44			GND					"	5.5 V				GND			"	$1C_3$		"	"
"	"	"	45			5.5 V	5.5 V				"					5.5 V			"	$2C_0$		"	"
"	"	"	46			5.5 V		5.5 V			"					GND			"	$2C_1$		"	"
"	"	"	47			GND			5.5 V		"					5.5 V			"	$2C_2$		"	"
"	"	"	48			"				5.5 V	"					GND			"	$2C_3$		"	"
"	I_{OS}	3011	49			"					"	GND	GND	GND	GND	"	GND		"	1W	-20	-120	mA
"	"	"	50			"					"	GND	GND	GND	5.5 V	"		GND	"	1Y	"	"	"
"	"	"	51		GND	"	GND	GND	GND	GND	"					"			"	2W	"	"	"
"	"	"	52	GND		"	5.5 V	"	"	"	"					"			"	2Y	"	"	"
"	I_{CC}	3005	53			"	5.5 V	"	"	"	"	GND	GND	GND	5.5 V	"			"	V_{CC}		45	"
2	Same tests, terminal conditions and limits as subgroup 1, except T_C = 125°C and V_{IC} tests are omitted.																						
3	Same tests, terminal conditions and limits as subgroup 1, except T_C = -55°C and V_{IC} tests are omitted.																						
7	Truth		54	L 2/	H	B 1/	B				GND				B	B	H	L	4.5 V				
T_C = 25°C	table		55	H	L	"	A				"				A	B	L	H	"				
"	test		56	L	H	"		B			"			B		A	H	L	"				
"	"		57	H	L	"		A			"			A		A	L	H	"		2/		
"	"		58	L	H	A			B		"		B			B	H	L	"				
"	"		59	H	L	"			A		"		A			B	L	H	"				
"	"		60	L	H	"				B	"	B				A	H	L	"				
"	"		61	H	L	"				A	"	A				A	L	H	"				
8	Repeat subgroup 7 at T_C = 125°C and T_C = -55°C.																						
9	t_{PHL1}	3003	62			GND					GND				IN	GND		OUT	5.0 V	$1C_0$ to 1Y	3	29	ns
T_C = 25°C	"	(Fig 5)	63			GND					"			IN		5.0 V		"	"	$1C_1$ to 1Y	"	"	"
"	"	"	64			5.0 V					"		IN			GND		"	"	$1C_2$ to 1Y	"	"	"
"	"	"	65			5.0 V					"	IN				5.0 V		"	"	$1C_3$ to 1Y	"	"	"
"	"	"	66	OUT		GND	IN				"					GND			"	$2C_0$ to 2Y	"	"	"
"	"	"	67	"		GND		IN			"					5.0 V			"	$2C_1$ to 2Y	"	"	"
"	"	"	68	"		5.0 V			IN		"					GND			"	$2C_2$ to 2Y	"	"	"
"	"	"	69	"		5.0 V				IN	"					5.0 V			"	$2C_3$ to 2Y	"	"	"

See note at end of device type 04.

TABLE III. Group A inspection for device type 04 - Continued.
Terminal conditions (pins not designated may be H ≥ 2.0 V, or L ≤ 0.8 V, or open).

Subgroup	Symbol	MIL-STD-883 method	Cases E, F	1	2	3	4	5	6	7	8	9	10	11	12	13	14	15	16	Meas. terminal	Test limits		
			Test No.	2Y	2W	B	$2C_0$	$2C_1$	$2C_2$	$2C_3$	GND	$1C_3$	$1C_2$	$1C_1$	$1C_0$	A	1W	1Y	V_{CC}		Min	Max	Unit
9	t_{PLH1}	3003	70			GND					GND				IN	GND		OUT	5.0 V	$1C_0$ to 1Y	3	29	ns
T_C = 25°C	"	(Fig 5)	71			GND					"			IN		5.0 V		"	"	$1C_1$ to 1Y	"	"	"
"	"	"	72			5.0 V					"		IN			GND		"	"	$1C_2$ to 1Y	"	"	"
"	"	"	73			5.0 V					"	IN				5.0 V		"	"	$1C_3$ to 1Y	"	"	"
"	"	"	74	OUT		GND	IN				"					GND			"	$2C_0$ to 2Y	"	"	"
"	"	"	75	"		GND		IN			"					5.0 V			"	$2C_1$ to 2Y	"	"	"
"	"	"	76	"		5.0 V			IN		"					GND			"	$2C_2$ to 2Y	"	"	"
"	"	"	77	"		5.0 V				IN	"					5.0 V			"	$2C_3$ to 2Y	"	"	"
"	t_{PHL2}	"	78			GND					"				IN	GND	OUT		"	$1C_0$ to 1W	"	18	"
"	"	"	79			GND					"			IN		5.0 V	"		"	$1C_1$ to 1W	"	"	"
"	"	"	80			5.0 V					"		IN			GND	"		"	$1C_2$ to 1W	"	"	"
"	"	"	81			5.0 V					"	IN				5.0 V	"		"	$1C_3$ to 1W	"	"	"
"	"	"	82		OUT	GND	IN				"					GND			"	$2C_0$ to 2W	"	"	"
"	"	"	83		"	GND		IN			"					5.0 V			"	$2C_1$ to 2W	"	"	"
"	"	"	84		"	5.0 V			IN		"					GND			"	$2C_2$ to 2W	"	"	"
"	"	"	85		"	5.0 V				IN	"					5.0 V			"	$2C_3$ to 2W	"	"	"
"	t_{PLH2}	"	86			GND					"				IN	GND	OUT		"	$1C_0$ to 1W	"	17	"
"	"	"	87			GND					"			IN		5.0 V	"		"	$1C_1$ to 1W	"	"	"
"	"	"	88			5.0 V					"		IN			GND	"		"	$1C_2$ to 1W	"	"	"
"	"	"	89			5.0 V					"	IN				5.0 V	"		"	$1C_3$ to 1W	"	"	"
"	"	"	90		OUT	GND	IN				"					GND			"	$2C_0$ to 2W	"	"	"
"	"	"	91		"	GND		IN			"					5.0 V			"	$2C_1$ to 2W	"	"	"
"	"	"	92		"	5.0 V			IN	IN	"					GND			"	$2C_2$ to 2W	"	"	"
"	"	"	93		"	5.0 V					"					5.0 V			"	$2C_3$ to 2W	"	"	"
"	t_{PHL3}	"	94			GND					"			5.0 V	GND	IN		OUT	"	A to 1Y	6	37	ns
"	"	"	95	OUT		GND	GND	5.0 V			"					IN			"	A to 2Y	"	"	"
"	"	"	96			IN					"		5.0 V		GND	GND		OUT	"	B to 1Y	"	"	"
"	"	"	97	OUT		IN	GND		5.0 V		"					GND			"	B to 2Y	"	"	"
"	t_{PLH3}	"	98			GND					"			5.0 V	GND	IN		OUT	"	A to 1Y	"	37	"
"	"	"	99	OUT		GND	GND	5.0 V			"					IN			"	A to 2Y	"	"	"
"	"	"	100			IN					"		5.0 V		GND	GND		OUT	"	B to 1Y	"	"	"
"	"	"	101	OUT		IN	GND		5.0 V		"					GND			"	B to 2Y	"	"	"
"	t_{PHL4}	"	102			GND					"			5.0 V	GND	IN	OUT		"	A to 1W	"	28	"
"	"	"	103		OUT	GND	GND	5.0 V			"					IN			"	A to 2W	"	"	"
"	"	"	104			IN					"		5.0 V		GND	GND	OUT		"	B to 1W	"	"	"
"	"	"	105		OUT	IN	GND		5.0 V		"					GND			"	B to 2W	"	"	"

See note at end of device type 04.

TABLE III. Group A inspection for device type 04 - Continued.

Terminal conditions (pins not designated may be H ≥ 2.0 V, or L ≤ 0.8 V, or open).

Subgroup	Symbol	MIL-STD-883 method	Cases E, F	1	2	3	4	5	6	7	8	9	10	11	12	13	14	15	16	Meas. terminal	Test limits		
			Test No.	2Y	2W	B	$2C_0$	$2C_1$	$2C_2$	$2C_3$	GND	$1C_3$	$1C_2$	$1C_1$	$1C_0$	A	1W	1Y	V_{CC}		Min	Max	Unit
9	t_{PLH4}	3003	106			GND					GND			5.0 V	GND	IN	OUT		5.0 V	A to 1W	6	26	ns
T_C = 25°C	"	(Fig 5)	107		OUT	GND	GND	5.0 V			"					IN			"	A to 2W	"	"	"
"	"	"	108			IN					"		5.0 V		GND	GND	OUT		"	B to 1W	"	"	"
"	"	"	109		OUT	IN	GND		5.0 V		"					GND			"	B to 2W	"	"	"
10	t_{PHL1}	"	110			GND					"				IN	GND		OUT	"	$1C_0$ to 1Y	3	41	"
T_C = 125°C	"	"	111			GND					"			IN		5.0 V		"	"	$1C_1$ to 1Y	"	"	"
"	"	"	112			5.0 V					"		IN			GND		"	"	$1C_2$ to 1Y	"	"	"
"	"	"	113			5.0 V					"	IN				5.0 V		"	"	$1C_3$ to 1Y	"	"	"
"	"	"	114	OUT		GND	IN				"					GND			"	$2C_0$ to 2Y	"	"	"
"	"	"	115	"		GND		IN			"					5.0 V			"	$2C_1$ to 2Y	"	"	"
"	"	"	116	"		5.0 V			IN		"					GND			"	$2C_2$ to 2Y	"	"	"
"	"	"	117	"		5.0 V				IN	"					5.0 V			"	$2C_3$ to 2Y	"	"	"
"	t_{PLH1}	"	118			GND					"				IN	GND		OUT	"	$1C_0$ to 1Y	"	39	"
"	"	"	119			GND					"			IN		5.0 V		"	"	$1C_1$ to 1Y	"	"	"
"	"	"	120			5.0 V					"		IN			GND		"	"	$1C_2$ to 1Y	"	"	"
"	"	"	121			5.0 V					"	IN				5.0 V		"	"	$1C_3$ to 1Y	"	"	"
"	"	"	122	OUT		GND	IN				"					GND			"	$2C_0$ to 2Y	"	"	"
"	"	"	123	"		GND		IN			"					5.0 V			"	$2C_1$ to 2Y	"	"	"
"	"	"	124	"		5.0 V			IN		"					GND			"	$2C_2$ to 2Y	"	"	"
"	"	"	125	"		5.0 V				IN	"					5.0 V			"	$2C_3$ to 2Y	"	"	"
"	t_{PHL2}	"	126			GND					"				IN	GND	OUT		"	$1C_0$ to 1W	"	25	"
"	"	"	127			GND					"			IN		5.0 V	"		"	$1C_1$ to 1W	"	"	"
"	"	"	128			5.0 V					"		IN			GND	"		"	$1C_2$ to 1W	"	"	"
"	"	"	129			5.0 V					"	IN				5.0 V	"		"	$1C_3$ to 1W	"	"	"
"	"	"	130		OUT	GND	IN				"					GND			"	$2C_0$ to 2W	"	"	"
"	"	"	131		"	GND		IN			"					5.0 V			"	$2C_1$ to 2W	"	"	"
"	"	"	132		"	5.0 V			IN		"					GND			"	$2C_2$ to 2W	"	"	"
"	"	"	133		"	5.0 V				IN	"					5.0 V			"	$2C_3$ to 2W	"	"	"
"	t_{PLH2}	"	134			GND					"				IN	GND	OUT		"	$1C_0$ to 1W	"	24	"
"	"	"	135			GND					"			IN		5.0 V	"		"	$1C_1$ to 1W	"	"	"
"	"	"	136			5.0 V					"		IN			GND	"		"	$1C_2$ to 1W	"	"	"
"	"	"	137			5.0 V					"	IN				5.0 V	"		"	$1C_3$ to 1W	"	"	"
"	"	"	138		OUT	GND	IN				"					GND			"	$2C_0$ to 2W	"	"	"
"	"	"	139		"	GND		IN			"					5.0 V			"	$2C_1$ to 2W	"	"	"
"	"	"	140		"	5.0 V			IN		"					GND			"	$2C_2$ to 2W	"	"	"
"	"	"	141		"	5.0 V				IN	"					5.0 V			"	$2C_3$ to 2W	"	"	"

See note at end of device type 04.

TABLE III. Group A inspection for device type 04 - Continued.
Terminal conditions (pins not designated may be H ≥ 2.0 V, or L ≤ 0.8 V, or open).

Subgroup	Symbol	MIL-STD-883 method	Cases E, F	1	2	3	4	5	6	7	8	9	10	11	12	13	14	15	16	Meas. terminal	Test limits		
			Test No.	2Y	2W	B	$2C_0$	$2C_1$	$2C_2$	$2C_3$	GND	$1C_3$	$1C_2$	$1C_1$	$1C_0$	A	1W	1Y	V_{CC}		Min	Max	Unit
10	t_{PHL3}	3003	142			GND					GND			5.0 V	GND	IN		OUT	5.0 V	A to 1Y	6	51	ns
T_C = 125°C	"	(Fig 5)	143	OUT		GND	GND	5.0 V			"					IN			"	A to 2Y	"	"	"
"	"	"	144			IN					"		5.0 V		GND	GND		OUT	"	B to 1Y	"	"	"
"	"	"	145	OUT		IN	GND		5.0 V		"					GND			"	B to 2Y	"	"	"
"	t_{PLH3}	"	146			GND					"			5.0 V	GND	IN		OUT	"	A to 1Y	"	"	"
"	"	"	147	OUT		GND	GND	5.0 V			"					IN			"	A to 2Y	"	"	"
"	"	"	148			IN					"		5.0 V		GND	GND		OUT	"	B to 1Y	"	"	"
"	"	"	149	OUT		IN	GND		5.0 V		"					GND			"	B to 2Y	"	"	"
"	t_{PHL4}	"	150			GND					"			5.0 V	GND	IN	OUT		"	A to 1W	"	39	"
"	"	"	151		OUT	GND	GND	5.0 V			"					IN			"	A to 2W	"	"	"
"	"	"	152			IN					"		5.0 V		GND	GND	OUT		"	B to 1W	"	"	"
"	"	"	153		OUT	IN	GND		5.0 V		"					GND			"	B to 2W	"	"	"
"	t_{PLH4}	"	154			GND					"			5.0 V	GND	IN	OUT		"	A to 1W	"	34	"
"	"	"	155		OUT	GND	GND	5.0 V			"					IN			"	A to 2W	"	"	"
"	"	"	156			IN					"		5.0 V		GND	GND	OUT		"	B to 1W	"	"	"
"	"	"	157		OUT	IN	GND		5.0 V		"					GND			"	B to 2W	"	"	"
11	Same tests, terminal conditions and limits as subgroup 10, except T_C = -55°C.																						

1/ A = 3.0 V minimum, B = 0.0 V or GND.
2/ H > 1.5 V; L < 1.5 V.
Only attributes data is required for subgroups 7 and 8.

TABLE III. Group A inspection for device type 05.

Terminal conditions (pins not designated may be H ≥ 2.0 V, or L ≤ 0.8 V, or open).

Subgroup	Symbol	MIL-STD-883 method	Cases E, F	1	2	3	4	5	6	7	8	9	10	11	12	13	14	15	16	Meas. terminal	Test limits		
			Test No.	A	$1B_0$	$1B_1$	1Y	$2B_0$	$2B_1$	2Y	GND	4Y	$4B_1$	$4B_0$	3Y	$3B_1$	$3B_0$	G	V_{CC}		Min	Max	Unit
1	V_{OH}	3006	1	2.0 V		2.0 V	-.8 mA				GND							0.8 V	4.5 V	1Y	2.4		V
T_C = 25°C	“	“	2	“					2.0 V	-.8 mA	“							“	“	2Y	“		“
“	“	“	3	“							“				-.8 mA	2.0 V		“	“	3Y	“		“
“	“	“	4	“							“	-.8 mA	2.0 V					“	“	4Y	“		“
“	V_{OL}	3007	5				16 mA				“							2.0 V	“	1Y		0.4	“
“	“	“	6							16 mA	“							“	“	2Y		“	“
“	“	“	7								“				16 mA			“	“	3Y		“	“
“	“	“	8								“	16 mA						“	“	4Y		“	“
“	V_{IC}		9	-12 mA							“								“	A		-1.5	“
“	“		10		-12 mA						“								“	$1B_0$		“	“
“	“		11			-12 mA					“								“	$1B_1$		“	“
“	“		12					-12 mA			“								“	$2B_0$		“	“
“	“		13						-12 mA		“								“	$2B_1$		“	“
“	“		14								“		-12 mA						“	$4B_1$		“	“
“	“		15								“			-12 mA					“	$4B_0$		“	“
“	“		16								“					-12 mA			“	$3B_1$		“	“
“	“		17								“						-12 mA		“	$3B_0$		“	“
“	“		18								“							-12 mA	“	G		“	“
“	I_{IL}	3009	19								“							0.4 V	5.5 V	G	-0.7	-1.6	mA
“	“	“	20	0.4 V							“							GND	“	A	“	“	“
“	“	“	21	GND	0.4 V						“							“	“	$1B_0$	“	“	“
“	“	“	22	5.5 V		0.4 V					“							“	“	$1B_1$	“	“	“
“	“	“	23	GND				0.4 V			“							“	“	$2B_0$	“	“	“
“	“	“	24	5.5 V					0.4 V		“							“	“	$2B_1$	“	“	“
“	“	“	25	5.5 V							“		0.4 V					“	“	$4B_1$	“	“	“
“	“	“	26	GND							“			0.4 V				“	“	$4B_0$	“	“	“
“	“	“	27	5.5 V							“					0.4 V		“	“	$3B_1$	“	“	“
“	“	“	28	GND							“						0.4 V	“	“	$3B_0$	“	“	“
“	I_{IH1}	3010	29								“							2.4 V	“	G		40	µA
“	“	“	30	2.4 V							“							5.5 V	“	A		“	“
“	“	“	31	5.5 V	2.4 V						“							“	“	$1B_0$		“	“
“	“	“	32	GND			2.4 V				“							“	“	$1B_1$		“	“
“	“	“	33	5.5 V				2.4 V			“							“	“	$2B_0$		“	“
“	“	“	34	GND					2.4 V		“							“	“	$2B_1$		“	“
“	“	“	35	GND							“		2.4 V					“	“	$4B_1$		“	“
“	“	“	36	5.5 V							“			2.4 V				“	“	$4B_0$		“	“
“	“	“	37	GND							“					2.4 V		“	“	$3B_1$		“	“
“	“	“	38	5.5 V							“						2.4 V	“	“	$3B_0$		“	“

See notes at end of device type 05.

TABLE III. Group A inspection for device type 05 – Continued.
Terminal conditions (pins not designated may be H ≥ 2.0 V, or L ≤ 0.8 V, or open).

Subgroup	Symbol	MIL-STD-883 method	Cases E, F	1	2	3	4	5	6	7	8	9	10	11	12	13	14	15	16	Meas. terminal	Test limits		
			Test No.	A	$1B_0$	$1B_1$	1Y	$2B_0$	$2B_1$	2Y	GND	4Y	$4B_1$	$4B_0$	3Y	$3B_1$	$3B_0$	G	V_{CC}		Min	Max	Unit
1	I_{IH2}	3010	39								GND							5.5 V	5.5 V	G		100	µA
T_C = 25°C	"	"	40	5.5 V							"							"	"	A		"	"
"	"	"	41	5.5 V	5.5 V						"							"	"	$1B_0$		"	"
"	"	"	42	GND		5.5 V					"							"	"	$1B_1$		"	"
"	"	"	43	5.5 V				5.5 V			"							"	"	$2B_0$		"	"
"	"	"	44	GND					5.5 V		"							"	"	$2B_1$		"	"
"	"	"	45	GND							"		5.5 V					"	"	$4B_1$		"	"
"	"	"	46	5.5 V							"			5.5 V				"	"	$4B_0$		"	"
"	"	"	47	GND							"					5.5 V		"	"	$3B_1$		"	"
"	"	"	48	5.5 V							"						5.5 V	"	"	$3B_0$		"	"
"	I_{OS}	3011	49	5.5 V	5.5 V	5.5 V	GND				"							GND	"	1Y	-20	-120	mA
"	"	"	50	"				5.5 V	5.5 V	GND	"							"	"	2Y	"	"	"
"	"	"	51	"							"	GND	5.5 V	5.5 V				"	"	4Y	"	"	"
"	"	"	52	"							"				GND	5.5 V	5.5 V	"	"	3Y	"	"	"
"	I_{CC}	3005	53	GND	GND	GND		GND	GND		"		GND	GND		GND	GND	GND	"	V_{CC}		50	"
2	Same tests, terminal conditions and limits as subgroup 1, except T_C = 125°C and V_{IC} tests are omitted.																						
3	Same tests, terminal conditions and limits as subgroup 1, except T_C = -55°C and V_{IC} tests are omitted.																						
7	Truth		54				L 2/			L	GND	L			L			A	4.5 V				
T_C = 25°C	table		55	A 1/		B	L		B	L	"	L	B		L	B		B	"				
"	test		56	A		A	H		A	H	"	H	A		H	A		"	"		2/		
"	"		57	B	B		L	B		L	"	L		B	L		B	"	"				
"	"		58	B	A		H	A		H	"	H		A	H		A	"	"				
8	Repeat subgroup 7 at T_C = 125°C and T_C = -55°C.																						
9	t_{PHL1}	3003	59	IN	GND	5.0 V	OUT				GND							GND	5.0 V	A to 1Y	6	30	ns
T_C = 25°C	"	(Fig 6)	60	"				GND	5.0 V	OUT	"							"	"	A to 2Y	"	"	"
"	"	"	61	"							"				OUT	5.0 V	GND	"	"	A to 3Y	"	"	"
"	"	"	62	"							"	OUT	5.0 V	GND				"	"	A to 4Y	"	"	"
"	t_{PLH1}	"	63	"	GND	5.0 V	OUT				"							"	"	A to 1Y	"	27	"
"	"	"	64	"				GND	5.0 V	OUT	"							"	"	A to 2Y	"	"	"
"	"	"	65	"							"				OUT	5.0 V	GND	"	"	A to 3Y	"	"	"
"	"	"	66	"							"	OUT	5.0 V	GND				"	"	A to 4Y	"	"	"

See notes at end of device type 05.

TABLE III. Group A inspection for device type 05 – Continued.
Terminal conditions (pins not designated may be H ≥ 2.0 V, or L ≤ 0.8 V, or open).

Subgroup	Symbol	MIL-STD-883 method	Cases E, F	1	2	3	4	5	6	7	8	9	10	11	12	13	14	15	16	Meas. terminal	Test limits		
			Test No.	A	$1B_0$	$1B_1$	1Y	$2B_0$	$2B_1$	2Y	GND	4Y	$4B_1$	$4B_0$	3Y	$3B_1$	$3B_0$	G	V_{CC}		Min	Max	Unit
9	t_{PHL2}	3003	67	5.0 V		5.0 V	OUT				GND							IN	5.0 V	G to 1Y	3	28	ns
T_C = 25°C	"	(Fig 6)	68	“					5.0 V	OUT	“							“	“	G to 2Y	“	“	“
“	“	“	69	“							“				OUT	5.0 V		“	“	G to 3Y	“	“	“
“	“	“	70	“							“	OUT	5.0 V					“	“	G to 4Y	“	“	“
“	t_{PLH2}	“	71	“		5.0 V	OUT				“							“	“	G to 1Y	“	23	“
“	“	“	72	“					5.0 V	OUT	“							“	“	G to 2Y	“	“	“
“	“	“	73	“							“				OUT	5.0 V		“	“	G to 3Y	“	“	“
“	“	“	74	“							“	OUT	5.0 V					“	“	G to 4Y	“	“	“
“	t_{PHL3}	“	75	GND	IN		OUT				“							GND	“	$1B_0$ to 1Y	“	20	“
“	“	“	76	5.0 V		IN	OUT				“							“	“	$1B_1$ to 1Y	“	“	“
“	“	“	77	GND				IN		OUT	“							“	“	$2B_0$ to 2Y	“	“	“
“	“	“	78	5.0 V					IN	OUT	“							“	“	$2B_1$ to 2Y	“	“	“
“	“	“	79	GND							“				OUT		IN	“	“	$3B_0$ to 3Y	“	“	“
“	“	“	80	5.0 V							“				OUT	IN		“	“	$3B_1$ to 3Y	“	“	“
“	“	“	81	GND							“	OUT		IN				“	“	$4B_0$ to 4Y	“	“	“
“	“	“	82	5.0 V							“	OUT	IN					“	“	$4B_1$ to 4Y	“	“	“
“	t_{PLH3}	“	83	GND	IN		OUT				“							“	“	$1B_0$ to 1Y	“	20	“
“	“	“	84	5.0 V		IN	OUT				“							“	“	$1B_1$ to 1Y	“	“	“
“	“	“	85	GND				IN		OUT	“							“	“	$2B_0$ to 2Y	“	“	“
“	“	“	86	5.0 V					IN	OUT	“							“	“	$2B_1$ to 2Y	“	“	“
“	“	“	87	GND							“				OUT		IN	“	“	$3B_0$ to 3Y	“	“	“
“	“	“	88	5.0 V							“				OUT	IN		“	“	$3B_1$ to 3Y	“	“	“
“	“	“	89	GND							“	OUT		IN				“	“	$4B_0$ to 4Y	“	“	“
“	“	“	90	5.0 V							“	OUT	IN					“	“	$4B_1$ to 4Y	“	“	“
10	t_{PHL1}	3003	91	IN	GND	5.0 V	OUT				“							“	“	A to1Y	6	49	“
T_C = 125°C	“	(Fig 6)	92	“				GND	5.0 V	OUT	“							“	“	A to 2Y	“	“	“
“	“	“	93	“							“				OUT	5.0 V	GND	“	“	A to 3Y	“	“	“
“	“	“	94	“							“	OUT	5.0 V	GND				“	“	A to 4Y	“	“	“
“	t_{PLH1}	“	95	“	GND	5.0 V	OUT				“							“	“	A to1Y	“	41	“
“	“	“	96	“				GND	5.0 V	OUT	“							“	“	A to 2Y	“	“	“
“	“	“	97	“							“				OUT	5.0 V	GND	“	“	A to 3Y	“	“	“
“	“	“	98	“							“	OUT	5.0 V	GND				“	“	A to 4Y	“	“	“
“	t_{PHL2}	“	99	5.0 V		5.0 V	OUT				“							IN	“	G to 1Y	3	39	“
“	“	“	100	“					5.0 V	OUT	“							“	“	G to 2Y	“	“	“
“	“	“	101	“							“				OUT	5.0 V		“	“	G to 3Y	“	“	“
“	“	“	102	“							“	OUT	5.0 V					“	“	G to 4Y	“	“	“

See notes at end of device type 05.

TABLE III. Group A inspection for device type 05 – Continued.
Terminal conditions (pins not designated may be H ≥ 2.0 V, or L ≤ 0.8 V, or open).

Subgroup	Symbol	MIL-STD-883 method	Cases E, F	1	2	3	4	5	6	7	8	9	10	11	12	13	14	15	16	Meas. terminal	Test limits		
			Test No.	A	$1B_0$	$1B_1$	1Y	$2B_0$	$2B_1$	2Y	GND	4Y	$4B_1$	$4B_0$	3Y	$3B_1$	$3B_0$	G	V_{CC}		Min	Max	Unit
10	t_{PLH2}	3003	103	5.0 V		5.0 V	OUT				GND							IN	5.0 V	G to 1Y	3	33	ns
T_C = 125°C	“	(Fig 6)	104	“					5.0 V	OUT	“							“	“	G to 2Y	“	“	“
“	“	“	105	“							“				OUT	5.0 V		“	“	G to 3Y	“	“	“
“	“	“	106	“							“	OUT	5.0 V					“	“	G to 4Y	“	“	“
“	t_{PHL3}	“	107	GND	IN		OUT				“							GND	“	$1B_0$ to 1Y	“	25	“
“	“	“	108	5.0 V		IN	OUT				“							“	“	$1B_1$ to 1Y	“	“	“
“	“	“	109	GND				IN		OUT	“							“	“	$2B_0$ to 2Y	“	“	“
“	“	“	110	5.0 V					IN	OUT	“							“	“	$2B_1$ to 2Y	“	“	“
“	“	“	111	GND							“				OUT		IN	“	“	$3B_0$ to 3Y	“	“	“
“	“	“	112	5.0 V							“				OUT	IN		“	“	$3B_1$ to 3Y	“	“	“
“	“	“	113	GND							“	OUT		IN				“	“	$4B_0$ to 4Y	“	“	“
“	“	“	114	5.0 V							“	OUT	IN					“	“	$4B_1$ to 4Y	“	“	“
"	t_{PLH3}	"	115	GND	IN		OUT				"							"	"	$1B_0$ to 1Y	"	35	"
"	“	"	116	5.0 V		IN	OUT				“							“	“	$1B_1$ to 1Y	“	“	“
“	“	“	117	GND				IN		OUT	“							“	“	$2B_0$ to 2Y	“	“	“
“	“	“	118	5.0 V					IN	OUT	“							“	“	$2B_1$ to 2Y	“	“	“
“	“	“	119	GND							“				OUT		IN	“	“	$3B_0$ to 3Y	“	“	“
“	“	“	120	5.0 V							“				OUT	IN		“	“	$3B_1$ to 3Y	“	“	“
“	“	“	121	GND							“	OUT		IN				“	“	$4B_0$ to 4Y	“	“	“
“	“	“	122	5.0 V							“	OUT	IN					“	“	$4B_1$ to 4Y	“	“	“
11	Same tests, terminal conditions and limits as subgroup 10, except T_C = -55°C.																						

1/ A = 3.0 V minimum, B = 0.0 V or GND.
2/ H > 1.5 V; L < 1.5 V.
Only attributes data is required for subgroups 7 and 8.

TABLE III. Group A inspection for device type 06.
Terminal conditions (pins not designated may be H ≥ 2.0 V, or L ≤ 0.8 V, or open).

Subgroup	Symbol	MIL-STD-883 method	Cases E, F	1	2	3	4	5	6	7	8	9	10	11	12	13	14	15	16	Meas. terminal	Test limits		
			Test No.	D_3	D_2	D_1	D_0	Y	W	G	GND	C	B	A	D_7	D_6	D_5	D_4	V_{CC}		Min	Max	Unit
1	V_{OH}	3006	1				2.0 V	-0.8 mA		0.8 V	GND	0.8 V	0.8 V	0.8 V					4.5 V	Y	2.4		V
T_C = 25°C	V_{OH}	3006	2						-0.8 mA	2.0 V	"	2.0 V	2.0 V	2.0 V					"	W	2.4		"
"	V_{OL}	3007	3					16 mA		2.0 V	"	2.0 V	2.0 V	2.0 V					"	Y		0.4	"
"	V_{OL}	3007	4				2.0 V		16 mA	0.8 V	"	0.8 V	0.8 V	0.8 V					"	W		0.4	"
"	V_{IC}		5				-12 mA				"								"	D_0		-1.5	"
"	"		6			-12 mA					"								"	D_1		"	"
"	"		7		-12 mA						"								"	D_2		"	"
"	"		8	-12 mA							"								"	D_3		"	"
"	"		9								"							-12 mA	"	D_4		"	"
"	"		10								"						-12 mA		"	D_5		"	"
"	"		11								"					-12 mA			"	D_6		"	"
"	"		12								"				-12 mA				"	D_7		"	"
"	"		13							-12 mA	"								"	G		"	"
"	"		14								"			-12 mA					"	A		"	"
"	"		15								"		-12 mA						"	B		"	"
"	"		16								"	-12 mA							"	C		"	"
"	I_{IL}	3009	17							0.4 V	"	5.5 V	5.5 V	5.5 V					5.5 V	G	-0.7	-1.6	mA
"	"	"	18							GND	"	5.5 V	5.5 V	0.4 V					"	A	"	"	"
"	"	"	19							"	"	5.5 V	0.4 V	5.5 V					"	B	"	"	"
"	"	"	20							"	"	0.4 V	5.5 V	5.5 V					"	C	"	"	"
"	"	"	21				0.4 V			"	"	GND	GND	GND					"	D_0	"	"	"
"	"	"	22			0.4 V				"	"	"	GND	5.5 V					"	D_1	"	"	"
"	"	"	23		0.4 V					"	"	"	5.5 V	GND					"	D_2	"	"	"
"	"	"	24	0.4 V						"	"	"	5.5 V	5.5 V					"	D_3	"	"	"
"	"	"	25							"	"	5.5 V	GND	GND				0.4 V	"	D_4	"	"	"
"	"	"	26							"	"	"	GND	5.5 V			0.4 V		"	D_5	"	"	"
"	"	"	27							"	"	"	5.5 V	GND		0.4 V			"	D_6	"	"	"
"	"	"	28							"	"	"	5.5 V	5.5 V	0.4 V				"	D_7	"	"	"
"	I_{IH1}	3010	29							2.4 V	"	GND	GND	GND					"	G		40	μA
"	"	"	30							5.5 V	"	GND	GND	2.4 V					"	A		"	"
"	"	"	31							"	"	GND	2.4 V	GND					"	B		"	"
"	"	"	32							"	"	2.4 V	GND	GND					"	C		"	"
"	"	"	33				2.4 V			"	"	5.5 V	5.5 V	5.5 V					"	D_0		"	"
"	"	"	34			2.4 V				"	"	"	5.5 V	GND					"	D_1		"	"
"	"	"	35		2.4 V					"	"	"	GND	5.5 V					"	D_2		"	"
"	"	"	36	2.4 V						"	"	"	GND	GND				2.4 V	"	D_3		"	"
"	"	"	37							"	"	GND	5.5 V	5.5 V					"	D_4		"	"
"	"	"	38							"	"	"	5.5 V	GND			2.4 V		"	D_5		"	"
"	"	"	39							"	"	"	GND	5.5 V		2.4 V			"	D_6		"	"
"	"	"	40							"	"	"	"	GND	2.4 V				"	D_7		"	"

See note at end of device type 06.

TABLE III. Group A inspection for device type 06 - Continued.
Terminal conditions (pins not designated may be H ≥ 2.0 V, or L ≤ 0.8 V, or open).

Subgroup	Symbol	MIL-STD-883 method	Cases E, F	1	2	3	4	5	6	7	8	9	10	11	12	13	14	15	16	Meas. terminal	Test limits		
			Test No.	D_3	D_2	D_1	D_0	Y	W	G	GND	C	B	A	D_7	D_6	D_5	D_4	V_{CC}		Min	Max	Unit
1	I_{IH2}	3010	41							5.5 V	GND	GND	GND	GND					5.5 V	G		100	µA
T_C = 25°C	"	"	42							"	"	"	GND	5.5 V					"	A		"	"
"	"	"	43							"	"	"	5.5 V	GND					"	B		"	"
"	"	"	44							"	"	5.5 V	GND	GND					"	C		"	"
"	"	"	45				5.5 V			"	"	"	5.5 V	5.5 V					"	D_0		"	"
"	"	"	46			5.5 V				"	"	"	5.5 V	GND					"	D_1		"	"
"	"	"	47		5.5 V					"	"	"	GND	5.5 V					"	D_2		"	"
"	"	"	48	5.5 V						"	"	"	GND	GND					"	D_3		"	"
"	"	"	49							"	"	GND	5.5 V	5.5 V				5.5 V	"	D_4		"	"
"	"	"	50							"	"	"	5.5 V	GND			5.5 V		"	D_5		"	"
"	"	"	51							"	"	"	GND	5.5 V		5.5 V			"	D_6		"	"
"	"	"	52							"	"	"	"	GND	5.5 V				"	D_7		"	"
"	I_{OS}	3011	53	GND	GND	GND	GND		GND	"	"	"	"	"	GND	GND	GND	GND	"	W	-20	-55	mA
"	I_{OS}	3011	54	"	"	"	5.5 V	GND		GND	"	"	"	"	"	"	"	"	"	Y	-20	-55	mA
"	I_{CC}	3005	55	"	"	"	5.5 V			GND	"	"	"	"	"	"	"	"	"	V_{CC}		48	mA
2	Same tests, terminal conditions and limits as subgroup 1, except T_C = 125°C and V_{IC} tests are omitted.																						
3	Same tests, terminal conditions and limits as subgroup 1, except T_C = -55°C and V_{IC} tests are omitted.																						
7	Truth		56				1/	L 2/	H	A	GND								4.5 V				
T_C = 25°C	table		57				B	L	H	B	"	B	B	B					"				
"	test		58				A	H	L	"	"	"	"	B					"				
"	"		59			B		L	H	"	"	"	"	A					"				
"	"		60			A		H	L	"	"	"	"	A					"				
"	"		61		B			L	H	"	"	"	A	B					"				
"	"		62		A			H	L	"	"	"	"	B					"				
"	"		63	B				L	H	"	"	"	"	A					"				
"	"		64	A				H	L	"	"	"	"	A					"		2/		
"	"		65					L	H	"	"	A	B	B				B	"				
"	"		66					H	L	"	"	"	"	B				A	"				
"	"		67					L	H	"	"	"	"	A			B		"				
"	"		68					H	L	"	"	"	"	A			A		"				
"	"		69					L	H	"	"	"	A	B		B			"				
"	"		70					H	L	"	"	"	"	B		A			"				
"	"		71					L	H	"	"	"	"	A	B				"				
"	"		72					H	L	"	"	"	"	A	A				"				
8	Repeat subgroup 7 at T_C = 125°C and T_C = -55°C.																						

See notes at end of device type 06.

TABLE III. Group A inspection for device type 06 - Continued.
Terminal conditions (pins not designated may be H ≥ 2.0 V, or L ≤ 0.8 V, or open).

Subgroup	Symbol	MIL-STD-883 method	Cases E, F	1	2	3	4	5	6	7	8	9	10	11	12	13	14	15	16	Meas. terminal	Test limits		
			Test No.	D_3	D_2	D_1	D_0	Y	W	G	GND	C	B	A	D_7	D_6	D_5	D_4	V_{CC}		Min	Max	Unit
9	t_{PHL1}	3003	73			5.0 V	GND		OUT	GND	GND	GND	GND	IN					5.0 V	A to W	6	32	ns
T_C = 25°C	"	(Fig 4)	74		5.0 V		"		"	"	"	GND	IN	GND					"	B to W	"	"	"
"	"	"	75				"		"	"	"	IN	GND	GND				5.0 V	"	C to W	"	"	"
"	t_{PLH1}	"	76			5.0 V	"		"	"	"	GND	GND	IN					"	A to W	"	29	"
"	"	"	77		5.0 V		"		"	"	"	GND	IN	GND					"	B to W	"	"	"
"	"	"	78				"		"	"	"	IN	GND	GND				5.0 V	"	C to W	"	"	"
"	t_{PHL2}	"	79			5.0 V	"	OUT		"	"	GND	GND	IN					"	A to Y	8	40	"
"	"	"	80		5.0 V		"	"		"	"	GND	IN	GND					"	B to Y	"	"	"
"	"	"	81				"	"		"	"	IN	GND	GND				5.0 V	"	C to Y	"	"	"
"	t_{PLH2}	"	82			5.0 V	"	"		"	"	GND	GND	IN					"	A to Y	"	39	"
"	"	"	83		5.0 V		"	"		"	"	GND	IN	GND					"	B to Y	"	"	"
"	"	"	84				"	"		"	"	IN	GND	"				5.0 V	"	C to Y	"	"	"
"	t_{PHL3}	"	85				5.0 V		OUT	IN	"	GND	"	"					"	G to W	6	28	"
"	t_{PLH3}	"	86				"		OUT	"	"	"	"	"					"	G to W	6	26	"
"	t_{PHL4}	"	87				"	OUT		"	"	"	"	"					"	G to Y	8	37	"
"	t_{PLH4}	"	88				"	OUT		"	"	"	"	"					"	G to Y	8	35	"
"	t_{PHL5}	"	89				IN		OUT	GND	"	"	"	"					"	D_0 to W	3	20	"
"	"	"	90			IN			"	"	"	"	"	5.0 V					"	D_1 to W	"	"	"
"	"	"	91		IN				"	"	"	"	5.0 V	GND					"	D_2 to W	"	"	"
"	"	"	92	IN					"	"	"	"	5.0 V	5.0 V					"	D_3 to W	"	"	"
"	t_{PHL5}	"	93						OUT	GND	"	5.0 V	GND	GND				IN	"	D_4 to W	"	"	"
"	"	"	94						"	"	"	"	GND	5.0 V			IN		"	D_5 to W	"	"	"
"	"	"	95						"	"	"	"	5.0 V	GND		IN			"	D_6 to W	"	"	"
"	"	"	96						"	"	"	"	5.0 V	5.0 V	IN				"	D_7 to W	"	"	"
"	t_{PLH5}	"	97				IN		"	"	"	GND	GND	GND					"	D_0 to W	"	17	"
"	"	"	98			IN			"	"	"	"	GND	5.0 V					"	D_1 to W	"	"	"
"	"	"	99		IN				"	"	"	"	5.0 V	GND					"	D_2 to W	"	"	"
"	"	"	100	IN					"	"	"	"	5.0 V	5.0 V					"	D_3 to W	"	"	"
"	"	"	101						"	"	"	5.0 V	GND	GND				IN	"	D_4 to W	"	"	"
"	"	"	102						"	"	"	"	GND	5.0 V			IN		"	D_5 to W	"	"	"
"	"	"	103						"	"	"	"	5.0 V	GND		IN			"	D_6 to W	"	"	"
"	"	"	104						"	"	"	"	5.0 V	5.0 V	IN				"	D_7 to W	"	"	"

See notes at end of device type 06.

TABLE III. Group A inspection for device type 06 - Continued.
Terminal conditions (pins not designated may be H ≥ 2.0 V, or L ≤ 0.8 V, or open).

Subgroup	Symbol	MIL-STD-883 method	Cases E, F	1	2	3	4	5	6	7	8	9	10	11	12	13	14	15	16	Meas. terminal	Test limits		
			Test No.	D_3	D_2	D_1	D_0	Y	W	G	GND	C	B	A	D_7	D_6	D_5	D_4	V_{CC}		Min	Max	Unit
9	t_{PHL6}	3003	105				IN	OUT		GND	GND	GND	GND	GND					5.0 V	D_0 to Y	6	29	ns
T_C = 25°C	"	(Fig 4)	106			IN		"		"	"	"	GND	5.0 V					"	D_1 to Y	"	"	"
"	"	"	107		IN			"		"	"	"	5.0 V	GND					"	D_2 to Y	"	"	"
"	"	"	108	IN				"		"	"	"	5.0 V	5.0 V					"	D_3 to Y	"	"	"
"	"	"	109					"		"	"	5.0 V	GND	GND				IN	"	D_4 to Y	"	"	"
"	"	"	110					"		"	"	"	GND	5.0 V			IN		"	D_5 to Y	"	"	"
"	"	"	111					"		"	"	"	5.0 V	GND		IN			"	D_6 to Y	"	"	"
"	"	"	112					"		"	"	"	5.0 V	5.0 V	IN				"	D_7 to Y	"	"	"
"	t_{PLH6}	"	113				IN	"		"	"	GND	GND	GND					"	D_0 to Y	"	33	"
"	"	"	114			IN		"		"	"	"	GND	5.0 V					"	D_1 to Y	"	"	"
"	"	"	115		IN			"		"	"	"	5.0 V	GND					"	D_2 to Y	"	"	"
"	"	"	116	IN				"		"	"	"	5.0 V	5.0 V				IN	"	D_3 to Y	"	"	"
"	"	"	117					"		"	"	5.0 V	GND	GND			IN		"	D_4 to Y	"	"	"
"	"	"	118					"		"	"	"	GND	5.0 V					"	D_5 to Y	"	"	"
"	"	"	119					"		"	"	"	5.0 V	GND		IN			"	D_6 to Y	"	"	"
"	"	"	120					"		"	"	"	5.0 V	5.0 V	IN				"	D_7 to Y	"	"	"
10	t_{PHL1}	"	121			5.0 V	GND		OUT	"	"	GND	GND	IN					"	A to W	"	48	"
T_C = 125°C	"	"	122		5.0 V		"		"	"	"	GND	IN	GND					"	B to W	"	"	"
"	"	"	123				"		"	"	"	IN	GND	GND				5.0 V	"	C to W	"	"	"
"	t_{PLH1}	"	124			5.0 V	"		"	"	"	GND	GND	IN					"	A to W	"	43	"
"	"	"	125		5.0 V		"		"	"	"	GND	IN	GND					"	B to W	"	"	"
"	"	"	126				"		"	"	"	IN	GND	GND				5.0 V	"	C to W	"	"	"
"	t_{PHL2}	"	127			5.0 V	"	OUT		"	"	GND	GND	IN					"	A to Y	8	60	"
"	"	"	128		5.0 V		"	"		"	"	GND	IN	GND					"	B to Y	"	"	"
"	"	"	129				"	"		"	"	IN	GND	GND				5.0 V	"	C to Y	"	"	"
"	t_{PLH2}	"	130			5.0 V	"	"		"	"	GND	GND	IN					"	A to Y	"	58	"
"	"	"	131		5.0 V		"	"		"	"	GND	IN	GND					"	B to Y	"	"	"
"	"	"	132				"	"		"	"	IN	GND	"				5.0 V	"	C to Y	"	"	"
"	t_{PHL3}	"	133				5.0 V		OUT	IN	"	GND	"	"					"	G to W	6	38	"
"	t_{PLH3}	"	134				"		OUT	"	"	"	"	"					"	G to W	6	35	"
"	t_{PHL4}	"	135				"	OUT		"	"	"	"	"					"	G to Y	8	52	"
"	t_{PLH4}	"	136				"	OUT		"	"	"	"	"					"	G to Y	8	52	"
"	t_{PHL5}	"	137				IN		OUT	GND	"	"	"	"					"	D_0 to W	3	32	"
"	"	"	138			IN			"	"	"	"	"	5.0 V					"	D_1 to W	"	"	"
"	"	"	139		IN				"	"	"	"	5.0 V	GND					"	D_2 to W	"	"	"
"	"	"	140	IN					"	"	"	"	5.0 V	5.0 V					"	D_3 to W	"	"	"

See notes at end of device type 06.

TABLE III. Group A inspection for device type 06 - Continued.
Terminal conditions (pins not designated may be H ≥ 2.0 V, or L ≤ 0.8 V, or open).

Subgroup	Symbol	MIL-STD-883 method	Cases E, F	1	2	3	4	5	6	7	8	9	10	11	12	13	14	15	16	Meas. terminal	Test limits		
			Test No.	D_3	D_2	D_1	D_0	Y	W	G	GND	C	B	A	D_7	D_6	D_5	D_4	V_{CC}		Min	Max	Unit
10	t_{PHL5}	3003	141						OUT	GND	GND	5.0 V	GND	GND				IN	5.0 V	D_4 to W	3	32	ns
T_C = 125°C	"	(Fig 4)	142						"	"	"	"	GND	5.0 V			IN		"	D_5 to W	"	"	"
"	"	"	143						"	"	"	"	5.0 V	GND		IN			"	D_6 to W	"	"	"
"	"	"	144						"	"	"	"	5.0 V	5.0 V	IN				"	D_7 to W	"	"	"
"	t_{PLH5}	"	145				IN		"	"	"	GND	GND	GND					"	D_0 to W	"	26	"
"	"	"	146			IN			"	"	"	"	GND	5.0 V					"	D_1 to W	"	"	"
"	"	"	147		IN				"	"	"	"	5.0 V	GND					"	D_2 to W	"	"	"
"	"	"	148	IN					"	"	"	"	5.0 V	5.0 V					"	D_3 to W	"	"	"
"	"	"	149						"	"	"	5.0 V	GND	GND				IN	"	D_4 to W	"	"	"
"	"	"	150						"	"	"	"	GND	5.0 V			IN		"	D_5 to W	"	"	"
"	"	"	151						"	"	"	"	5.0 V	GND		IN			"	D_6 to W	"	"	"
"	"	"	152						"	"	"	"	5.0 V	5.0 V	IN				"	D_7 to W	"	"	"
"	t_{PHL6}	"	153				IN	OUT		"	"	GND	GND	GND					"	D_0 to Y	6	44	"
"	"	"	154			IN		"		"	"	"	GND	5.0 V					"	D_1 to Y	"	"	"
"	"	"	155		IN			"		"	"	"	5.0 V	GND					"	D_2 to Y	"	"	"
"	"	"	156	IN				"		"	"	"	5.0 V	5.0 V				IN	"	D_3 to Y	"	"	"
"	"	"	157					"		"	"	5.0 V	GND	GND					"	D_4 to Y	"	"	"
"	"	"	158					"		"	"	"	GND	5.0 V			IN		"	D_5 to Y	"	"	"
"	"	"	159					"		"	"	"	5.0 V	GND		IN			"	D_6 to Y	"	"	"
"	"	"	160					"		"	"	"	5.0 V	5.0 V	IN				"	D_7 to Y	"	"	"
"	t_{PLH6}	"	161				IN	"		"	"	GND	GND	GND					"	D_0 to Y	"	36	"
"	"	"	162			IN		"		"	"	"	GND	5.0 V					"	D_1 to Y	"	"	"
"	"	"	163		IN			"		"	"	"	5.0 V	GND					"	D_2 to Y	"	"	"
"	"	"	164	IN				"		"	"	"	5.0 V	5.0 V					"	D_3 to Y	"	"	"
"	"	"	165					"		"	"	5.0 V	GND	GND				IN	"	D_4 to Y	"	"	"
"	"	"	166					"		"	"	"	GND	5.0 V			IN		"	D_5 to Y	"	"	"
"	"	"	167					"		"	"	"	5.0 V	GND		IN			"	D_6 to Y	"	"	"
"	"	"	168					"		"	"	"	5.0 V	5.0 V	IN				"	D_7 to Y	"	"	"
11	Same tests, terminal conditions and limits as subgroup 10, except T_C = -55°C.																						

1/ A = 3.0 V minimum, B = 0.0 V or GND.
2/ H > 1.5 V; L < 1.5 V.
Only attributes data is required for subgroups 7 and 8.

5. PACKAGING

5.1 Packaging requirements. For acquisition purposes, the packaging requirements shall be as specified in the contract or order (see 6.2). When packaging of materiel is to be performed by DoD or in-house contractor personnel, these personnel need to contact the responsible packaging activity to ascertain packaging requirements. Packaging requirements are maintained by the Inventory Control Point's packaging activity within the Military Service or Defense Agency, or within the military service's system command. Packaging data retrieval is available from the managing Military Department's or Defense Agency's automated packaging files, CD-ROM products, or by contacting the responsible packaging activity.

6. NOTES

(This section contains information of a general or explanatory nature that may be helpful, but it not mandatory)

6.1 Intended use. Microcircuits conforming to this specification are intended for original equipment design applications and logistic support of existing equipment.

6.2 Acquisition requirements. Acquisition documents should specify the following:

a. Title, number, and date of the specification.
b. PIN and compliance identifier, if applicable (see 1.2).
c. Requirements for delivery of one copy of the conformance inspection data pertinent to the device inspection lot to be supplied with each shipment by the device manufacturer, if applicable.
d. Requirement for certificate of compliance, if applicable.
e. Requirements for notification of change of product or process to acquiring activity in addition to notification to the qualifying activity, if applicable.
f. Requirements for failure analysis (including required test condition of method 5003), corrective action and reporting of results, if applicable.
g. Requirements for product assurance options.
h. Requirements for carriers, special lead lengths or lead forming, if applicable. These requirements shall not affect the part number. Unless otherwise specified, these requirements will not apply to direct purchase by or direct shipment to the Government.
i. Requirements for "JAN" marking.
j. Packaging requirements (see 5.1).

6.3 Qualification. With respect to products requiring qualification, awards will be made only for products which are, at the time of award of contract, qualified for inclusion in Qualified Manufacturers List QML-38535 whether or not such products have actually been so listed by that date. The attention of the contractors is called to these requirements, and manufacturers are urged to arrange to have the products that they propose to offer to the Federal Government tested for qualification in order that they may be eligible to be awarded contracts or purchase orders for the products covered by this specification. Information pertaining to qualification of products may be obtained from DSCC-VQ, 3990 E. Broad Street, Columbus, Ohio 43123-1199.

6.4 Superseding information. The requirements of MIL-M-38510 have been superseded to take advantage of the available Qualified Manufacturer Listing (QML) system provided by MIL-PRF-38535. Previous references to MIL-M-38510 in this document have been replaced by appropriate references to MIL-PRF-38535. All technical requirements now consist of this specification and MIL-PRF-38535. The MIL-M-38510 specification sheet number and PIN have been retained to avoid adversely impacting existing government logistics systems and contractor's parts lists.

6.5 Abbreviations, symbols and definitions. The abbreviations, symbols, and definitions used herein are defined in MIL-PRF-38535 and MIL-HDBK-1331, and as follows:

GND ..... Ground zero voltage potential
V_{IN} ..... Voltage level at an input terminal
V_{IC} ..... Input clamp voltage
I_{IN} ..... Current-flowing into an input terminal

6.6 Logistic support. Lead materials and finishes (see 3.3) are interchangeable. Unless otherwise specified, microcircuits acquired for Government logistic support will be acquired to device class B (see 1.2.2), lead material and finish A (see 3.4). Longer lead lengths and lead forming shall not affect the part number.

6.7 Substitutability. The cross-reference information below is presented for the convenience of users. Microcircuits covered by this specification will functionally replace the listed generic-industry type. Generic-industry microcircuit types may not have equivalent operational performance characteristics across military temperature ranges or reliability factors equivalent to MIL-M-35810 device types and may have slight physical variations in relation to case size. The presence of this information should not be deemed as permitting substitution of generic-industry types for MIL-M-38510 types or as a waiver of any of the provisions of MIL-PRF-38535.

Military device type	Generic-industry type
01	54150
02	9312
03	54153
04	9309
05	9322, 54157
06	54151

6.8 Manufacturers designation. Manufacturer circuits included in this specification are designated as shown in table IV herein.

TABLE IV. Substitutability and manufacturers designator.

Device Types	Motorola	Signetics	Fairchild	Texas Instruments	National	Advanced Micro Device
	A	B	C	D	E	F
01	X	X			X	
02	X	X			X	X
03	X	X	X		X	
04	X	X	X		X	X
05	X	X	X	X	X	X
06	X	X	X	X	X	

6.9 Changes from previous issue. Marginal notations are not used in this revision to identify changes with respect to the previous issue due to the extensiveness of the changes.

Custodians:
Army - CR
Navy - EC
Air Force - 11
DLA - CC

Review activities:
Army - MI, SM
Navy - AS, CG, MC, SH, TD
Air Force - 03, 19, 99

Preparing activity:
DLA - CC

(Project 5962-2103)

NOTE: The activities listed above were interested in this document as of the date of this document. Since organizations and responsibilities can change, you should verify the currency of the information above using the ASSIST Online database at http://assist.daps.dla.mil.