INCH-POUND
MIL-M-38510/129B
06 December 2004
SUPERSEDING
MIL-M-38510/129A
06 December 1985

MILITARY SPECIFICATION

MICROCIRCUITS, MONOLITHIC SILICON INTERFACE, DUAL PERIPHERAL DRIVERS

Reactivated after 06 December 2004 and may be used for either new or existing design acquisition.

This specification is approved for use by all Departments and Agencies of the Department of Defense.

The requirements for acquiring the product herein shall consist of this specification sheet and MIL-PRF-38535.

1. SCOPE

1.1 Scope. This specification covers the detail requirements for bipolar, monolithic silicon, dual peripheral drivers. Two product assurance classes and a choice of case outlines and lead finishes are provided and are reflected in the complete part number. For this product, the requirements of MIL-M-38510 have been superseded by MIL-PRF-38535, (see 6.3)

1.2 Part or Identifying Number (PIN). The PIN is in accordance with MIL-PRF-38535, and as specified herein.

1.2.1 Device types. The device types are as follows:

Device types	Circuit
01	Dual NAND/AND gate and transistor (separate), high speed switching
02	Dual AND gate and transistor (connected), high speed switching
03	Dual NAND gate and transistor (connected), high speed switching
04	Dual OR gate and transistor (connected), high speed switching
05	Dual NOR gate and transistor (connected), high speed switching
06	High voltage dual NAND/AND gate and transistor (separate), medium speed switching
07	High voltage dual AND gate and transistor (connected), medium speed switching
08	High voltage dual NAND gate and transistor (connected), medium speed switching
09	High voltage dual OR gate and transistor (connected), medium speed switching
10	High voltage dual NOR gate and transistor (connected), medium speed switching

1.2.2 Device class. The device class is the product assurance level as defined in MIL-PRF-38535.

1.2.3 Case outline. The case outlines are as designated in MIL-STD-1835 and as follows:

Outline letter	Descriptive designator	Terminals	Package style
C	GDIP1-T14 or CDIP2-T14	14	Dual in line
P	GDIP1-T8 or CDIP2-T8	8	Dual in line

Comments, suggestions, or questions on this document should be addressed to: Commander, Defense Supply Center Columbus, ATTN: DSCC-VAS, 3990 East Broad St., Columbus, OH 43218-3990, or email Linear@dscc.dla.mil. Since contact information can change, you may want to verify the currency of this address information using the ASSIST Online database at http://assist.daps.dla.mil.

1.3 Absolute maximum ratings.

Supply voltage (V_{CC}) ..... 7 V dc
Input voltage (V_{IN}) ..... 5.5 V dc
Interemitter voltage (V_{EM}) ..... 5.5 V dc
V_{CC} to substrate voltage (V_{CCS}):
Device type 01 ..... 35 V dc
Device type 06 ..... 40 V dc
Collector to substrate voltage (V_{CS}):
Device type 01 ..... 35 V dc
Device type 06 ..... 40 V dc
Collector to base voltage (V_{EB}):
Device type 01 ..... 35 V dc
Device type 06 ..... 40 V dc
Collector to emitter voltage (V_{CER}):
Device type 01 ..... 30 V dc
Device type 06 ..... 40 V dc
Collector to emitter voltage (V_{CEO}):
Device type 06 ..... 25 V dc
Emitter to base voltage (V_{BE}):
Device types 01 and 06 ..... 5 V dc
Offstate output voltage (V_{OO}):
Device types 02 through 05 ..... 30 V dc
Device types 07 through 10 ..... 35 V dc
Continuous collector current (I_{CC}):
Device types 01 and 06 ..... 300 mA
Continuous output current (I_{OC}):
Device types 02 through 05 and 07 through 10 ..... 300 mA 1/
Peak collector current (I_{CP}):
Device types 01 and 06 ..... 500 mA
Peak output current (I_{OP}):
Device types 02 through 05 and 07 through 10 ..... 500 mA
Continuous total dissipation at 25°C ambient:
Device types 01 and 06 ..... 1375 mW
Device types 02 through 05 and 07 through 10 ..... 1050 mW
Ambient operating temperature range ..... -55°C to +125°C
Storage temperature range ..... -65°C to +150°C
Junction temperature (T_J) ..... +150°C
Lead temperature 1/16 inch from case, (soldering, 60 seconds) ..... 300°C

1.4 Recommended operating conditions.

Supply voltage range ..... +4.5 V to +5.5 V 2/
Ambient operating temperature range (T_A) ..... -55°C to +125°C

1/ Both halves of these dual circuits may conduct rated current simultaneously; however, power dissipation averaged over a short time interval must fall within the continuous power dissipation ratings.
2/ For device types 01 and 06 only, the substrate (pin 8) must always be at the most negative device voltage for proper operation.

1.5 Power and thermal characteristics.

Package	Case outline	Maximum allowable power dissipation	Maximum θ_{JC}	Maximum θ_{JA}
14 lead dual in line	C	275 mW at T_A = +125°C	29°C/W	91°C/W
8 lead dual in line	P	210 mW at T_A = +125°C	26°C/W	119°C/W

2. APPLICABLE DOCUMENTS

2.1 General. The documents listed in this section are specified in sections 3, 4, or 5 of this specification. This section does not include documents cited in other sections of this specification or recommended for additional information or as examples. While every effort has been made to ensure the completeness of this list, document users are cautioned that they must meet all specified requirements of documents cited in sections 3, 4, or 5 of this specification, whether or not they are listed.

2.2 Government documents.

2.2.1 Specifications, standards, and handbooks. The following specifications and standards form a part of this specification to the extent specified herein. Unless otherwise specified, the issues of these documents are those cited in the solicitation or contract.

DEPARTMENT OF DEFENSE SPECIFICATIONS

MIL-PRF-38535 - Integrated Circuits (Microcircuits) Manufacturing, General Specification for.

DEPARTMENT OF DEFENSE STANDARDS

MIL-STD-883 - Test Method Standard for Microelectronics.
MIL-STD-1835 - Interface Standard Electronic Component Case Outlines.

(Copies of these documents are available online at http://assist.daps.dla.mil/quicksearch/ or http://assist.daps.dla.mil or from the Standardization Document Order Desk, 700 Robbins Avenue, Building 4D, Philadelphia, PA 19111-5094.)

2.3 Order of precedence. In the event of a conflict between the text of this specification and the references cited herein the text of this document shall takes precedence. Nothing in this document, however, supersedes applicable laws and regulations unless a specific exemption has been obtained.

3. REQUIREMENTS

3.1 Qualification. Microcircuits furnished under this specification shall be products that are manufactured by a manufacturer authorized by the qualifying activity for listing on the applicable qualified manufacturers list before contract award (see 4.3 and 6.4).

3.2 Item requirements. The individual item requirements shall be in accordance with MIL-PRF-38535 and as specified herein or as modified in the device manufacturer's Quality Management (QM) plan. The modification in the QM plan shall not affect the form, fit, or function as described herein.

3.3 Design, construction, and physical dimensions. The design, construction, and physical dimensions shall be as specified in MIL-PRF-38535 and herein.

3.3.1 Logic diagrams and terminal connections. The logic diagrams and terminal connections shall be as specified on figure 1.

3.3.2 Truth tables. The truth tables shall be as specified on figure 2.

3.3.3 Schematic circuits. The schematic circuits shall be maintained by the manufacturer and made available to the qualifying activity and the preparing activity upon request.

3.3.4 Case outlines. The case outlines shall be as specified in 1.2.3.

3.3.5 Package and sealing material. Package and sealing material shall be in accordance with MIL-PRF-38535.

3.4 Lead material and finish. The lead material and finish shall be in accordance with MIL-PRF-38535 (see 6.6).

3.5 Electrical performance characteristics. The electrical performance characteristics are as specified in table I, and apply over the full recommended ambient operating temperature range, unless otherwise specified.

3.6 Electrical test requirements. Electrical test requirements for each device class shall be the subgroups specified in table II. The electrical tests for each subgroup are described in table III.

3.7 Marking. Marking shall be in accordance with MIL-PRF-38535.

3.8 Microcircuit group assignment. The devices covered by this specification shall be in microcircuit group number 53 (see MIL-PRF-38535, appendix A).

TABLE I. Electrical performance characteristics.

Test	Symbol	Conditions $-55°C \le T_A \le +125°C$ unless otherwise specified	Device type	Limits		Units
				Min	Max	
Input clamp voltage	V_{IC}	V_{CC} = 4.5 V, I_{IN} = -12 mA	All		-1.5	V
High level input currents into A or B	I_{IH1}	V_{CC} = 5.5 V, V_{IN} = 2.4 V	All		40	µA
	I_{IH2}	V_{CC} = 5.5 V, V_{IN} = 5.5 V			1	mA
High level input current into G	I_{IH3}	V_{CC} = 5.5 V, V_{IN} = 2.4 V	01,06		80	µA
	I_{IH4}	V_{CC} = 5.5 V, V_{IN} = 5.5 V			2	mA
Low level input currents into A or B	I_{IL1}	V_{CC} = 5.5 V, V_{IN} = 0.4 V or 5.5 V	All		-1.6	mA
Low level input current into G	I_{IL2}	V_{CC} = 5.5 V, V_{IN} = 0.4 V or 5.5 V	01,06		-3.2	mA
High level supply current	I_{CCH1}	V_{CC} = 5.5 V, V_{IN} = 0 V	01,06		4	mA
	I_{CCH2}	V_{CC} = 5.5 V, V_{IN} = 5.5 V	02,04, 07,09		11	
	I_{CCH3}	V_{CC} = 5.5 V, V_{IN} = 0 V	05,08		17	
	I_{CCH4}	V_{CC} = 5.5 V, V_{IN} = 0 V	03		14	
	I_{CCH5}	V_{CC} = 5.5 V, V_{IN} = 0 V	10		10	
Low level supply current	I_{CCL1}	V_{CC} = 5.5 V, V_{IN} = 5.5 V	01,06		11	mA
	I_{CCL2}	V_{CC} = 5.5 V, V_{IN} = 0 V	02		65	
	I_{CCL3}	V_{CC} = 5.5 V, V_{IN} = 0 V	04		63	
	I_{CCL4}	V_{CC} = 5.5 V, V_{IN} = 5.5 V	03		71	
	I_{CCL5}	V_{CC} = 5.5 V, V_{IN} = 0 V	07,09		76	
	I_{CCL6}	V_{CC} = 5.5 V, V_{IN} = 5.5 V	08		76	
	I_{CCL7}	V_{CC} = 5.5 V, V_{IN} = 5.5 V	05		79	
	I_{CCL8}	V_{CC} = 5.5 V, V_{IN} = 5.5 V	10		85	

TABLE I. Electrical performance characteristics – Continued.

Test	Symbol	Conditions $-55°C \le T_A \le +125°C$ unless otherwise specified	Device type	Limits		Units
				Min	Max	
Low level output voltage	V_{OL1}	V_{CC} = 4.5 V, V_{IN} = 0.8 V or 4.5 V; I_{OL} = 100 mA	02, 07		0.5	V
	V_{OL2}	V_{CC} = 4.5 V, V_{IN} = 2 V, I_{OL} = 100 mA	03, 08		0.5	
	V_{OL3}	V_{CC} = 4.5 V, V_{IN} = 0.8 V, I_{OL} = 100 mA	04, 09		0.5	
	V_{OL4}	V_{CC} = 4.5 V, V_{IN} = 2 V or 0 V, I_{OL} = 100 mA	05, 10		0.5	
	V_{OL5}	V_{CC} = 4.5 V, V_{IN} = 0.8 V or 4.5 V, I_{OL} = 300 mA	02, 07		0.8	
	V_{OL6}	V_{CC} = 4.5 V, V_{IN} = 2 V, I_{OL} = 300 mA	03, 08		0.8	
	V_{OL7}	V_{CC} = 4.5 V, V_{IN} = 0.8 V, I_{OL} = 300 mA	04, 09		0.8	
	V_{OL8}	V_{CC} = 4.5 V, V_{IN} = 2 V or 0 V, I_{OL} = 300 mA	05, 10		0.8	
Low level output voltage, TTL gate	V_{OL9}	V_{CC} = 4.5 V, V_{IN} = 2 V, I_O = 16 mA	01, 06		0.5	V
High level output current	I_{OH1}	V_{CC} = 4.5 V, V_{OH} = 30 V, V_{IN} = 2 V	02,07		300	μA
	I_{OH2}	V_{CC} = 4.5 V, V_{OH} = 30 V, V_{IN} = 0.8 V or 4.5 V	03,08		300	
	I_{OH3}	V_{CC} = 4.5 V, V_{OH} = 30 V, V_{IN} = 2 V or 0 V	04,09		300	
	I_{OH4}	V_{CC} = 4.5 V, V_{OH} = 30 V, V_{IN} = 0.8 V	05,10		300	
High level output voltage, TTL gate	V_{OH}	V_{CC} = 4.5 V, V_{IN} = 0.8 V, I_{OL} = -400 μA	01,06	2.4		V
Short circuit output current, TTL gate	I_{OS1}	V_{CC} = 5.5 V	01,06		-55	mA
	I_{OS2}	V_{CC} = 4.5 V		-18		
Collector base breakdown voltage	V_{CB01}	I_C = 100 μA, I_E = 0	01	35		V
	V_{CB02}	I_C = 100 μA, I_E = 0	06	40		
Collector emitter breakdown voltage	V_{CER1}	I_C = 100 μA, R_{BE} = 500 Ω	01	35		V
	V_{CER2}	I_C = 100 μA, R_{BE} = 500 Ω	06	40		

TABLE I. Electrical performance characteristics – Continued.

Test	Symbol	Conditions $-55°C \le T_A \le +125°C$ unless otherwise specified	Device type	Limits Min	Limits Max	Units
Collector emitter breakdown voltage	V_{CE01}	I_C = 10 mA	06	25		V
Emitter base breakdown voltage	V_{EBO}	I_E = 100 μA, I_C = 0	01,06	5		V
Static forward current transfer ratio	h_{FE1}	V_{CE} = 3 V, I_C = 100 mA, V_S = 4 V, T_A = +25°C, +125°C	01,06	25		
	h_{FE2}	V_{CE} = 3 V, I_C = 300 mA, V_S = 6 V, T_A = +25°C, +125°C		30		
	h_{FE3}	V_{CE} = 3 V, I_C = 100 mA, V_S = 4 V, T_A = -55°C		10		
	h_{FE4}	V_{CE} = 3 V, I_C = 300 mA, V_S = 6 V, T_A = -55°C		15		
Base emitter voltage	V_{BE1}	I_B = 10 mA, I_C = 100 mA	01,06		1.2	V
	V_{BE2}	I_B = 30 mA, I_C = 300 mA			1.4	
Collector emitter saturation voltage	V_{CESAT1}	I_B = 10 mA, I_C = 100 mA	01,06		0.5	V
	V_{CESAT2}	I_B = 30 mA, I_C = 300 mA			0.8	
Delay time	t_D	I_C = 200 mA, R_L = 50 Ω, C_L = 100 pF, V_{BE} = -1 V, I_B = 20 mA, T_A = +25°C	01,06		15	ns
		I_C = 200 mA, R_L = 50 Ω, C_L = 100 pF, V_{BE} = -1 V, I_B = 20 mA, $-55°C \le T_A \le +125°C$			22.5	
Rise time	t_R	I_C = 200 mA, R_L = 50 Ω, C_L = 100 pF, V_{BE} = -1 V, I_B = 20 mA, T_A = +25°C	01,06		20	ns
		I_C = 200 mA, R_L = 50 Ω, C_L = 100 pF, V_{BE} = -1 V, I_B = 20 mA, $-55°C \le T_A \le +125°C$			30	
Storage time	t_S	I_C = 200 mA, R_L = 50 Ω, C_L = 100 pF, V_{BE} = -1 V, I_B = 20 mA, T_A = +25°C	01		15	ns
		I_C = 200 mA, R_L = 50 Ω, C_L = 100 pF, V_{BE} = -1 V, I_B = 20 mA, $-55°C \le T_A \le +125°C$			22.5	

TABLE I. Electrical performance characteristics – Continued.

Test	Symbol	Conditions $-55°C \le T_A \le +125°C$ unless otherwise specified	Device type	Limits Min	Limits Max	Units
Storage time	t_S	I_C = 200 mA, R_L = 50 Ω, C_L = 100 pF, V_{BE} = -1 V, I_B = 20 mA, T_A = +25°C	06		23	ns
		I_C = 200 mA, R_L = 50 Ω, C_L = 100 pF, V_{BE} = -1 V, I_B = 20 mA, $-55°C \le T_A \le +125°C$			34.5	
Fall time	t_F	I_C = 200 mA, R_L = 50 Ω, C_L = 100 pF, V_{BE} = -1 V, I_B = 20 mA, T_A = +25°C	01,06		15	ns
		I_C = 200 mA, R_L = 50 Ω, C_L = 100 pF, V_{BE} = -1 V, I_B = 20 mA, $-55°C \le T_A \le +125°C$			22.5	
Propagation delay time (low to high level output) TTL gate	t_{PLH1}	C_L = 100 pF, R_L = 400 Ω, V_{CC} = 4.5 V, T_A = +25°C	01,06		30	ns
		C_L = 100 pF, R_L = 400 Ω, V_{CC} = 4.5 V, $-55°C \le T_A \le +125°C$			45	
Propagation delay time (low to high level output)	t_{PLH2}	I_C = 200 mA, C_L = 100 pF, R_L = 50 Ω, V_{CC} = 4.5 V, T_A = +25°C	01		30	ns
		I_C = 200 mA, C_L = 100 pF, R_L = 50 Ω, V_{CC} = 4.5 V, $-55°C \le T_A \le +125°C$			45	
	t_{PLH3}	I_C = 200 mA, C_L = 100 pF, R_L = 50 Ω, V_{CC} = 4.5 V, T_A = +25°C	06		65	
		I_C = 200 mA, C_L = 100 pF, R_L = 50 Ω, V_{CC} = 4.5 V, $-55°C \le T_A \le +125°C$			90	
Propagation delay time (high to low level output) TTL gate	t_{PHL1}	C_L = 100 pF, R_L = 400 Ω, T_A = +25°C	01,06		15	ns
		C_L = 100 pF, R_L = 400 Ω, $-55°C \le T_A \le +125°C$			22.5	
Propagation delay time (high to low level output)	t_{PHL2}	I_C = 200 mA, C_L = 100 pF, R_L = 50 Ω, T_A = +25°C	01		30	ns
		I_C = 200 mA, C_L = 100 pF, R_L = 50 Ω, $-55°C \le T_A \le +125°C$			45	
	t_{PHL3}	I_C = 200 mA, C_L = 100 pF, R_L = 50 Ω, T_A = +25°C	01		50	
		I_C = 200 mA, C_L = 100 pF, R_L = 50 Ω, $-55°C \le T_A \le +125°C$			75	

TABLE I. Electrical performance characteristics – Continued.

Test	Symbol	Conditions $-55°C \le T_A \le +125°C$ unless otherwise specified	Device type	Limits Min	Limits Max	Units
Transition time (low to high level output)	t_{TLH1}	I_C = 200 mA, C_L = 100 pF, R_L = 50 Ω, T_A = +25°C	01		15	ns
		I_C = 200 mA, C_L = 100 pF, R_L = 50 Ω, $-55°C \le T_A \le +125°C$			22.5	
	t_{TLH2}	I_C = 200 mA, C_L = 100 pF, R_L = 50 Ω, T_A = +25°C	06		20	
		I_C = 200 mA, C_L = 100 pF, R_L = 50 Ω, $-55°C \le T_A \le +125°C$			30	
Transition time (high to low level output)	t_{THL1}	I_C = 200 mA, C_L = 100 pF, R_L = 50 Ω, T_A = +25°C	01		15	ns
		I_C = 200 mA, C_L = 100 pF, R_L = 50 Ω, $-55°C \le T_A \le +125°C$			22.5	
	t_{THL2}	I_C = 200 mA, C_L = 100 pF, R_L = 50 Ω, T_A = +25°C	06		20	
		I_C = 200 mA, C_L = 100 pF, R_L = 50 Ω, $-55°C \le T_A \le +125°C$			30	
Propagation delay time (low to high level output)	t_{PLH}	V_{CC} = 4.5 V, I_O = 200 mA, C_L = 100 pF, R_L = 50 Ω, T_A = +25°C	02,04		30	ns
		V_{CC} = 4.5 V, I_O = 200 mA, C_L = 100 pF, R_L = 50 Ω, $-55°C \le T_A \le +125°C$			45	
	t_{PLH}	V_{CC} = 4.5 V, I_O = 200 mA, C_L = 100 pF, R_L = 50 Ω, T_A = +25°C	03		35	
			05		45	
		V_{CC} = 4.5 V, I_O = 200 mA, C_L = 100 pF, R_L = 50 Ω, $-55°C \le T_A \le +125°C$	03		55	
			05		75	
	t_{PLH}	V_{CC} = 4.5 V, I_O = 200 mA, C_L = 100 pF, R_L = 50 Ω, T_A = +25°C	07,09		55	
		V_{CC} = 4.5 V, I_O = 200 mA, C_L = 100 pF, R_L = 50 Ω, $-55°C \le T_A \le +125°C$	07		65	
			09		70	

TABLE I. Electrical performance characteristics – Continued.

Test	Symbol	Conditions $-55°C \le T_A \le +125°C$ unless otherwise specified	Device type	Limits		Units
				Min	Max	
Propagation delay time (low to high level output)	t_{PLH}	V_{CC} = 4.5 V, I_O = 200 mA, C_L = 100 pF, R_L = 50 Ω, T_A = +25°C	08,10		65	ns
		V_{CC} = 4.5 V, I_O = 200 mA, C_L = 100 pF, R_L = 50 Ω, $-55°C \le T_A \le +125°C$	08		95	
			10		90	
Propagation delay time (high to low level output)	t_{PHL}	V_{CC} = 4.5 V, I_O = 200 mA, C_L = 100 pF, R_L = 50 Ω, T_A = +25°C	02,04		30	ns
		V_{CC} = 4.5 V, I_O = 200 mA, C_L = 100 pF, R_L = 50 Ω, $-55°C \le T_A \le +125°C$			45	
	t_{PHL}	V_{CC} = 4.5 V, I_O = 200 mA, C_L = 100 pF, R_L = 50 Ω, T_A = +25°C	03,05		35	
		V_{CC} = 4.5 V, I_O = 200 mA, C_L = 100 pF, R_L = 50 Ω, $-55°C \le T_A \le +125°C$			55	
	t_{PHL}	V_{CC} = 4.5 V, I_O = 200 mA, C_L = 100 pF, R_L = 50 Ω, T_A = +25°C	07,09		40	
		V_{CC} = 4.5 V, I_O = 200 mA, C_L = 100 pF, R_L = 50 Ω, $-55°C \le T_A \le +125°C$			60	
	t_{PHL}	V_{CC} = 4.5 V, I_O = 200 mA, C_L = 100 pF, R_L = 50 Ω, T_A = +25°C	08,10		50	
		V_{CC} = 4.5 V, I_O = 200 mA, C_L = 100 pF, R_L = 50 Ω, $-55°C \le T_A \le +125°C$			75	

TABLE I. Electrical performance characteristics – Continued.

Test	Symbol	Conditions $-55°C \le T_A \le +125°C$ unless otherwise specified	Device type	Limits Min	Limits Max	Units
Transition time (low to high level output)	t_{TLH}	V_{CC} = 4.5 V, I_O = 200 mA, C_L = 100 pF, R_L = 50 Ω, T_A = +25°C	02,03, 04,05		14	ns
		V_{CC} = 4.5 V, I_O = 200 mA, C_L = 100 pF, R_L = 50 Ω, $-55°C \le T_A \le +125°C$			18.5	
	t_{TLH}	V_{CC} = 4.5 V, I_O = 200 mA, C_L = 100 pF, R_L = 50 Ω, T_A = +25°C	07,10		20	
		V_{CC} = 4.5 V, I_O = 200 mA, C_L = 100 pF, R_L = 50 Ω, $-55°C \le T_A \le +125°C$			26.5	
	t_{TLH}	V_{CC} = 4.5 V, I_O = 200 mA, C_L = 100 pF, R_L = 50 Ω, T_A = +25°C	08,09		25	
		V_{CC} = 4.5 V, I_O = 200 mA, C_L = 100 pF, R_L = 50 Ω, $-55°C \le T_A \le +125°C$			33.5	
Transition time (high to low level output)	t_{THL}	V_{CC} = 4.5 V, I_O = 200 mA, C_L = 100 pF, R_L = 50 Ω, T_A = +25°C	02,03, 04,05		20	ns
		V_{CC} = 4.5 V, I_O = 200 mA, C_L = 100 pF, R_L = 50 Ω, $-55°C \le T_A \le +125°C$			25	
	t_{THL}	V_{CC} = 4.5 V, I_O = 200 mA, C_L = 100 pF, R_L = 50 Ω, T_A = +25°C	07,08,10		20	
		V_{CC} = 4.5 V, I_O = 200 mA, C_L = 100 pF, R_L = 50 Ω, $-55°C \le T_A \le +125°C$	07,10		25	
			08		35	
	t_{THL}	V_{CC} = 4.5 V, I_O = 200 mA, C_L = 100 pF, R_L = 50 Ω, T_A = +25°C	09		25	

TABLE II. Electrical test requirements.

MIL-PRF-38535 test requirements	Subgroups (see table III)	
	Class S devices	Class B devices
Interim electrical parameters	1	1
Final electrical test parameters	1*, 2, 3, 9	1*, 2, 3, 9
Group A test requirements	1, 2, 3, 9, 10, 11	1, 2, 3, 9, 10, 11
Group B electrical test parameters when using the method 5005 QCI option	1, 2, 3, and table IV delta limits	N/A
Group C end-point electrical parameters	1, 2, 3, and table IV delta limits	1 and table IV delta limits
Group D end-point electrical parameters	1, 2, 3	1

*PDA applies to subgroup 1.

4. VERIFICATION.

4.1 Sampling and inspection. Sampling and inspection procedures shall be in accordance with MIL-PRF-38535 or as modified in the device manufacturer's Quality Management (QM) plan. The modification in the QM plan shall not effect the form, fit, or function as described herein.

4.2 Screening. Screening shall be in accordance with MIL-PRF-38535, and shall be conducted on all devices prior to qualification and quality conformance inspection. The following additional criteria shall apply:

a. The burn-in test duration, test condition, and test temperature, or approved alternatives shall be as specified in the device manufacturer's QM plan in accordance with MIL-PRF-38535. The burn-in test circuit shall be maintained under document control by the device manufacturer's Technology Review Board (TRB) in accordance with MIL-PRF-38535 and shall be made available to the acquiring or preparing activity upon request. The test circuit shall specify the inputs, outputs, biases, and power dissipation, as applicable, in accordance with the intent specified in test method 1015 of MIL-STD-883.

b. Interim and final electrical test parameters shall be as specified in table II, except interim electrical parameters test prior to burn-in is optional at the discretion of the manufacturer.

c. Additional screening for space level product shall be as specified in MIL-PRF-38535.

4.3 Qualification inspection. Qualification inspection shall be in accordance with MIL-PRF-38535.

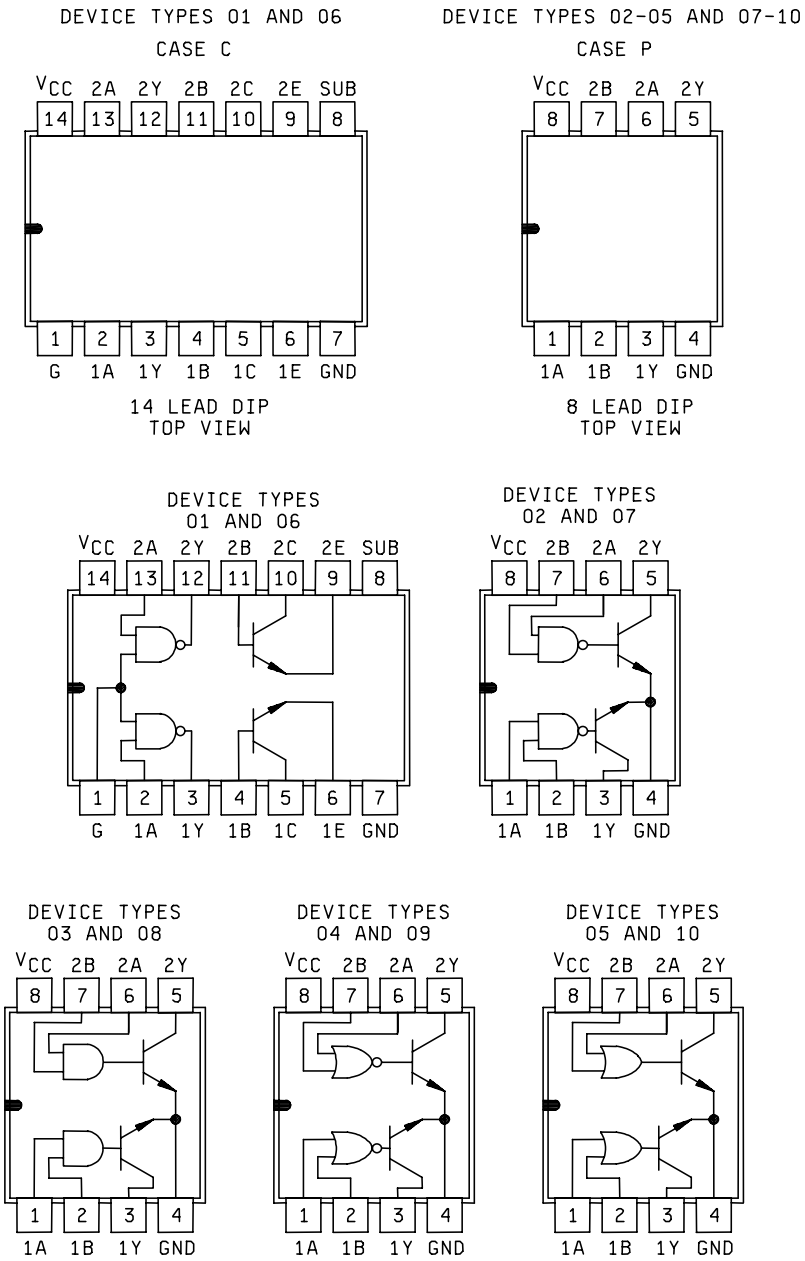

Figure 1. Logic diagrams and terminal connections.

Device types
01, 06

A	G	Y	Y'
0	0	1	0
0	1	1	0
1	0	1	0
1	1	0	1

Y is output at the gate.
Y' is output at the transistor with the gate connected to the base of the transistor.

Device types
02, 07

A	B	Y	OUTPUT
0	0	0	ON
0	1	0	ON
1	0	0	ON
1	1	1	OFF

Device types
03, 08

A	B	Y	OUTPUT
0	0	1	OFF
0	1	1	OFF
1	0	1	OFF
1	1	0	ON

Device types
04, 09

A	B	Y	OUTPUT
0	0	0	ON
0	1	1	OFF
1	0	1	OFF
1	1	1	OFF

Device types
05, 10

A	B	Y	OUTPUT
0	0	1	OFF
0	1	0	ON
1	0	0	ON
1	1	0	ON

Figure 2. Truth tables.

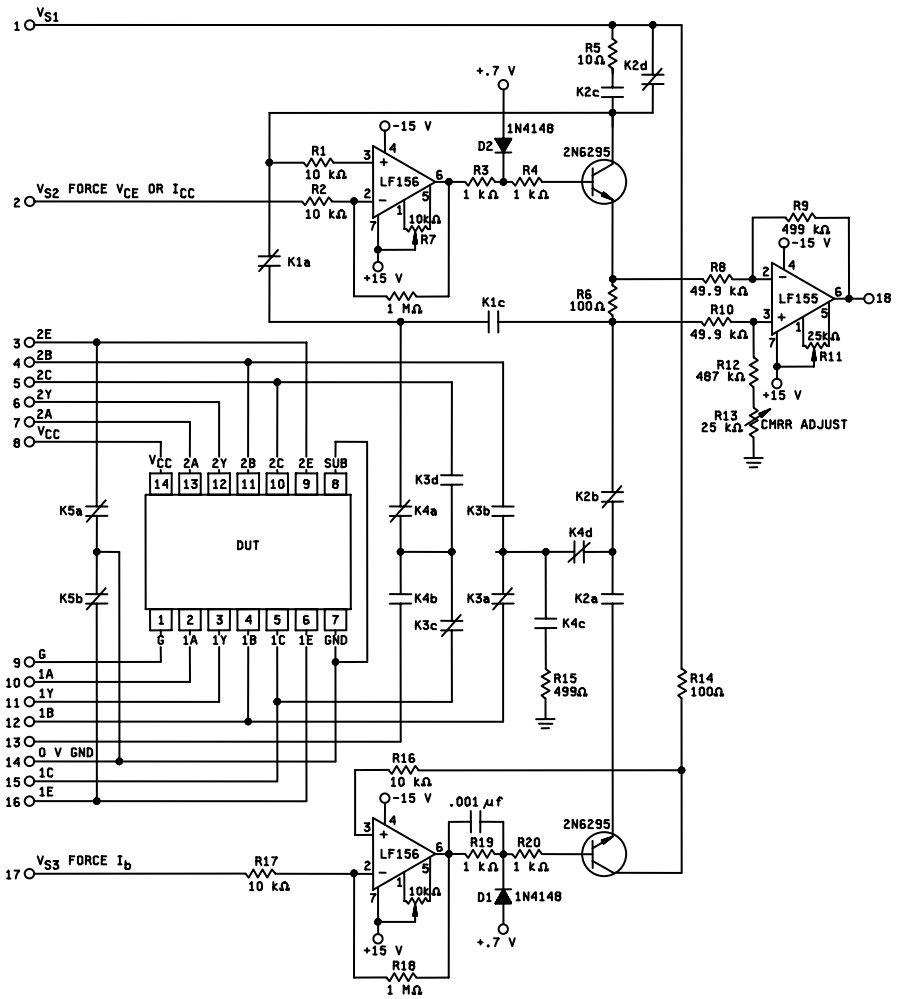

NOTES:

1. The output offset voltage shall be adjusted to zero volts with the device under test (DUT) removed. The operational amplifier stabilization networks may vary with test adapter construction. Alternative drive circuits for the 2N6295 may be used to develop the proper forcing currents and input voltage pulses. These circuits shall require the approval of the qualifying activity.
2. Relay switch positions are defined in table III.
3. Resistors R5, R6, R14 shall have a tolerance ≤ 0.1% for device types 01, 06.
4. Reference figure 4 for input and output waveforms for device types 01, 06.

FIGURE 3. Test circuit for static tests, device types 01 and 06.

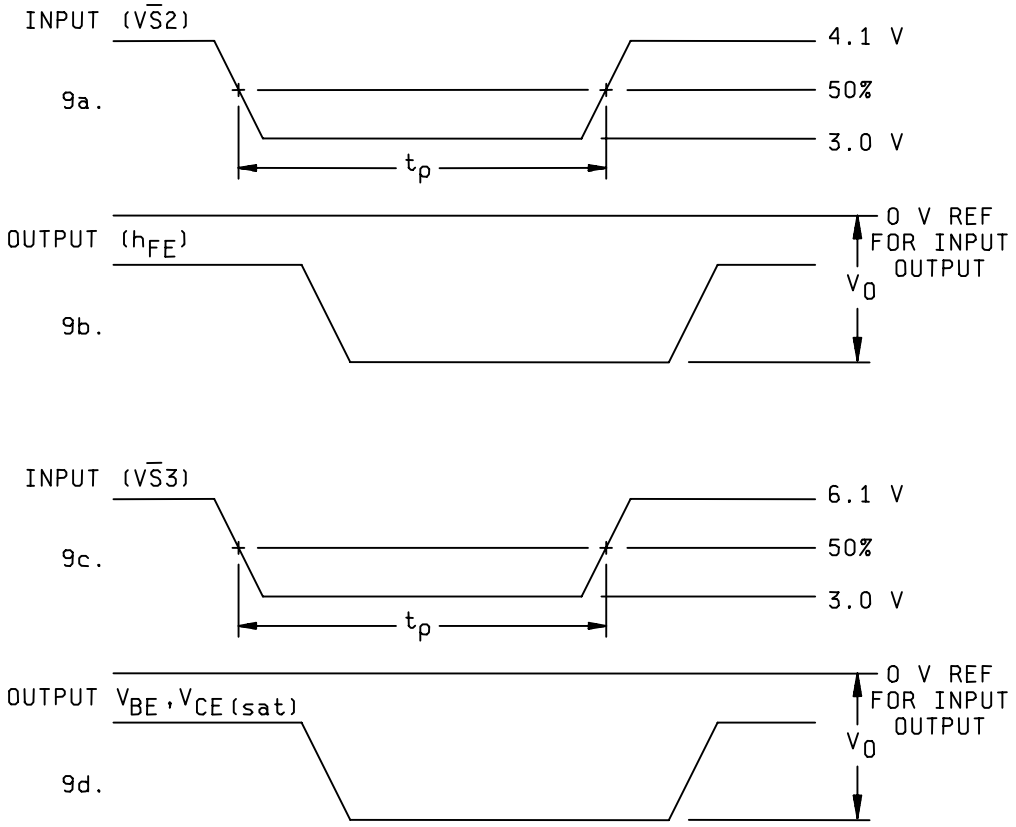

NOTES:

1. The pulse generator shall have the following characteristics:
   PRR = 1 kHz, t_p = 20 µs, $Z_{out} \cong 50\ \Omega$, t_r, t_f = 10 ns.
2. All V_O measurements are referenced to 0 V GND.
3. Use figures 4a and 4b for tests 23 – 26 and figures 4a, 4c, and 4d for tests 27 – 34.

FIGURE 4. h_{FE}, V_{BE}, $V_{CE(sat)}$ waveforms for table III, device types 01 and 06.

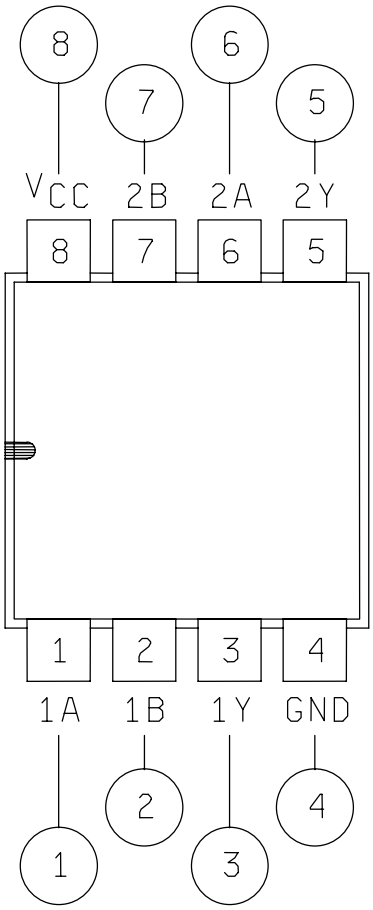

Figure 5. Test circuit for static tests, device types 02 through 05 and 07 through 10.

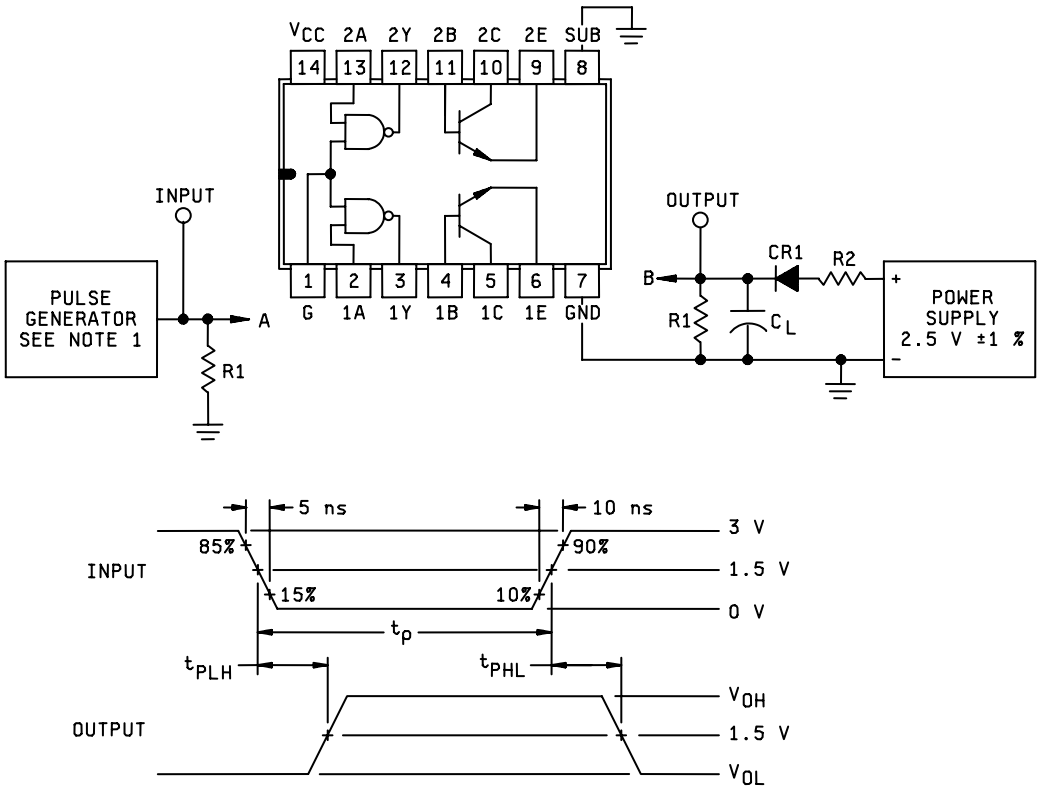

NOTES:

1. The pulse generator shall have the following characteristics: PRR = 1 MHz, t_p = 0.5 µs, $Z_{out} \cong 50\ \Omega$.
2. R1 = 6.04 kΩ ±1 percent, 1/8 watt.
3. C_L = 100 pF, ±5 pF (including probe and parasitic capacitance).
4. Select R2 for a current flow of 16 mA ±1% out of Point B with Point L held at 0.5 volts.
5. CR1 = 1N4150 or equivalent.
6. R1 = 51 Ω ±5% carbon.

Figure 6. Propagation delay time waveforms (TTL gates only), for device types 01 and 06.

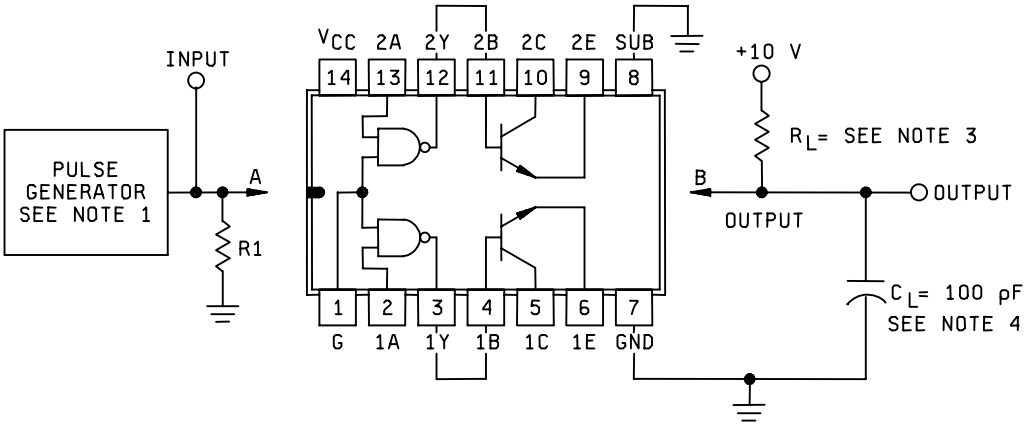

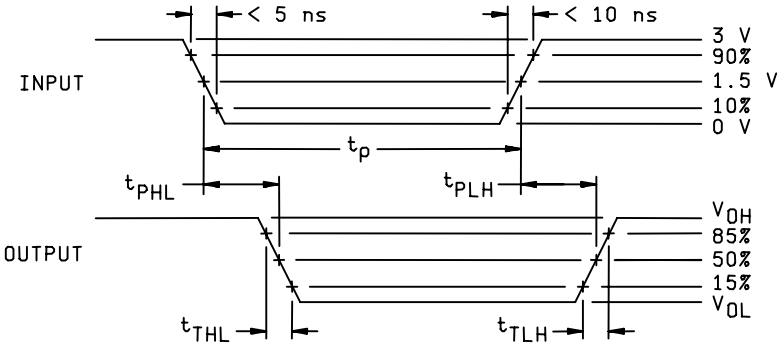

NOTES:

1. The pulse generator shall have the following characteristics: PRR = 1 MHz, t_p = 0.5 µs, $Z_{out} \cong 50\ \Omega$.
2. When testing device 01 or 06, connect output Y to transistor base and ground the substrate terminal.
3. R_L = 47 Ω ±5% carbon.
4. C_L = 100 pF minimum, including probe and jig capacitance.
5. R1 = 51 Ω ±5% carbon.

FIGURE 7. Switching time waveforms (TTL gates and transistors combined) for device types 01 and 06.

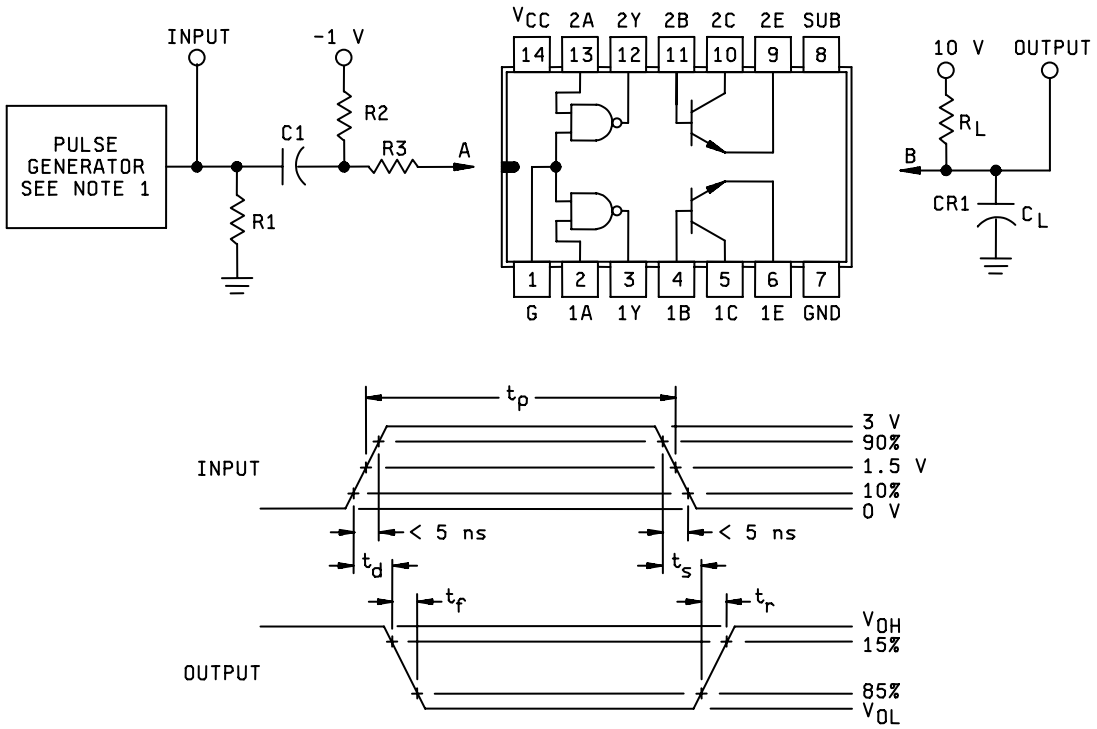

NOTES:

1. The pulse generator shall have the following characteristics: PRR = 1 MHz, t_p = 0.3 μs, $Z_{out} \cong 50\ \Omega$.
2. C_L = 100 pF minimum, including probe and jig capacitance.
3. R1 = 62 Ω ±5% carbon.
4. R2 = 1 kΩ ±5% carbon.
5. C1 = 0.1 μF ±5% .
6. R_L = 47 Ω ±5% carbon.
7. R3 = 51Ω ±5% carbon.
8. All voltages have a tolerance of ±1% of nominal.

FIGURE 8. Switching times (transistors only) for device types 01 and 06.

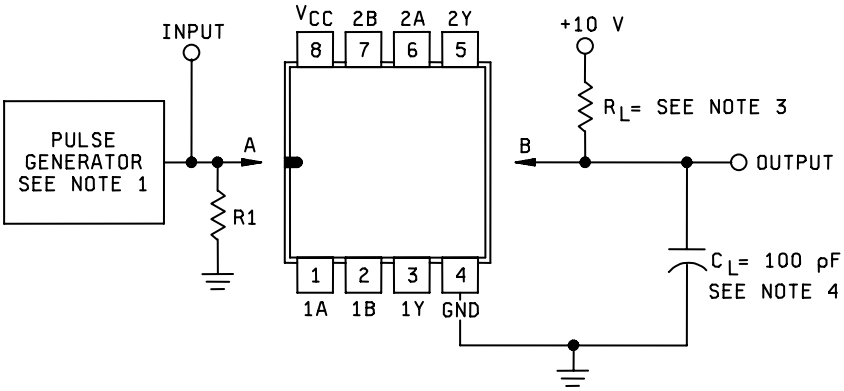

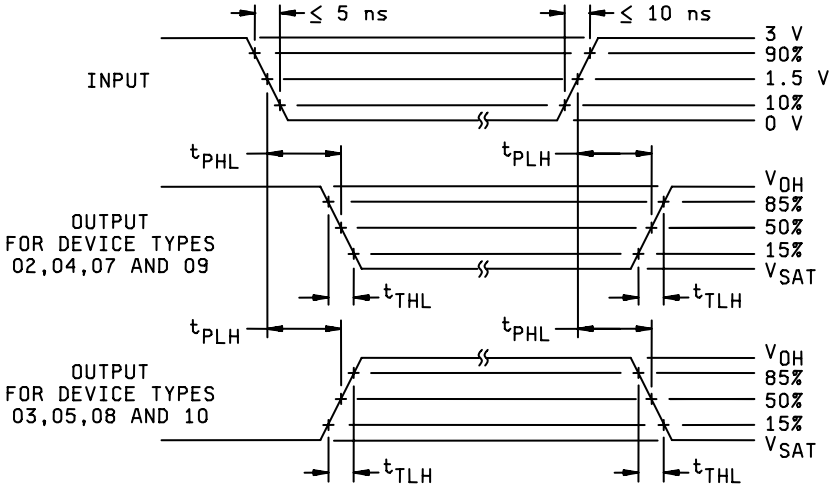

NOTES:

1. Pulse generator shall have the following characteristics: PRR ≤ 1 MHz, $Z_{out} \cong 50\ \Omega$, $t_r \leq 10$ ns, $t_f \leq 5$ ns.
2. R1 = 51 Ω ±5%.
3. R_L = 47 Ω ±5%.
4. C_L = 100 pF ±10%, including probe and jig capacitance.

FIGURE 9. Switching time waveforms for device types 02 through 05 and 07 through 10.

TABLE III. Group A inspection for device type 01.

Subgroup	Symbol	Test no.	1	2	17	12	15	16	4	3	5	8	9	10	11	7	6	Relays ener-gized	Measured terminal			Equations	Note	Test limits		Unit
			V_{S1}	V_{S2}	V_{S3}	1B	1C	1E	2B	2E	2C	V_{CC}	G	1A	1Y	2A	2Y		No.	Value	Unit			Min	Max	
1	V_{IC}	1										4.5 V	-12 mA	4.5 V		4.5 V		None	9	E1	V	V_{IC} = E1	See		-1.5	V
T_A =	V_{IC}	2										4.5 V	4.5 V	-12 mA		4.5 V		"	10	E2	V	V_{IC} = E2	figure 3		-1.5	V
+25°C	V_{IC}	3										4.5 V	4.5 V	4.5 V		-12 mA		"	7	E3	V	V_{IC} = E3	for test		-1.5	V
	I_{IH1}	4										5.5 V	GND	2.4 V		GND		"	10	I1	A	I_{IH1} = I1	circuit		40	µA
	I_{IH1}	5										"	"	GND		2.4 V		"	7	I2	"	I_{IH1} = I2	"		40	µA
	I_{IH2}	6										"	"	5.5 V		GND		"	10	I3	"	I_{IH2} = I3	"		1	mA
	I_{IH2}	7										"	"	GND		5.5 V		"	7	I4	"	I_{IH2} = I4	"		1	mA
	I_{IH3}	8										"	2.4 V	GND		GND		"	9	I5	"	I_{IH3} = I5	"		80	µA
	I_{IH4}	9										"	5.5 V	GND		GND		"	9	I6	"	I_{IH4} = I6	"		2	mA
	I_{IL1}	10										"	5.5 V	0.4 V		5.5 V		"	10	I7	"	I_{IL1} = I7	"		-1.6	mA
	I_{IL1}	11										"	5.5 V	5.5 V		0.4 V		"	7	I8	"	I_{IL1} = I8	"		-1.6	"
	I_{IL2}	12										"	0.4 V	5.5 V		5.5 V		"	9	I9	"	I_{IL2} = I9	"		-3.2	"
	I_{CCH1}	13										"	GND	GND		GND		"	8	I10	"	I_{CCH1} = I10	"		4	"
	I_{CCL1}	14										"	5.5 V	5.5 V		5.5 V		"	8	I11	"	I_{CCL1} = I11	"		11	"
	V_{OL9}	15										4.5 V	2 V	2 V	I_{OL} = 16 mA			"	11	E4	V	V_{OL9} = E4	"		0.5	V
	V_{OL9}	16										"	2 V			2 V	I_{OL} = 16 mA	"	6	E5	"	V_{OL9} = E5	"		0.5	"
	V_{OH}	17										"	4.5 V	0.8 V	I_{OH} = -400 µA			"	11	E6	"	V_{OH} = E6	"	2.4		"
	V_{OH}	18										"	4.5 V			0.8 V	I_{OH} = -400 µA	"	6	E7	"	V_{OH} = E7	"	2.4		"
	I_{OS1}	19										5.5 V	GND	GND	GND			"	11	I12	A	I_{OS1} = I12	"		-55	mA
	I_{OS1}	20										5.5 V	"			GND	GND	"	6	I13	"	I_{OS1} = I13	"		-55	mA
	I_{OS2}	21										4.5 V	"	GND	GND			"	11	I14	"	I_{OS2} = I14	"	-18		"
	I_{OS2}	22										4.5 V	"			GND	GND	"	6	I15	"	I_{OS2} = I15	"	-18		"
	h_{FE1}	23	4 V	$V_{\overline{S}}$ 2														"	18 to 14	E8	V	h_{FE1} = E8/1000	See figures 3 and 4	25		
	h_{FE1}	24	4 V	"														3	"	E9	"	h_{FE1} = E9/1000	for test	25		
	h_{FE2}	25	6 V	"														None	"	E10	"	h_{FE2} = E10/3000	circuit	30		
	h_{FE2}	26	6 V	"														3	"	E11	"	h_{FE2} = E11/3000	and waveforms	30		
	V_{BE1}	27	4 V	"	$V_{\overline{S}}$ 3													1,2	12 to 16	E12	"	V_{BE1} = E12	"		1.2	V
	V_{BE1}	28	4 V	"	$V_{\overline{S}}$ 3													1,2,3	11 to 10	E13	"	V_{BE1} = E13	"		1.2	V

TABLE III. Group A inspection for device type 01 – Continued.

Subgroup	Symbol	Test no.	1	2	17	12	15	16	4	3	5	8	9	10	11	7	6	Relays ener-	Measured terminal			Equations	Note	Test limits		Unit
			V_{S1}	V_{S2}	V_{S3}	1B	1C	1E	2B	2E	2C	V_{CC}	G	1A	1Y	2A	2Y	gized	No.	Value	Unit			Min	Max	
1 T_A = +25°C	V_{BE2}	29	6 V	$V_{\overline{S}2}$	$V_{\overline{S}3}$													1,2	12 to 16	E14	V	V_{BE2} = E14	See figures 3 and 4		1.4	V
	V_{BE2}	30	6 V	"	"													1,2,3	11 to 10	E15	"	V_{BE2} = E15	for test		1.4	V
	V_{CESAT1}	31	4 V	"	"													1,2	5 to 6	E16	"	V_{CESAT1} = E16	circuit		0.5	"
	V_{CESAT1}	32	4 V	"	"													1,2,3	10 to 9	E17	"	V_{CESAT1} = E17	and waveforms		0.5	"
	V_{CESAT2}	33	6 V	"	"													1,2	5 to 6	E18	"	V_{CESAT2} = E18	"		0.8	"
	V_{CESAT2}	34	6 V	"	"													1,2,3	10 to 9	E19	"	V_{CESAT2} = E19	"		0.8	"
	V_{CB01}	35				GND	100 µA											3	15 to 12	E20	"	V_{CB01} = E20	See figure 3 for test	35		"
	V_{CB01}	36							GND		100 µA							4	5 to 3	E21	"	V_{CB01} = E21	circuit	35		"
	V_{CER1}	37					100 µA	GND										4	15 to 16	E22	"	V_{CER1} = E22	"	35		"
	V_{CER1}	38								GND	100 µA							3,4	5 to 3	E23	"	V_{CER1} = E23	"	35		"
	V_{EBO}	39				GND		100 µA										3,4	16 to 12	E24	"	V_{EBO} = E24	"	5		"
	V_{EBO}	40							GND	100 µA								4	3 to 4	E25	"	V_{EBO} = E25	"	5		"
2 T_A = +125°C	V_{IC}	41										4.5 V	-12 mA	4.5 V		4.5 V		None	9	E1	V	V_{IC} = E1	See		-1.5	V
	V_{IC}	42										4.5 V	4.5 V	-12 mA		4.5 V		"	10	E2	V	V_{IC} = E2	figure 3		-1.5	V
	V_{IC}	43										4.5 V	4.5 V	4.5 V		-12 mA		"	7	E3	V	V_{IC} = E3	for test		-1.5	V
	I_{IH1}	44										5.5 V	GND	2.4 V		GND		"	10	I1	A	I_{IH1} = I1	circuit		40	µA
	I_{IH1}	45										"	"	GND		2.4 V		"	7	I2	"	I_{IH1} = I2	"		40	µA
	I_{IH2}	46										"	"	5.5 V		GND		"	10	I3	"	I_{IH2} = I3	"		1	mA
	I_{IH2}	47										"	"	GND		5.5 V		"	7	I4	"	I_{IH2} = I4	"		1	mA
	I_{IH3}	48										"	2.4 V	GND		GND		"	9	I5	"	I_{IH3} = I5	"		80	µA
	I_{IH4}	49										"	5.5 V	GND		GND		"	9	I6	"	I_{IH4} = I6	"		2	mA
	I_{IL1}	50										"	5.5 V	0.4 V		5.5 V		"	10	I7	"	I_{IL1} = I7	"		-1.6	mA
	I_{IL1}	51										"	5.5 V	5.5 V		0.4 V		"	7	I8	"	I_{IL1} = I8	"		-1.6	"
	I_{IL2}	52										"	0.4 V	5.5 V		5.5 V		"	9	I9	"	I_{IL2} = I9	"		-3.2	"
	I_{CCH1}	53										"	GND	GND		GND		"	8	I10	"	I_{CCH1} = I10	"		4	"
	I_{CCL1}	54										"	5.5 V	5.5 V		5.5 V		"	8	I11	"	I_{CCL1} = I11	"		11	"

TABLE III. Group A inspection for device type 01 – Continued.

Subgroup	Symbol	Test no.	1	2	17	12	15	16	4	3	5	8	9	10	11	7	6	Relays ener-gized	Measured terminal			Equations	Note	Test limits		Unit
			V_{S1}	V_{S2}	V_{S3}	1B	1C	1E	2B	2E	2C	V_{CC}	G	1A	1Y	2A	2Y		No.	Value	Unit			Min	Max	
2	V_{OL9}	55										4.5 V	2 V	2 V	I_{OL} = 16 mA			None	11	E4	V	V_{OL9} = E4	See		0.5	V
T_A =	V_{OL9}	56										"	2 V			2 V	I_{OL} = 16 mA	"	6	E5	"	V_{OL9} = E5	figure 3		0.5	"
+125°C	V_{OH}	57										"	4.5 V	0.8 V	I_{OH} = -400 µA			"	11	E6	"	V_{OH} = E6	for test	2.4		"
	V_{OH}	58										"	4.5 V			0.8 V	I_{OH} = -400 µA	"	6	E7	"	V_{OH} = E7	circuit	2.4		"
	I_{OS1}	59										5.5 V	GND	GND	GND			"	11	I12	A	I_{OS1} = I12	"		-55	mA
	I_{OS1}	60										5.5 V	"			GND	GND	"	6	I13	"	I_{OS1} = I13	"		-55	"
	I_{OS2}	61										4.5 V	"	GND	GND			"	11	I14	"	I_{OS2} = I14	"	-18		"
	I_{OS2}	62										4.5 V	"			GND	GND	"	6	I15	"	I_{OS2} = I15	"	-18		"
	h_{FE1}	63	4 V	$V_{\overline{S}2}$														"	18 to 14	E8	V	h_{FE1} = E8/1000	See figures 3 and 4	25		
	h_{FE1}	64	4 V	"														3	"	E9	"	h_{FE1} = E9/1000	for test	25		
	h_{FE2}	65	6 V	"														None	"	E10	"	h_{FE2} = E10/3000	circuit	30		
	h_{FE2}	66	6 V	"														3	"	E11	"	h_{FE2} = E11/3000	and waveforms	30		
	V_{BE1}	67	4 V	"	$V_{\overline{S}3}$													1,2	12 to 16	E12	"	V_{BE1} = E12	"		1.2	V
	V_{BE1}	68	4 V	"	$V_{\overline{S}3}$													1,2,3	11 to 10	E13	"	V_{BE1} = E13	"		1.2	V
	V_{BE2}	69	6 V	"	$V_{\overline{S}3}$													1,2	12 to 16	E14	V	V_{BE2} = E14	See figures 3 and 4		1.4	V
	V_{BE2}	70	6 V	"	"													1,2,3	11 to 10	E15	"	V_{BE2} = E15	for test		1.4	V
	V_{CESAT1}	71	4 V	"	"													1,2	5 to 6	E16	"	V_{CESAT1} = E16	circuit		0.5	"
	V_{CESAT1}	72	4 V	"	"													1,2,3	10 to 9	E17	"	V_{CESAT1} = E17	and waveforms		0.5	"
	V_{CESAT2}	73	6 V	"	"													1,2	5 to 6	E18	"	V_{CESAT2} = E18	"		0.8	"
	V_{CESAT2}	74	6 V	"	"													1,2,3	10 to 9	E19	"	V_{CESAT2} = E19	"		0.8	"
	V_{CB01}	75				GND	100 µA											3	15 to 12	E20	"	V_{CB01} = E20	See figure 3 for test	35		"
	V_{CB01}	76							GND		100 µA							4	5 to 3	E21	"	V_{CB01} = E21	circuit	35		"
	V_{CER1}	77					100 µA	GND										4	15 to 16	E22	"	V_{CER1} = E22	"	35		"
	V_{CER1}	78								GND	100 µA							3,4	5 to 3	E23	"	V_{CER1} = E23	"	35		"

TABLE III. Group A inspection for device type 01 – Continued.

Subgroup	Symbol	Test no.	1	2	17	12	15	16	4	3	5	8	9	10	11	7	6	Relays ener-gized	Measured terminal			Equations	Note	Test limits		Unit
			V_{S1}	V_{S2}	V_{S3}	1B	1C	1E	2B	2E	2C	V_{CC}	G	1A	1Y	2A	2Y		No.	Value	Unit			Min	Max	
2 T_A = +125°C	V_{EBO}	79				GND		100 μA										3,4	16 to 12	E24	V	V_{EBO} = E24	See figure 3 for test	5		V
	V_{EBO}	80							GND	100 μA								4	3 to 4	E25	"	V_{EBO} = E25	circuit	5		"
3 T_A = -55°C	V_{IC}	81										4.5 V	-12 mA	4.5 V		4.5 V		None	9	E1	V	V_{IC} = E1	See		-1.5	V
	V_{IC}	82										4.5 V	4.5 V	-12 mA		4.5 V		"	10	E2	V	V_{IC} = E2	figure 3		-1.5	V
	V_{IC}	83										4.5 V	4.5 V	4.5 V		-12 mA		"	7	E3	V	V_{IC} = E3	for test		-1.5	V
	I_{IH1}	84										5.5 V	GND	2.4 V		GND		"	10	I1	A	I_{IH1} = I1	circuit		40	μA
	I_{IH1}	85										"	"	GND		2.4 V		"	7	I2	"	I_{IH1} = I2	"		40	μA
	I_{IH2}	86										"	"	5.5 V		GND		"	10	I3	"	I_{IH2} = I3	"		1	mA
	I_{IH2}	87										"	"	GND		5.5 V		"	7	I4	"	I_{IH2} = I4	"		1	mA
	I_{IH3}	88										"	2.4 V	GND		GND		"	9	I5	"	I_{IH3} = I5	"		80	μA
	I_{IH4}	89										"	5.5 V	GND		GND		"	9	I6	"	I_{IH4} = I6	"		2	mA
	I_{IL1}	90										"	5.5 V	0.4 V		5.5 V		"	10	I7	"	I_{IL1} = I7	"		-1.6	mA
	I_{IL1}	91										"	5.5 V	5.5 V		0.4 V		"	7	I8	"	I_{IL1} = I8	"		-1.6	"
	I_{IL2}	92										"	0.4 V	5.5 V		5.5 V		"	9	I9	"	I_{IL2} = I9	"		-3.2	"
	I_{CCH1}	93										"	GND	GND		GND		"	8	I10	"	I_{CCH1} = I10	"		4	"
	I_{CCL1}	94										"	5.5 V	5.5 V		5.5 V		"	8	I11	"	I_{CCL1} = I11	"		11	"
	V_{OL9}	95										4.5 V	2 V	2 V	I_{OL} = 16 mA			"	11	E4	V	V_{OL9} = E4	"		0.5	V
	V_{OL9}	96										"	2 V			2 V	I_{OL} = 16 mA	"	6	E5	"	V_{OL9} = E5	"		0.5	"
	V_{OH}	97										"	4.5 V	0.8 V	I_{OH} = -400 μA			"	11	E6	"	V_{OH} = E6	"	2.4		"
	V_{OH}	98										"	4.5 V			0.8 V	I_{OH} = -400 μA	"	6	E7	"	V_{OH} = E7	"	2.4		"
	I_{OS1}	99										5.5 V	GND	GND	GND			"	11	I12	A	I_{OS1} = I12	"		-55	mA
	I_{OS1}	100										5.5 V	"			GND	GND	"	6	I13	"	I_{OS1} = I13	"		-55	mA
	I_{OS2}	101										4.5 V	"	GND	GND			"	11	I14	"	I_{OS2} = I14	"	-18		"
	I_{OS2}	102										4.5 V	"			GND	GND	"	6	I15	"	I_{OS2} = I15	"	-18		"
	h_{FE3}	103	4 V	$V_{\overline{S}2}$														"	18 to 14	E8	V	h_{FE3} = E8/1000	See figures 3 and 4	10		
	h_{FE3}	104	4 V	"														3	"	E9	"	h_{FE3} = E9/1000	for test	10		
	h_{FE4}	105	6 V	"														None	"	E10	"	h_{FE4} = E10/3000	circuit	15		
	h_{FE4}	106	6 V	"														3	"	E11	"	h_{FE4} = E11/3000	and waveforms	15		
	V_{BE1}	107	4 V	"	$V_{\overline{S}3}$													1,2	12 to 16	E12	"	V_{BE1} = E12	"		1.2	V
	V_{BE1}	108	4 V	"	$V_{\overline{S}3}$													1,2,3	11 to 10	E13	"	V_{BE1} = E13	"		1.2	V

TABLE III. Group A inspection for device type 01 – Continued.

Subgroup	Symbol	Test no.	1	2	17	12	15	16	4	3	5	8	9	10	11	7	6	Relays ener-gized	Measured terminal			Equations	Note	Test limits		Unit
			V_{S1}	V_{S2}	V_{S3}	1B	1C	1E	2B	2E	2C	V_{CC}	G	1A	1Y	2A	2Y		No.	Value	Unit			Min	Max	
3	V_{BE2}	109	6 V	$V_{\overline{S}2}$	$V_{\overline{S}3}$													1,2	12 to 16	E14	V	V_{BE2} = E14	See figures 3 and 4		1.4	V
T_A =	V_{BE2}	110	6 V	"	"													1,2,3	11 to 10	E15	"	V_{BE2} = E15	for test		1.4	V
-55°C	V_{CESAT1}	111	4 V	"	"													1,2	5 to 6	E16	"	V_{CESAT1} = E16	circuit		0.5	"
	V_{CESAT1}	112	4 V	"	"													1,2,3	10 to 9	E17	"	V_{CESAT1} = E17	and waveforms		0.5	"
	V_{CESAT2}	113	6 V	"	"													1,2	5 to 6	E18	"	V_{CESAT2} = E18	"		0.8	"
	V_{CESAT2}	114	6 V	"	"													1,2,3	10 to 9	E19	"	V_{CESAT2} = E19	"		0.8	"
	V_{CB01}	115				GND	100 μA											3	15 to 12	E20	"	V_{CB01} = E20	See figure 3 for test	35		"
	V_{CB01}	116							GND		100 μA							4	5 to 3	E21	"	V_{CB01} = E21	circuit	35		"
	V_{CER1}	117					100 μA	GND										4	15 to 16	E22	"	V_{CER1} = E22	"	35		"
	V_{CER1}	118								GND	100 μA							3,4	5 to 3	E23	"	V_{CER1} = E23	"	35		"
	V_{EBO}	119				GND		100 μA										3,4	16 to 12	E24	"	V_{EBO} = E24	"	5		"
	V_{EBO}	120							GND	100 μA								4	3 to 4	E25	"	V_{EBO} = E25	"	5		"

TABLE III. Group A inspection for device type 01 – Continued.

Subgroup	Symbol	Test no.	1	2	3	4	5	6	7	8	9	10	11	12	13	14	Notes	Measured terminal	Test limits		Unit
			G	1A	1Y	1B	1C	1E	GND	Sub	2E	2C	2B	2Y	2A	V_{CC}			Min	Max	
9	t_D	121				A	B	GND		GND							See figure 8	5		15	ns
T_A =	t_D	122								"	GND	B	A				for test	10		"	"
+25°C	t_S	123				A	B	GND		"							circuit and	5		"	"
	t_S	124								"	GND	B	A				waveforms	10		"	"
	t_R	125				A	B	GND		"							"	5		20	"
	t_R	126								"	GND	B	A				"	10		20	"
	t_F	127				A	B	GND		"							"	5		15	"
	t_F	128								"	GND	B	A				"	10		15	"
	t_{PLH1}	129	3 V	IN	OUT					"						4.5 V	See figure 6	2 to 3		30	"
	"	130	IN	3 V	OUT					"						"	for test	1 to 3		"	"
	"	131	3 V							"				OUT	IN	"	circuit and	13 to 12		"	"
	"	132	IN							"				OUT	3 V	"	waveforms	1 to 12		"	"
	t_{PHL1}	133	3 V	IN	OUT					"						4.5 V	"	2 to 3		15	"
	"	134	IN	3 V	OUT					"						"	"	1 to 3		"	"
	"	135	3 V							"				OUT	IN	"	"	13 to 12		"	"
	"	136	IN							"				OUT	3 V	"	"	1 to 12		"	"
	t_{PLH2}	137	3 V	IN	Connect to 1B		OUT			"						4.5 V	See figure 7	2 to 5		30	"
	"	138	IN	3 V	Connect to 1B		OUT			"						"	for test	1 to 5		"	"
	"	139	3 V							"		OUT		Connect to 2B	IN	"	circuit and	13 to 10		"	"
	"	140	IN							"		OUT		Connect to 2B	3 V	"	waveforms	1 to 10		"	"
	t_{PHL2}	141	3 V	IN	Connect to 1B		OUT			"						4.5 V	"	2 to 5		30	"
	"	142	IN	3 V	Connect to 1B		OUT			"						"	"	1 to 5		"	"
	"	143	3 V							"		OUT		Connect to 2B		"	"	13 to 10		"	"
	"	144	IN							"		OUT		Connect to 2B		"	"	1 to 10		"	"
	t_{TLH1}	145	3 V	IN	Connect to 1B		OUT			"						"	"	5		15	"
	t_{TLH1}	146	3 V							"		OUT		Connect to 2B	IN	"	"	10		"	"
	t_{THL1}	147	3 V	IN	Connect to 1B		OUT			"						"	"	5		"	"
	t_{THL1}	148	3 V							"		OUT		Connect to 2B	IN	"	"	10		"	"

TABLE III. Group A inspection for device type 01 – Continued.

Subgroup	Symbol	Test no.	1	2	3	4	5	6	7	8	9	10	11	12	13	14	Notes	Measured terminal	Test limits		Unit
			G	1A	1Y	1B	1C	1E	GND	Sub	2E	2C	2B	2Y	2A	V_{CC}			Min	Max	
10	t_D	149				A	B	GND		GND							See figure 8	5		22.5	ns
T_A =	t_D	150								"	GND	B	A				for test	10		"	"
+125°C	t_S	151				A	B	GND		"							circuit and	5		"	"
	t_S	152								"	GND	B	A				waveforms	10		"	"
	t_R	153				A	B	GND		"							"	5		30	"
	t_R	154								"	GND	B	A				"	10		30	"
	t_F	155				A	B	GND		"							"	5		22.5	"
	t_F	156								"	GND	B	A				"	10		22.5	"
	t_{PLH1}	157	3 V	IN	OUT					"						4.5 V	See figure 6	2 to 3		45	"
	"	158	IN	3 V	OUT					"						"	for test	1 to 3		"	"
	"	159	3 V							"				OUT	IN	"	circuit and	13 to 12		"	"
	"	160	IN							"				OUT	3 V	"	waveforms	1 to 12		"	"
	t_{PHL1}	161	3 V	IN	OUT					"						4.5 V	"	2 to 3		22.5	"
	"	162	IN	3 V	OUT					"						"	"	1 to 3		"	"
	"	163	3 V							"				OUT	IN	"	"	13 to 12		"	"
	"	164	IN							"				OUT	3 V	"	"	1 to 12		"	"
	t_{PLH2}	165	3 V	IN	Connect to 1B		OUT			"						4.5 V	See figure 7	2 to 5		45	"
	"	166	IN	3 V	Connect to 1B		OUT			"						"	for test	1 to 5		"	"
	"	167	3 V							"		OUT		Connect to 2B	IN	"	circuit and	13 to 10		"	"
	"	168	IN							"		OUT		Connect to 2B	3 V	"	waveforms	1 to 10		"	"
	t_{PHL2}	169	3 V	IN	Connect to 1B		OUT			"						4.5 V	"	2 to 5		"	"
	"	170	IN	3 V	Connect to 1B		OUT			"						"	"	1 to 5		"	"
	"	171	3 V							"		OUT		Connect to 2B		"	"	13 to 10		"	"
	"	172	IN							"		OUT		Connect to 2B		"	"	1 to 10		"	"
	t_{TLH1}	173	3 V	IN	Connect to 1B		OUT			"						"	"	5		22.5	"
	t_{TLH1}	174	3 V							"		OUT		Connect to 2B	IN	"	"	10		"	"
	t_{THL1}	175	3 V	IN	Connect to 1B		OUT			"						"	"	5		"	"
	t_{THL1}	176	3 V							"		OUT		Connect to 2B	IN	"	"	10		"	"

TABLE III. Group A inspection for device type 01 – Continued.

Subgroup	Symbol	Test no.	1	2	3	4	5	6	7	8	9	10	11	12	13	14	Notes	Measured terminal	Test limits		Unit
			G	1A	1Y	1B	1C	1E	GND	Sub	2E	2C	2B	2Y	2A	V_{CC}			Min	Max	
11	t_D	177				A	B	GND		GND							See figure 8	5		22.5	ns
T_A =	t_D	178								"	GND	B	A				for test	10		"	"
-55°C	t_S	179				A	B	GND		"							circuit and	5		"	"
	t_S	180								"	GND	B	A				waveforms	10		"	"
	t_R	181				A	B	GND		"							"	5		30	"
	t_R	182								"	GND	B	A				"	10		30	"
	t_F	183				A	B	GND		"							"	5		22.5	"
	t_F	184								"	GND	B	A				"	10		22.5	"
	t_{PLH1}	185	3 V	IN	OUT					"						4.5 V	See figure 6	2 to 3		45	"
	"	186	IN	3 V	OUT					"						"	for test	1 to 3		"	"
	"	187	3 V							"				OUT	IN	"	circuit and	13 to 12		"	"
	"	188	IN							"				OUT	3 V	"	waveforms	1 to 12		"	"
	t_{PHL1}	189	3 V	IN	OUT					"						4.5 V	"	2 to 3		22.5	"
	"	190	IN	3 V	OUT					"						"	"	1 to 3		"	"
	"	191	3 V							"				OUT	IN	"	"	13 to 12		"	"
	"	192	IN							"				OUT	3 V	"	"	1 to 12		"	"
	t_{PLH2}	193	3 V	IN	Connect to 1B		OUT			"						4.5 V	See figure 7	2 to 5		45	"
	"	194	IN	3 V	Connect to 1B		OUT			"						"	for test	1 to 5		"	"
	"	195	3 V							"		OUT		Connect to 2B	IN	"	circuit and	13 to 10		"	"
	"	196	IN							"		OUT		Connect to 2B	3 V	"	waveforms	1 to 10		"	"
	t_{PHL2}	197	3 V	IN	Connect to 1B		OUT			"						4.5 V	"	2 to 5		"	"
	"	198	IN	3 V	Connect to 1B		OUT			"						"	"	1 to 5		"	"
	"	199	3 V							"		OUT		Connect to 2B		"	"	13 to 10		"	"
	"	200	IN							"		OUT		Connect to 2B		"	"	1 to 10		"	"
	t_{TLH1}	201	3 V	IN	Connect to 1B		OUT			"						"	"	5		22.5	"
	t_{TLH1}	202	3 V							"		OUT		Connect to 2B	IN	"	"	10		"	"
	t_{THL1}	203	3 V	IN	Connect to 1B		OUT			"						"	"	5		"	"
	t_{THL1}	204	3 V							"		OUT		Connect to 2B	IN	"	"	10		"	"

TABLE III. Group A inspection for device type 02.

Subgroup	Symbol	Test no.	1 1A	2 1B	3 1Y	4 GND	5 2Y	6 2A	7 2B	8 V_{CC}	Notes	Measured terminal	Test limits Min	Test limits Max	Unit
1	V_{IC}	1	-12 mA	4.5 V		GND				4.5 V	See figure	1 to 4		-1.5	V
T_A =	"	2	4.5 V	-12 mA		"				"	5 for test	2 to 4		"	"
+25°C	"	3				"		-12 mA	4.5 V	"	circuit	6 to 4		"	"
	"	4				"		4.5 V	-12 mA	"	"	7 to 4		"	"
	I_{IH1}	5	2.4 V	GND		"				5.5 V	"	1 to 4		40	µA
	"	6	GND	2.4 V		"				"	"	2 to 4		"	"
	"	7				"		2.4 V	GND	"	"	6 to 4		"	"
	"	8				"		GND	2.4 V	"	"	7 to 4		"	"
	I_{IH2}	9	5.5 V	GND		"				"	"	1 to 4		1	mA
	"	10	GND	5.5 V		"				"	"	2 to 4		"	"
	"	11				"		5.5 V	GND	"	"	6 to 4		"	"
	"	12				"		GND	5.5 V	"	"	7 to 4		"	"
	I_{IL1}	13	0.4 V	5.5 V		"				"	"	1 to 4		-1.6	mA
	"	14	5.5 V	0.4 V		"				"	"	2 to 4		"	"
	"	15				"		0.4 V	5.5 V	"	"	6 to 4		"	"
	"	16				"		5.5 V	0.4 V	"	"	7 to 4		"	"
	I_{CCH2}	17	5.5 V	5.5 V		"		5.5 V	5.5 V	"	"	8		11	"
	I_{CCL2}	18	GND	GND		"		GND	GND	"	"	8		65	"
	V_{OL1}	19	0.8 V	0.8 V	100 mA	"				4.5 V	"	3 to 4		0.5	V
	V_{OL1}	20				"	100 mA	0.8 V	0.8 V	"	"	5 to 4		0.5	"
	V_{OL5}	21	0.8 V	0.8 V	300 mA	"				"	"	3 to 4		0.8	"
	V_{OL5}	22				"	300 mA	0.8 V	0.8 V	"	"	5 to 4		0.8	"
	I_{OH1}	23	2 V	2 V	30 V	"				"	"	3		300	µA
	I_{OH1}	24				"	30 V	2 V	2 V	"	"	5		300	"

TABLE III. Group A inspection for device type 02 – Continued.

Subgroup	Symbol	Test no.	1 1A	2 1B	3 1Y	4 GND	5 2Y	6 2A	7 2B	8 V_{CC}	Notes	Measured terminal	Test limits Min	Test limits Max	Unit
2	V_{IC}	25	-12 mA	4.5 V		GND				4.5 V	See figure	1 to 4		-1.5	V
T_A =	"	26	4.5 V	-12 mA		"				"	5 for test	2 to 4		"	"
+125°C	"	27				"		-12 mA	4.5 V	"	circuit	6 to 4		"	"
	"	28				"		4.5 V	-12 mA	"	"	7 to 4		"	"
	I_{IH1}	29	2.4 V	GND		"				5.5 V	"	1 to 4		40	µA
	"	30	GND	2.4 V		"				"	"	2 to 4		"	"
	"	31				"		2.4 V	GND	"	"	6 to 4		"	"
	"	32				"		GND	2.4 V	"	"	7 to 4		"	"
	I_{IH2}	33	5.5 V	GND		"				"	"	1 to 4		1	mA
	"	34	GND	5.5 V		"				"	"	2 to 4		"	"
	"	35				"		5.5 V	GND	"	"	6 to 4		"	"
	"	36				"		GND	5.5 V	"	"	7 to 4		"	"
	I_{IL1}	37	0.4 V	5.5 V		"				"	"	1 to 4		-1.6	mA
	"	38	5.5 V	0.4 V		"				"	"	2 to 4		"	"
	"	39				"		0.4 V	5.5 V	"	"	6 to 4		"	"
	"	40				"		5.5 V	0.4 V	"	"	7 to 4		"	"
	I_{CCH2}	41	5.5 V	5.5 V		"		5.5 V	5.5 V	"	"	8		11	"
	I_{CCL2}	42	GND	GND		"		GND	GND	"	"	8		65	"
	V_{OL1}	43	0.8 V	0.8 V	100 mA	"				4.5 V	"	3 to 4		0.5	V
	V_{OL1}	44				"	100 mA	0.8 V	0.8 V	"	"	5 to 4		0.5	"
	V_{OL5}	45	0.8 V	0.8 V	300 mA	"				"	"	3 to 4		0.8	"
	V_{OL5}	46				"	300 mA	0.8 V	0.8 V	"	"	5 to 4		0.8	"
	I_{OH1}	47	2 V	2 V	30 V	"				"	"	3		300	µA
	I_{OH1}	48				"	30 V	2 V	2 V	"	"	5		300	"

TABLE III. Group A inspection for device type 02 – Continued.

Subgroup	Symbol	Test no.	1 1A	2 1B	3 1Y	4 GND	5 2Y	6 2A	7 2B	8 V_{CC}	Notes	Measured terminal	Test limits Min	Test limits Max	Unit
3	V_{IC}	49	-12 mA	4.5 V		GND				4.5 V	See figure	1 to 4		-1.5	V
T_A =	"	50	4.5 V	-12 mA		"				"	5 for test	2 to 4		"	"
-55°C	"	51				"		-12 mA	4.5 V	"	circuit	6 to 4		"	"
	"	52				"		4.5 V	-12 mA	"	"	7 to 4		"	"
	I_{IH1}	53	2.4 V	GND		"				5.5 V	"	1 to 4		40	µA
	"	54	GND	2.4 V		"				"	"	2 to 4		"	"
	"	55				"		2.4 V	GND	"	"	6 to 4		"	"
	"	56				"		GND	2.4 V	"	"	7 to 4		"	"
	I_{IH2}	57	5.5 V	GND		"				"	"	1 to 4		1	mA
	"	58	GND	5.5 V		"				"	"	2 to 4		"	"
	"	59				"		5.5 V	GND	"	"	6 to 4		"	"
	"	60				"		GND	5.5 V	"	"	7 to 4		"	"
	I_{IL1}	61	0.4 V	5.5 V		"				"	"	1 to 4		-1.6	mA
	"	62	5.5 V	0.4 V		"				"	"	2 to 4		"	"
	"	63				"		0.4 V	5.5 V	"	"	6 to 4		"	"
	"	64				"		5.5 V	0.4 V	"	"	7 to 4		"	"
	I_{CCH2}	65	5.5 V	5.5 V		"		5.5 V	5.5 V	"	"	8		11	"
	I_{CCL2}	66	GND	GND		"		GND	GND	"	"	8		65	"
	V_{OL1}	67	0.8 V	0.8 V	100 mA	"				4.5 V	"	3 to 4		0.5	V
	V_{OL1}	68				"	100 mA	0.8 V	0.8 V	"	"	5 to 4		0.5	"
	V_{OL5}	69	0.8 V	0.8 V	300 mA	"				"	"	3 to 4		0.8	"
	V_{OL5}	70				"	300 mA	0.8 V	0.8 V	"	"	5 to 4		0.8	"
	I_{OH1}	71	2 V	2 V	30 V	"				"	"	3		300	µA
	I_{OH1}	72				"	30 V	2 V	2 V	"	"	5		300	"

TABLE III. Group A inspection for device type 02 – Continued.

Subgroup	Symbol	Test no.	1 1A	2 1B	3 1Y	4 GND	5 2Y	6 2A	7 2B	8 V_{CC}	Notes	Measured terminal	Test limits Min	Test limits Max	Unit
9	t_{PLH}	73	IN	3 V	OUT	GND				4.5 V	See figure 9	1 to 3		30	ns
T_A =	"	74	3 V	IN	OUT	"				"	for test	2 to 3		"	"
+25°C	"	75				"	OUT	IN	3 V	"	circuit and	6 to 5		"	"
	"	76				"	OUT	3 V	IN	"	waveforms	7 to 5		"	"
	t_{PHL}	77	IN	3 V	OUT	"				4.5 V	"	1 to 3		30	"
	"	78	3 V	IN	OUT	"				"	"	2 to 3		"	"
	"	79				"	OUT	IN	3 V	"	"	6 to 5		"	"
	"	80				"	OUT	3 V	IN	"	"	7 to 5		"	"
	t_{TLH}	81	IN	IN	OUT	"				"	"	3		14	"
	t_{TLH}	82				"	OUT	IN	IN	"	"	5		14	"
	t_{THL}	83	IN	IN	OUT	"				"	"	3		20	"
	t_{THL}	84				"	OUT	IN	IN	"	"	5		20	"
10	t_{PLH}	85	IN	3 V	OUT	GND				4.5 V	"	1 to 3		45	ns
T_A =	"	86	3 V	IN	OUT	"				"	"	2 to 3		"	"
+125°C	"	87				"	OUT	IN	3 V	"	"	6 to 5		"	"
	"	88				"	OUT	3 V	IN	"	"	7 to 5		"	"
	t_{PHL}	89	IN	3 V	OUT	"				4.5 V	"	1 to 3		"	"
	"	90	3 V	IN	OUT	"				"	"	2 to 3		"	"
	"	91				"	OUT	IN	3 V	"	"	6 to 5		"	"
	"	92				"	OUT	3 V	IN	"	"	7 to 5		"	"
	t_{TLH}	93	IN	IN	OUT	"				"	"	3		18.5	"
	t_{TLH}	94				"	OUT	IN	IN	"	"	5		18.5	"
	t_{THL}	95	IN	IN	OUT	"				"	"	3		25	"
	t_{THL}	96				"	OUT	IN	IN	"	"	5		25	"

TABLE III. Group A inspection for device type 02 – Continued.

Subgroup	Symbol	Test no.	1 1A	2 1B	3 1Y	4 GND	5 2Y	6 2A	7 2B	8 V_{CC}	Notes	Measured terminal	Test limits Min	Test limits Max	Unit
11	t_{PLH}	97	IN	3 V	OUT	GND				4.5 V	See figure 9	1 to 3		45	ns
T_A =	"	98	3 V	IN	OUT	"				"	for test	2 to 3		"	"
-55°C	"	99				"	OUT	IN	3 V	"	circuit and	6 to 5		"	"
	"	100				"	OUT	3 V	IN	"	waveforms	7 to 5		"	"
	t_{PHL}	101	IN	3 V	OUT	"				4.5 V	"	1 to 3		"	"
	"	102	3 V	IN	OUT	"				"	"	2 to 3		"	"
	"	103				"	OUT	IN	3 V	"	"	6 to 5		"	"
	"	104				"	OUT	3 V	IN	"	"	7 to 5		"	"
	t_{TLH}	105	IN	IN	OUT	"				"	"	3		18.5	"
	t_{TLH}	106				"	OUT	IN	IN	"	"	5		18.5	"
	t_{THL}	107	IN	IN	OUT	"				"	"	3		25	"
	t_{THL}	108				"	OUT	IN	IN	"	"	5		25	"

TABLE III. Group A inspection for device type 03.

Subgroup	Symbol	Test no.	1 1A	2 1B	3 1Y	4 GND	5 2Y	6 2A	7 2B	8 V_{CC}	Notes	Measured terminal	Test limits Min	Test limits Max	Unit
1	V_{IC}	1	-12 mA	4.5 V		GND				4.5 V	See figure	1 to 4		-1.5	V
T_A =	"	2	4.5 V	-12 mA		"				"	5 for test	2 to 4		"	"
+25°C	"	3				"		-12 mA	4.5 V	"	circuit	6 to 4		"	"
	"	4				"		4.5 V	-12 mA	"	"	7 to 4		"	"
	I_{IH1}	5	2.4 V	GND		"				5.5 V	"	1 to 4		40	µA
	"	6	GND	2.4 V		"				"	"	2 to 4		"	"
	"	7				"		2.4 V	GND	"	"	6 to 4		"	"
	"	8				"		GND	2.4 V	"	"	7 to 4		"	"
	I_{IH2}	9	5.5 V	GND		"				"	"	1 to 4		1	mA
	"	10	GND	5.5 V		"				"	"	2 to 4		"	"
	"	11				"		5.5 V	GND	"	"	6 to 4		"	"
	"	12				"		GND	5.5 V	"	"	7 to 4		"	"
	I_{IL1}	13	0.4 V	5.5 V		"				"	"	1 to 4		-1.6	mA
	"	14	5.5 V	0.4 V		"				"	"	2 to 4		"	"
	"	15				"		0.4 V	5.5 V	"	"	6 to 4		"	"
	"	16				"		5.5 V	0.4 V	"	"	7 to 4		"	"
	I_{CCH4}	17	GND	GND		"		GND	GND	"	"	8		14	"
	I_{CCL4}	18	5.5 V	5.5 V		"		5.5 V	5.5 V	"	"	8		71	"
	V_{OL2}	19	2 V	2 V	100 mA	"				4.5 V	"	3 to 4		0.5	V
	V_{OL2}	20				"	100 mA	2 V	2 V	"	"	5 to 4		0.5	"
	V_{OL6}	21	2 V	2 V	300 mA	"				"	"	3 to 4		0.8	"
	V_{OL6}	22				"	300 mA	2 V	2 V	"	"	5 to 4		0.8	"
	I_{OH2}	23	0.8 V	4.5 V	30 V	"				"	"	3		300	µA
	I_{OH2}	24				"	30 V	0.8 V	4.5 V	"	"	5		300	"

TABLE III. Group A inspection for device type 03 – Continued.

Subgroup	Symbol	Test no.	1 1A	2 1B	3 1Y	4 GND	5 2Y	6 2A	7 2B	8 V_{CC}	Notes	Measured terminal	Test limits Min	Test limits Max	Unit
2	V_{IC}	25	-12 mA	4.5 V		GND				4.5 V	See figure	1 to 4		-1.5	V
T_A =	"	26	4.5 V	-12 mA		"				"	5 for test	2 to 4		"	"
+125°C	"	27				"		-12 mA	4.5 V	"	circuit	6 to 4		"	"
	"	28				"		4.5 V	-12 mA	"	"	7 to 4		"	"
	I_{IH1}	29	2.4 V	GND		"				5.5 V	"	1 to 4		40	µA
	"	30	GND	2.4 V		"				"	"	2 to 4		"	"
	"	31				"		2.4 V	GND	"	"	6 to 4		"	"
	"	32				"		GND	2.4 V	"	"	7 to 4		"	"
	I_{IH2}	33	5.5 V	GND		"				"	"	1 to 4		1	mA
	"	34	GND	5.5 V		"				"	"	2 to 4		"	"
	"	35				"		5.5 V	GND	"	"	6 to 4		"	"
	"	36				"		GND	5.5 V	"	"	7 to 4		"	"
	I_{IL1}	37	0.4 V	5.5 V		"				"	"	1 to 4		-1.6	mA
	"	38	5.5 V	0.4 V		"				"	"	2 to 4		"	"
	"	39				"		0.4 V	5.5 V	"	"	6 to 4		"	"
	"	40				"		5.5 V	0.4 V	"	"	7 to 4		"	"
	I_{CCH4}	41	GND	GND		"		GND	GND	"	"	8		14	"
	I_{CCL4}	42	5.5 V	5.5 V		"		5.5 V	5.5 V	"	"	8		71	"
	V_{OL2}	43	2 V	2 V	100 mA	"				4.5 V	"	3 to 4		0.5	V
	V_{OL2}	44				"	100 mA	2 V	2 V	"	"	5 to 4		0.5	"
	V_{OL6}	45	2 V	2 V	300 mA	"				"	"	3 to 4		0.8	"
	V_{OL6}	46				"	300 mA	2 V	2 V	"	"	5 to 4		0.8	"
	I_{OH2}	47	0.8 V	4.5 V	30 V	"				"	"	3		300	µA
	I_{OH2}	48				"	30 V	0.8 V	4.5 V	"	"	5		300	"

TABLE III. Group A inspection for device type 03 – Continued.

Subgroup	Symbol	Test no.	1 1A	2 1B	3 1Y	4 GND	5 2Y	6 2A	7 2B	8 V_{CC}	Notes	Measured terminal	Test limits Min	Test limits Max	Unit
3	V_{IC}	49	-12 mA	4.5 V		GND				4.5 V	See figure	1 to 4		-1.5	V
T_A =	"	50	4.5 V	-12 mA		"				"	5 for test	2 to 4		"	"
-55°C	"	51				"		-12 mA	4.5 V	"	circuit	6 to 4		"	"
	"	52				"		4.5 V	-12 mA	"	"	7 to 4		"	"
	I_{IH1}	53	2.4 V	GND		"				5.5 V	"	1 to 4		40	µA
	"	54	GND	2.4 V		"				"	"	2 to 4		"	"
	"	55				"		2.4 V	GND	"	"	6 to 4		"	"
	"	56				"		GND	2.4 V	"	"	7 to 4		"	"
	I_{IH2}	57	5.5 V	GND		"				"	"	1 to 4		1	mA
	"	58	GND	5.5 V		"				"	"	2 to 4		"	"
	"	59				"		5.5 V	GND	"	"	6 to 4		"	"
	"	60				"		GND	5.5 V	"	"	7 to 4		"	"
	I_{IL1}	61	0.4 V	5.5 V		"				"	"	1 to 4		-1.6	mA
	"	62	5.5 V	0.4 V		"				"	"	2 to 4		"	"
	"	63				"		0.4 V	5.5 V	"	"	6 to 4		"	"
	"	64				"		5.5 V	0.4 V	"	"	7 to 4		"	"
	I_{CCH4}	65	GND	GND		"		GND	GND	"	"	8		14	"
	I_{CCL4}	66	5.5 V	5.5 V		"		5.5 V	5.5 V	"	"	8		71	"
	V_{OL2}	67	2 V	2 V	100 mA	"				4.5 V	"	3 to 4		0.5	V
	V_{OL2}	68				"	100 mA	2 V	2 V	"	"	5 to 4		0.5	"
	V_{OL6}	69	2 V	2 V	300 mA	"				"	"	3 to 4		0.8	"
	V_{OL6}	70				"	300 mA	2 V	2 V	"	"	5 to 4		0.8	"
	I_{OH2}	71	0.8 V	4.5 V	30 V	"				"	"	3		300	µA
	I_{OH2}	72				"	30 V	0.8 V	4.5 V	"	"	5		300	"

TABLE III. Group A inspection for device type 03 – Continued.

Subgroup	Symbol	Test no.	1 1A	2 1B	3 1Y	4 GND	5 2Y	6 2A	7 2B	8 V_{CC}	Notes	Measured terminal	Test limits Min	Test limits Max	Unit
9	t_{PLH}	73	IN	3 V	OUT	GND				4.5 V	See figure 9	1 to 3		35	ns
T_A =	"	74	3 V	IN	OUT	"				"	for test	2 to 3		"	"
+25°C	"	75				"	OUT	IN	3 V	"	circuit and	6 to 5		"	"
	"	76				"	OUT	3 V	IN	"	waveforms	7 to 5		"	"
	t_{PHL}	77	IN	3 V	OUT	"				4.5 V	"	1 to 3		35	"
	"	78	3 V	IN	OUT	"				"	"	2 to 3		"	"
	"	79				"	OUT	IN	3 V	"	"	6 to 5		"	"
	"	80				"	OUT	3 V	IN	"	"	7 to 5		"	"
	t_{TLH}	81	IN	IN	OUT	"				"	"	3		14	"
	t_{TLH}	82				"	OUT	IN	IN	"	"	5		14	"
	t_{THL}	83	IN	IN	OUT	"				"	"	3		20	"
	t_{THL}	84				"	OUT	IN	IN	"	"	5		20	"
10	t_{PLH}	85	IN	3 V	OUT	GND				4.5 V	"	1 to 3		55	ns
T_A =	"	86	3 V	IN	OUT	"				"	"	2 to 3		"	"
+125°C	"	87				"	OUT	IN	3 V	"	"	6 to 5		"	"
	"	88				"	OUT	3 V	IN	"	"	7 to 5		"	"
	t_{PHL}	89	IN	3 V	OUT	"				4.5 V	"	1 to 3		55	"
	"	90	3 V	IN	OUT	"				"	"	2 to 3		"	"
	"	91				"	OUT	IN	3 V	"	"	6 to 5		"	"
	"	92				"	OUT	3 V	IN	"	"	7 to 5		"	"
	t_{TLH}	93	IN	IN	OUT	"				"	"	3		18.5	"
	t_{TLH}	94				"	OUT	IN	IN	"	"	5		18.5	"
	t_{THL}	95	IN	IN	OUT	"				"	"	3		25	"
	t_{THL}	96				"	OUT	IN	IN	"	"	5		25	"

TABLE III. Group A inspection for device type 03 – Continued.

Subgroup	Symbol	Test no.	1 1A	2 1B	3 1Y	4 GND	5 2Y	6 2A	7 2B	8 V_{CC}	Notes	Measured terminal	Test limits Min	Test limits Max	Unit
11	t_{PLH}	97	IN	3 V	OUT	GND				4.5 V	See figure 9	1 to 3		55	ns
T_A =	"	98	3 V	IN	OUT	"				"	for test	2 to 3		"	"
-55°C	"	99				"	OUT	IN	3 V	"	circuit and	6 to 5		"	"
	"	100				"	OUT	3 V	IN	"	waveforms	7 to 5		"	"
	t_{PHL}	101	IN	3 V	OUT	"				4.5 V	"	1 to 3		"	"
	"	102	3 V	IN	OUT	"				"	"	2 to 3		"	"
	"	103				"	OUT	IN	3 V	"	"	6 to 5		"	"
	"	104				"	OUT	3 V	IN	"	"	7 to 5		"	"
	t_{TLH}	105	IN	IN	OUT	"				"	"	3		18.5	"
	t_{TLH}	106				"	OUT	IN	IN	"	"	5		18.5	"
	t_{THL}	107	IN	IN	OUT	"				"	"	3		25	"
	t_{THL}	108				"	OUT	IN	IN	"	"	5		25	"

TABLE III. Group A inspection for device type 04.

Subgroup	Symbol	Test no.	1 1A	2 1B	3 1Y	4 GND	5 2Y	6 2A	7 2B	8 V_{CC}	Notes	Measured terminal	Test limits Min	Test limits Max	Unit
1	V_{IC}	1	-12 mA	4.5 V		GND				4.5 V	See figure	1 to 4		-1.5	V
T_A =	"	2	4.5 V	-12 mA		"				"	5 for test	2 to 4		"	"
+25°C	"	3				"		-12 mA	4.5 V	"	circuit	6 to 4		"	"
	"	4				"		4.5 V	-12 mA	"	"	7 to 4		"	"
	I_{IH1}	5	2.4 V	GND		"				5.5 V	"	1 to 4		40	µA
	"	6	GND	2.4 V		"				"	"	2 to 4		"	"
	"	7				"		2.4 V	GND	"	"	6 to 4		"	"
	"	8				"		GND	2.4 V	"	"	7 to 4		"	"
	I_{IH2}	9	5.5 V	GND		"				"	"	1 to 4		1	mA
	"	10	GND	5.5 V		"				"	"	2 to 4		"	"
	"	11				"		5.5 V	GND	"	"	6 to 4		"	"
	"	12				"		GND	5.5 V	"	"	7 to 4		"	"
	I_{IL1}	13	0.4 V	GND		"				"	"	1 to 4		-1.6	mA
	"	14	GND	0.4 V		"				"	"	2 to 4		"	"
	"	15				"		0.4 V	GND	"	"	6 to 4		"	"
	"	16				"		GND	0.4 V	"	"	7 to 4		"	"
	I_{CCH2}	17	5.5 V	5.5 V		"		5.5 V	5.5 V	"	"	8		11	"
	I_{CCL3}	18	GND	GND		"		GND	GND	"	"	8		68	"
	V_{OL3}	19	0.8 V	0.8 V	100 mA	"				4.5 V	"	3 to 4		0.5	V
	V_{OL3}	20				"	100 mA	0.8 V	0.8 V	"	"	5 to 4		0.5	"
	V_{OL7}	21	0.8 V	0.8 V	300 mA	"				"	"	3 to 4		0.8	"
	V_{OL7}	22				"	300 mA	0.8 V	0.8 V	"	"	5 to 4		0.8	"
	I_{OH3}	23	2 V	GND	30 V	"				"	"	3		300	µA
	I_{OH3}	24				"	30 V	2 V	GND	"	"	5		300	"

TABLE III. Group A inspection for device type 04 – Continued.

Subgroup	Symbol	Test no.	1 1A	2 1B	3 1Y	4 GND	5 2Y	6 2A	7 2B	8 V_{CC}	Notes	Measured terminal	Test limits Min	Test limits Max	Unit
2	V_{IC}	25	-12 mA	4.5 V		GND				4.5 V	See figure	1 to 4		-1.5	V
T_A =	"	26	4.5 V	-12 mA		"				"	5 for test	2 to 4		"	"
+125°C	"	27				"		-12 mA	4.5 V	"	circuit	6 to 4		"	"
	"	28				"		4.5 V	-12 mA	"	"	7 to 4		"	"
	I_{IH1}	29	2.4 V	GND		"				5.5 V	"	1 to 4		40	µA
	"	30	GND	2.4 V		"				"	"	2 to 4		"	"
	"	31				"		2.4 V	GND	"	"	6 to 4		"	"
	"	32				"		GND	2.4 V	"	"	7 to 4		"	"
	I_{IH2}	33	5.5 V	GND		"				"	"	1 to 4		1	mA
	"	34	GND	5.5 V		"				"	"	2 to 4		"	"
	"	35				"		5.5 V	GND	"	"	6 to 4		"	"
	"	36				"		GND	5.5 V	"	"	7 to 4		"	"
	I_{IL1}	37	0.4 V	GND		"				"	"	1 to 4		-1.6	mA
	"	38	GND	0.4 V		"				"	"	2 to 4		"	"
	"	39				"		0.4 V	GND	"	"	6 to 4		"	"
	"	40				"		GND	0.4 V	"	"	7 to 4		"	"
	I_{CCH2}	41	5.5 V	5.5 V		"		5.5 V	5.5 V	"	"	8		11	"
	I_{CCL3}	42	GND	GND		"		GND	GND	"	"	8		65	"
	V_{OL3}	43	0.8 V	0.8 V	100 mA	"				4.5 V	"	3 to 4		0.5	V
	V_{OL3}	44				"	100 mA	0.8 V	0.8 V	"	"	5 to 4		0.5	"
	V_{OL7}	45	0.8 V	0.8 V	300 mA	"				"	"	3 to 4		0.8	"
	V_{OL7}	46				"	300 mA	0.8 V	0.8 V	"	"	5 to 4		0.8	"
	I_{OH3}	47	2 V	GND	30 V	"				"	"	3		300	µA
	I_{OH3}	48				"	30 V	2 V	GND	"	"	5		300	"

TABLE III. Group A inspection for device type 04 – Continued.

Subgroup	Symbol	Test no.	1 1A	2 1B	3 1Y	4 GND	5 2Y	6 2A	7 2B	8 V_{CC}	Notes	Measured terminal	Test limits Min	Test limits Max	Unit
3	V_{IC}	49	-12 mA	4.5 V		GND				4.5 V	See figure	1 to 4		-1.5	V
T_A =	"	50	4.5 V	-12 mA		"				"	5 for test	2 to 4		"	"
-55°C	"	51				"		-12 mA	4.5 V	"	circuit	6 to 4		"	"
	"	52				"		4.5 V	-12 mA	"	"	7 to 4		"	"
	I_{IH1}	53	2.4 V	GND		"				5.5 V	"	1 to 4		40	µA
	"	54	GND	2.4 V		"				"	"	2 to 4		"	"
	"	55				"		2.4 V	GND	"	"	6 to 4		"	"
	"	56				"		GND	2.4 V	"	"	7 to 4		"	"
	I_{IH2}	57	5.5 V	GND		"				"	"	1 to 4		1	mA
	"	58	GND	5.5 V		"				"	"	2 to 4		"	"
	"	59				"		5.5 V	GND	"	"	6 to 4		"	"
	"	60				"		GND	5.5 V	"	"	7 to 4		"	"
	I_{IL1}	61	0.4 V	GND		"				"	"	1 to 4		-1.6	mA
	"	62	GND	0.4 V		"				"	"	2 to 4		"	"
	"	63				"		0.4 V	GND	"	"	6 to 4		"	"
	"	64				"		GND	0.4 V	"	"	7 to 4		"	"
	I_{CCH2}	65	5.5 V	5.5 V		"		5.5 V	5.5 V	"	"	8		11	"
	I_{CCL3}	66	GND	GND		"		GND	GND	"	"	8		65	"
	V_{OL3}	67	0.8 V	0.8 V	100 mA	"				4.5 V	"	3 to 4		0.5	V
	V_{OL3}	68				"	100 mA	0.8 V	0.8 V	"	"	5 to 4		0.5	"
	V_{OL7}	69	0.8 V	0.8 V	300 mA	"				"	"	3 to 4		0.8	"
	V_{OL7}	70				"	300 mA	0.8 V	0.8 V	"	"	5 to 4		0.8	"
	I_{OH3}	71	2 V	GND	30 V	"				"	"	3		300	µA
	I_{OH3}	72				"	30 V	2 V	GND	"	"	5		300	"

TABLE III. Group A inspection for device type 04 – Continued.

Subgroup	Symbol	Test no.	1 1A	2 1B	3 1Y	4 GND	5 2Y	6 2A	7 2B	8 V_{CC}	Notes	Measured terminal	Test limits Min	Test limits Max	Unit
9	t_{PLH}	73	IN	GND	OUT	GND				4.5 V	See figure 9	1 to 3		30	ns
T_A =	“	74	GND	IN	OUT	“				“	for test	2 to 3		“	“
+25°C	“	75				“	OUT	IN	GND	“	circuit and	6 to 5		“	“
	“	76				“	OUT	GND	IN	“	waveforms	7 to 5		“	“
	t_{PHL}	77	IN	GND	OUT	“				4.5 V	“	1 to 3		30	“
	“	78	GND	IN	OUT	“				“	“	2 to 3		“	“
	“	79				“	OUT	IN	GND	“	“	6 to 5		“	“
	“	80				“	OUT	GND	IN	“	“	7 to 5		“	“
	t_{TLH}	81	IN	IN	OUT	“				“	“	3		14	“
	t_{TLH}	82				“	OUT	IN	IN	“	“	5		14	“
	t_{THL}	83	IN	IN	OUT	“				“	“	3		20	“
	t_{THL}	84				“	OUT	IN	IN	“	“	5		20	“
10	t_{PLH}	85	IN	GND	OUT	GND				4.5 V	“	1 to 3		45	ns
T_A =	“	86	GND	IN	OUT	“				“	“	2 to 3		“	“
+125°C	“	87				“	OUT	IN	GND	“	“	6 to 5		“	“
	“	88				“	OUT	GND	IN	“	“	7 to 5		“	“
	t_{PHL}	89	IN	GND	OUT	“				4.5 V	“	1 to 3		45	“
	“	90	GND	IN	OUT	“				“	“	2 to 3		“	“
	“	91				“	OUT	IN	GND	“	“	6 to 5		“	“
	“	92				“	OUT	GND	IN	“	“	7 to 5		“	“
	t_{TLH}	93	IN	IN	OUT	“				“	“	3		18.5	“
	t_{TLH}	94				“	OUT	IN	IN	“	“	5		18.5	“
	t_{THL}	95	IN	IN	OUT	“				“	“	3		25	“
	t_{THL}	96				“	OUT	IN	IN	“	“	5		25	“

TABLE III. Group A inspection for device type 04 - Continued.

Subgroup	Symbol	Test no.	1 1A	2 1B	3 1Y	4 GND	5 2Y	6 2A	7 2B	8 V_{CC}	Notes	Measured terminal	Test limits Min	Test limits Max	Unit
11	t_{PLH}	97	IN	GND	OUT	GND				4.5 V	See figure 9	1 to 3		45	ns
T_A =	"	98	GND	IN	OUT	"				"	for test	2 to 3		"	"
-55°C	"	99				"	OUT	IN	GND	"	circuit and	6 to 5		"	"
	"	100				"	OUT	GND	IN	"	waveforms	7 to 5		"	"
	t_{PHL}	101	IN	GND	OUT	"				4.5 V	"	1 to 3		"	"
	"	102	GND	IN	OUT	"				"	"	2 to 3		"	"
	"	103				"	OUT	IN	GND	"	"	6 to 5		"	"
	"	104				"	OUT	GND	IN	"	"	7 to 5		"	"
	t_{TLH}	105	IN	IN	OUT	"				"	"	3		18.5	"
	t_{TLH}	106				"	OUT	IN	IN	"	"	5		18.5	"
	t_{THL}	107	IN	IN	OUT	"				"	"	3		25	"
	t_{THL}	108				"	OUT	IN	IN	"	"	5		25	"

TABLE III. Group A inspection for device type 05.

Subgroup	Symbol	Test no.	1 1A	2 1B	3 1Y	4 GND	5 2Y	6 2A	7 2B	8 V_{CC}	Notes	Measured terminal	Test limits Min	Test limits Max	Unit
1	V_{IC}	1	-12 mA	4.5 V		GND				4.5 V	See figure	1 to 4		-1.5	V
T_A =	"	2	4.5 V	-12 mA		"				"	5 for test	2 to 4		"	"
+25°C	"	3				"		-12 mA	4.5 V	"	circuit	6 to 4		"	"
	"	4				"		4.5 V	-12 mA	"	"	7 to 4		"	"
	I_{IH1}	5	2.4 V	GND		"				5.5 V	"	1 to 4		40	µA
	"	6	GND	2.4 V		"				"	"	2 to 4		"	"
	"	7				"		2.4 V	GND	"	"	6 to 4		"	"
	"	8				"		GND	2.4 V	"	"	7 to 4		"	"
	I_{IH2}	9	5.5 V	GND		"				"	"	1 to 4		1	mA
	"	10	GND	5.5 V		"				"	"	2 to 4		"	"
	"	11				"		5.5 V	GND	"	"	6 to 4		"	"
	"	12				"		GND	5.5 V	"	"	7 to 4		"	"
	I_{IL1}	13	0.4 V	GND		"				"	"	1 to 4		-1.6	mA
	"	14	GND	0.4 V		"				"	"	2 to 4		"	"
	"	15				"		0.4 V	GND	"	"	6 to 4		"	"
	"	16				"		GND	0.4 V	"	"	7 to 4		"	"
	I_{CCH3}	17	GND	GND		"		GND	GND	"	"	8		17	"
	I_{CCL7}	18	5.5 V	5.5 V		"		5.5 V	5.5 V	"	"	8		79	"
	V_{OL4}	19	2 V	2 V	100 mA	"				4.5 V	"	3 to 4		0.5	V
	V_{OL4}	20				"	100 mA	2 V	2 V	"	"	5 to 4		0.5	"
	V_{OL8}	21	2 V	2 V	300 mA	"				"	"	3 to 4		0.8	"
	V_{OL8}	22				"	300 mA	2 V	2 V	"	"	5 to 4		0.8	"
	I_{OH4}	23	0.8 V	0.8 V	30 V	"				"	"	3		300	µA
	I_{OH4}	24				"	30 V	0.8 V	0.8 V	"	"	5		300	"

TABLE III. Group A inspection for device type 05 - Continued.

Subgroup	Symbol	Test no.	1 1A	2 1B	3 1Y	4 GND	5 2Y	6 2A	7 2B	8 V_{CC}	Notes	Measured terminal	Test limits Min	Test limits Max	Unit
2	V_{IC}	25	-12 mA	4.5 V		GND				4.5 V	See figure	1 to 4		-1.5	V
T_A =	"	26	4.5 V	-12 mA		"				"	5 for test	2 to 4		"	"
+125°C	"	27				"		-12 mA	4.5 V	"	circuit	6 to 4		"	"
	"	28				"		4.5 V	-12 mA	"	"	7 to 4		"	"
	I_{IH1}	29	2.4 V	GND		"				5.5 V	"	1 to 4		40	µA
	"	30	GND	2.4 V		"				"	"	2 to 4		"	"
	"	31				"		2.4 V	GND	"	"	6 to 4		"	"
	"	32				"		GND	2.4 V	"	"	7 to 4		"	"
	I_{IH2}	33	5.5 V	GND		"				"	"	1 to 4		1	mA
	"	34	GND	5.5 V		"				"	"	2 to 4		"	"
	"	35				"		5.5 V	GND	"	"	6 to 4		"	"
	"	36				"		GND	5.5 V	"	"	7 to 4		"	"
	I_{IL1}	37	0.4 V	GND		"				"	"	1 to 4		-1.6	mA
	"	38	GND	0.4 V		"				"	"	2 to 4		"	"
	"	39				"		0.4 V	GND	"	"	6 to 4		"	"
	"	40				"		GND	0.4 V	"	"	7 to 4		"	"
	I_{CCH3}	41	GND	GND		"		GND	GND	"	"	8		17	"
	I_{CCL7}	42	5.5 V	5.5 V		"		5.5 V	5.5 V	"	"	8		79	"
	V_{OL4}	43	2 V	2 V	100 mA	"				4.5 V	"	3 to 4		0.5	V
	V_{OL4}	44				"	100 mA	2 V	2 V	"	"	5 to 4		0.5	"
	V_{OL8}	45	2 V	2 V	300 mA	"				"	"	3 to 4		0.8	"
	V_{OL8}	46				"	300 mA	2 V	2 V	"	"	5 to 4		0.8	"
	I_{OH4}	47	0.8 V	0.8 V	30 V	"				"	"	3		300	µA
	I_{OH4}	48				"	30 V	0.8 V	0.8 V	"	"	5		300	"

TABLE III. Group A inspection for device type 05 - Continued.

Subgroup	Symbol	Test no.	1 1A	2 1B	3 1Y	4 GND	5 2Y	6 2A	7 2B	8 V_{CC}	Notes	Measured terminal	Test limits Min	Test limits Max	Unit
3	V_{IC}	49	-12 mA	4.5 V		GND				4.5 V	See figure	1 to 4		-1.5	V
T_A =	"	50	4.5 V	-12 mA		"				"	5 for test	2 to 4		"	"
-55°C	"	51				"		-12 mA	4.5 V	"	circuit	6 to 4		"	"
	"	52				"		4.5 V	-12 mA	"	"	7 to 4		"	"
	I_{IH1}	53	2.4 V	GND		"				5.5 V	"	1 to 4		40	µA
	"	54	GND	2.4 V		"				"	"	2 to 4		"	"
	"	55				"		2.4 V	GND	"	"	6 to 4		"	"
	"	56				"		GND	2.4 V	"	"	7 to 4		"	"
	I_{IH2}	57	5.5 V	GND		"				"	"	1 to 4		1	mA
	"	58	GND	5.5 V		"				"	"	2 to 4		"	"
	"	59				"		5.5 V	GND	"	"	6 to 4		"	"
	"	60				"		GND	5.5 V	"	"	7 to 4		"	"
	I_{IL1}	61	0.4 V	GND		"				"	"	1 to 4		-1.6	mA
	"	62	GND	0.4 V		"				"	"	2 to 4		"	"
	"	63				"		0.4 V	GND	"	"	6 to 4		"	"
	"	64				"		GND	0.4 V	"	"	7 to 4		"	"
	I_{CCH3}	65	GND	GND		"		GND	GND	"	"	8		17	"
	I_{CCL7}	66	5.5 V	5.5 V		"		5.5 V	5.5 V	"	"	8		79	"
	V_{OL4}	67	2 V	2 V	100 mA	"				4.5 V	"	3 to 4		0.5	V
	V_{OL4}	68				"	100 mA	2 V	2 V	"	"	5 to 4		0.5	"
	V_{OL8}	69	2 V	2 V	300 mA	"				"	"	3 to 4		0.8	"
	V_{OL8}	70				"	300 mA	2 V	2 V	"	"	5 to 4		0.8	"
	I_{OH4}	71	0.8 V	0.8 V	30 V	"				"	"	3		300	µA
	I_{OH4}	72				"	30 V	0.8 V	0.8 V	"	"	5		300	"

TABLE III. Group A inspection for device type 05 - Continued.

Subgroup	Symbol	Test no.	1 1A	2 1B	3 1Y	4 GND	5 2Y	6 2A	7 2B	8 V_{CC}	Notes	Measured terminal	Test limits Min	Test limits Max	Unit
9	t_{PLH}	73	IN	GND	OUT	GND				4.5 V	See figure 9	1 to 3		45	ns
T_A =	"	74	GND	IN	OUT	"				"	for test	2 to 3		"	"
+25°C	"	75				"	OUT	IN	GND	"	circuit and	6 to 5		"	"
	"	76				"	OUT	GND	IN	"	waveforms	7 to 5		"	"
	t_{PHL}	77	IN	GND	OUT	"				4.5 V	"	1 to 3		35	"
	"	78	GND	IN	OUT	"				"	"	2 to 3		"	"
	"	79				"	OUT	IN	GND	"	"	6 to 5		"	"
	"	80				"	OUT	GND	IN	"	"	7 to 5		"	"
	t_{TLH}	81	IN	IN	OUT	"				"	"	3		14	"
	t_{TLH}	82				"	OUT	IN	IN	"	"	5		14	"
	t_{THL}	83	IN	IN	OUT	"				"	"	3		20	"
	t_{THL}	84				"	OUT	IN	IN	"	"	5		20	"
10	t_{PLH}	85	IN	GND	OUT	GND				4.5 V	"	1 to 3		75	ns
T_A =	"	86	GND	IN	OUT	"				"	"	2 to 3		"	"
+125°C	"	87				"	OUT	IN	GND	"	"	6 to 5		"	"
	"	88				"	OUT	GND	IN	"	"	7 to 5		"	"
	t_{PHL}	89	IN	GND	OUT	"				4.5 V	"	1 to 3		55	"
	"	90	GND	IN	OUT	"				"	"	2 to 3		"	"
	"	91				"	OUT	IN	GND	"	"	6 to 5		"	"
	"	92				"	OUT	GND	IN	"	"	7 to 5		"	"
	t_{TLH}	93	IN	IN	OUT	"				"	"	3		18.5	"
	t_{TLH}	94				"	OUT	IN	IN	"	"	5		18.5	"
	t_{THL}	95	IN	IN	OUT	"				"	"	3		25	"
	t_{THL}	96				"	OUT	IN	IN	"	"	5		25	"

TABLE III. Group A inspection for device type 05. – Continued.

Subgroup	Symbol	Test no.	1 1A	2 1B	3 1Y	4 GND	5 2Y	6 2A	7 2B	8 V_{CC}	Notes	Measured terminal	Test limits Min	Test limits Max	Unit
11	t_{PLH}	97	IN	GND	OUT	GND				4.5 V	See figure 9	1 to 3		75	ns
T_A =	"	98	GND	IN	OUT	"				"	for test	2 to 3		"	"
-55°C	"	99				"	OUT	IN	GND	"	circuit and	6 to 5		"	"
	"	100				"	OUT	GND	IN	"	waveforms	7 to 5		"	"
	t_{PHL}	101	IN	GND	OUT	"				4.5 V	"	1 to 3		55	"
	"	102	GND	IN	OUT	"				"	"	2 to 3		"	"
	"	103				"	OUT	IN	GND	"	"	6 to 5		"	"
	"	104				"	OUT	GND	IN	"	"	7 to 5		"	"
	t_{TLH}	105	IN	IN	OUT	"				"	"	3		18.5	"
	t_{TLH}	106				"	OUT	IN	IN	"	"	5		18.5	"
	t_{THL}	107	IN	IN	OUT	"				"	"	3		25	"
	t_{THL}	108				"	OUT	IN	IN	"	"	5		25	"

TABLE III. Group A inspection for device type 06.

Subgroup	Symbol	Test no.	1	2	17	12	15	16	4	3	5	8	9	10	11	7	6	Relays energized	Measured terminal			Equations	Note	Test limits		Unit
			V_{S1}	V_{S2}	V_{S3}	1B	1C	1E	2B	2E	2C	V_{CC}	G	1A	1Y	2A	2Y		No.	Value	Unit			Min	Max	
1	V_{IC}	1										4.5 V	-12 mA	4.5 V		4.5 V		None	9	E1	V	V_{IC} = E1	See		-1.5	V
T_A =	V_{IC}	2										4.5 V	4.5 V	-12 mA		4.5 V		"	10	E2	V	V_{IC} = E2	figure 3		-1.5	V
+25°C	V_{IC}	3										4.5 V	4.5 V	4.5 V		-12 mA		"	7	E3	V	V_{IC} = E3	for test		-1.5	V
	I_{IH1}	4										5.5 V	GND	2.4 V		GND		"	10	I1	A	I_{IH1} = I1	circuit		40	µA
	I_{IH1}	5										"	"	GND		2.4 V		"	7	I2	"	I_{IH1} = I2	"		40	µA
	I_{IH2}	6										"	"	5.5 V		GND		"	10	I3	"	I_{IH2} = I3	"		1	mA
	I_{IH2}	7										"	"	GND		5.5 V		"	7	I4	"	I_{IH2} = I4	"		1	mA
	I_{IH3}	8										"	2.4 V	GND		GND		"	9	I5	"	I_{IH3} = I5	"		80	µA
	I_{IH4}	9										"	5.5 V	GND		GND		"	9	I6	"	I_{IH4} = I6	"		2	mA
	I_{IL1}	10										"	5.5 V	0.4 V		5.5 V		"	10	I7	"	I_{IL1} = I7	"		-1.6	mA
	I_{IL1}	11										"	5.5 V	5.5 V		0.4 V		"	7	I8	"	I_{IL1} = I8	"		-1.6	"
	I_{IL2}	12										"	0.4 V	5.5 V		5.5 V		"	9	I9	"	I_{IL2} = I9	"		-3.2	"
	I_{CCH1}	13										"	GND	GND		GND		"	8	I10	"	I_{CCH1} = I10	"		4	"
	I_{CCL1}	14										"	5.5 V	5.5 V		5.5 V		"	8	I11	"	I_{CCL1} = I11	"		11	"
	V_{OL9}	15										4.5 V	2 V	2 V	I_{OL} = 16 mA			"	11	E4	V	V_{OL9} = E4	"		0.5	V
	V_{OL9}	16										"	2 V			2 V	I_{OL} = 16 mA	"	6	E5	"	V_{OL9} = E5	"		0.5	"
	V_{OH}	17										"	4.5 V	0.8 V	I_{OH} = -400 µA			"	11	E6	"	V_{OH} = E6	"	2.4		"
	V_{OH}	18										"	4.5 V			0.8 V	I_{OH} = -400 µA	"	6	E7	"	V_{OH} = E7	"	2.4		"
	I_{OS1}	19										5.5 V	GND	GND	GND			"	11	I12	A	I_{OS1} = I12	"		-55	mA
	I_{OS1}	20										5.5 V	"			GND	GND	"	6	I13	"	I_{OS1} = I13	"		-55	mA
	I_{OS2}	21										4.5 V	"	GND	GND			"	11	I14	"	I_{OS2} = I14	"	-18		"
	I_{OS2}	22										4.5 V	"			GND	GND	"	6	I15	"	I_{OS2} = I15	"	-18		"
	h_{FE1}	23	4 V	$V_{\overline{S}2}$														"	18 to 14	E8	V	h_{FE1} = E8/1000	See figures 3 and 4	25		
	h_{FE1}	24	4 V	"														3	"	E9	"	h_{FE1} = E9/1000	for test	25		
	h_{FE2}	25	6 V	"														None	"	E10	"	h_{FE2} = E10/3000	circuit	30		
	h_{FE2}	26	6 V	"														3	"	E11	"	h_{FE2} = E11/3000	and waveforms	30		
	V_{BE1}	27	4 V	"	$V_{\overline{S}3}$													1,2	12 to 16	E12	"	V_{BE1} = E12	"		1.2	V
	V_{BE1}	28	4 V	"	$V_{\overline{S}3}$													1,2,3	4 to 3	E13	"	V_{BE1} = E13	"		1.2	V

TABLE III. Group A inspection for device type 06 – Continued.

Subgroup	Symbol	Test no.	1	2	17	12	15	16	4	3	5	8	9	10	11	7	6	Relays ener-	Measured terminal			Equations	Note	Test limits		Unit
			V_{S1}	V_{S2}	V_{S3}	1B	1C	1E	2B	2E	2C	V_{CC}	G	1A	1Y	2A	2Y	gized	No.	Value	Unit			Min	Max	
1 T_A = +25°C	V_{BE2}	29	6 V	$V_{\overline{S}2}$	$V_{\overline{S}3}$													1,2	12 to 16	E14	V	V_{BE2} = E14	See figures 3 and 4		1.4	V
	V_{BE2}	30	6 V	"	"													1,2,3	4 to 3	E15	"	V_{BE2} = E15	for test		1.4	V
	V_{CESAT1}	31	4 V	"	"													1,2	15 to 16	E16	"	V_{CESAT1} = E16	circuit		0.5	"
	V_{CESAT1}	32	4 V	"	"													1,2,3	5 to 3	E17	"	V_{CESAT1} = E17	and waveforms		0.5	"
	V_{CESAT2}	33	6 V	"	"													1,2	15 to 16	E18	"	V_{CESAT2} = E18	"		0.8	"
	V_{CESAT2}	34	6 V	"	"													1,2,3	5 to 3	E19	"	V_{CESAT2} = E19	"		0.8	"
	V_{CB02}	35				GND	100 µA											3	15 to 12	E20	"	V_{CB02} = E20	"	40		"
	V_{CB02}	36							GND		100 µA							4	5 to 4	E21	"	V_{CB02} = E21	"	40		"
	V_{CER2}	37					100 µA	GND										4	15 to 16	E22	"	V_{CER2} = E22	"	40		"
	V_{CER2}	38								GND	100 µA							3,4	5 to 3	E23	"	V_{CER2} = E23	"	40		"
	V_{CEO1}	39					10 mA	GND										3	15 to 16	E24	"	V_{CEO1} = E24	"	25		"
	V_{CEO1}	40								GND	10 mA							3,4	5 to 3	E25	"	V_{CEO1} = E25	"	25		"
	V_{EBO}	41				GND		100 µA										3,4	16 to 12	E26	"	V_{EBO} = E26	"	5		"
	V_{EBO}	42							GND		100 µA							4	3 to 4	E27	"	V_{EBO} = E27	"	5		"
2 T_A = +125°C	V_{IC}	43										4.5 V	-12 mA	4.5 V		4.5 V		None	9	E1	V	V_{IC} = E1	See		-1.5	V
	V_{IC}	44										4.5 V	4.5 V	-12 mA		4.5 V		"	10	E2	V	V_{IC} = E2	figure 3		-1.5	V
	V_{IC}	45										4.5 V	4.5 V	4.5 V		-12 mA		"	7	E3	V	V_{IC} = E3	for test		-1.5	V
	I_{IH1}	46										5.5 V	GND	2.4 V		GND		"	10	I1	A	I_{IH1} = I1	circuit		40	µA
	I_{IH1}	47										"	"	GND		2.4 V		"	7	I2	"	I_{IH1} = I2	"		40	µA
	I_{IH2}	48										"	"	5.5 V		GND		"	10	I3	"	I_{IH2} = I3	"		1	mA
	I_{IH2}	49										"	"	GND		5.5 V		"	7	I4	"	I_{IH2} = I4	"		1	mA
	I_{IH3}	50										"	2.4 V	GND		GND		"	9	I5	"	I_{IH3} = I5	"		80	µA
	I_{IH4}	51										"	5.5 V	GND		GND		"	9	I6	"	I_{IH4} = I6	"		2	mA
	I_{IL1}	52										"	4.5 V	0.4 V		4.5 V		"	10	I7	"	I_{IL1} = I7	"		-1.6	mA
	I_{IL1}	53										"	4.5 V	4.5 V		0.4 V		"	7	I8	"	I_{IL1} = I8	"		-1.6	"
	I_{IL2}	54										"	0.4 V	4.5 V		4.5 V		"	9	I9	"	I_{IL2} = I9	"		-3.2	"

TABLE III. Group A inspection for device type 06 – Continued.

Subgroup	Symbol	Test. no	1	2	17	12	15	16	4	3	5	8	9	10	11	7	6	Relays energized	Measured terminal			Equations	Note	Test limits		Unit
			V_{S1}	V_{S2}	V_{S3}	1B	1C	1E	2B	2E	2C	V_{CC}	G	1A	1Y	2A	2Y		No.	Value	Unit			Min	Max	
2	I_{CCH1}	55										5.5 V	GND	GND		GND		None	8	I10	"	I_{CCH1} = I10	See		4	mA
T_A =	I_{CCL1}	56										"	5.5 V	5.5 V		5.5 V		"	8	I11	"	I_{CCL1} = I11	figure 3		11	"
+125°C	V_{OL9}	57										4.5 V	2 V	2 V	I_{OL} = 16 mA			"	11	E4	V	V_{OL9} = E4	for test		0.5	V
	V_{OL9}	58										"	2 V			2 V	I_{OL} = 16 mA	"	6	E5	"	V_{OL9} = E5	circuit		0.5	"
	V_{OH}	59										"	4.5 V	0.8 V	I_{OH} = -400 μA			"	11	E6	"	V_{OH} = E6	"	2.4		"
	V_{OH}	60										"	4.5 V			0.8 V	I_{OH} = -400 μA	"	6	E7	"	V_{OH} = E7	"	2.4		"
	I_{OS1}	61										5.5 V	GND	GND	GND			"	11	I12	A	I_{OS1} = I12	"		-55	mA
	I_{OS1}	62										5.5 V	"			GND	GND	"	6	I13	"	I_{OS1} = I13	"		-55	"
	I_{OS2}	63										4.5 V	"	GND	GND			"	11	I14	"	I_{OS2} = I14	"	-18		"
	I_{OS2}	64										4.5 V	"			GND	GND	"	6	I15	"	I_{OS2} = I15	"	-18		"
	h_{FE1}	65	4 V	$V_{\overline{S}}$ 2														"	18 to 14	E8	V	h_{FE1} = E8/1000	See figures 3 and 4	25		
	h_{FE1}	66	4 V	"														3	"	E9	"	h_{FE1} = E9/1000	for test	25		
	h_{FE2}	67	6 V	"														None	"	E10	"	h_{FE2} = E10/3000	circuit	30		
	h_{FE2}	68	6 V	"														3	"	E11	"	h_{FE2} = E11/3000	and waveforms	30		
	V_{BE1}	69	4 V	"	$V_{\overline{S}}$ 3													1,2	12 to 16	E12	"	V_{BE1} = E12	"		1.2	V
	V_{BE1}	70	4 V	"	$V_{\overline{S}}$ 3													1,2,3	4 to 3	E13	"	V_{BE1} = E13	"		1.2	V
	V_{BE2}	71	6 V	"	$V_{\overline{S}}$ 3													1,2	12 to 16	E14	V	V_{BE2} = E14	"		1.4	V
	V_{BE2}	72	6 V	"	"													1,2,3	4 to 3	E15	"	V_{BE2} = E15	"		1.4	V
	V_{CESAT1}	73	4 V	"	"													1,2	15 to 16	E16	"	V_{CESAT1} = E16	"		0.5	"
	V_{CESAT1}	74	4 V	"	"													1,2,3	5 to 3	E17	"	V_{CESAT1} = E17	"		0.5	"
	V_{CESAT2}	75	6 V	"	"													1,2	15 to 16	E18	"	V_{CESAT2} = E18	"		0.8	"
	V_{CESAT2}	76	6 V	"	"													1,2,3	5 to 3	E19	"	V_{CESAT2} = E19	"		0.8	"

TABLE III. Group A inspection for device type 06 – Continued.

Subgroup	Symbol	Test. no	1 V_{S1}	2 V_{S2}	17 V_{S3}	12 1B	15 1C	16 1E	4 2B	3 2E	5 2C	8 V_{CC}	9 G	10 1A	11 1Y	7 2A	6 2Y	Relays ener-gized	Measured terminal No.	Value	Unit	Equations	Note	Test limits Min	Max	Unit
2	V_{CB02}	77				GND	100 µA											3	15 to 12	E20	"	V_{CB02} = E20	See figure	40		V
T_A =	V_{CB02}	78							GND		100 µA							4	5 to 4	E21	"	V_{CB02} = E21	3 for test	40		"
+125°C	V_{CER2}	79					100 µA	GND										4	15 to 16	E22	"	V_{CER2} = E22	circuit	40		"
	V_{CER2}	80								GND	100 µA							3,4	5 to 3	E23	"	V_{CER2} = E23	"	40		"
	V_{CEO1}	81					10 mA	GND										3	15 to 16	E24	"	V_{CEO1} = E24	"	25		"
	V_{CEO1}	82								GND	10 mA							3,4	5 to 3	E25	"	V_{CEO1} = E25	"	25		"
	V_{EBO}	83				GND		100 µA										3,4	16 to 12	E26	"	V_{EBO} = E26	"	5		"
	V_{EBO}	84							GND		100 µA							4	3 to 4	E27	"	V_{EBO} = E27	"	5		"
3	V_{IC}	85										4.5 V	-12 mA	4.5 V		4.5 V		None	9	E1	V	V_{IC} = E1	See figure		-1.5	V
T_A =	V_{IC}	86										4.5 V	4.5 V	-12 mA		4.5 V		"	10	E2	V	V_{IC} = E2	3 for test		-1.5	V
-55°C	V_{IC}	87										4.5 V	4.5 V	4.5 V		-12 mA		"	7	E3	V	V_{IC} = E3	circuit		-1.5	V
	I_{IH1}	88										5.5 V	GND	2.4 V		GND		"	10	I1	A	I_{IH1} = I1	"		40	µA
	I_{IH1}	89										"	"	GND		2.4 V		"	7	I2	"	I_{IH1} = I2	"		40	µA
	I_{IH2}	90										"	"	5.5 V		GND		"	10	I3	"	I_{IH2} = I3	"		1	mA
	I_{IH2}	91										"	"	GND		5.5 V		"	7	I4	"	I_{IH2} = I4	"		1	mA
	I_{IH3}	92										"	2.4 V	GND		GND		"	9	I5	"	I_{IH3} = I5	"		80	µA
	I_{IH4}	93										"	5.5 V	GND		GND		"	9	I6	"	I_{IH4} = I6	"		2	mA
	I_{IL1}	94										"	4.5 V	0.4 V		4.5 V		"	10	I7	"	I_{IL1} = I7	"		-1.6	mA
	I_{IL1}	95										"	4.5 V	4.5 V		0.4 V		"	7	I8	"	I_{IL1} = I8	"		-1.6	"
	I_{IL2}	96										"	0.4 V	4.5 V		4.5 V		"	9	I9	"	I_{IL2} = I9	"		-3.2	"
	I_{CCH1}	97										"	GND	GND		GND		"	8	I10	"	I_{CCH1} = I10	"		4	ns
	I_{CCL1}	98										"	5.5 V	5.5 V		5.5 V		"	8	I11	"	I_{CCL1} = I11	"		11	"
	V_{OL9}	99										4.5 V	2 V	2 V	I_{OL} = 16 mA			"	11	E4	V	V_{OL9} = E4	"		0.5	V
	V_{OL9}	100										"	2 V			2 V	I_{OL} = 16 mA	"	6	E5	"	V_{OL9} = E5	"		0.5	"
	V_{OH}	101										"	4.5 V	0.8 V	I_{OH} = -400 µA			"	11	E6	"	V_{OH} = E6	"	2.4		"
	V_{OH}	102										"	4.5 V			0.8 V	I_{OH} = -400 µA	"	6	E7	"	V_{OH} = E7	"	2.4		"

TABLE III. Group A inspection for device type 06 – Continued.

Subgroup	Symbol	Test. no	1	2	17	12	15	16	4	3	5	8	9	10	11	7	6	Relays energized	Measured terminal			Equations	Note	Test limits		Unit
			V_{S1}	V_{S2}	V_{S3}	1B	1C	1E	2B	2E	2C	V_{CC}	G	1A	1Y	2A	2Y		No.	Value	Unit			Min	Max	
3	I_{OS1}	103										5.5 V	GND	GND	GND			None	11	I12	A	I_{OS1} = I12	See figure		-55	mA
T_A =	I_{OS1}	104										5.5 V	"			GND	GND	"	6	I13	"	I_{OS1} = I13	3 for test		-55	"
-55°C	I_{OS2}	105										4.5 V	"	GND	GND			"	11	I14	"	I_{OS2} = I14	circuit	-18		"
	I_{OS2}	106										4.5 V	"			GND	GND	"	6	I15	"	I_{OS2} = I15	"	-18		"
	h_{FE3}	107	4 V	$V_{\overline{S}}$ 2														"	18 to 14	E8	V	h_{FE3} = E8/1000	See figures 3 and 4	10		
	h_{FE3}	108	4 V	"														3	"	E9	"	h_{FE3} = E9/1000	for test	10		
	h_{FE4}	109	6 V	"														None	"	E10	"	h_{FE4} = E10/3000	circuit	15		
	h_{FE4}	110	6 V	"														3	"	E11	"	h_{FE4} = E11/3000	and waveforms	15		
	V_{BE1}	111	4 V	"	$V_{\overline{S}}$ 3													1,2	12 to 16	E12	"	V_{BE1} = E12	"		1.2	V
	V_{BE1}	112	4 V	"	$V_{\overline{S}}$ 3													1,2,3	4 to 3	E13	"	V_{BE1} = E13	"		1.2	V
	V_{BE2}	113	6 V	"	$V_{\overline{S}}$ 3													1,2	12 to 16	E14	V	V_{BE2} = E14	"		1.4	V
	V_{BE2}	114	6 V	"	"													1,2,3	4 to 3	E15	"	V_{BE2} = E15	"		1.4	V
	V_{CESAT1}	115	4 V	"	"													1,2	15 to 16	E16	"	V_{CESAT1} = E16	"		0.5	"
	V_{CESAT1}	116	4 V	"	"													1,2,3	5 to 3	E17	"	V_{CESAT1} = E17	"		0.5	"
	V_{CESAT2}	117	6 V	"	"													1,2	15 to 16	E18	"	V_{CESAT2} = E18	"		0.8	"
	V_{CESAT2}	118	6 V	"	"													1,2,3	5 to 3	E19	"	V_{CESAT2} = E19	"		0.8	"
	V_{CB02}	119		"	"	GND	100 µA											3	15 to 12	E20	"	V_{CB02} = E20	"'	40		"
	V_{CB02}	120		"	"				GND		100 µA							4	5 to 4	E21	"	V_{CB02} = E21	"	40		"
	V_{CER2}	121		"	"		100 µA	GND										4	15 to 16	E22	"	V_{CER1} = E22	"	40		"
	V_{CER2}	122		"	"					GND	100 µA							3,4	5 to 3	E23	"	V_{CER1} = E23	"	40		"
	V_{CEO1}	123					10 mA	GND										3	15 to 16	E24	"	V_{CEO1} = E24	"	25		"
	V_{CEO1}	124								GND	10 mA							3,4	5 to 3	E25	"	V_{CEO1} = E25	"	25		"
	V_{EBO}	125				GND		100 µA										3,4	16 to 12	E26	"	V_{EBO} = E26	"	5		"
	V_{EBO}	126							GND		100 µA							4	3 to 4	E27	"	V_{EBO} = E27	"	5		"

TABLE III. Group A inspection for device type 06 – Continued.

Subgroup	Symbol	Test no.	1	2	3	4	5	6	7	8	9	10	11	12	13	14	Notes	Measured terminal	Test limits		Unit
			G	1A	1Y	1B	1C	1E	GND	Sub	2E	2C	2B	2Y	2A	V_{CC}			Min	Max	
9	t_D	127				A	B	GND		GND							See figure 8	5		15	ns
T_A =	t_D	128								"	GND	B	A				for test	10		15	"
+25°C	t_S	129				A	B	GND		"							circuit and	5		23	"
	t_S	130								"	GND	B	A				waveforms	10		23	"
	t_R	131				A	B	GND		"							"	5		20	"
	t_R	132								"	GND	B	A				"	10		20	"
	t_F	133				A	B	GND		"							"	5		15	"
	t_F	134								"	GND	B	A				"	10		15	"
	t_{PLH1}	135	3 V	IN	OUT					"						4.5 V	See figure 6	2 to 3		30	"
	"	136	IN	3 V	OUT					"						"	for test	1 to 3		"	"
	"	137	3 V							"				OUT	IN	"	circuit and	13 to 12		"	"
	"	138	IN							"				OUT	3 V	"	waveforms	1 to 12		"	"
	t_{PHL1}	139	3 V	IN	OUT					"						4.5 V	"	2 to 3		15	"
	"	140	IN	3 V	OUT					"						"	"	1 to 3		"	"
	"	141	3 V							"				OUT	IN	"	"	13 to 12		"	"
	"	142	IN							"				OUT	3 V	"	"	1 to 12		"	"
	t_{PLH3}	143	3 V	IN	Connect to 1B		OUT			"						4.5 V	See figure 7	2 to 5		65	"
	"	144	IN	3 V	Connect to 1B		OUT			"						"	for test	1 to 5		"	"
	"	145	3 V							"		OUT		Connect to 2B	IN	"	circuit and	13 to 10		"	"
	"	146	IN							"		OUT		Connect to 2B	3 V	"	waveforms	1 to 10		"	"
	t_{PHL3}	147	3 V	IN	Connect to 1B		OUT			"						4.5 V	"	2 to 5		50	"
	"	148	IN	3 V	Connect to 1B		OUT			"						"	"	1 to 5		"	"
	"	149	3 V							"		OUT		Connect to 2B	IN	"	"	13 to 10		"	"
	"	150	IN							"		OUT		Connect to 2B	3 V	"	"	1 to 10		"	"
	t_{TLH2}	151	3 V	IN	Connect to 1B		OUT			"						"	"	5		20	"
	t_{TLH2}	152	3 V							"		OUT		Connect to 2B	IN	"	"	10		"	"
	t_{THL2}	153	3 V	IN	Connect to 1B		OUT			"						"	"	5		"	"
	t_{THL2}	154	3 V							"		OUT		Connect to 2B	IN	"	"	10		"	"

TABLE III. Group A inspection for device type 06 – Continued.

Subgroup	Symbol	Test no.	1	2	3	4	5	6	7	8	9	10	11	12	13	14	Notes	Measured terminal	Test limits		Unit
			G	1A	1Y	1B	1C	1E	GND	Sub	2E	2C	2B	2Y	2A	V_{CC}			Min	Max	
10	t_D	155				A	B	GND		GND							See figure 8	5		22.5	ns
T_A =	t_D	156								"	GND	B	A				for test	10		22.5	"
+125°C	t_S	157				A	B	GND		"							circuit and	5		34.5	"
	t_S	158								"	GND	B	A				waveforms	10		34.5	"
	t_R	159				A	B	GND		"							"	5		30	"
	t_R	160								"	GND	B	A				"	10		30	"
	t_F	161				A	B	GND		"							"	5		22.5	"
	t_F	162								"	GND	B	A				"	10		22.5	"
	t_{PLH1}	163	3 V	IN	OUT					"						4.5 V	See figure 6	2 to 3		45	"
	"	164	IN	3 V	OUT					"						"	for test	1 to 3		"	"
	"	165	3 V							"				OUT	IN	"	circuit and	13 to 12		"	"
	"	166	IN							"				OUT	3 V	"	waveforms	1 to 12		"	"
	t_{PHL1}	167	3 V	IN	OUT					"						4.5 V	"	2 to 3		22.5	"
	"	168	IN	3 V	OUT					"							"	1 to 3		"	"
	"	169	3 V							"				OUT	IN	"	"	13 to 12		"	"
	"	170	IN							"				OUT	3 V	"	"	1 to 12		"	"
	t_{PLH3}	171	3 V	IN	Connect to 1B		OUT			"						4.5 V	See figure 7	2 to 5		90	"
	"	172	IN	3 V	Connect to 1B		OUT			"						"	for test	1 to 5		"	"
	"	173	3 V							"		OUT		Connect to 2B	IN	"	circuit and	13 to 10		"	"
	"	174	IN							"		OUT		Connect to 2B	3 V	"	waveforms	1 to 10		"	"
	t_{PHL3}	175	3 V	IN	Connect to 1B		OUT			"						4.5 V	"	2 to 5		75	"
	"	176	IN	3 V	Connect to 1B		OUT			"						"	"	1 to 5		"	"
	"	177	3 V							"		OUT		Connect to 2B	IN	"	"	13 to 10		"	"
	"	178	IN							"		OUT		Connect to 2B	3 V	"	"	1 to 10		"	"
	t_{TLH2}	179	3 V	IN	Connect to 1B		OUT			"						"	"	5		30	"
	t_{TLH2}	180	3 V							"		OUT		Connect to 2B	IN	"	"	10		"	"
	t_{THL2}	181	3 V	IN	Connect to 1B		OUT			"						"	"	5		"	"
	t_{THL2}	182	3 V							"		OUT		Connect to 2B	IN	"	"	10		"	"

TABLE III. Group A inspection for device type 06 – Continued.

Subgroup	Symbol	Test no.	1	2	3	4	5	6	7	8	9	10	11	12	13	14	Notes	Measured terminal	Test limits		Unit
			G	1A	1Y	1B	1C	1E	GND	Sub	2E	2C	2B	2Y	2A	V_{CC}			Min	Max	
11	t_D	183				A	B	GND		GND							See figure 8	5		22.5	ns
T_A =	t_D	184								“	GND	B	A				for test	10		22.5	“
-55°C	t_S	185				A	B	GND		“							circuit and	5		34.5	“
	t_S	186								“	GND	B	A				waveforms	10		34.5	“
	t_R	187				A	B	GND		“							“	5		30	“
	t_R	188								“	GND	B	A				“	10		30	“
	t_F	189				A	B	GND		“							“	5		22.5	“
	t_F	190								“	GND	B	A				“	10		22.5	“
	t_{PLH1}	191	3 V	IN	OUT					“						4.5 V	See figure 6	2 to 3		45	“
	“	192	IN	3 V	OUT					“						“	for test	1 to 3		“	“
	“	193	3 V							“				OUT	IN	“	circuit and	13 to 12		“	“
	“	194	IN							“				OUT	3 V	“	waveforms	1 to 12		“	“
	t_{PHL1}	195	3 V	IN	OUT					“						4.5 V	“	2 to 3		22.5	“
	“	196	IN	3 V	OUT					“						“	“	1 to 3		“	“
	“	197	3 V							“				OUT	IN	“	“	13 to 12		“	“
	“	198	IN							“			OUT	3 V		“	“	1 to 12		“	“
	t_{PLH3}	199	3 V	IN	Connect to 1B		OUT			“						4.5 V	See figure 7	2 to 5		90	“
	“	200	IN	3 V	Connect to 1B		OUT			“						“	for test	1 to 5		“	“
	“	201	3 V							“		OUT		Connect to 2B	IN	“	circuit and	13 to 10		“	“
	“	202	IN							“		OUT		Connect to 2B	3 V	“	waveforms	1 to 10		“	“
	t_{PHL3}	203	3 V	IN	Connect to 1B		OUT			“						4.5 V	“	2 to 5		75	“
	“	204	IN	3 V	Connect to 1B		OUT			“						“	“	1 to 5		“	“
	“	205	3 V							“		OUT		Connect to 2B	IN	“	“	13 to 10		“	“
	“	206	IN							“		OUT		Connect to 2B	3 V	“	“	1 to 10		“	“
	t_{TLH2}	207	3 V	IN	Connect to 1B		OUT			“						“	“	5		30	“
	t_{TLH2}	208	3 V							“		OUT		Connect to 2B	IN	“	“	10		“	“
	t_{THL2}	209	3 V	IN	Connect to 1B		OUT			“						“	“	5		“	“
	t_{THL2}	210	3 V							“		OUT		Connect to 2B	IN	“	“	10		“	“

TABLE III. Group A inspection for device type 07.

Subgroup	Symbol	Test no.	1 1A	2 1B	3 1Y	4 GND	5 2Y	6 2A	7 2B	8 V_{CC}	Notes	Measured terminal	Test limits Min	Test limits Max	Unit
1	V_{IC}	1	-12 mA	4.5 V		GND				4.5 V	See figure	1 to 4		-1.5	V
T_A =	"	2	4.5 V	-12 mA		"				"	5 for test	2 to 4		"	"
+25°C	"	3				"		-12 mA	4.5 V	"	circuit	6 to 4		"	"
	"	4				"		4.5 V	-12 mA	"	"	7 to 4		"	"
	I_{IH1}	5	2.4 V	GND		"				5.5 V	"	1 to 4		40	µA
	"	6	GND	2.4 V		"				"	"	2 to 4		"	
	"	7				"		2.4 V	GND	"	"	6 to 4		"	
	"	8				"		GND	2.4 V	"	"	7 to 4		"	
	I_{IH2}	9	5.5 V	GND		"				"	"	1 to 4		1	mA
	"	10	GND	5.5 V		"				"	"	2 to 4		"	"
	"	11				"		5.5 V	GND	"	"	6 to 4		"	"
	"	12				"		GND	5.5 V	"	"	7 to 4		"	"
	I_{IL1}	13	0.4 V	5.5 V		"				"	"	1 to 4		-1.6	mA
	"	14	5.5 V	0.4 V		"				"	"	2 to 4		"	"
	"	15				"		0.4 V	5.5 V	"	"	6 to 4		"	"
	"	16				"		5.5 V	0.4 V	"	"	7 to 4		"	"
	I_{CCH2}	17	5.5 V	5.5 V		"		5.5 V	5.5 V	"	"	8		11	"
	I_{CCL5}	18	GND	GND		"		GND	GND	"	"	8		76	"
	V_{OL1}	19	0.8 V	0.8 V	100 mA	"				4.5 V	"	3 to 4		0.5	V
	V_{OL1}	20				"	100 mA	0.8 V	0.8 V	"	"	5 to 4		0.5	"
	V_{OL5}	21	0.8 V	0.8 V	300 mA	"				"	"	3 to 4		0.8	"
	V_{OL5}	22				"	300 mA	0.8 V	0.8 V	"	"	5 to 4		0.8	"
	I_{OH1}	23	2 V	2 V	30 V	"				"	"	3		300	µA
	I_{OH1}	24				"	30 V	2 V	2 V	"	"	5		300	"

TABLE III. Group A inspection for device type 07 – Continued.

Subgroup	Symbol	Test no.	1 1A	2 1B	3 1Y	4 GND	5 2Y	6 2A	7 2B	8 V_{CC}	Notes	Measured terminal	Test limits Min	Test limits Max	Unit
2	V_{IC}	25	-12 mA	4.5 V		GND				4.5 V	See figure	1 to 4		-1.5	V
T_A =	"	26	4.5 V	-12 mA		"				"	5 for test	2 to 4		"	"
+125°C	"	27				"		-12 mA	4.5 V	"	circuit	6 to 4		"	"
	"	28				"		4.5 V	-12 mA	"	"	7 to 4		"	"
	I_{IH1}	29	2.4 V	GND		"				5.5 V	"	1 to 4		40	µA
	"	30	GND	2.4 V		"				"	"	2 to 4		"	"
	"	31				"		2.4 V	GND	"	"	6 to 4		"	"
	"	32				"		GND	2.4 V	"	"	7 to 4		"	"
	I_{IH2}	33	5.5 V	GND		"				"	"	1 to 4		1	mA
	"	34	GND	5.5 V		"				"	"	2 to 4		"	"
	"	35				"		5.5 V	GND	"	"	6 to 4		"	"
	"	36				"		GND	5.5 V	"	"	7 to 4		"	"
	I_{IL1}	37	0.4 V	5.5 V		"				"	"	1 to 4		-1.6	mA
	"	38	5.5 V	0.4 V		"				"	"	2 to 4		"	"
	"	39				"		0.4 V	5.5 V	"	"	6 to 4		"	"
	"	40				"		5.5 V	0.4 V	"	"	7 to 4		"	"
	I_{CCH2}	41	5.5 V	5.5 V		"		5.5 V	5.5 V	"	"	8		11	"
	I_{CCL5}	42	GND	GND		"		GND	GND	"	"	8		76	"
	V_{OL1}	43	0.8 V	0.8 V	100 mA	"				4.5 V	"	3 to 4		0.5	V
	V_{OL1}	44				"	100 mA	0.8 V	0.8 V	"	"	5 to 4		0.5	"
	V_{OL5}	45	0.8 V	0.8 V	300 mA	"				"	"	3 to 4		0.8	"
	V_{OL5}	46				"	300 mA	0.8 V	0.8 V	"	"	5 to 4		0.8	"
	I_{OH1}	47	2 V	2 V	30 V	"				"	"	3		300	µA
	I_{OH1}	48				"	30 V	2 V	2 V	"	"	5		300	"

TABLE III. Group A inspection for device type 07 – Continued.

Subgroup	Symbol	Test no.	1 1A	2 1B	3 1Y	4 GND	5 2Y	6 2A	7 2B	8 V_{CC}	Notes	Measured terminal	Test limits Min	Test limits Max	Unit
3	V_{IC}	49	-12 mA	4.5 V		GND				4.5 V	See figure	1 to 4		-1.5	V
T_A =	"	50	4.5 V	-12 mA		"				"	5 for test	2 to 4		"	"
-55°C	"	51				"		-12 mA	4.5 V	"	circuit	6 to 4		"	"
	"	52				"		4.5 V	-12 mA	"	"	7 to 4		"	"
	I_{IH1}	53	2.4 V	GND		"				5.5 V	"	1 to 4		40	µA
	"	54	GND	2.4 V		"				"	"	2 to 4		"	"
	"	55				"		2.4 V	GND	"	"	6 to 4		"	"
	"	56				"		GND	2.4 V	"	"	7 to 4		"	"
	I_{IH2}	57	5.5 V	GND		"				"	"	1 to 4		1	mA
	"	58	GND	5.5 V		"				"	"	2 to 4		"	"
	"	59				"		5.5 V	GND	"	"	6 to 4		"	"
	"	60				"		GND	5.5 V	"	"	7 to 4		"	"
	I_{IL1}	61	0.4 V	5.5 V		"				"	"	1 to 4		-1.6	mA
	"	62	5.5 V	0.4 V		"				"	"	2 to 4		"	"
	"	63				"		0.4 V	5.5 V	"	"	6 to 4		"	"
	"	64				"		5.5 V	0.4 V	"	"	7 to 4		"	"
	I_{CCH2}	65	5.5 V	5.5 V		"		5.5 V	5.5 V	"	"	8		11	"
	I_{CCL5}	66	GND	GND		"		GND	GND	"	"	8		76	"
	V_{OL1}	67	0.8 V	0.8 V	100 mA	"				4.5 V	"	3 to 4		0.5	V
	V_{OL1}	68				"	100 mA	0.8 V	0.8 V	"	"	5 to 4		0.5	"
	V_{OL5}	69	0.8 V	0.8 V	300 mA	"				"	"	3 to 4		0.8	"
	V_{OL5}	70				"	300 mA	0.8 V	0.8 V	"	"	5 to 4		0.8	"
	I_{OH1}	71	2 V	2 V	30 V	"				"	"	3		300	µA
	I_{OH1}	72				"	30 V	2 V	2 V	"	"	5		300	"

TABLE III. Group A inspection for device type 07 – Continued.

Subgroup	Symbol	Test no.	1 1A	2 1B	3 1Y	4 GND	5 2Y	6 2A	7 2B	8 V_{CC}	Notes	Measured terminal	Test limits Min	Test limits Max	Unit
9	t_{PLH}	73	IN	3 V	OUT	GND				4.5 V	See figure 9	1 to 3		55	ns
T_A =	“	74	3 V	IN	OUT	“				“	for test	2 to 3		“	“
+25°C	“	75				“	OUT	IN	3 V	“	circuit and	6 to 5		“	“
	“	76				“	OUT	3 V	IN	“	waveforms	7 to 5		“	“
	t_{PHL}	77	IN	3 V	OUT	“				4.5 V	“	1 to 3		40	“
	“	78	3 V	IN	OUT	“				“	“	2 to 3		“	“
	“	79				“	OUT	IN	3 V	“	“	6 to 5		“	“
	“	80				“	OUT	3 V	IN	“	“	7 to 5		“	“
	t_{TLH}	81	IN	IN	OUT	“				“	“	3		20	“
	t_{TLH}	82				“	OUT	IN	IN	“	“	5		“	“
	t_{THL}	83	IN	IN	OUT	“				“	“	3		“	“
	t_{THL}	84				“	OUT	IN	IN	“	“	5		“	“
10	t_{PLH}	85	IN	3 V	OUT	GND				4.5 V	“	1 to 3		65	ns
T_A =	“	86	3 V	IN	OUT	“				“	“	2 to 3		“	“
+125°C	“	87				“	OUT	IN	3 V	“	“	6 to 5		“	“
	“	88				“	OUT	3 V	IN	“	“	7 to 5		“	“
	t_{PHL}	89	IN	3 V	OUT	“				4.5 V	“	1 to 3		60	“
	“	90	3 V	IN	OUT	“				“	“	2 to 3		“	“
	“	91				“	OUT	IN	3 V	“	“	6 to 5		“	“
	“	92				“	OUT	3 V	IN	“	“	7 to 5		“	“
	t_{TLH}	93	IN	IN	OUT	“				“	“	3		26.5	“
	t_{TLH}	94				“	OUT	IN	IN	“	“	5		26.5	“
	t_{THL}	95	IN	IN	OUT	“				“	“	3		25	“
	t_{THL}	96				“	OUT	IN	IN	“	“	5		25	“

TABLE III. Group A inspection for device type 07 - Continued.

Subgroup	Symbol	Test no.	1 1A	2 1B	3 1Y	4 GND	5 2Y	6 2A	7 2B	8 V_{CC}	Notes	Measured terminal	Test limits Min	Test limits Max	Unit
11	t_{PLH}	97	IN	3 V	OUT	GND				4.5 V	See figure 9	1 to 3		65	ns
T_A =	"	98	3 V	IN	OUT	"				"	for test	2 to 3		"	"
-55°C	"	99				"	OUT	IN	3 V	"	circuit and	6 to 5		"	"
	"	100				"	OUT	3 V	IN	"	waveforms	7 to 5		"	"
	t_{PHL}	101	IN	3 V	OUT	"				4.5 V	"	1 to 3		60	"
	"	102	3 V	IN	OUT	"				"	"	2 to 3		"	"
	"	103				"	OUT	IN	3 V	"	"	6 to 5		"	"
	"	104				"	OUT	3 V	IN	"	"	7 to 5		"	"
	t_{TLH}	105	IN	IN	OUT	"				"	"	3		26.5	"
	t_{TLH}	106				"	OUT	IN	IN	"	"	5		26.5	"
	t_{THL}	107	IN	IN	OUT	"				"	"	3		25	"
	t_{THL}	108				"	OUT	IN	IN	"	"	5		25	"

TABLE III. Group A inspection for device type 08.

Subgroup	Symbol	Test no.	1 1A	2 1B	3 1Y	4 GND	5 2Y	6 2A	7 2B	8 V_{CC}	Notes	Measured terminal	Test limits Min	Test limits Max	Unit
1	V_{IC}	1	-12 mA	4.5 V		GND				4.5 V	See figure	1 to 4		-1.5	V
T_A =	"	2	4.5 V	-12 mA		"				"	5 for test	2 to 4		"	"
+25°C	"	3				"		-12 mA	4.5 V	"	circuit	6 to 4		"	"
	"	4				"		4.5 V	-12 mA	"	"	7 to 4		"	"
	I_{IH1}	5	2.4 V	GND		"				5.5 V	"	1 to 4		40	μA
	"	6	GND	2.4 V		"				"	"	2 to 4		"	"
	"	7				"		2.4 V	GND	"	"	6 to 4		"	"
	"	8				"		GND	2.4 V	"	"	7 to 4		"	"
	I_{IH2}	9	5.5 V	GND		"				"	"	1 to 4		1	mA
	"	10	GND	5.5 V		"				"	"	2 to 4		"	"
	"	11				"		5.5 V	GND	"	"	6 to 4		"	"
	"	12				"		GND	5.5 V	"	"	7 to 4		"	"
	I_{IL1}	13	0.4 V	5.5 V		"				"	"	1 to 4		-1.6	mA
	"	14	5.5 V	0.4 V		"				"	"	2 to 4		"	"
	"	15				"		0.4 V	5.5 V	"	"	6 to 4		"	"
	"	16				"		5.5 V	0.4 V	"	"	7 to 4		"	"
	I_{CCH3}	17	GND	GND		"		GND	GND	"	"	8		17	"
	I_{CCL6}	18	5.5 V	5.5 V		"		5.5 V	5.5 V	"	"	8		76	"
	V_{OL2}	19	2 V	2 V	100 mA	"				4.5 V	"	3 to 4		0.5	V
	V_{OL2}	20				"	100 mA	2 V	2 V	"	"	5 to 4		0.5	"
	V_{OL6}	21	2 V	2 V	300 mA	"				"	"	3 to 4		0.8	"
	V_{OL6}	22				"	300 mA	2 V	2 V	"	"	5 to 4		0.8	"
	I_{OH2}	23	0.8 V	4.5 V	30 V	"				"	"	3		300	μA
	I_{OH2}	24				"	30 V	0.8 V	4.5 V	"	"	5		300	"

TABLE III. Group A inspection for device type 08 - Continued.

Subgroup	Symbol	Test no.	1 1A	2 1B	3 1Y	4 GND	5 2Y	6 2A	7 2B	8 V_{CC}	Notes	Measured terminal	Test limits Min	Test limits Max	Unit
2	V_{IC}	25	-12 mA	4.5 V		GND				4.5 V	See figure	1 to 4		-1.5	V
T_A =	"	26	4.5 V	-12 mA		"				"	5 for test	2 to 4		"	"
+125°C	"	27				"		-12 mA	4.5 V	"	circuit	6 to 4		"	"
	"	28				"		4.5 V	-12 mA	"	"	7 to 4		"	"
	I_{IH1}	29	2.4 V	GND		"				5.5 V	"	1 to 4		40	µA
	"	30	GND	2.4 V		"				"	"	2 to 4		"	"
	"	31				"		2.4 V	GND	"	"	6 to 4		"	"
	"	32				"		GND	2.4 V	"	"	7 to 4		"	"
	I_{IH2}	33	5.5 V	GND		"				"	"	1 to 4		1	mA
	"	34	GND	5.5 V		"				"	"	2 to 4		"	"
	"	35				"		5.5 V	GND	"	"	6 to 4		"	"
	"	36				"		GND	5.5 V	"	"	7 to 4		"	"
	I_{IL1}	37	0.4 V	5.5 V		"				"	"	1 to 4		-1.6	mA
	"	38	5.5 V	0.4 V		"				"	"	2 to 4		"	"
	"	39				"		0.4 V	5.5 V	"	"	6 to 4		"	"
	"	40				"		5.5 V	0.4 V	"	"	7 to 4		"	"
	I_{CCH3}	41	GND	GND		"		GND	GND	"	"	8		17	"
	I_{CCL6}	42	5.5 V	5.5 V		"		5.5 V	5.5 V	"	"	8		76	"
	V_{OL2}	43	2 V	2 V	100 mA	"				4.5 V	"	3 to 4		0.5	V
	V_{OL2}	44				"	100 mA	2 V	2 V	"	"	5 to 4		0.5	"
	V_{OL6}	45	2 V	2 V	300 mA	"				"	"	3 to 4		0.8	"
	V_{OL6}	46				"	300 mA	2 V	2 V	"	"	5 to 4		0.8	"
	I_{OH2}	47	0.8 V	4.5 V	30 V	"				"	"	3		300	µA
	I_{OH2}	48				"	30 V	0.8 V	4.5 V	"	"	5		300	"

TABLE III. Group A inspection for device type 08 - Continued.

Subgroup	Symbol	Test no.	1 1A	2 1B	3 1Y	4 GND	5 2Y	6 2A	7 2B	8 V_{CC}	Notes	Measured terminal	Test limits Min	Test limits Max	Unit
3	V_{IC}	49	-12 mA	4.5 V		GND				4.5 V	See figure	1 to 4		-1.5	V
T_A =	"	50	4.5 V	-12 mA		"				"	5 for test	2 to 4		"	"
-55°C	"	51				"		-12 mA	4.5 V	"	circuit	6 to 4		"	"
	"	52				"		4.5 V	-12 mA	"	"	7 to 4		"	"
	I_{IH1}	53	2.4 V	GND		"				5.5 V	"	1 to 4		40	µA
	"	54	GND	2.4 V		"				"	"	2 to 4		"	"
	"	55				"		2.4 V	GND	"	"	6 to 4		"	"
	"	56				"		GND	2.4 V	"	"	7 to 4		"	"
	I_{IH2}	57	5.5 V	GND		"				"	"	1 to 4		1	mA
	"	58	GND	5.5 V		"				"	"	2 to 4		"	"
	"	59				"		5.5 V	GND	"	"	6 to 4		"	"
	"	60				"		GND	5.5 V	"	"	7 to 4		"	"
	I_{IL1}	61	0.4 V	5.5 V		"				"	"	1 to 4		-1.6	mA
	"	62	5.5 V	0.4 V		"				"	"	2 to 4		"	"
	"	63				"		0.4 V	5.5 V	"	"	6 to 4		"	"
	"	64				"		5.5 V	0.4 V	"	"	7 to 4		"	"
	I_{CCH3}	65	GND	GND		"		GND	GND	"	"	8		17	"
	I_{CCL6}	66	5.5 V	5.5 V		"		5.5 V	5.5 V	"	"	8		76	"
	V_{OL2}	67	2 V	2 V	100 mA	"				4.5 V	"	3 to 4		0.5	V
	V_{OL2}	68				"	100 mA	2 V	2 V	"	"	5 to 4		0.5	"
	V_{OL6}	69	2 V	2 V	300 mA	"				"	"	3 to 4		0.8	"
	V_{OL6}	70				"	300 mA	2 V	2 V	"	"	5 to 4		0.8	"
	I_{OH2}	71	0.8 V	4.5 V	30 V	"				"	"	3		300	µA
	I_{OH2}	72				"	30 V	0.8 V	4.5 V	"	"	5		300	"

TABLE III. Group A inspection for device type 08 - Continued.

Subgroup	Symbol	Test no.	1 1A	2 1B	3 1Y	4 GND	5 2Y	6 2A	7 2B	8 V_{CC}	Notes	Measured terminal	Test limits Min	Test limits Max	Unit
9	t_{PLH}	73	IN	3 V	OUT	GND				4.5 V	See figure 9	1 to 3		65	ns
T_A =	"	74	3 V	IN	OUT	"				"	for test	2 to 3		"	"
+25°C	"	75				"	OUT	IN	3 V	"	circuit and	6 to 5		"	"
	"	76				"	OUT	3 V	IN	"	waveforms	7 to 5		"	"
	t_{PHL}	77	IN	3 V	OUT	"				4.5 V	"	1 to 3		50	"
	"	78	3 V	IN	OUT	"				"	"	2 to 3		"	"
	"	79				"	OUT	IN	3 V	"	"	6 to 5		"	"
	"	80				"	OUT	3 V	IN	"	"	7 to 5		"	"
	t_{TLH}	81	IN	IN	OUT	"				"	"	3		25	"
	t_{TLH}	82				"	OUT	IN	IN	"	"	5		25	"
	t_{THL}	83	IN	IN	OUT	"				"	"	3		20	"
	t_{THL}	84				"	OUT	IN	IN	"	"	5		20	"
10	t_{PLH}	85	IN	3 V	OUT	GND				4.5 V	"	1 to 3		95	ns
T_A =	"	86	3 V	IN	OUT	"				"	"	2 to 3		"	"
+125°C	"	87				"	OUT	IN	3 V	"	"	6 to 5		"	"
	"	88				"	OUT	3 V	IN	"	"	7 to 5		"	"
	t_{PHL}	89	IN	3 V	OUT	"				4.5 V	"	1 to 3		75	"
	"	90	3 V	IN	OUT	"				"	"	2 to 3		"	"
	"	91				"	OUT	IN	3 V	"	"	6 to 5		"	"
	"	92				"	OUT	3 V	IN	"	"	7 to 5		"	"
	t_{TLH}	93	IN	IN	OUT	"				"	"	3		33.5	"
	t_{TLH}	94				"	OUT	IN	IN	"	"	5		33.5	"
	t_{THL}	95	IN	IN	OUT	"				"	"	3		35	"
	t_{THL}	96				"	OUT	IN	IN	"	"	5		35	"

TABLE III. Group A inspection for device type 08 - Continued.

Subgroup	Symbol	Test no.	1 1A	2 1B	3 1Y	4 GND	5 2Y	6 2A	7 2B	8 V_{CC}	Notes	Measured terminal	Test limits Min	Test limits Max	Unit
11	t_{PLH}	97	IN	3 V	OUT	GND				4.5 V	See figure 9	1 to 3		95	ns
T_A =	"	98	3 V	IN	OUT	"				"	for test	2 to 3		"	"
-55°C	"	99				"	OUT	IN	3 V	"	circuit and	6 to 5		"	"
	"	100				"	OUT	3 V	IN	"	waveforms	7 to 5		"	"
	t_{PHL}	101	IN	3 V	OUT	"				4.5 V	"	1 to 3		75	"
	"	102	3 V	IN	OUT	"				"	"	2 to 3		"	"
	"	103				"	OUT	IN	3 V	"	"	6 to 5		"	"
	"	104				"	OUT	3 V	IN	"	"	7 to 5		"	"
	t_{TLH}	105	IN	IN	OUT	"				"	"	3		33.5	"
	t_{TLH}	106				"	OUT	IN	IN	"	"	5		33.5	"
	t_{THL}	107	IN	IN	OUT	"				"	"	3		35	"
	t_{THL}	108				"	OUT	IN	IN	"	"	5		35	"

TABLE III. Group A inspection for device type 09.

Subgroup	Symbol	Test no.	1 1A	2 1B	3 1Y	4 GND	5 2Y	6 2A	7 2B	8 V_{CC}	Notes	Measured terminal	Test limits Min	Test limits Max	Unit
1	V_{IC}	1	-12 mA	4.5 V		GND				4.5 V	See figure	1 to 4		-1.5	V
T_A =	"	2	4.5 V	-12 mA		"				"	5 for test	2 to 4		"	"
+25°C	"	3				"		-12 mA	4.5 V	"	circuit	6 to 4		"	"
	"	4				"		4.5 V	-12 mA	"	"	7 to 4		"	"
	I_{IH1}	5	2.4 V	GND		"				5.5 V	"	1 to 4		40	µA
	"	6	GND	2.4 V		"				"	"	2 to 4		"	"
	"	7				"		2.4 V	GND	"	"	6 to 4		"	"
	"	8				"		GND	2.4 V	"	"	7 to 4		"	"
	I_{IH2}	9	5.5 V	GND		"				"	"	1 to 4		1	mA
	"	10	GND	5.5 V		"				"	"	2 to 4		"	"
	"	11				"		5.5 V	GND	"	"	6 to 4		"	"
	"	12				"		GND	5.5 V	"	"	7 to 4		"	"
	I_{IL1}	13	0.4 V	GND		"				"	"	1 to 4		-1.6	mA
	"	14	GND	0.4 V		"				"	"	2 to 4		"	"
	"	15				"		0.4 V	GND	"	"	6 to 4		"	"
	"	16				"		GND	0.4 V	"	"	7 to 4		"	"
	I_{CCH2}	17	5.5 V	5.5 V		"		5.5 V	5.5 V	"	"	8		11	"
	I_{CCL5}	18	GND	GND		"		GND	GND	"	"	8		76	"
	V_{OL3}	19	0.8 V	0.8 V	100 mA	"				4.5 V	"	3 to 4		0.5	V
	V_{OL3}	20				"	100 mA	0.8 V	0.8 V	"	"	5 to 4		0.5	"
	V_{OL7}	21	0.8 V	0.8 V	300 mA	"				"	"	3 to 4		0.8	"
	V_{OL7}	22				"	300 mA	0.8 V	0.8 V	"	"	5 to 4		0.8	"
	I_{OH3}	23	2 V	GND	30 V	"				"	"	3		300	µA
	I_{OH3}	24				"	30 V	2 V	GND	"	"	5		300	"

TABLE III. Group A inspection for device type 09 - Continued.

Subgroup	Symbol	Test no.	1 1A	2 1B	3 1Y	4 GND	5 2Y	6 2A	7 2B	8 V_{CC}	Notes	Measured terminal	Test limits Min	Test limits Max	Unit
2	V_{IC}	25	-12 mA	4.5 V		GND				4.5 V	See figure	1 to 4		-1.5	V
T_A =	"	26	4.5 V	-12 mA		"				"	5 for test	2 to 4		"	"
+125°C	"	27				"		-12 mA	4.5 V	"	circuit	6 to 4		"	"
	"	28				"		4.5 V	-12 mA	"	"	7 to 4		"	"
	I_{IH1}	29	2.4 V	GND		"				5.5 V	"	1 to 4		40	µA
	"	30	GND	2.4 V		"				"	"	2 to 4		"	"
	"	31				"		2.4 V	GND	"	"	6 to 4		"	"
	"	32				"		GND	2.4 V	"	"	7 to 4		"	"
	I_{IH2}	33	5.5 V	GND		"				"	"	1 to 4		1	mA
	"	34	GND	5.5 V		"				"	"	2 to 4		"	"
	"	35				"		5.5 V	GND	"	"	6 to 4		"	"
	"	36				"		GND	5.5 V	"	"	7 to 4		"	"
	I_{IL1}	37	0.4 V	GND		"				"	"	1 to 4		-1.6	mA
	"	38	GND	0.4 V		"				"	"	2 to 4		"	"
	"	39				"		0.4 V	GND	"	"	6 to 4		"	"
	"	40				"		GND	0.4 V	"	"	7 to 4		"	"
	I_{CCH2}	41	5.5 V	5.5 V		"		5.5 V	5.5 V	"	"	8		11	"
	I_{CCL5}	42	GND	GND		"		GND	GND	"	"	8		76	"
	V_{OL3}	43	0.8 V	0.8 V	100 mA	"				4.5 V	"	3 to 4		0.5	V
	V_{OL3}	44				"	100 mA	0.8 V	0.8 V	"	"	5 to 4		0.5	"
	V_{OL7}	45	0.8 V	0.8 V	300 mA	"				"	"	3 to 4		0.8	"
	V_{OL7}	46				"	300 mA	0.8 V	0.8 V	"	"	5 to 4		0.8	"
	I_{OH3}	47	2 V	GND	30 V	"				"	"	3		300	µA
	I_{OH3}	48				"	30 V	2 V	GND	"	"	5		300	"

TABLE III. Group A inspection for device type 09 - Continued.

Subgroup	Symbol	Test no.	1 1A	2 1B	3 1Y	4 GND	5 2Y	6 2A	7 2B	8 V_{CC}	Notes	Measured terminal	Test limits Min	Test limits Max	Unit
3	V_{IC}	49	-12 mA	4.5 V		GND				4.5 V	See figure	1 to 4		-1.5	V
T_A =	"	50	4.5 V	-12 mA		"				"	5 for test	2 to 4		"	"
-55°C	"	51				"		-12 mA	4.5 V	"	circuit	6 to 4		"	"
	"	52				"		4.5 V	-12 mA	"	"	7 to 4		"	"
	I_{IH1}	53	2.4 V	GND		"				5.5 V	"	1 to 4		40	µA
	"	54	GND	2.4 V		"				"	"	2 to 4		"	"
	"	55				"		2.4 V	GND	"	"	6 to 4		"	"
	"	56				"		GND	2.4 V	"	"	7 to 4		"	"
	I_{IH2}	57	5.5 V	GND		"				"	"	1 to 4		1	mA
	"	58	GND	5.5 V		"				"	"	2 to 4		"	"
	"	59				"		5.5 V	GND	"	"	6 to 4		"	"
	"	60				"		GND	5.5 V	"	"	7 to 4		"	"
	I_{IL1}	61	0.4 V	GND		"				"	"	1 to 4		-1.6	mA
	"	62	GND	0.4 V		"				"	"	2 to 4		"	"
	"	63				"		0.4 V	GND	"	"	6 to 4		"	"
	"	64				"		GND	0.4 V	"	"	7 to 4		"	"
	I_{CCH2}	65	5.5 V	5.5 V		"		5.5 V	5.5 V	"	"	8		11	"
	I_{CCL5}	66	GND	GND		"		GND	GND	"	"	8		76	"
	V_{OL3}	67	0.8 V	0.8 V	100 mA	"				4.5 V	"	3 to 4		0.5	V
	V_{OL3}	68				"	100 mA	0.8 V	0.8 V	"	"	5 to 4		0.5	"
	V_{OL7}	69	0.8 V	0.8 V	300 mA	"				"	"	3 to 4		0.8	"
	V_{OL7}	70				"	300 mA	0.8 V	0.8 V	"	"	5 to 4		0.8	"
	I_{OH3}	71	2 V	GND	30 V	"				"	"	3		300	µA
	I_{OH3}	72				"	30 V	2 V	GND	"	"	5		300	"

TABLE III. Group A inspection for device type 09 - Continued.

Subgroup	Symbol	Test no.	1 1A	2 1B	3 1Y	4 GND	5 2Y	6 2A	7 2B	8 V_{CC}	Notes	Measured terminal	Test limits Min	Test limits Max	Unit
9	t_{PLH}	73	IN	GND	OUT	GND				4.5 V	See figure 9	1 to 3		55	ns
T_A =	"	74	GND	IN	OUT	"				"	for test	2 to 3		"	"
+25°C	"	75				"	OUT	IN	GND	"	circuit and	6 to 5		"	"
	"	76				"	OUT	GND	IN	"	waveforms	7 to 5		"	"
	t_{PHL}	77	IN	GND	OUT	"				4.5 V	"	1 to 3		40	"
	"	78	GND	IN	OUT	"				"	"	2 to 3		"	"
	"	79				"	OUT	IN	GND	"	"	6 to 5		"	"
	"	80				"	OUT	GND	IN	"	"	7 to 5		"	"
	t_{TLH}	81	IN	IN	OUT	"				"	"	3		25	"
	t_{TLH}	82				"	OUT	IN	IN	"	"	5		"	"
	t_{THL}	83	IN	IN	OUT	"				"	"	3		"	"
	t_{THL}	84				"	OUT	IN	IN	"	"	5		"	"
10	t_{PLH}	85	IN	GND	OUT	GND				4.5 V	"	1 to 3		70	ns
T_A =	"	86	GND	IN	OUT	"				"	"	2 to 3		"	"
+125°C	"	87				"	OUT	IN	GND	"	"	6 to 5		"	"
	"	88				"	OUT	GND	IN	"	"	7 to 5		"	"
	t_{PHL}	89	IN	GND	OUT	"				4.5 V	"	1 to 3		60	"
	"	90	GND	IN	OUT	"				"	"	2 to 3		"	"
	"	91				"	OUT	IN	GND	"	"	6 to 5		"	"
	"	92				"	OUT	GND	IN	"	"	7 to 5		"	"
	t_{TLH}	93	IN	IN	OUT	"				"	"	3		33.5	"
	t_{TLH}	94				"	OUT	IN	IN	"	"	5		33.5	"
	t_{THL}	95	IN	IN	OUT	"				"	"	3		25	"
	t_{THL}	96				"	OUT	IN	IN	"	"	5		25	"

TABLE III. Group A inspection for device type 09 - Continued.

Subgroup	Symbol	Test no.	1 1A	2 1B	3 1Y	4 GND	5 2Y	6 2A	7 2B	8 V_{CC}	Notes	Measured terminal	Test limits Min	Test limits Max	Unit
11	t_{PLH}	97	IN	GND	OUT	GND				4.5 V	See figure 9	1 to 3		70	ns
T_A =	"	98	GND	IN	OUT	"				"	for test	2 to 3		"	"
-55°C	"	99				"	OUT	IN	GND	"	circuit and	6 to 5		"	"
	"	100				"	OUT	GND	IN	"	waveforms	7 to 5		"	"
	t_{PHL}	101	IN	GND	OUT	"				4.5 V	"	1 to 3		60	"
	"	102	GND	IN	OUT	"				"	"	2 to 3		"	"
	"	103				"	OUT	IN	GND	"	"	6 to 5		"	"
	"	104				"	OUT	GND	IN	"	"	7 to 5		"	"
	t_{TLH}	105	IN	IN	OUT	"				"	"	3		33.5	"
	t_{TLH}	106				"	OUT	IN	IN	"	"	5		33.5	"
	t_{THL}	107	IN	IN	OUT	"				"	"	3		25	"
	t_{THL}	108				"	OUT	IN	IN	"	"	5		25	"

TABLE III. Group A inspection for device type 10.

Subgroup	Symbol	Test no.	1 1A	2 1B	3 1Y	4 GND	5 2Y	6 2A	7 2B	8 V_{CC}	Notes	Measured terminal	Test limits Min	Test limits Max	Unit
1	V_{IC}	1	-12 mA	4.5 V		GND				4.5 V	See figure	1 to 4		-1.5	V
T_A =	"	2	4.5 V	-12 mA		"				"	5 for test	2 to 4		"	"
+25°C	"	3				"		-12 mA	4.5 V	"	circuit	6 to 4		"	"
	"	4				"		4.5 V	-12 mA	"	"	7 to 4		"	"
	I_{IH1}	5	2.4 V	GND		"				5.5 V	"	1 to 4		40	µA
	"	6	GND	2.4 V		"				"	"	2 to 4		"	"
	"	7				"		2.4 V	GND	"	"	6 to 4		"	"
	"	8				"		GND	2.4 V	"	"	7 to 4		"	"
	I_{IH2}	9	5.5 V	GND		"				"	"	1 to 4		1	mA
	"	10	GND	5.5 V		"				"	"	2 to 4		"	"
	"	11				"		5.5 V	GND	"	"	6 to 4		"	"
	"	12				"		GND	5.5 V	"	"	7 to 4		"	"
	I_{IL1}	13	0.4 V	GND		"				"	"	1 to 4		-1.6	mA
	"	14	GND	0.4 V		"				"	"	2 to 4		"	"
	"	15				"		0.4 V	GND	"	"	6 to 4		"	"
	"	16				"		GND	0.4 V	"	"	7 to 4		"	"
	I_{CCH5}	17	GND	GND		"		GND	GND	"	"	8		19	"
	I_{CCL8}	18	5.5 V	5.5 V		"		5.5 V	5.5 V	"	"	8		85	"
	V_{OL4}	19	2 V	2 V	100 mA	"				4.5 V	"	3 to 4		0.5	V
	V_{OL4}	20				"	100 mA	2 V	2 V	"	"	5 to 4		0.5	"
	V_{OL8}	21	2 V	2 V	300 mA	"				"	"	3 to 4		0.8	"
	V_{OL8}	22				"	300 mA	2 V	2 V	"	"	5 to 4		0.8	"
	I_{OH4}	23	0.8 V	0.8 V	30 V	"				"	"	3		300	µA
	I_{OH4}	24				"	30 V	0.8 V	0.8 V	"	"	5		300	"

TABLE III. Group A inspection for device type 10 - Continued.

Subgroup	Symbol	Test no.	1 1A	2 1B	3 1Y	4 GND	5 2Y	6 2A	7 2B	8 V_{CC}	Notes	Measured terminal	Test limits Min	Test limits Max	Unit
2	V_{IC}	25	-12 mA	4.5 V		GND				4.5 V	See figure	1 to 4		-1.5	V
T_A =	"	26	4.5 V	-12 mA		"				"	5 for test	2 to 4		"	"
+125°C	"	27				"		-12 mA	4.5 V	"	circuit	6 to 4		"	"
	"	28				"		4.5 V	-12 mA	"	"	7 to 4		"	"
	I_{IH1}	29	2.4 V	GND		"				5.5 V	"	1 to 4		40	µA
	"	30	GND	2.4 V		"				"	"	2 to 4		"	"
	"	31				"		2.4 V	GND	"	"	6 to 4		"	"
	"	32				"		GND	2.4 V	"	"	7 to 4		"	"
	I_{IH2}	33	5.5 V	GND		"				"	"	1 to 4		1	mA
	"	34	GND	5.5 V		"				"	"	2 to 4		"	"
	"	35				"		5.5 V	GND	"	"	6 to 4		"	"
	"	36				"		GND	5.5 V	"	"	7 to 4		"	"
	I_{IL1}	37	0.4 V	GND		"				"	"	1 to 4		-1.6	mA
	"	38	GND	0.4 V		"				"	"	2 to 4		"	"
	"	39				"		0.4 V	GND	"	"	6 to 4		"	"
	"	40				"		GND	0.4 V	"	"	7 to 4		"	"
	I_{CCH5}	41	GND	GND		"		GND	GND	"	"	8		19	"
	I_{CCL8}	42	5.5 V	5.5 V		"		5.5 V	5.5 V	"	"	8		85	"
	V_{OL4}	43	2 V	2 V	100 mA	"				4.5 V	"	3 to 4		0.5	V
	V_{OL4}	44				"	100 mA	2 V	2 V	"	"	5 to 4		0.5	"
	V_{OL8}	45	2 V	2 V	300 mA	"				"	"	3 to 4		0.8	"
	V_{OL8}	46				"	300 mA	2 V	2 V	"	"	5 to 4		0.8	"
	I_{OH4}	47	0.8 V	0.8 V	30 V	"				"	"	3		300	µA
	I_{OH4}	48				"	30 V	0.8 V	0.8 V	"	"	5		300	"

TABLE III. Group A inspection for device type 10 - Continued.

Subgroup	Symbol	Test no.	1 1A	2 1B	3 1Y	4 GND	5 2Y	6 2A	7 2B	8 V_{CC}	Notes	Measured terminal	Test limits Min	Test limits Max	Unit
3	V_{IC}	49	-12 mA	4.5 V		GND				4.5 V	See figure	1 to 4		-1.5	V
T_A =	"	50	4.5 V	-12 mA		"				"	5 for test	2 to 4		"	"
-55°C	"	51				"		-12 mA	4.5 V	"	circuit	6 to 4		"	"
	"	52				"		4.5 V	-12 mA	"	"	7 to 4		"	"
	I_{IH1}	53	2.4 V	GND		"				5.5 V	"	1 to 4		40	µA
	"	54	GND	2.4 V		"				"	"	2 to 4		"	"
	"	55				"		2.4 V	GND	"	"	6 to 4		"	"
	"	56				"		GND	2.4 V	"	"	7 to 4		"	"
	I_{IH2}	57	5.5 V	GND		"				"	"	1 to 4		1	mA
	"	58	GND	5.5 V		"				"	"	2 to 4		"	"
	"	59				"		5.5 V	GND	"	"	6 to 4		"	"
	"	60				"		GND	5.5 V	"	"	7 to 4		"	"
	I_{IL1}	61	0.4 V	GND		"				"	"	1 to 4		-1.6	mA
	"	62	GND	0.4 V		"				"	"	2 to 4		"	"
	"	63				"		0.4 V	GND	"	"	6 to 4		"	"
	"	64				"		GND	0.4 V	"	"	7 to 4		"	"
	I_{CCH5}	65	GND	GND		"		GND	GND	"	"	8		19	"
	I_{CCL8}	66	5.5 V	5.5 V		"		5.5 V	5.5 V	"	"	8		85	"
	V_{OL4}	67	2 V	2 V	100 mA	"				4.5 V	"	3 to 4		0.5	V
	V_{OL4}	68				"	100 mA	2 V	2 V	"	"	5 to 4		0.5	"
	V_{OL8}	69	2 V	2 V	300 mA	"				"	"	3 to 4		0.8	"
	V_{OL8}	70				"	300 mA	2 V	2 V	"	"	5 to 4		0.8	"
	I_{OH4}	71	0.8 V	0.8 V	30 V	"				"	"	3		300	µA
	I_{OH4}	72				"	30 V	0.8 V	0.8 V	"	"	5		300	"

TABLE III. Group A inspection for device type 10 – Continued.

Subgroup	Symbol	Test no.	1 1A	2 1B	3 1Y	4 GND	5 2Y	6 2A	7 2B	8 V_{CC}	Notes	Measured terminal	Test limits Min	Test limits Max	Unit
9	t_{PLH}	73	IN	GND	OUT	GND				4.5 V	See figure 9	1 to 3		65	ns
T_A =	"	74	GND	IN	OUT	"				"	for test	2 to 3		"	"
+25°C	"	75				"	OUT	IN	GND	"	circuit and	6 to 5		"	"
	"	76				"	OUT	GND	IN	"	waveforms	7 to 5		"	"
	t_{PHL}	77	IN	GND	OUT	"				4.5 V	"	1 to 3		50	"
	"	78	GND	IN	OUT	"				"	"	2 to 3		"	"
	"	79				"	OUT	IN	GND	"	"	6 to 5		"	"
	"	80				"	OUT	GND	IN	"	"	7 to 5		"	"
	t_{TLH}	81	IN	IN	OUT	"				"	"	3		20	"
	t_{TLH}	82				"	OUT	IN	IN	"	"	5		"	"
	t_{THL}	83	IN	IN	OUT	"				"	"	3		"	"
	t_{THL}	84				"	OUT	IN	IN	"	"	5		"	"
10	t_{PLH}	85	IN	GND	OUT	GND				4.5 V	"	1 to 3		90	ns
T_A =	"	86	GND	IN	OUT	"				"	"	2 to 3		"	"
+125°C	"	87				"	OUT	IN	GND	"	"	6 to 5		"	"
	"	88				"	OUT	GND	IN	"	"	7 to 5		"	"
	t_{PHL}	89	IN	GND	OUT	"				4.5 V	"	1 to 3		75	"
	"	90	GND	IN	OUT	"				"	"	2 to 3		"	"
	"	91				"	OUT	IN	GND	"	"	6 to 5		"	"
	"	92				"	OUT	GND	IN	"	"	7 to 5		"	"
	t_{TLH}	93	IN	IN	OUT	"				"	"	3		26.5	"
	t_{TLH}	94				"	OUT	IN	IN	"	"	5		26.5	"
	t_{THL}	95	IN	IN	OUT	"				"	"	3		25	"
	t_{THL}	96				"	OUT	IN	IN	"	"	5		25	"

TABLE III. Group A inspection for device type 10 - Continued.

Subgroup	Symbol	Test no.	1 1A	2 1B	3 1Y	4 GND	5 2Y	6 2A	7 2B	8 V_{CC}	Notes	Measured terminal	Test limits Min	Test limits Max	Unit
11	t_{PLH}	97	IN	GND	OUT	GND				4.5 V	See figure9	1 to 3		90	ns
T_A =	"	98	GND	IN	OUT	"				"	for test	2 to 3		"	"
-55°C	"	99				"	OUT	IN	GND	"	circuit and	6 to 5		"	"
	"	100				"	OUT	GND	IN	"	waveforms	7 to 5		"	"
	t_{PHL}	101	IN	GND	OUT	"				4.5 V	"	1 to 3		75	"
	"	102	GND	IN	OUT	"				"	"	2 to 3		"	"
	"	103				"	OUT	IN	GND	"	"	6 to 5		"	"
	"	104				"	OUT	GND	IN	"	"	7 to 5		"	"
	t_{TLH}	105	IN	IN	OUT	"				"	"	3		26.5	"
	t_{TLH}	106				"	OUT	IN	IN	"	"	5		26.5	"
	t_{THL}	107	IN	IN	OUT	"				"	"	3		25	"
	t_{THL}	108				"	OUT	IN	IN	"	"	5		25	"

4.4 Technology Conformance inspection (TCI). Technology conformance inspection shall be in accordance with MIL-PRF-38535 and herein for groups A, B, C, and D inspections (see 4.4.1 through 4.4.4).

4.4.1 Group A inspection. Group A inspection shall be in accordance with table III of MIL-PRF-38535 and as follows:

a. Tests shall be as specified in table II herein.

b. Subgroups 4, 5, 6, 7, and 8 in table I shall be omitted.

4.4.2 Group B inspection. Group B inspection shall be in accordance with table II of MIL-PRF-38535.

4.4.3 Group C inspection. Group C inspection shall be in accordance with table IV of MIL-PRF-38535 and as follows:

a. End point electrical parameters shall be as specified in table II herein.

b. The steady-state life test duration, test condition, and test temperature, or approved alternatives shall be as specified in the device manufacturer's QM plan in accordance with MIL-PRF-38535. The burn-in test circuit shall be maintained under document control by the device manufacturer's Technology Review Board (TRB) in accordance with MIL-PRF-38535 and shall be made available to the acquiring or preparing activity upon request. The test circuit shall specify the inputs, outputs, biases, and power dissipation, as applicable, in accordance with the intent specified in test method 1005 of MIL-STD-883.

4.4.4 Group D inspection. Group D inspection shall be in accordance with table V of MIL-PRF-38535. End point electrical parameters shall be as specified in table II herein.

4.5 Methods of inspection. Methods of inspection shall be specified and as follows.

4.5.1 Voltage and current. All voltage values given are referenced to the ground terminal of the device under test (DUT). Currents values given are for conventional current and are positive when flowing into the referenced terminal.

5. PACKAGING

5.1 Packaging requirements. For acquisition purposes, the packaging requirements shall be as specified in the contract or order (see 6.2). When actual packaging of materiel is to be performed by DoD personnel, these personnel need to contact the responsible packaging activity to ascertain requisite packaging requirements. Packaging requirements are maintained by the Inventory Control Point's packaging activity within the Military Department of Defense Agency, or within the Military Department's System Command. Packaging data retrieval is available from the managing Military Department's or Defense Agency's automated packaging files, CD-ROM products, or by contacting the responsible packaging activity.

TABLE IV. Group C end-point electrical parameters.

$\pm V_{CC} = \pm 4.5$ V, $T_A = +25°C$

(Device types 01 through 10)

Test	Limits		Delta	Unit
	Min	Max		
I_{OH}	---	300	±50	μA

6. NOTES

6.1 Intended use. Microcircuits conforming to this specification are intended for original equipment design applications and logistic support of existing equipment.

6.2 Acquisition requirements. Acquisition documents should specify the following:

a. Title, number, and date of the specification.

b. Pin and compliance identifier, if applicable (see 1.2).

c. Requirements for delivery of one copy of the conformance inspection data pertinent to the device inspection lot to be supplied with each shipment by the device manufacturer, if applicable.

d. Requirements for certificate of compliance, if applicable.

e. Requirements for notification of change of product or process to acquiring activity in addition to notification of the qualifying activity, if applicable.

f. Requirements for failure analysis (including required test condition of MIL-STD-883, method 5003), corrective action and reporting of results, if applicable.

g. Requirements for product assurance options.

h. Requirements for special carriers, lead lengths, or lead forming, if applicable. These requirements should not affect the part number. Unless otherwise specified, these requirements will not apply to direct purchase by or direct shipment to the Government.

i. Requirements for "JAN" marking.

j. Packaging requirements (see 5.1).

6.3 Superseding information. The requirements of MIL-M-38510 have been superseded to take advantage of the available Qualified Manufacturer Listing (QML) system provided by MIL-PRF-38535. Previous references to MIL-M-38510 in this document have been replaced by appropriate references to MIL-PRF-38535. All technical requirements now consist of this specification and MIL-PRF-38535. The MIL-M-38510 specification sheet number and PIN have been retained to avoid adversely impacting existing government logistics systems and contractor's parts lists.

6.4 Qualification. With respect to products requiring qualification, awards will be made only for products which are, at the time of award of contract, qualified for inclusion in Qualified Manufacturers List QML-38535 whether or not such products have actually been so listed by that date. The attention of the contractors is called to these requirements, and manufacturers are urged to arrange to have the products that they propose to offer to the Federal Government tested for qualification in order that they may be eligible to be awarded contracts or purchase orders for the products covered by this specification. Information pertaining to qualification of products may be obtained from DSCC-VQ, 3990 E. Broad Street, Columbus, Ohio 43218-3990.

6.5 Abbreviations, symbols, and definitions. The abbreviations, symbols, and definitions used herein are defined in MIL-PRF-38535, MIL-STD-1331, and as follows:

V_{IC}	Input clamp voltage.
I_{IH}	High level input current (V_{IN} = 2.4 or 5.5 V).
I_{IL}	Low level input current (with V_{IN} = 0.4).
I_{CCH}	High level supply current. This is the supply current with the output high.
I_{CCL}	Low level supply current. This is the supply current with the output low.
V_{OL}	Low level output voltage. This at rated load for the TTL gates.
I_{OH}	High level output current.
V_{OH}	High level output voltage, TTL gate.
I_{OS}	Short circuit output current TTL gate.
V_{CBO}	Collector base breakdown voltage, separate transistor.
V_{CER}	Collector base breakdown voltage with R_{BE} = 500 ohms.
V_{CEO}	Collector emitter breakdown voltage.
V_{BEO}	Emitter base breakdown voltage.
h_{FE}	Static forward current transfer ratio.
V_{BE}	Base emitter voltage.
$V_{CE(SAT)}$	Collector emitter saturation voltage.
t_D	Delay time.
t_R	Rise time.
t_S	Storage time.
t_F	Fall time.
t_{PLH}	Propagation delay time (low to high level output transition).
t_{PHL}	Propagation delay time (high to low level output transition).
t_{TLH}	Transition time (low to high level output transition).
t_{THL}	Transition time (high to low level output transition).

6.6 Logistic support. Lead materials and finishes (see 3.3) are interchangeable. Unless otherwise specified, microcircuits acquired for Government logistic support will be acquired to device class B (see 1.2.2), lead material and finish A (see 3.4). Longer length leads and lead forming should not affect the part number.

6.7 Substitutability. The cross-reference information below is presented for the convenience of users. Microcircuits covered by this specification will functionally replace the listed generic-industry type. Generic-industry microcircuit types may not have equivalent operational performance characteristics across military temperature ranges or reliability factors equivalent to MIL-M-38510 device types and may have slight physical variations in relation to case size. The presence of this information should not be deemed as permitting substitution of generic-industry types for MIL-M-38510 types or as a waiver of any of the provisions of MIL-PRF-38535.

Military device type	Generic-industry type
01	55450
02	55451
03	55452
04	55453
05	55454
06	55460
07	55461
08	55462
09	55463
10	55464

6.8 Changes from previous issue. Marginal notations are not used in this revision to identify changes with respect to the previous issue, due to the extensiveness of the changes.

Custodians:
Army – CR
Navy - EC
Air Force - 11
NASA - NA
DLA – CC

Review activities:
Army - MI, SM
Navy - AS, CG, SH, TD
Air Force – 03, 19, 99

Preparing activity:
DLA - CC

Project 5962-2081

NOTE: The activities listed above were interested in this document as of this date of this document. Since organizations and responsibilities can change, you should verify the currency of the information above using the ASSIST Online database at http://assist.daps.dla.mil.