INCH-POUND
MIL-M-38510/121B
13 September 2004
SUPERSEDING
MIL-M-38510/121A
4 June 1984

MILITARY SPECIFICATION

MICROCIRCUITS, LINEAR MONOLITHIC AND MULTICHIP, SILICON 12 BIT DIGITAL-TO-ANALOG CONVERTERS

This specification is approved for use by all Departments and Agencies of the Department of Defense.

Reactivated for new design as of 13 September 2004. May be used for either new or existing design acquisitio

The requirements for acquiring the product herein shall consist of this specification sheet and MIL-PRF-38535

1. SCOPE

1.1 Scope. This specification covers the detail requirements for monolithic silicon, bipolar, interface, memory core drivers. Two product assurance classes and a choice of case outlines and lead finishes are provided and are reflected in the complete part number. For this product, the requirements of MIL-M-38510 have been superseded by MIL-PRF-38535, (see 6.3)

1.2 Part or Identifying Number (PIN). The PIN is in accordance with MIL-PRF-38535, and as specified herein.

1.2.1 Device types. The device types are as follows:

Device type	Circuit
01	D/A converter, 12 bit, external reference
02	D/A converter, 12 bit, internal reference
03	D/A converter, 12 bit, internal reference high speed
04	D/A converter, 12 bit, external reference high speed

1.2.2 Device class. The device class is the product assurance level as defined in MIL-PRF-38535.

1.2.3 Case outline. The case outlines are as designated in MIL-STD-1835 and as follows:

Outline letter	Descriptive designator	Terminals	Package style
J	GDIP1-T24 or CDIP2-T24	24	Dual-in-line

Comments, suggestions, or questions on this document should be addressed to: Commander, Defense Supply Center Columbus, ATTN: DSCC-VAS, 3990 East Broad St., Columbus, OH 43218-3990, or emailed to bipolar@dscc.dla.mil. Since contact information can change, you may want to verify the currency of this address information using the ASSIST Online database at www.dodssp.daps.mil.

1.3 Absolute maximum ratings.

	01, 02	03, 04
Supply voltage ($\pm V_S$)	±18 V dc	±18 V dc
Reference voltage, Hi input	$\pm V_S$	±12 V dc
Reference voltage, Lo input	$\pm V_S$	
Digital inputs	$\pm V_S$	-1, +7 V dc
Bipolar offset to analog common	$\pm V_S$	±12 V dc
10 V span R to analog common	$\pm V_S$	±12 V dc
20 V span R to analog common	$\pm V_S$	±24 V dc
DAC output voltage	$\pm V_S$, -5 V	-3, 12 V dc
Power ground to reference ground	----	±1 V dc
Lead temperature (soldering – 10 V seconds)	+300°C	
Junction temperature (T_J)	+175°C	
Storage temperature range	-65°C to +150°C	

1.4 Recommended operating conditions.

Supply voltage range (V_{CC}):	
Device type 01	4.5 V to 16.5 V
Device type 02	4.75 V to 15.75 V
Device type 03	13.5 V to 16.5 V
Device type 04	Not required
Supply voltage range (V_{EE}):	
Device types 01, 03, and 04	-15 V ± 1.5 V
Device type 02	-15 V ± 0.75 V
Reference voltage:	
Device types 01, 03, and 04	10.000 V
Device type 02	2.500 V
Output compliance voltage	0 V dc
Logic thresholds:	
TTL logic “0”	0.8 V dc maximum
TTL logic “1”	2.0 V dc minimum
CMOS logic “0” (devices 01 and 02)	30% V_{CC} maximum
CMOS logic “1” (devices 01 and 02)	70% V_{CC} minimum
Ambient operating temeperature range (T_A)	-55°C to +125°C

1.5 Power and thermal characteristics.

Case outline	Maximum allowable power dissipation	Maximum θ_{JC}	Maximum θ_{JA}
J	1 W @ T_A = 125°C	40°C/W	50°C/W

2. APPLICABLE DOCUMENTS

2.1 General. The documents listed in this section are specified in sections 3, 4, or 5 of this specification. This section does not include documents cited in other sections of this specification or recommended for additional information or as examples. While every effort has been made to ensure the completeness of this list, document users are cautioned that they must meet all specified requirements of documents cited in sections 3, 4, or 5 of this specification, whether or not they are listed.

2.2 Government documents.

2.2.1 Specifications and Standards. The following specifications and standards form a part of this specification to the extent specified herein. Unless otherwise specified, the issues of these documents are those cited in the solicitation or contract.

DEPARTMENT OF DEFENSE SPECIFICATIONS

MIL-PRF-38535 - Integrated Circuits (Microcircuits) Manufacturing, General Specification for.

DEPARTMENT OF DEFENSE STANDARDS

MIL-STD-883 - Test Method Standard for Microelectronics.
MIL-STD-1835 - Interface Standard Electronic Component Case Outlines.

(Copies of these documents are available online at http://assist.daps.dla.mil/quicksearch/ or www.dodssp.daps.mil or from the Standardization Document Order Desk, 700 Robbins Avenue, Building 4D, Philadelphia, PA 19111-5094.

2.3 Order of precedence. In the event of a conflict between the text of this document and the references cited herein, the text of this document takes precedence. Nothing in this document, however, supersedes applicable laws and regulations unless a specific exemption has been obtained.

3. REQUIREMENTS

3.1 Qualification. Microcircuits furnished under this specification shall be products that are manufactured by a manufacturer authorized by the qualifying activity for listing on the applicable qualified manufacturers list before contract award (see 4.3 and 6.4).

3.2 Item requirements. The individual item requirements shall be in accordance with MIL-PRF-38535 and as specified herein or as modified in the device manufacturer's Quality Management (QM) plan. The modification in the QM plan shall not affect the form, fit, or function as described herein.

3.3 Design, construction, and physical dimensions. The design, construction, and physical dimensions shall be as specified in MIL-PRF-38535 and herein.

3.3.1 Terminal connections. The terminal connections shall be as specified on figure 1.

3.3.2 Schematic circuits. The schematic circuits shall be maintained by the manufacturer and made available to the qualifying activity and the preparing activity (DSCC-VA) upon request.

3.3.3 Case outlines. The case outlines shall be as specified in 1.2.3.

3.4 Lead material and finish. The lead material and finish shall be in accordance with MIL-PRF-38535 (see 6.6).

3.5 Electrical performance characteristics. The electrical performance characteristics are as specified in table I, and apply over the full recommended ambient operating temperature range, unless otherwise specified.

3.6 Electrical test requirements. Electrical test requirements for each device class shall be the subgroups specified in table II. The electrical tests for each subgroup are described in table III.

3.8 Marking. Marking shall be in accordance with MIL-PRF-38535.

3.9 Microcircuit group assignment. The devices covered by this specification shall be in microcircuit group number 56 (see MIL-PRF-38535, appendix A).

TABLE I. Electrical performance characteristics.

Characteristics	Symbol	Conditions 1/ 2/ 3/ -55°C ≤ T_A ≤ +125°C unless otherwise specified		Device type	Limits Min	Limits Max	Unit
Monotonicity	----	Guaranteed by the bit linearity and major carry error tests.		01, 02	12		Bits
				03, 04	12		
Supply current from V_{CC}	I_{CC}	V_{CC} = 15 V, All input bits = 10.5 V		01	+3	+18	mA
				02	+3	+20	
		All input bits = 2.4 V 4/		03	1	5	
Supply current from V_{EE}	I_{EE}	V_{CC} = 15 V, All input bits = 4.5 V		01, 02	-25	-5	mA
		All input bits = 0.8 V		03, 04	-18	-5	
Logic "1" input current	I_{IH}	V_{CC} = 15 V, V_{IN} (logic "1") = 10.5 V,		01, 02	-1	+100	µA
				03	-300	300	
		Each input measured separately, V_{IN} (logic "1") = 5.5 V		04	145	300	
Logic "0" input current	I_{IL}	V_{CC} = 15 V, V_{IN} (logic "0") = 0 V,		01, 02	-200	+1	µA
				03	-100	100	
		Each input measured separately,		04	5	100	
Full scale current	I_{FS}	All inputs logic "1", V_O = 0 V		01, 02, 03, 04	-2.7	-1.6	mA
Zero scale current (TTL)	I_{ZS1}	All inputs logic "0", 5/ V_O = 0 V, T_A = 25°C		01, 02, 03, 04	-2	2	LSB
		-55°C ≤ T_A ≤ 125°C		01, 02, 03, 04	-3	3	
Zero scale current (CMOS)	I_{ZS2}	All input bits = 4.5 V, 5/ V_O = 0 V, V_{CC} = 15 V, T_A = 25°C		01, 02	-2	2	LSB
		-55°C ≤ T_A ≤ 125°C		01, 02	-3	3	
Zero scale current drift	dI_{ZS}/dt	25°C to 125°C and 5/ 25°C to -55°C		01, 02, 03, 04	-0.01	0.01	LSB/°C
Gain error (TTL)	A_{E1}	All inputs = Logic "1" 5/ 6/	T_A = 25°C	01, 03, 04	-0.20	+0.20	%
				02	-0.16	+0.16	
			T_A = 125°C	01	-0.25	+0.25	
				02	-0.46	+0.46	
				03	-0.50	+0.50	
				04	-0.30	+0.30	
			T_A = -55°C	01	-0.24	+0.24	
				02	-0.40	+0.40	
				03	-0.44	+0.44	
				04	-0.28	+0.28	

See footnotes at end of table.

TABLE I. Electrical performance characteristics – Continued.

Characteristics	Symbol	Conditions 1/ 2/ 3/ -55°C ≤ T_A ≤ +125°C unless otherwise specified		Device type	Limits Min	Limits Max	Unit
Gain error (CMOS)	A_{E2}	Logic "1" = 10.5 V, VCC = 15 V, T_A = 25°C 5/ 6/		01	-0.20	+0.20	%
				02	-0.16	+0.16	
Bipolar gain error	B_{PAE}	Over ±10 V output range, T_A = 25°C, 5/ 6/		01, 03, 04	-0.20	+0.20	%
				02	-0.16	+0.16	
Gain drift	d_{AE1}/dt	From 25°C to 125°C and 25°C to -55°C 5/		01	-5	+5	PPM/C°
				02, 03	-30	+30	
				04	-10	10	
Reference output voltage	V_{REF}	All logic bits logic "0", V_{CC} = 15 V, V_{EE} = -15 V		02	2.45	2.55	V
				03	9.90	10.1	
Bipolar offset error	B_{POE}	All inputs = Logic "0" 5/ 7/	T_A = 25°C	01, 03, 04	-8	+8	LSB
				02	-6.5	+6.5	
			T_A = 125°C	01	-10.0	+10.0	
				02	-18.5	+18.5	
				03	-20.0	+20.0	
				04	-12.0	+12.0	
			T_A = -55°C	01	-9.6	+9.6	
				02	-16.1	+16.1	
				03	-17.6	+17.6	
				04	-11.2	+11.2	
Bipolar offset drift	dB_{POE} dt	From 25°C to 125°C and 25°C to -55°C 5/		01	-0.02	0.02	LSB/°C
				02, 03	-0.12	0.12	
				04	-0.04	0.04	
Bipolar zero error (TTL)	B_{ZE}	Input bits = 4,000 (octal) 5/	T_A = 25°C	01	-6.5	6.5	LSB
				02	-6.5	6.5	
				03, 04	-6.0	6.0	
			T_A = 125°C	01	-8.5	+8.5	
				02	-10.5	+10.5	
				03, 04	-10.0	+10.0	
			T_A = -55°C	01	-8.1	+8.1	
				02	-9.7	+9.7	
				03, 04	-9.2	+9.2	
Bipolar zero drift	dB_{ZE} dt	From 25°C to 125°C and 25°C to -55°C 5/		01	-0.02	0.02	LSB/°C
				02, 03, 04	-0.04	0.04	

See footnotes at end of table.

TABLE I. Electrical performance characteristics – Continued.

Characteristics	Symbol	Conditions 1/ 2/ 3/ $-55°C \le T_A \le +125°C$ unless otherwise specified	Device type	Limits		Unit
				Min	Max	
Power supply sensitivity from V_{CC} at full scale (TTL)	$+P_{SS1}$	V_{CC} = 5 ±0.5 V, 8/ T_A = 25°C, V_{CC} = 5 ±0.25 V	01	-0.04	0.04	LSB/%PS
			02	-0.15	0.15	
		V_{CC} = 5 ±0.5 V, 8/ -55°C ≤ T_A ≤ 125°C, V_{CC} = 5 ±0.25 V	01	-0.07	0.07	
			02	-0.25	0.25	
Power supply sensitivity from V_{CC} at full scale (CMOS)	$+P_{SS2}$	V_{CC} = 15 ±1.5 V, 8/ T_A = 25°C, V_{CC} = 15 ±0.75 V, V_{CC} = 15 ±1.5 V, 12 ± 0.6 V	01	-0.04	0.04	LSB/%PS
			02	-0.15	0.15	
			03	-0.04	0.04	
		V_{CC} = 15 ±1.5 V, 8/ -55°C ≤ T_A ≤ 125°C, V_{CC} = 15 ±0.75 V, V_{CC} = 15 ±1.5 V, 12 ± 0.6 V	01	-0.07	0.07	
			02	-0.25	0.25	
			03	-0.08	0.08	
Power supply sensitivity from V_{EE} at full scale	$-P_{SS}$	V_{EE} = -15 ±1.5 V, 8/ T_A = 25°C, V_{EE} = -15 ±0.75 V, V_{EE} = -15 ±1.5 V, -12 ± 0.6 V	01	-0.07	0.07	LSB/%PS
			02	-0.25	0.25	
			03,04	-0.1	0.1	
		V_{EE} = -15 ±1.5 V, 8/ -55°C ≤ T_A ≤ 125°C, V_{EE} = -15 ±0.75 V, V_{EE} = -15 ±1.5 V, -12 ± 0.6 V	01	-0.15	0.15	
			02	-0.5	0.5	
			03,04	-0.2	0.2	
Bit linearity error	LE	Subgroups 1, 2, and 3 abbrev. codes test. Subgroups 7 and 8 all codes test. 5/ 9/	01, 02, 03, 04	-0.5	0.5	LSB
Major carry error (differential linearity)	MCE	The difference between adjacent codes at all major transitions (i.e. 0111 1111 1111 to 1000 0000 0000). 5/ 8/	01, 02, 03, 04	-1.0	+1.0	LSB
Output current settling time, zero to full-scale	t_{SLH}	All inputs switched simultaneously. Measure the time to settle to within ½ LSB of the final value. T_A = 25°C, See figures 3 and 4	01, 02	----	3.0	µs
			03	----	400	ns
			04	----	600	
Output current settling time, full-scale to zero	t_{SHL}	All inputs switched simultaneously. Measure the time to settle to within ½ LSB of the final value. T_A = 25°C, See figures 3 and 4	01, 02		3.0	µs
			03		400	ns
			04		600	

See footnotes at end of table.

TABLE I. Electrical performance characteristics – Continued.

Characteristics	Symbol	Conditions $-55°C \le T_A \le +125°C$ unless otherwise specified	Device type	Limits		Unit
				Min	Max	
Reference input resistance	Ri	V_{REF} = 10 V, T_A = 25°C, See figure 5	01, 03, 04	15	25	kΩ
Output noise voltage	N_O	V_{CC} = 15 V, BW = 10 Hz to 100 kHz, T_A = 25°C, See figure 6	01	----	60	μVrms
			02	----	100	
			03	----	80	
			04	----	60	

1/ V_{CC} = 5.0 V for device types 01 and 02 and 15 V for device type 03, V_{EE} = -15.0 V, V_{ref} = 10.000 V, Logic "0" = 0.8 V, Logic "1" = 2.0 V, see figure 2 and table III.

2/ The output compliance voltage range (see 6.5) may vary for each vendor. Devices with a definite output resistance will draw additional current that is equal to the output compliance voltage divided by the device output resistance.

3/ See paragraph 6.5 for symbols and definitions.

4/ V_{CC} not used for device 04.

5/ These parameters are to be tested in a power stable temperature condition (see MIL-STD-883 4.5.9.4). All other parameters will be tested using low duty cycle pulse testing (i.e., $T_A = T_J = T_C$ (see MIL-STD-883, 4.5.9.1, 4.5.9.2, and 4.5.9.3)).

6/ The gain error of a 12 bit D/A converter in % corresponds to a zero scale to full-scale range error in LSB units. (i.e. ±0.2% X 4096 LSB/100% =8.2 LSB)

7/ B_{POE} is the error in the –10 V output voltage when the device is operated in the bipolar mode with all bits off.

8/ This test is performed in the unipolar mode over a 0 to 10 V range. The unipolar scale factor is 4096 LSB/10 V = 410 LSB/V. The bipolar factor is 4096 LSB/20 V = 205 LSB/ V.

9/ The manufacturer has the option of testing devices at all digital input codes or an abbreviated series of codes. The abbreviated test should have a sufficient number of codes with or without limit guard banding such that an all codes test will not fail a device which passed the abbreviated test.

4. VERIFICATION.

4.1 Sampling and inspection. Sampling and inspection procedures shall be in accordance with MIL-PRF-38535 or as modified in the device manufacturer's Quality Management (QM) plan. The modification in the QM plan shall not effect the form, fit, or function as function as described herein.

4.2 Screening. Screening shall be in accordance with MIL-PRF-38535, and shall be conducted on all devices prior to qualification and quality conformance inspection. The following additional criteria shall apply:

a. The burn-in test duration, test condition, and test temperature, or approved alternatives shall be as specified in the device manufacturer's QM plan in accordance with MIL-PRF-38535. The burn-in test circuit shall be maintained under document control by the device manufacturer's Technology Review Board (TRB) in accordance with MIL-PRF-38535 and shall be made available to the acquiring or preparing activity upon request. The test circuit shall specify the inputs, outputs, biases, and power dissipation, as applicable, in accordance with the intent specified in test method 1015 of MIL-STD-883.

NOTE: If accelerated high-temperature test conditions are used, the device manufacturer shall ensure that at least 85 percent of the applied voltage is dropped across the device at temperature. The device is not considered functional under accelerated test conditions.

b. Interim and final electrical test parameters shall be as specified in table II, except interim electrical parameters test prior to burn-in is optional at the discretion of the manufacturer.

c. Additional screening for space level product shall be as specified in MIL-PRF-38535.

4.3 Qualification inspection. Qualification inspection shall be in accordance with MIL-PRF-38535.

4.4 Technology Conformance inspection (TCI). Technology conformance inspection shall be in accordance with MIL-PRF-38535 and herein for groups A, B, C, and D inspections (see 4.4.1 through 4.4.4).

TABLE II. Electrical test requirements.

MIL-PRF-38535 test requirements	Subgroups (see table III)	
	Class S devices	Class B devices
Interim electrical parameters	1	1
Final electrical test parameters	1*, 2, 3, 4	1*, 2, 3, 4
Group A test requirements	1,2,3,4,5,6, 7,8,12	1,2,3,4,5,6,7,8,12
Group B electrical test parameters when using the method 5005 QCI option	1,2,3,4,5,6 and table IV delta limits	N/A
Group C end-point electrical parameters	1,2,3,4,5,6 and table IV delta limits	1,4, and table IV delta limits
Additional electrical subgroups for group C periodic inspections	N/A	----
Group D end-point electrical parameters	1,2,3,4,5,6	1,4

* PDA applies to subgroup 1.

Device type	01	02	03	04
Case outline	J			
Terminal number	Terminal symbol			
1	V_{CC} (+)	V_{CC} (+)	NC	NC
2	CMOS/TTL LOGIC THRESHOLD	CMOS/TTL LOGIC THRESHOLD	NC	NC
3	REF V (-)	REFERENCE SUPPLY IN	V_{CC} (+)	REF RET
4	AMPLIFIER SUMMING JUNCTION. NO EXTERNAL CONNECTION.	REFERENCE OUT (+2.5 V ± 3%)	10 V REF OUT	AMP SUMMING JUNCTION
5	REF V (+)	REF GND	REF RET.	REF IN
6	V_{EE} (-)	REFERENCE IN	REF IN	V_{EE} (-)
7	BIPOLAR OFFSET R IN	V_{EE} (-)	V_{EE} (-)	BIPOLAR OFFSET RES. IN
8	BIPOLAR OFFSET R OUT	BIPOLAR OFFSET IN	BIPOLAR OFFSET IN	NC
9	DAC OUT	DAC OUT	DAC OUT	DAC OUT
10	10 V SPAN R	10 V SPAN R	10 V SPAN R	10 V SPAN R
11	20 V SPAN R	20 V SPAN R	20 V SPAN R	20 V SPAN R
12	GND	GND	POWER GND	POWER GND
13	BIT 12 (LSB)	BIT 12 (LSB)	BIT 12 (LSB)	BIT 12 (LSB)
14	BIT 11	BIT 11	BIT 11	BIT 11
15	BIT 10	BIT 10	BIT 10	BIT 10
16	BIT 9	BIT 9	BIT 9	BIT 9
17	BIT 8	BIT 8	BIT 8	BIT 8
18	BIT 7	BIT 7	BIT 7	BIT 7
19	BIT 6	BIT 6	BIT 6	BIT 6
20	BIT 5	BIT 5	BIT 5	BIT 5
21	BIT 4	BIT 4	BIT 4	BIT 4
22	BIT 3	BIT 3	BIT 3	BIT 3
23	BIT 2	BIT 2	BIT 2	BIT 2
24	BIT 1 (MSB)	BIT 1 (MSB)	BIT 1 (MSB)	BIT 1 (MSB)

Figure 1. Terminal connections.

Device type 01

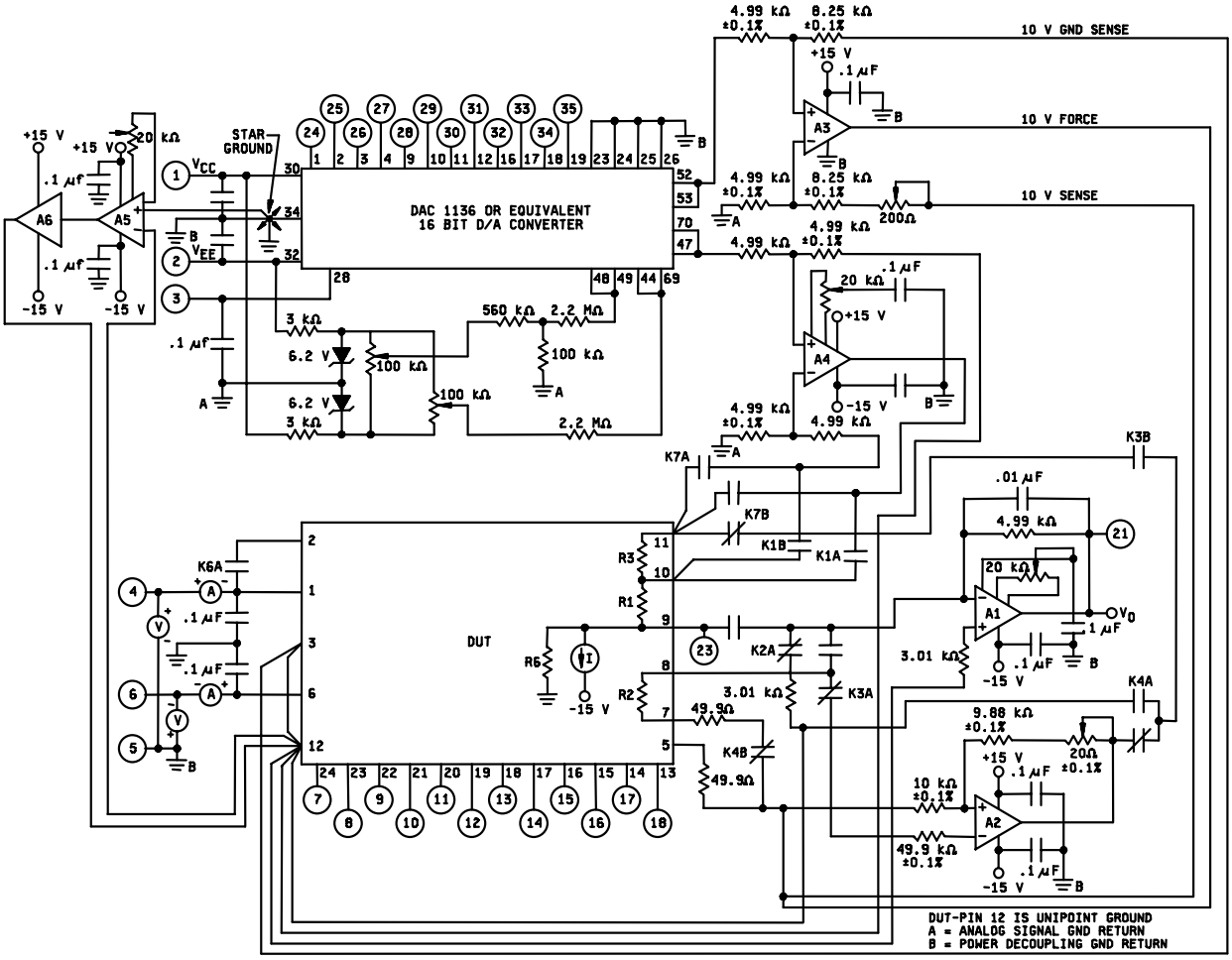

FIGURE 2. Static and dynamic tests circuit.

Device type 02

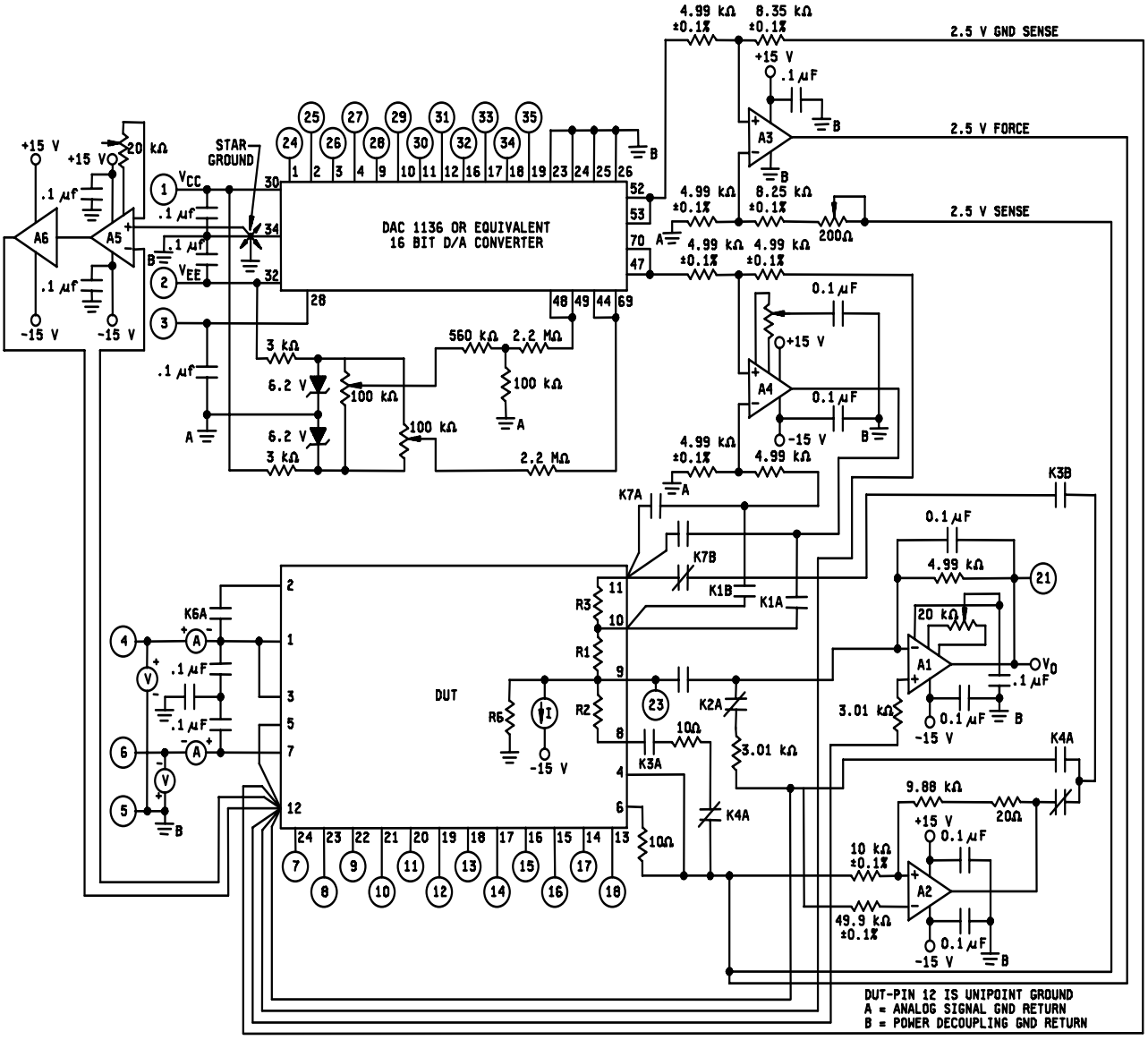

FIGURE 2. Static and dynamic tests circuit – Continued.

Device type 03

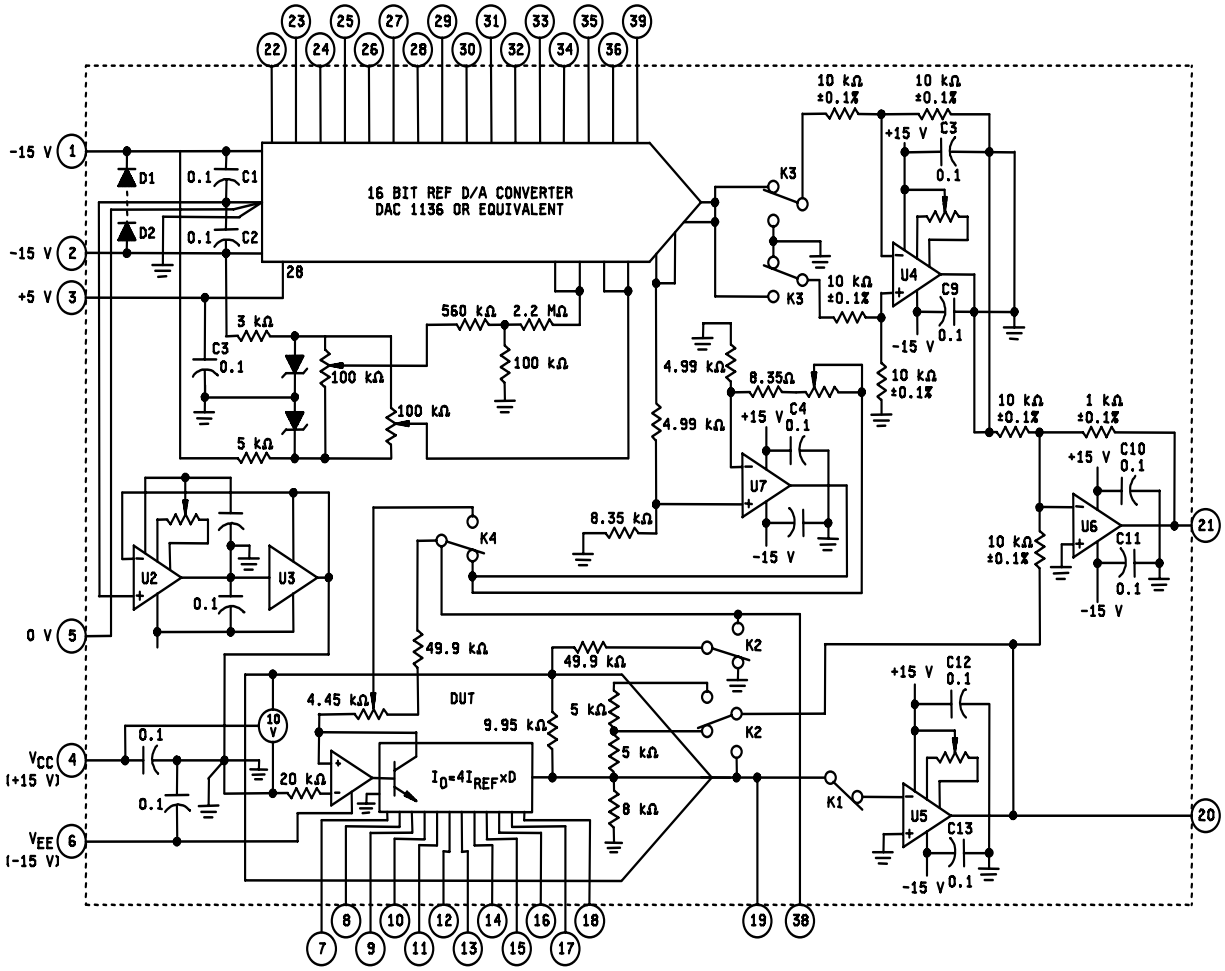

FIGURE 2. Test circuit for static tests - Continued.

Device type 04

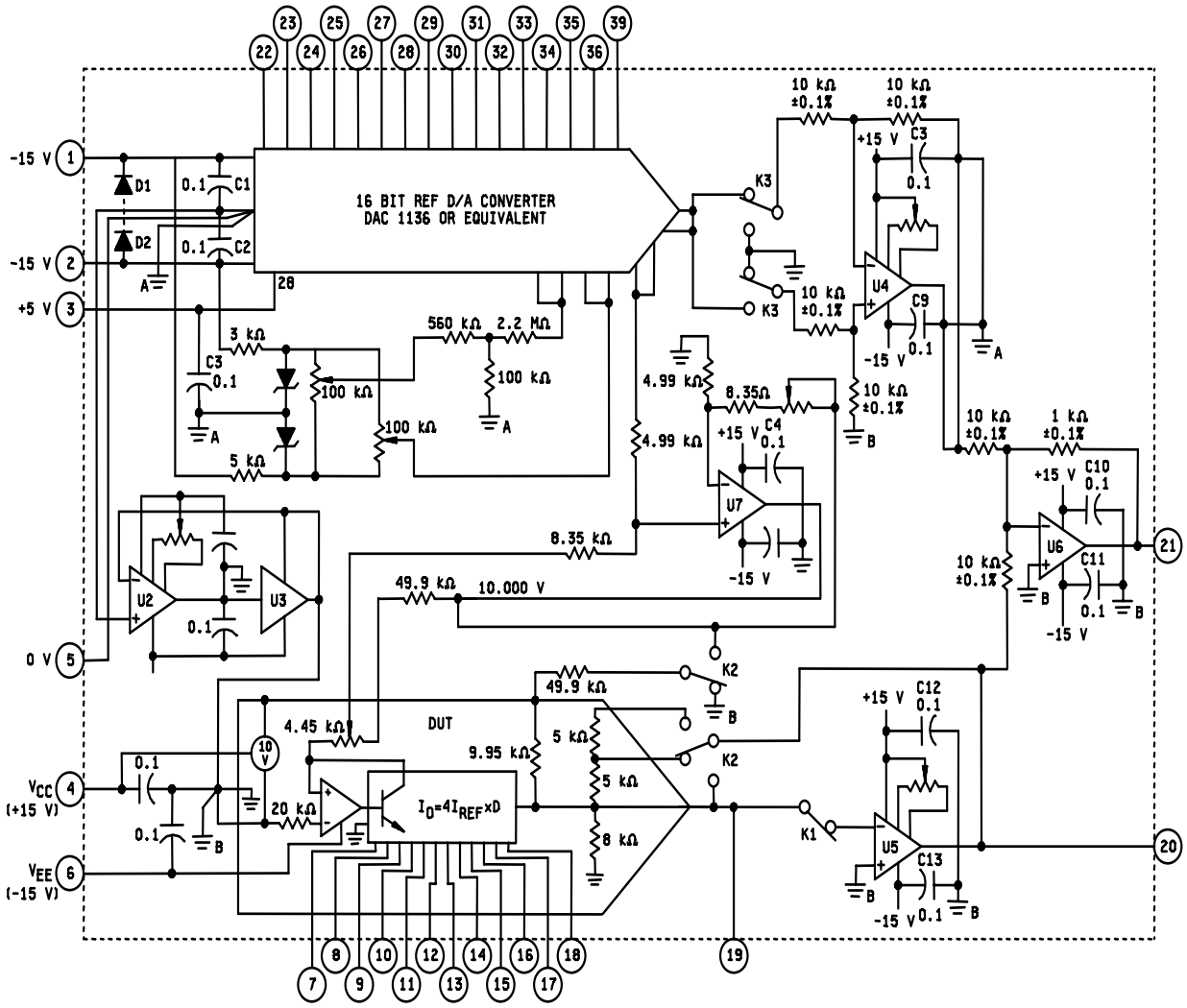

FIGURE 2. Test circuit for static tests - Continued.

Device type 01

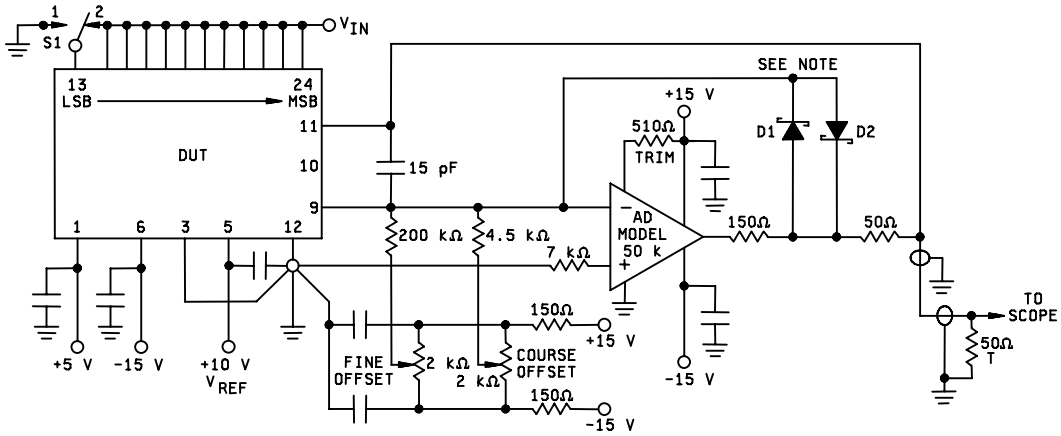

NOTES:

1. Unless otherwise defined, all capacitors are 47 µF tantalum paralleled with 0.1 µF ceramic.
2. Bandwidth of the oscilloscope shall be 50 MHz minimum; saturation of the preamp must be avoided. Use a voltage comparator preamp.
3. Adjust the course and fine offset controls to position the waveform final value on the oscilloscope center horizontal graticule.
4. While operating switch S-1, adjust the oscilloscope vertical gain for ½ LSB per cm.
5. D1 = D2 = HP 5082 – 2835 or EQUIVALENT.

FIGURE 3. Test circuit for settling time.

Device type 02

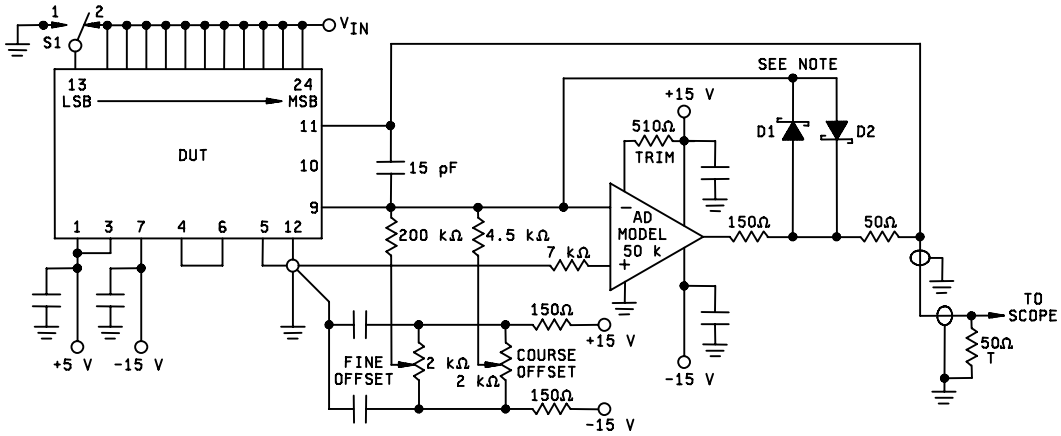

NOTES:

1. Unless otherwise defined, all capacitors are 47 µF tantalum paralleled with 0.1 µF ceramic.
2. Bandwidth of the oscilloscope shall be 50 MHz minimum; saturation of the preamp must be avoided. Use a voltage comparator preamp.
3. Adjust the course and fine offset controls to position the waveform final value on the oscilloscope center horizontal graticule.
4. While operating switch S-1, adjust the oscilloscope vertical gain for ½ LSB per cm.
5. D1 = D2 = HP 5082 – 2835 or EQUIVALENT.

FIGURE 3. Test circuit for settling time – Continued.

Device type 03

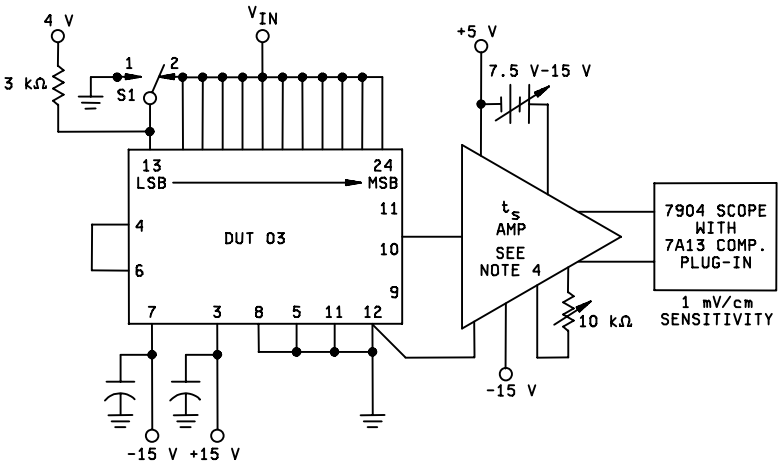

Device type 04

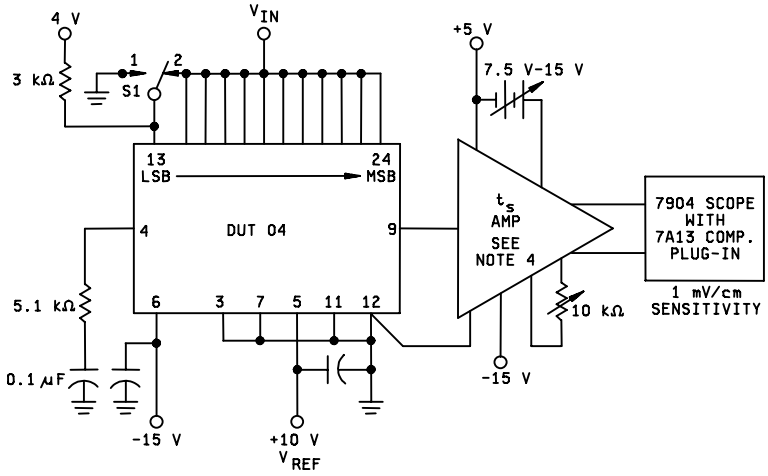

FIGURE 3. Test circuit for settling time – Continued.

NOTES:

1. Unless otherwise specified, all capacitors are 47 µF ceramic.
2. The bandwidth of the oscilloscope main frame must be at least 500 MHz.
3. The plug-in, given a 400 mV to 0 input pulse, must recover to 0.5 mV on the 1 mV/cm gain range within 100 ns.
4. See figure 4 for details of the settling time amplifier. For proper readings, the input FET's (Q1, Q2) and the output FET's (Q4, Q5) must be balanced by the following procedure:
   a. With the DUT removed from the socket, measure the gate voltage of Q1 with a DVM while adjusting the 2 kΩ trim potentiometer for a reading of 0 V.
   b. Connect the (+) and (-) output jacks to a differential comparator scope preamp. Next, zero the scope display with the scope switch on "GND". Short the Schottky diodes out and adjust the 5 kΩ potentiometer so that the differential output display is in the ground reference position, with the scope switch on "DC".
5. Calibrate the scope display by installing a DUT and applying a 4 V, 100 kHz square wave to the logic inputs. With the plug-in controls set to 200 mV/cm and 20 µs/cm, set the variable supply to 12.5 V and adjust the 10 kΩ pot until the amplifier output has its maximum amplitude. It should be a square wave approximately ±200 mV symmetrical about zero volts.

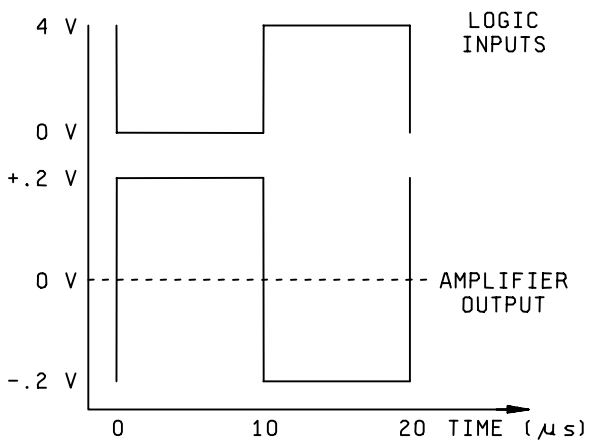

Measurement procedure:

1. Set the variable supply to 15 V and adjust the 10 kΩ pot such that the bottom of the square wave is at zero volts. Note that at 0 V the Schottky diodes are not clamping.

FIGURE 3. Test circuit for settling time – Continued.

5. (Cont):

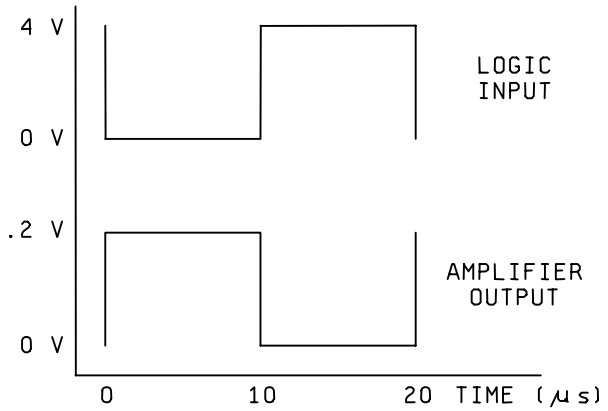

Increase the vertical plug-in gain to 1 mV/cm and the horizontal gain to 1 μs/cm. Toggle S1 to ground and observe the shift in the amplifier output. This is the value of 1 LSB and should be approximately 2.4 mV. With S1 in position 2, observe the amplifier output level at 10 μs. It should be completely settled and unchanged from the 1 μs value. Any significant magnitude variations must be resolved before proceeding to measure DUT settling time. (If a significant change between 1 and 10 μs is noticed, it is probably due to a thermal unbalance in the amplifier fixture rather than a problem with the DUT. To check this, perform a t_{SHL} measurement between 1 and 10 μs. If the change is similar but of opposite polarity, it can be attributed to the fixture and ignored.)

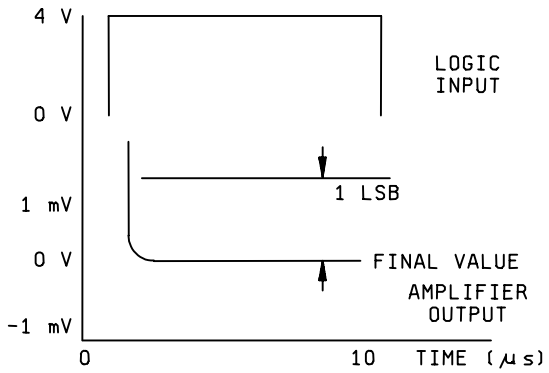

FIGURE 3. Test circuit for settling time – Continued.

6. Measure the settling time by changing the horizontal plug-in to 100 ns/cm and observing when the amplifier output gets within ½ LSB of the 1.0 µs final value.

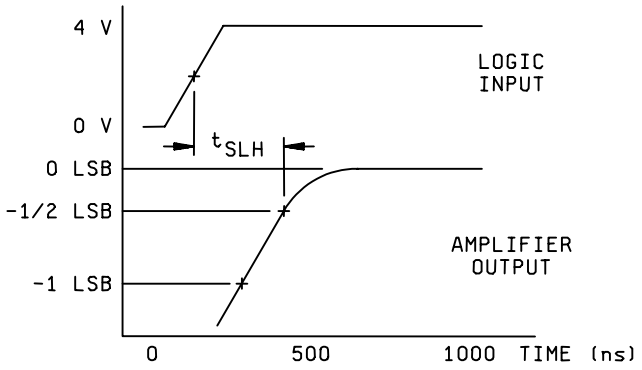

7. Obtain t_{SHL} by adjusting the variable supply to 7.5 V and the 10 kΩ pot to zero the top of the amplifier output square wave and repeating the measurement, with the exception that S1 should be toggled to the 0 position to observe the value of a LSB.

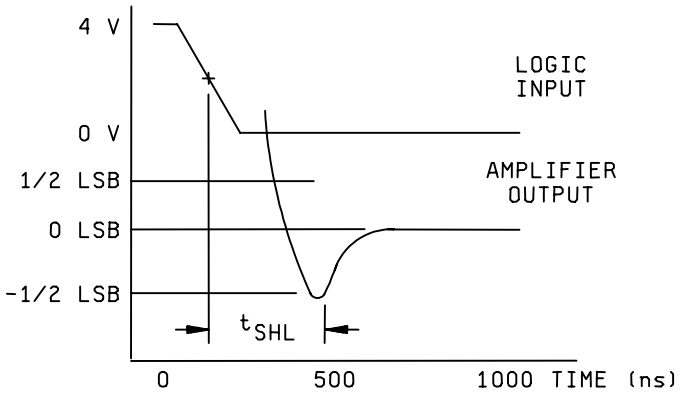

FIGURE 3. Test circuit for settling time – Continued.

Device types 03 and 04

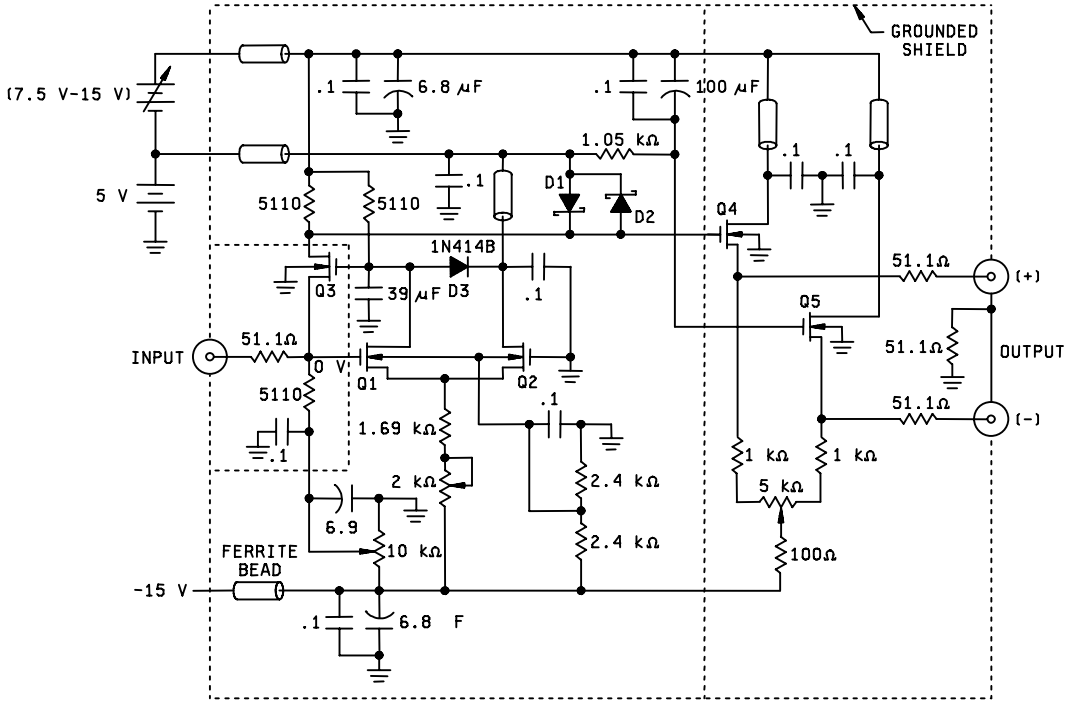

NOTES:

1. Q1 thru Q5 are 5D211 MOS FETS or equivalent.
2. D1 and D2 1N5713 Schottky or equivalent.
3. Use copper clad board for power distribution.
4. Heatsink Q3, Q4, and Q5 to copper clad board. Attach a common to Q1 and Q2 electrically isolated from the PC board.

FIGURE 3. Test circuit for setting time. (amplifier)

Device type 01, 02, 03, and 04

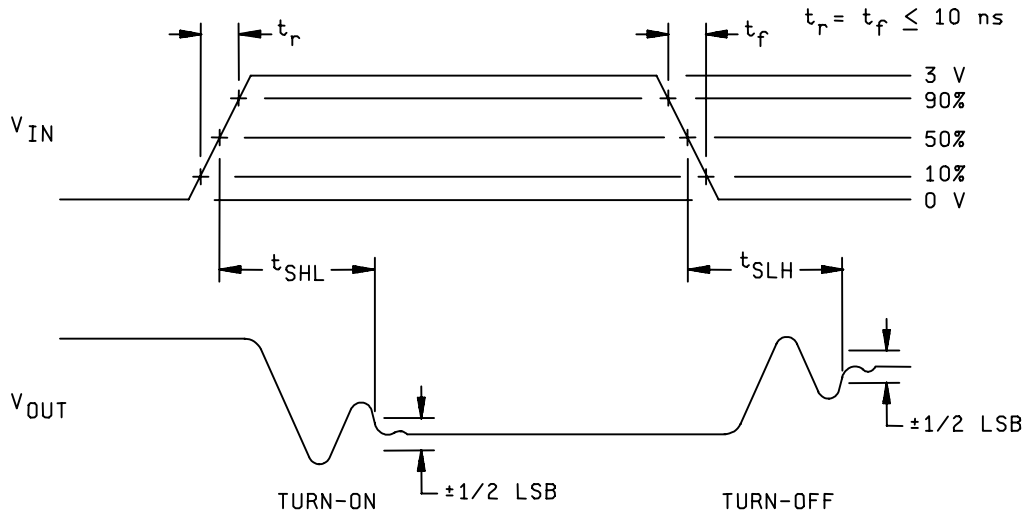

FIGURE 4. Test circuit waveforms for settling time.

Device type 01, 02, 03, and 04

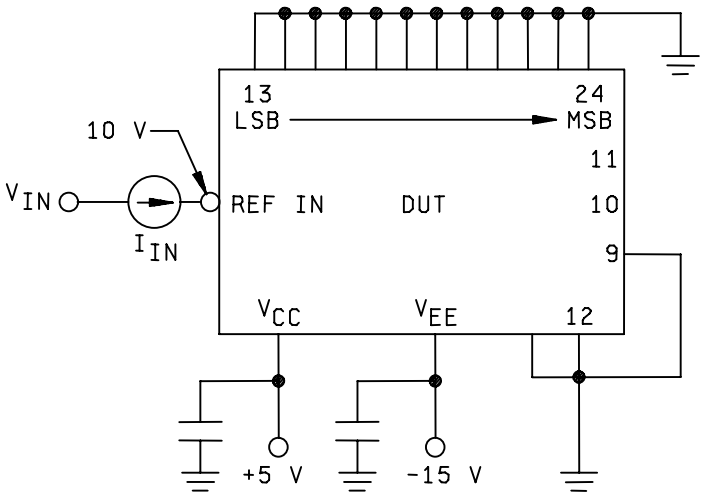

NOTES:

1. All capacitors are 47 µF tantalum paralleled with 0.1 µF ceramic.
2. With 10.0 volts applied to DUT pin 5, measure the input current (I_{IN}).
3. The input resistance is Ri = (-10 V)/(I_{IN} mA) kΩ
4. The following unique pin assignments apply:

Signal	Device type			
	01	02	03	04
Ref I_4	5	6	6	5
Ref GND	3	5	5	3
V_{CC}	1	1	NC	NC
V_{EE}	6	7	7	6

FIGURE 5. Reference input impedance test circuit.

Device types 01 and 04

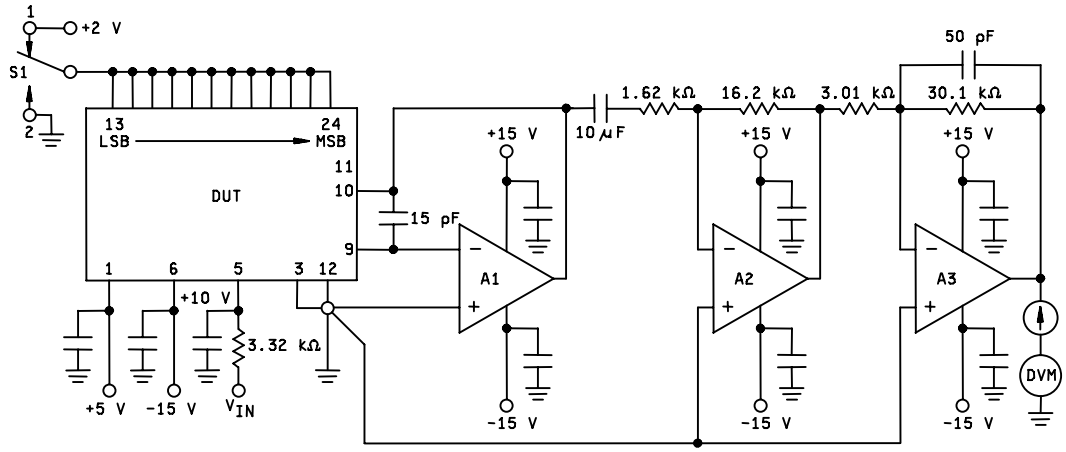

Notes:

1. Unless otherwise stated, all capacitors are 47µF tantalum paralleled with 0.1 µF ceramic.
2. The volts rms meter bandwidth shall be greater than 100 kHz.
3. A_1, A_2, and A_3 shall have a gain bandwidth product greater than 10 MHz and an input noise density less than 10 nV/$\sqrt{\text{Hz}}$.
4. The noise voltage at DUT pins shall be less than 20 µVrms. (N_O for V_{ref})
5. With S-1 in position 2, the measured rms noise voltage shall be less than 10 mVrms. (N_O for all bits off).
6. With S-1 in position 1, the measured rms noise voltage shall be

$$N_O \text{ for DUT} = \sqrt{((N_O)^2 \text{for all bits on} - (N_O)^2 \text{for all bits off} - (N_O)^2 \text{for } V_{ref})/100}$$

7. There is no +5 V connection required for device type 04.

FIGURE 6. Output noise test circuit.

Device types 02 and 03

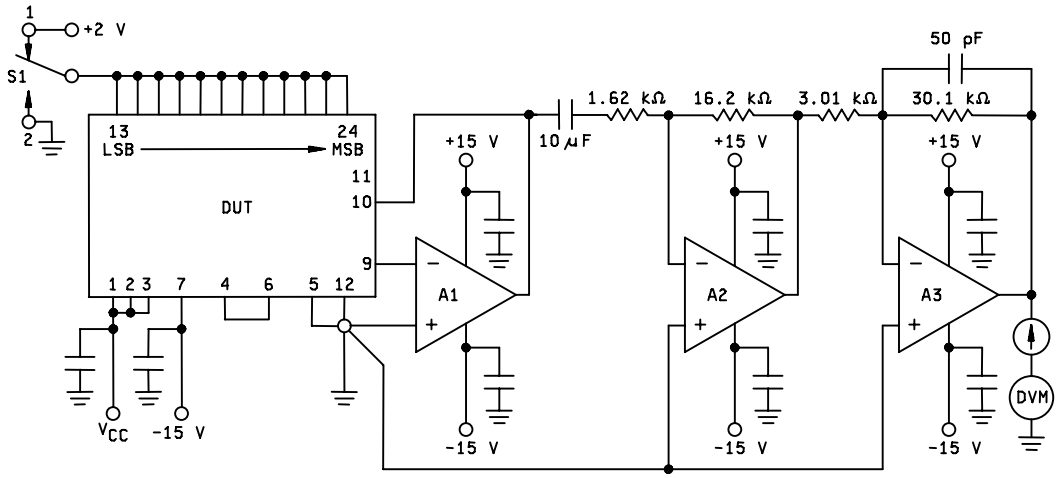

Notes:

1. Unless otherwise stated, all capacitors are 47µF tantalum paralleled with 0.1 µF ceramic.
2. The volts rms meter bandwidth shall be greater than 100 kHz.
3. A_1, A_2, and A_3 shall have a gain bandwidth product greater than 1 MHz and an input noise density less than 10 nV/$\sqrt{\text{Hz}}$.
4. With S-1 in position 2, the measured rms noise voltage shall be less than 1.0 mVrms. (N_O for all bits off).
5. With S-1 in position 1, the measured rms noise voltage shall be

$$N_O \text{ for DUT} = \sqrt{((N_O)^2 \text{for all bits on} - (N_O)^2 \text{for all bits off} - (N_O)^2 \text{for } V_{ref})/100}$$

6. V_{CC} is +5 V for device 02 and +15 V for device 03. Pins 1 and 2 are not connected for device 03..

FIGURE 6. Output noise test circuit – Continued.

TABLE III. Group A inspection for device types 01 and 02.

Subgroup	Symbol	Test no.	Adapter pin numbers 1/				Energized relays	Measured pin			Figure	Equation	Device Types	Limits		Unit
			4	6	7 thru 18	24 thru 35		No.	Value	Unit				Min	Max	
1 T_A = 25°C	I_{CC}	1	15 V	-15 V	1111 1111 1111	1111 1111 1111	K_2, K_3 K_4, K_6	4	I_1	mA	2	$I_{CC} = I_1$	01 02	3 3	18 20	mA “
	I_{EE}	2	“	“	0000 0000 0000	1111 1111 1111	K_2, K_3 K_4, K_6	6	I_2	mA	“	$I_{EE} = I_2$	01, 02	-25	-5	“
	V_{REF}	3	“	“			K_4, K_6	36	V_1	V	“	$V_{REF} = V_1$	02	2.45	2.55	V
	I_{IH1}	4	“	“	1111 1111 1111	1111 1111 1111	K_6	7	I_3	µA	“	$I_{IH1} = I_3$ V_{IN} = 10.50 V	01, 02	-1	100	µA
	I_{IH2}	5	“	“	“	“	“	8	I_4	“	“	$I_{IH2} = I_4$ “	“	“	“	
	I_{IH3}	6	“	“	“	“	“	9	I_5	“	“	$I_{IH3} = I_5$ “	“	“	“	“
	I_{IH4}	7	“	“	“	“	“	10	I_6	“	“	$I_{IH4} = I_6$ “	“	“	“	“
	I_{IH5}	8	“	“	“	“	“	11	I_7	“	“	$I_{IH5} = I_7$ “	“	“	“	“
	I_{IH6}	9	“	“	“	“	“	12	I_8	“	“	$I_{IH6} = I_8$ “	“	“	“	“
	I_{IH7}	10	“	“	“	“	“	13	I_9	“	“	$I_{IH7} = I_9$ “	“	“	“	“
	I_{IH8}	11	“	“	“	“	“	14	I_{10}	“	“	$I_{IH8} = I_{10}$ “	“	“	“	“
	I_{IH9}	12	“	“	“	“	“	15	I_{11}	“	“	$I_{IH9} = I_{11}$ “	“	“	“	“
	I_{IH10}	13	“	“	“	“	“	16	I_{12}	“	“	$I_{IH10} = I_{12}$ “	“	“	“	“
	I_{IH11}	14	“	“	“	“	“	17	I_{13}	“	“	$I_{IH11} = I_{13}$ “	“	“	“	“
	I_{IH12}	15	“	“	“	“	“	18	I_{14}	“	“	$I_{IH12} = I_{14}$ “	“	“	“	“
	I_{IL1}	16	“	“	0000 0000 0000	1111 1111 1111	“	7	I_{15}	“	“	$I_{IL1} = I_{15}$ V_{IN} = 0 V	01, 02	-200	1	“
	I_{IL2}	17	“	“	“	“	“	8	I_{16}	“	“	$I_{IL2} = I_{16}$ “	“	“	“	“
	I_{IL3}	18	“	“	“	“	“	9	I_{17}	“	“	$I_{IL3} = I_{17}$ “	“	“	“	“
	I_{IL4}	19	“	“	“	“	“	10	I_{18}	“	“	$I_{IL4} = I_{18}$ “	“	“	“	“
	I_{IL5}	20	“	“	“	“	“	11	I_{19}	“	“	$I_{IL5} = I_{19}$ “	“	“	“	“
	I_{IL6}	21	“	“	“	“	“	12	I_{20}	“	“	$I_{IL6} = I_{20}$ “	“	“	“	“
	I_{IL7}	22	“	“	“	“	“	13	I_{21}	“	“	$I_{IL7} = I_{21}$ “	“	“	“	“
	I_{IL8}	23	“	“	“	“	“	14	I_{22}	“	“	$I_{IL8} = I_{22}$ “	“	“	“	“
	I_{IL9}	24	“	“	“	“	“	15	I_{23}	“	“	$I_{IL9} = I_{23}$ “	“	“	“	“
	I_{IL10}	25	“	“	“		“	16	I_{24}	“	“	$I_{IL10} = I_{24}$ “	“	“	“	“
	I_{IL11}	26	“	“	“		“	17	I_{25}	“	“	$I_{IL11} = I_{25}$ “	“	“	“	“
	I_{IL12}	27	“	“	“	“	“	18	I_{26}	“	“	$I_{IL12} = I_{26}$ “	“	“	“	“
	I_{FS}	28	5 V	“	1111 1111 1111	1111 1111 1111	“	23	I_{27}	mA	“	$I_{FS} = I_{27}$	“	-2.7	-1.6	mA

See footnotes at end of table.

TABLE III. Group A inspection for device types 01 and 02 – Continued.

Subgroup	Symbol	Test no.	Adapter pin numbers 1/				Energized relays	Measured pin			Figure	Equation	Device Types	Limits		Unit
			4	6	7 thru 18	24 thru 35		No.	Value	Unit				Min	Max	
1 $T_A = 25°C$	$+P_{SS1}$		5 V	-15 V	1111 1111 1111	0000 0000 0000	K_1, K_2	21	V_2	V	2	$+P_{SS1} = \|(V_3 - V_2)/G_1\|$ x 41 for $-\Delta V_{CC}$	01	-0.04	0.04	LSB/%PS
		29	4.5 V	"	1111 1111 1111	0000 0000 0000	"	"	V_3	"	"	(outputs on)	02	-0.15	0.15	"
			4.75 V	"								$+P_{SS1} = \|(V_4 - V_2)/G_1\|$ x 41 for $+\Delta V_{CC}$				
		30	5.5 V	"	1111 1111 1111	0000 0000 0000	"	"	V_4	"	"	(outputs on)				
			5.25 V	"								3/				
			2/													
			5 V	"	0000 0000 0000	1111 1111 1111	"	"	V_5	"	"	$+P_{SS1} = \|(V_6 - V_5)/G_1\|$ x 41 for $-\Delta V_{CC}$	01	-0.04	0.04	"
		31	4.5 V	"	0000 0000 0000	1111 1111 1111	"	"	V_6	"	"	(outputs off)	02	-0.15	0.15	"
			4.75 V	"								$+P_{SS1} = \|(V_7 - V_5)/G_1\|$ x 41 for $+\Delta V_{CC}$				
		32	5.5 V	"	0000 0000 0000	1111 1111 1111	"	"	V_7	"	"	(outputs off)				
			5.25 V	"												
	$+P_{SS2}$		15 V	"	1111 1111 1111	0000 0000 0000	K_1, K_2, K_6	"	V_8	"	"	$+P_{SS2} = \|(V_9 - V_8)/G_1\|$ x 41 for $-\Delta V_{CC}$	01	-0.04	0.04	"
		33	13.5 V	"	1111 1111 1111	0000 0000 0000	"	"	V_9	"	"	(outputs on)	02	-0.15	0.15	"
			14.25 V	"								$+P_{SS2} = \|(V_{10} - V_8)/G_1\|$ x 41 for $+\Delta V_{CC}$				
		34	16.5 V	"	1111 1111 1111	0000 0000 0000	"	"	V_{10}	"	"	(outputs on)				
			15.75 V	"												
			2/													
			15 V	"	0000 0000 0000	1111 1111 1111	"	"	V_{11}	"	"	$+P_{SS2} = \|(V_{12} - V_{11})/G_1\|$ x 41 for $-\Delta V_{CC}$	01	-0.04	0.04	"
		35	13.5 V	"	0000 0000 0000	1111 1111 1111	"	"	V_{12}	"	"	(outputs off)	02	-0.15	0.15	"
			14.25 V	"								$+P_{SS2} = \|(V_{13} - V_{11})/G_1\|$ x 41 for $+\Delta V_{CC}$				
		36	16.5 V	"	0000 0000 0000	1111 1111 1111	"	"	V_{13}	"	"	(outputs off)				
			15.75 V	"												
	$-P_{SS}$		5 V	-15 V	1111 1111 1111	0000 0000 0000	K_1, K_2	"	V_{14}	"	"	$-P_{SS} = \|(V_{15} - V_{14})/G_1\|$ x 41 for $-\Delta V_{CC}$	01	-0.07	0.07	"
		37	"	-13.5 V	1111 1111 1111	0000 0000 0000	"	"	V_{15}	"	"	(outputs on)	02	-0.25	0.25	"
			"	-14.25 V								$-P_{SS} = \|(V_{16} - V_{14})/G_1\|$ x 41 for $+\Delta V_{CC}$				
		38	"	-16.5 V	1111 1111 1111	0000 0000 0000	"	"	V_{16}	"	"	(outputs on)				
			"	-15.75 V												
			"	2/												
			"	-15 V	0000 0000 0000	1111 1111 1111	"	"	V_{17}	"	"	$-P_{SS} = \|(V_{18} - V_{17})/G_1\|$ x 41 for $-\Delta V_{CC}$	01	-0.07	0.07	"
		39	"	-13.5 V	0000 0000 0000	1111 1111 1111	"	"	V_{18}	"	"	(outputs off)	02	-0.25	0.25	"
			"	-14.25 V								$-P_{SS} = \|(V_{19} - V_{17})/G_1\|$ x 41 for $+\Delta V_{CC}$				
		40	"	-16.5 V	0000 0000 0000	1111 1111 1111	"	"	V_{19}	"	"	(outputs off)				
			"	-15.75 V												
2 $T_A = 125°C$	V_{REF}	41	15 V	-15 V			K_4, K_6	36	V_{20}	V	"	$V_{REF} = V_{20}$	02	2.45	2.55	V
	I_{ZS1}	42	5 V	"	0000 0000 0000	1111 1111 1111	K_6	23	I_{28}	µA	"	$I_{ZS} = (I_{28})\ (4095)/(I_{27} - I_{28})$	01,02	-3	3	LSB
	I_{ZS2}	43	15 V	"	0000 0000 0000	1111 1111 1111	"	23	I_{29}	µA	"	$I_{ZS} = (I_{29})\ (4095)/(I_{27} - I_{29})$	01,02	-3	3	LSB
	AE_1	44	5 V	"	0000 0000 0000	1111 1111 1111	K_1, K_2	21	V_{21}	V	"	$G_{IH} = (V_{22} - V_{21})/\ 10/(4096)\ (14)$	01	-0.25	0.25	%
			"	"	0000 0000 0000	1111 1111 0001	"	"	V_{22}	"	"	$A_{E1} = (V_{23} - V_{24})/G_{IH}$ x 10	02	-0.46	0.46	
			"	"	1111 1111 1111	0000 0000 0000	"	"	V_{23}	"	"					
	B_{POE}	45	15 V	"	0000 0000 0000	1111 1111 1111	K_2, K_7	"	V_{24}	"	"	$G_{2H} = (V_{25} - V_{24})/\ 20/(4096)\ (14)$	01	-10.0	10.0	LSB
			"	"	0000 0000 0000	1111 1111 0001	"	"	V_{25}	"	"	$B_{POE} = 205$ x (V_{26}/G_{2H})	02	-18.5	18.5	
			"	"	0000 0000 0000	1111 1111 1111	"	"	V_{26}	"	"					
	B_{ZE}	46	"	"	1000 0000 0000	0111 1111 1111	K_2, K_3	"	V_{27}	"	"	$B_{ZE} = 205$ x (V_{27}/G_{2H})	01	-8.5	8.5	LSB
													02	-10.5	10.5	

See footnotes at end of table.

TABLE III. Group A inspection for device types 01 and 02 – Continued.

Subgroup	Symbol	Test no.	Adapter pin numbers 1/				Energized relays	Measured pin			Figure	Equation	Device Types	Limits		Unit
			4	6	7 thru 18	24 thru 35		No.	Value	Unit				Min	Max	
2 T_A = 125°C			5 V	-15 V	1111 1111 1111	0000 0000 0000	K_1, K_2	21	V_{28}	V	2	For each input code N, calculate the corresponding linearity error in LSB.	01, 02	-0.5	0.5	LSB
			"	"	0000 0000 0000	1111 1111 1111	"	"	V_{29}	"	"		"	"	"	"
	LE_1	47	"	"	0000 0000 0001	1111 1111 1110	"	"	V_{30}	"	"		"	"	"	"
		48	"	"	0000 0000 0010	1111 1111 1101	"	"	V_{31}	"	"		"	"	"	"
		49	"	"	0000 0000 0100	1111 1111 1011	"	"	V_{32}	"	"	$LE = 410/G_{1H}(V_A–((V_{28}-V_{29})/4095) N- V_{29})$	"	"	"	"
		50	"	"	0000 0000 1000	1111 1111 0111	"	"	V_{33}	"	"	Where V_A = measured value from V_{30}	"	"	"	"
		51	"	"	0000 0001 0000	1111 1110 1111	"	"	V_{34}	"	"	through V_{52}	"	"	"	"
		52	"	"	0000 0010 0000	1111 1101 1111	"	"	V_{35}	"	"	N = bit number (decimal)	"	"	"	"
		53	"	"	0000 0100 0000	1111 1011 1111	"	"	V_{36}	"	"	$V_{30} \le V_A \le V_{52}$	"	"	"	"
	LE_8	54	"	"	0000 1000 0000	1111 0111 1111	"	"	V_{37}	"	"		"	"	"	"
					A. Record, (0000 BBBB BBBB), the sum of the code-words from tests 47 – 54 with positive linearity errors. B. Record, (0000 CCCC CCCC), the sum of the code-words from tests 47 – 54 with negative linearity errors.											
	LE_9	55	5 V	-15 V	0001 0000 0000	1110 1111 1111	K_1, K_2	21	V_{38}	V	2		01, 02	-0.5	0.5	LSB
		56	"	"	0010 0000 0000	1101 1111 1111	"	"	V_{39}	"	"		"	"	"	"
		57	"	"	0011 0000 0000	1100 1111 1111	"	"	V_{40}	"	"		"	"	"	"
		58	"	"	0100 0000 0000	1011 1111 1111	"	"	V_{41}	"	"		"	"	"	"
		59	"	"	0101 0000 0000	1010 1111 1111	"	"	V_{42}	"	"		"	"	"	"
		60	"	"	0110 0000 0000	1001 1111 1111	"	"	V_{43}	"	"		"	"	"	"
		61	"	"	0111 0000 0000	1000 1111 1111	"	"	V_{44}	"	"	|	"	"	"	"
		62	"	"	1000 0000 0000	0111 1111 1111	"	"	V_{45}	"	"	$S = ((V_{28}-V_{29})/4095)$	"	"	"	"
		63	"	"	1001 0000 0000	0110 1111 1111	"	"	V_{46}	"	"	|	"	"	"	"
		64	"	"	1010 0000 0000	0101 1111 1111	"	"	V_{47}	"	"		"	"	"	"
		65	"	"	1011 0000 0000	0100 1111 1111	"	"	V_{48}	"	"		"	"	"	"
		66	"	"	1100 0000 0000	0011 1111 1111	"	"	V_{49}	"	"		"	"	"	"
		67	"	"	1101 0000 0000	0010 1111 1111	"	"	V_{50}	"	"		"	"	"	"
		68	"	"	1110 0000 0000	0001 1111 1111	"	"	V_{51}	"	"		"	"	"	"
	LE_{23}	69	"	"	1111 0000 0000	0000 1111 1111	"	"	V_{52}	"	"		"	"	"	"
					A. Record the DUT code-word, (XXXX 0000 0000), with the most positive error. B. Record the DUT code-word, (YYYY 0000 0000), with the most negative error.											
					Determine the sum of the recorded code-words obtained from tests 47 – 54 and from tests 55 – 69 for positive errors. Measure and calculate linearity error for the new DUT code-word (XXXX BBBB BBBB). (See Table I, note 9/).											
	LE_{24}	70	5 V	-15 V	XXXX BBBB BBBB XXXX BBBB BBBB 1111		K_1, K_2	21	V_{53}	V	2	$LE_{24} = 410/G_{1H}(V_{53}-((\text{on-bits}) xS) – V_{28})$	01, 02	-0.5	0.5	LSB
					Determine the sum of the recorded code-words obtained from tests 47 – 54 and from tests 55 – 69 for negative errors. Measure and calculate linearity error for the new DUT code-word (YYYY CCCC CCCC). (See Table I, note 9/).											
	LE_{25}	71	5 V	-15 V	YYYY CCCC CCCC YYYY CCCC CCCC 1111		K_1, K_2	21	V_{54}	V	2	$LE_{25} = 410/G_{1H}(V_{54}-((\text{on-bits}) xS) – V_{28})$	01, 02	-0.5	0.5	LSB

See footnotes at end of table.

TABLE III. Group A inspection for device types 01 and 02 – Continued.

Subgroup	Symbol	Test no.	Adapter pin numbers 1/				Energized relays	Measured pin			Figure	Equation	Device Types	Limits		Unit
			4	6	7 thru 18	24 thru 35		No.	Value	Unit				Min	Max	
2 T_A = 125°C	MCE	72	5 V	-15 V	0111 1111 1111	1000 0000 0000	K_1, K_2	21	V_{55}	V	2	For each set of major carry codes N and N + 1, calculate the associated error in LSB's as follows: MCE = 410((V_m(N) – V_m(N-1))/G_{1H} – 10/4096) Where V_m = measured value V_{55} through V_{78} " N = N + 1" are the decimal equivalents of the code words in column "7 thru 18" Example: For the first set N = 1000 0000 0000 = 2^{11} = 2048 N – 1 = 0111 1111 1111 = 2^{11} - 1 = 2047 and V_m(N) = V_{56} V_m(N-1) = V_{55}	01, 02	-1.0	1.0	LSB
			"	"	1000 0000 0000	0111 1111 1111	"	"	V_{56}	"	"		"	"	"	"
		73	"	"	0011 1111 1111	1100 0000 0000	"	"	V_{57}	"	"		"	"	"	"
			"	"	0100 0000 0000	1011 1111 1111	"	"	V_{58}	"	"		"	"	"	"
		74	"	"	0001 1111 1111	1110 0000 0000	"	"	V_{59}	"	"		"	"	"	"
			"	"	0010 0000 0000	1101 1111 1111	"	"	V_{60}	"	"		"	"	"	"
		75	"	"	0000 1111 1111	1111 0000 0000	"	"	V_{61}	"	"		"	"	"	"
			"	"	0001 0000 0000	1110 1111 1111	"	"	V_{62}	"	"		"	"	"	"
		76	"	"	0000 0111 1111	1111 1000 0000	"	"	V_{63}	"	"		"	"	"	"
			"	"	0000 1000 0000	1111 0111 1111	"	"	V_{64}	"	"		"	"	"	"
		77	"	"	0000 0011 1111	1111 1100 0000	"	"	V_{65}	"	"		"	"	"	"
			"	"	0000 0100 0000	1111 1011 1111	"	"	V_{66}	"	"		"	"	"	"
		78	"	"	0000 0001 1111	1111 1110 0000	"	"	V_{67}	"	"		"	"	"	"
			"	"	0000 0010 0000	1111 1101 1111	"	"	V_{68}	"	"		"	"	"	"
		79	"	"	0000 0000 1111	1111 1111 0000	"	"	V_{69}	"	"		"	"	"	"
			"	"	0000 0001 0000	1111 1110 1111	"	"	V_{70}	"	"		"	"	"	"
		80	"	"	0000 0000 0111	1111 1111 1000	"	"	V_{71}	"	"		"	"	"	"
			"	"	0000 0000 1000	1111 1111 0111	"	"	V_{72}	"	"		"	"	"	"
		81	"	"	0000 0000 0011	1111 1111 1100	"	"	V_{73}	"	"		"	"	"	"
			"	"	0000 0000 0100	1111 1111 1011	"	"	V_{74}	"	"		"	"	"	"
		82	"	"	0000 0000 0001	1111 1111 1110	"	"	V_{75}	"	"		"	"	"	"
			"	"	0000 0000 0010	1111 1111 1101	"	"	V_{76}	"	"		"	"	"	"
		83	"	"	0000 0000 0000	1111 1111 1111	"	"	V_{77}	"	"		"	"	"	"
			"	"	0000 0000 0001	1111 1111 1110	"	"	V_{78}	"	"		"	"	"	"
3 T_A = -55°C	V_{REF}	84	15 V	"			K_4, K_6	36	V_{79}	"	"	V_{REF} = V_{79}	02	2.45	2.55	V
	I_{ZS1}	85	5 V	"	0000 0000 0000	1111 1111 1111	K_6	23	I_{30}	µA	"	I_{ZS} = (I_{30}) (4095)/(I_{27}-I_{30})	01, 02	-3	3	LSB
	I_{ZS2}	86	15 V	"	0000 0000 0000	1111 1111 1111	"	23	I_{31}	µA	"	I_{ZS} = (I_{31}) (4095)/(I_{27}-I_{31})	01, 02	-3	3	LSB
	A_{E1}	87	5 V	"	0000 0000 0000	1111 1111 1111	K_1, K_2	21	V_{80}	V	"	G_{IL} = (V_{81} – V_{80})/(10/4096)(14) A_{E1} = ((V_{82} – V_{80})/G_{1L}) x 10	01	-0.24	0.24	%
			"	"	0000 0000 0000	1111 1111 0001	"	"	V_{81}	"	"		02	-0.4	0.4	
			"	"	1111 1111 1111	0000 0000 0000	"	"	V_{82}	"	"					
	B_{POE}	88	15 V	"	0000 0000 0000	1111 1111 1111	K_2, K_7	"	V_{83}	"	"	G_{2L} = (V_{84} – V_{83})/(20/4096)(14) B_{POE} = 205((V_{85}/G_{2L})) x 10	01	-9.6	9.6	LSB
			"	"	0000 0000 0000	1111 1111 0001	K_2, K_7	"	V_{84}	"	"		02	-16.1	16.1	
			"	"	0000 0000 0000	1111 1111 1111	K_2, K_3	"	V_{85}	"	"					
	B_{ZE}	89	"	"	1000 0000 0000	0111 1111 1111	K_2, K_3	"	V_{86}	"	"	B_{ZE} = 205(V_{86}/G_{2L})	01 02	-8.1 -9.7	8.1 9.7	LSB

See footnotes at end of table.

TABLE III. Group A inspection for device types 01 and 02 – Continued.

Subgroup	Symbol	Test no.	Adapter pin numbers 1/				Energized relays	Measured pin			Figure	Equation	Device Types	Limits		Unit
			4	6	7 thru 18	24 thru 35		No.	Value	Unit				Min	Max	
3 T_A = -55°C			5 V	-15 V	1111 1111 1111	0000 0000 0000	K_1, K_2	21	V_{87}	V	2	For each input code N, calculate the corresponding linearity error in LSB.	01, 02	-0.5	0.5	LSB
			"	"	0000 0000 0000	1111 1111 1111	"	"	V_{88}	"	"		"	"	"	"
	LE_1	90	"	"	0000 0000 0001	1111 1111 1110	"	"	V_{89}	"	"		"	"	"	"
		91	"	"	0000 0000 0010	1111 1111 1101	"	"	V_{90}	"	"		"	"	"	"
		92	"	"	0000 0000 0100	1111 1111 1011	"	"	V_{91}	"	"	LE = $410/G_{1L}(V_A-((V_{87}-V_{88})/4095)$ N- $V_{88})$	"	"	"	"
		93	"	"	0000 0000 1000	1111 1111 0111	"	"	V_{92}	"	"	Where V_A = measured value from V_{89}	"	"	"	"
		94	"	"	0000 0001 0000	1111 1110 1111	"	"	V_{93}	"	"	through V_{111}	"	"	"	"
		95	"	"	0000 0010 0000	1111 1101 1111	"	"	V_{94}	"	"	N = bit number (decimal)	"	"	"	"
		96	"	"	0000 0100 0000	1111 1011 1111	"	"	V_{95}	"	"	$V_{89} \le V_A \le V_{111}$	"	"	"	"
	LE_8	97	"	"	0000 1000 0000	1111 0111 1111	"	"	V_{96}	"	"		"	"	"	"
					A. Record, (0000 BBBB BBBB), the sum of the code-words from tests 90 – 97 with positive linearity errors. B. Record, (0000 CCCC CCCC), the sum of the code-words from tests 90 – 97 with negative linearity errors.											
	LE_9	98	5 V	-15 V	0001 0000 0000	1110 1111 1111	K_1, K_2	21	V_{97}	V	2		01, 02	-0.5	0.5	LSB
		99	"	"	0010 0000 0000	1101 1111 1111	"	"	V_{98}	"	"		"	"	"	"
		100	"	"	0011 0000 0000	1100 1111 1111	"	"	V_{99}	"	"		"	"	"	"
		101	"	"	0100 0000 0000	1011 1111 1111	"	"	V_{100}	"	"		"	"	"	"
		102	"	"	0101 0000 0000	1010 1111 1111	"	"	V_{101}	"	"		"	"	"	"
		103	"	"	0110 0000 0000	1001 1111 1111	"	"	V_{102}	"	"		"	"	"	"
		104	"	"	0111 0000 0000	1000 1111 1111	"	"	V_{103}	"	"	|	"	"	"	"
		105	"	"	1000 0000 0000	0111 1111 1111	"	"	V_{104}	"	"	S = $((V_{87}-V_{88})/4095)$	"	"	"	"
		106	"	"	1001 0000 0000	0110 1111 1111	"	"	V_{105}	"	"	|	"	"	"	"
		107	"	"	1010 0000 0000	0101 1111 1111	"	"	V_{106}	"	"		"	"	"	"
		108	"	"	1011 0000 0000	0100 1111 1111	"	"	V_{107}	"	"		"	"	"	"
		109	"	"	1100 0000 0000	0011 1111 1111	"	"	V_{108}	"	"		"	"	"	"
		110	"	"	1101 0000 0000	0010 1111 1111	"	"	V_{109}	"	"		"	"	"	"
		111	"	"	1110 0000 0000	0001 1111 1111	"	"	V_{110}	"	"		"	"	"	"
	LE_{23}	112	"	"	1111 0000 0000	0000 1111 1111	"	"	V_{111}	"	"		"	"	"	"
					A. Record the DUT code-word, (XXXX 0000 0000), with the most positive error. B. Record the DUT code-word, (YYYY 0000 0000), with the most negative error.											
	LE_{24}	113	5 V	-15 V	Determine the sum of the recorded code-words obtained from tests 90 – 97 and from tests 98 – 112 for positive errors. Measure and calculate linearity error for the new DUT code-word (XXXX BBBB BBBB). (See Table I, note 9/). XXXX BBBB BBBB XXXX BBBB BBBB 1111		K_1, K_2	21	V_{112}	V	2	$LE_{24} = 410/G_{1L}(V_{112}-((\text{on-bits}) \times S) - V_{87})$	01, 02	-0.5	0.5	LSB
	LE_{25}	114	5 V	-15 V	Determine the sum of the recorded code-words obtained from tests 90 – 97 and from tests 98 – 112 for negative errors. Measure and calculate linearity error for the new DUT code-word (YYYY CCCC CCCC). (See Table I, note 9/). YYYY CCCC CCCC YYYY CCCC CCCC 1111		K_1, K_2	21	V_{113}	V	2	$LE_{25} = 410/G_{1L}(V_{113}-((\text{on-bits}) \times S) - V_{87})$	01, 02	-0.5	0.5	LSB

See footnotes at end of table.

TABLE III. Group A inspection for device types 01 and 02 – Continued.

Subgroup	Symbol	Test no.	Adapter pin numbers 1/				Energized relays	Measured pin			Figure	Equation	Device Types	Limits		Unit
			4	6	7 thru 18	24 thru 35		No.	Value	Unit				Min	Max	
3	MC1	115	5 V	-15 V	0111 1111 1111	1000 0000 0000	K_1, K_2	21	V_{114}	V	2	For each set of major carry codes N and	01, 02	-1.0	1.0	LSB
T_A = -55°C			"	"	1000 0000 0000	0111 1111 1111	"	"	V_{115}	"	"	N + 1, calculate the associated error in	"	"	"	"
	MC2	116	"	"	0011 1111 1111	1100 0000 0000	"	"	V_{116}	"	"	LSB's as follows:	"	"	"	"
			"	"	0100 0000 0000	1011 1111 1111	"	"	V_{117}	"	"		"	"	"	"
	MC3	117	"	"	0001 1111 1111	1110 0000 0000	"	"	V_{118}	"	"	MCE = 410((V_m(N) – V_m(N-1))/G_{1L} – 10/4096)	"	"	"	"
			"	"	0010 0000 0000	1101 1111 1111	"	"	V_{119}	"	"		"	"	"	"
	MC4	118	"	"	0000 1111 1111	1111 0000 0000	"	"	V_{120}	"	"	V_m = measured value V_{114} through V_{137}	"	"	"	"
			"	"	0001 0000 0000	1110 1111 1111	"	"	V_{121}	"	"	N and N – 1 are the decimal equivalents of	"	"	"	"
	MC5	119	"	"	0000 0111 1111	1111 1000 0000	"	"	V_{122}	"	"	the code words in column 7 - 18	"	"	"	"
			"	"	0000 1000 0000	1111 0111 1111	"	"	V_{123}	"	"		"	"	"	"
	MC6	120	"	"	0000 0011 1111	1111 1100 0000	"	"	V_{124}	"	"	Example:	"	"	"	"
			"	"	0000 0100 0000	1111 1011 1111	"	"	V_{125}	"	"	N = 1000 0000 0000 = 2^{12} = 2048	"	"	"	"
	MC7	121	"	"	0000 0001 1111	1111 1110 0000	"	"	V_{126}	"	"	N – 1 = 0111 1111 1111 = 2^{12}- 1 = 2047	"	"	"	"
			"	"	0000 0010 0000	1111 1101 1111	"	"	V_{127}	"	"	and V_m(N) = V_{115}	"	"	"	"
	MC8	122	"	"	0000 0000 1111	1111 1111 0000	"	"	V_{128}	"	"	V_m(N-1) = V_{114}	"	"	"	"
			"	"	0000 0001 0000	1111 1110 1111	"	"	V_{129}	"	"		"	"	"	"
	MC9	123	"	"	0000 0000 0111	1111 1111 1000	"	"	V_{130}	"	"		"	"	"	"
			"	"	0000 0000 1000	1111 1111 0111	"	"	V_{131}	"	"		"	"	"	"
	MC10	124	"	"	0000 0000 0011	1111 1111 1100	"	"	V_{132}	"	"		"	"	"	"
			"	"	0000 0000 0100	1111 1111 1011	"	"	V_{133}	"	"		"	"	"	"
	MC11	125	"	"	0000 0000 0001	1111 1111 1110	"	"	V_{134}	"	"		"	"	"	"
			"	"	0000 0000 0010	1111 1111 1101	"	"	V_{135}	"	"		"	"	"	"
	MC12	126	"	"	0000 0000 0000	1111 1111 1111	"	"	V_{136}	"	"		"	"	"	"
			"	"	0000 0000 0001	1111 1111 1110	"	"	V_{137}	"	"		"	"	"	"
4	B_{PAE}	127	"	"	0000 0000 0000	1111 1111 1111	K_2, K_7	"	V_{138}	"	"	G2 = (V_{139} – V_{138})/(20/4096)(15)	01	-0.20	0.20	%
T_A = 25°C			"	"	0000 0000 0000	1111 1111 0001	K_2, K_7	"	V_{139}	"	"		02	-0.16	0.16	
			"	"	0000 0000 0000	1111 1111 1111	K_2, K_3	"	V_{140}	"	"	BPAE = 5(V_{141} – V_{140})/G_2				
			"	"	1111 1111 1111	0000 0000 0000	K_2, K_3	"	V_{141}	"	"					
	B_{POE}	128	"	"	0000 0000 0000	1111 1111 1111	"	"	V_{142}	"	"	B_{POE} = 205 x V_{142}/G_2	01	-8	8	LSB
													02	-6.5	6.5	"
	B_{ZE}	129	"	"	1000 0000 0000	0111 1111 1111	"	"	V_{143}	"	"	B_{ZE} = 205 x V_{143}/G_2	01, 02	-6.5	6.5	"
	I_{ZS1}	130	"	"	0000 0000 0000	1111 1111 1111	K_6	23	I_{32}	µA	"	I_{ZS} = (I_{32}) (4095)/(I_{27}-I_{32})	01, 02	-2	2	"
	I_{ZS2}	131	15 V	"	0000 0000 0000	1111 1111 1111	"	23	I_{33}	µA	"	I_{ZS} = (I_{33}) (4095)/(I_{27}-I_{33})	01, 02	-2	2	"
	A_{E1}	132	5 V	"	0000 0000 0000	1111 1111 1111	K_1, K_2	21	V_{144}	V	"	G_I = (V_{145} – V_{144})/(10/4096)(14)	01	-0.20	0.20	%
				"	0000 0000 0000	1111 1111 0001	"	"	V_{145}	"	"	A_{E1} = 10 (V_{146} – V_{144})/G1	02	-0.16	0.16	"
				"	1111 1111 1111	0000 0000 0000	"	"	V_{146}	"	"					
	A_{E2}	133	15 V	"	0000 0000 0000	1111 1111 1111	K_1,K_2,K_6	"	V_{147}	"	"	A_{E2} = 10 (V_{148} – V_{147})/G1	01	-0.20	0.20	"
				"	1111 1111 1111	0000 0000 0000	"	"	V_{148}	"	"		02	-0.16	0.16	"

See footnotes at end of table.

TABLE III. Group A inspection for device types 01 and 02 – Continued.

Subgroup	Symbol	Test no.	Adapter pin numbers 1/				Energized relays	Measured pin			Figure	Equation	Device Types	Limits		Unit
			4	6	7 thru 18	24 thru 35		No.	Value	Unit				Min	Max	
4 T_A = 25°C			5 V	-15 V	1111 1111 1111	0000 0000 0000	K_1, K_2	21	V_{149}	V	2	For each input code N, calculate the corresponding linearity error in LSB.	01, 02	-0.5	0.5	LSB
			"	"	0000 0000 0000	1111 1111 1111	"	"	V_{150}	"	"		"	"	"	"
	LE_1	134	"	"	0000 0000 0001	1111 1111 1110	"	"	V_{151}	"	"		"	"	"	"
		135	"	"	0000 0000 0010	1111 1111 1101	"	"	V_{152}	"	"		"	"	"	"
		136	"	"	0000 0000 0100	1111 1111 1011	"	"	V_{153}	"	"	LE = 410/G_{1L}(V_A–((V_{149}-V_{150})/4095) N- V_{149})	"	"	"	"
		137	"	"	0000 0000 1000	1111 1111 0111	"	"	V_{154}	"	"	Where V_A = measured value from V_{151}	"	"	"	"
		138	"	"	0000 0001 0000	1111 1110 1111	"	"	V_{155}	"	"	through V_{173}	"	"	"	"
		139	"	"	0000 0010 0000	1111 1101 1111	"	"	V_{156}	"	"	N = bit number (decimal)	"	"	"	"
		140	"	"	0000 0100 0000	1111 1011 1111	"	"	V_{157}	"	"	$V_{149} \le V_A \le V_{173}$	"	"	"	"
	LE_8	141	"	"	0000 1000 0000	1111 0111 1111	"	"	V_{158}	"	"		"	"	"	"
					A. Record, (0000 BBBB BBBB), the sum of the code-words from tests 134 – 141 with positive linearity errors. B. Record, (0000 CCCC CCCC), the sum of the code-words from tests 134 – 141 with negative linearity errors.											
	LE_9	142	5 V	-15 V	0001 0000 0000	1110 1111 1111	K_1, K_2	21	V_{159}	V	2		01, 02	-0.5	0.5	LSB
		143	"	"	0010 0000 0000	1101 1111 1111	"	"	V_{160}	"	"		"	"	"	"
		144	"	"	0011 0000 0000	1100 1111 1111	"	"	V_{161}	"	"		"	"	"	"
		145	"	"	0100 0000 0000	1011 1111 1111	"	"	V_{162}	"	"		"	"	"	"
		146	"	"	0101 0000 0000	1010 1111 1111	"	"	V_{163}	"	"		"	"	"	"
		147	"	"	0110 0000 0000	1001 1111 1111	"	"	V_{164}	"	"		"	"	"	"
		148	"	"	0111 0000 0000	1000 1111 1111	"	"	V_{165}	"	"	|	"	"	"	"
		149	"	"	1000 0000 0000	0111 1111 1111	"	"	V_{166}	"	"	S = ((V_{149}-V_{150})/4095)	"	"	"	"
		150	"	"	1001 0000 0000	0110 1111 1111	"	"	V_{167}	"	"	|	"	"	"	"
		151	"	"	1010 0000 0000	0101 1111 1111	"	"	V_{168}	"	"		"	"	"	"
		152	"	"	1011 0000 0000	0100 1111 1111	"	"	V_{169}	"	"		"	"	"	"
		153	"	"	1100 0000 0000	0011 1111 1111	"	"	V_{170}	"	"		"	"	"	"
		154	"	"	1101 0000 0000	0010 1111 1111	"	"	V_{171}	"	"		"	"	"	"
		155	"	"	1110 0000 0000	0001 1111 1111	"	"	V_{172}	"	"		"	"	"	"
	LE_{23}	156	"	"	1111 0000 0000	0000 1111 1111	"	"	V_{173}	"	"		"	"	"	"
					A. Record the DUT code-word, (XXXX 0000 0000), with the most positive error. B. Record the DUT code-word, (YYYY 0000 0000), with the most negative error.											
	LE_{24}	157	5 V	-15 V	Determine the sum of the recorded code-words obtained from tests 134 – 141 and from tests 142 – 156 for positive errors. Measure and calculate linearity error for the new DUT code-word (XXXX BBBB BBBB). (See Table I, note 9/). XXXX BBBB BBBB XXXX BBBB BBBB 1111		K_1, K_2	21	V_{174}	V	2	LE_{24} = 410/G_1(V_{174}-((on-bits) xS) – V_{149})	01, 02	-0.5	0.5	LSB
	LE_{25}	158	5 V	-15 V	Determine the sum of the recorded code-words obtained from tests 134 – 141 and from tests 142 – 156 for negative errors. Measure and calculate linearity error for the new DUT code-word (YYYY CCCC CCCC). (See Table I, note 9/). YYYY CCCC CCCC YYYY CCCC CCCC 1111		K_1, K_2	21	V_{175}	V	2	LE_{25} = 410/G_1(V_{175}-((on-bits) xS) – V_{149})	01, 02	-0.5	0.5	LSB

See footnotes at end of table.

TABLE III. Group A inspection for device types 01 and 02 – Continued.

Subgroup	Symbol	Test no.	Adapter pin numbers 1/				Energized relays	Measured pin			Figure	Equation	Device Types	Limits		Unit
			4	6	7 thru 18	24 thru 35		No.	Value	Unit				Min	Max	
4	MCE	159	5 V	-15 V	0111 1111 1111	1000 0000 0000	K_1, K_2	21	V_{176}	V	2	For each set of major carry codes N and	01, 02	-1.0	1.0	LSB
T_A = 25°C			"	"	1000 0000 0000	0111 1111 1111	"	"	V_{177}	"	"	N + 1, calculate the associated error in	"	"	"	"
		160	"	"	0011 1111 1111	1100 0000 0000	"	"	V_{178}	"	"	LSB's as follows:	"	"	"	"
			"	"	0100 0000 0000	1011 1111 1111	"	"	V_{179}	"	"		"	"	"	"
		161	"	"	0001 1111 1111	1110 0000 0000	"	"	V_{180}	"	"	MCE = 410((V_m(N) – V_m(N-1))/G_1 – 10/4096)	"	"	"	"
			"	"	0010 0000 0000	1101 1111 1111	"	"	V_{181}	"	"		"	"	"	"
		162	"	"	0000 1111 1111	1111 0000 0000	"	"	V_{182}	"	"	Where V_m = measured value V_{176} through V_{199}	"	"	"	"
			"	"	0001 0000 0000	1110 1111 1111	"	"	V_{183}	"	"	" N = N + 1" are the decimal equivalents of	"	"	"	"
		163	"	"	0000 0111 1111	1111 1000 0000	"	"	V_{184}	"	"	the code words in column "7 thru 18"	"	"	"	"
			"	"	0000 1000 0000	1111 0111 1111	"	"	V_{185}	"	"		"	"	"	"
		164	"	"	0000 0011 1111	1111 1100 0000	"	"	V_{186}	"	"	Example: For the first set	"	"	"	"
			"	"	0000 0100 0000	1111 1011 1111	"	"	V_{187}	"	"	N = 1000 0000 0000 = 2^{11} = 2048	"	"	"	"
		165	"	"	0000 0001 1111	1111 1110 0000	"	"	V_{188}	"	"	N – 1 = 0111 1111 1111 = 2^{11} - 1 = 2047	"	"	"	"
			"	"	0000 0010 0000	1111 1101 1111	"	"	V_{189}	"	"	and V_m(N) = V_{177}	"	"	"	"
		166	"	"	0000 0000 1111	1111 1111 0000	"	"	V_{190}	"	"	V_m(N-1) = V_{176}	"	"	"	"
			"	"	0000 0001 0000	1111 1110 1111	"	"	V_{191}	"	"		"	"	"	"
		167	"	"	0000 0000 0111	1111 1111 1000	"	"	V_{192}	"	"		"	"	"	"
			"	"	0000 0000 1000	1111 1111 0111	"	"	V_{193}	"	"		"	"	"	"
		168	"	"	0000 0000 0011	1111 1111 1100	"	"	V_{194}	"	"		"	"	"	"
			"	"	0000 0000 0100	1111 1111 1011	"	"	V_{195}	"	"		"	"	"	"
		169	"	"	0000 0000 0001	1111 1111 1110	"	"	V_{196}	"	"		"	"	"	"
			"	"	0000 0000 0010	1111 1111 1101	"	"	V_{197}	"	"		"	"	"	"
		170	"	"	0000 0000 0000	1111 1111 1111	"	"	V_{198}	"	"		"	"	"	"
			"	"	0000 0000 0001	1111 1111 1110	"	"	V_{199}	"	"		"	"	"	"
5	I_{CC}	171	15 V	-15 V	1111 1111 1111	1111 1111 1111	K_2, K_3	4	I_{34}	mA	2	I_{CC} = I_{34}	01	3	18	mA
T_A = 125°C							K_4, K_6						02	3	20	"
	I_{EE}	172	"	"	0000 0000 0000	1111 1111 1111	K_2, K_3 K_4, K_6	6	I_{35}	mA	"	I_{EE} = I_{35}	01, 02	-25	-5	"
	V_{REF}	173	"	"			K_4, K_6	36	V_{200}	V	"	V_{REF} = V_{200}	02	2.45	2.55	V
	I_{IH1}	174	"	"	1111 1111 1111	1111 1111 1111	K_6	7	I_{36}	µA	"	I_{IH1} = I_{36} V_{IN} = 10.50 V	01, 02	-1	100	µA
	I_{IH2}	175	"	"	"	"	"	8	I_{37}	"	"	I_{IH2} = I_{37} "	"	"	"	
	I_{IH3}	176	"	"	"	"	"	9	I_{38}	"	"	I_{IH3} = I_{38} "	"	"	"	"
	I_{IH4}	177	"	"	"	"	"	10	I_{39}	"	"	I_{IH4} = I_{39} "	"	"	"	"
	I_{IH5}	178	"	"	"	"	"	11	I_{40}	"	"	I_{IH5} = I_{40} "	"	"	"	"
	I_{IH6}	179	"	"	"	"	"	12	I_{41}	"	"	I_{IH6} = I_{41} "	"	"	"	"
	I_{IH7}	180	"	"	"	"	"	13	I_{42}	"	"	I_{IH7} = I_{42} "	"	"	"	"
	I_{IH8}	181	"	"	"	"	"	14	I_{43}	"	"	I_{IH8} = I_{43} "	"	"	"	"
	I_{IH9}	182	"	"	"	"	"	15	I_{44}	"	"	I_{IH9} = I_{44} "	"	"	"	"
	I_{IH10}	183	"	"	"	"	"	16	I_{45}	"	"	I_{IH10} = I_{45} "	"	"	"	"
	I_{IH11}	184	"	"	"	"	"	17	I_{46}	"	"	I_{IH11} = I_{46} "	"	"	"	"
	I_{IH12}	185	"	"	"	"	"	18	I_{47}	"	"	I_{IH12} = I_{47} "	"	"	"	"

See footnotes at end of table.

TABLE III. Group A inspection for device types 01 and 02 – Continued.

Subgroup	Symbol	Test no.	Adapter pin numbers 1/				Energized relays	Measured pin			Figure	Equation	Device Types	Limits		Unit
			4	6	7 thru 18	24 thru 35		No.	Value	Unit				Min	Max	
5 T_A = 125°C	I_{IL1}	186	15 V	-15 V	0000 0000 0000	1111 1111 1111	K6	7	I_{48}	µA	2	$I_{IL1} = I_{48}$ V_{IN} = 0 V	01, 02	-200	1	µA
	I_{IL2}	187	"	"	"	"	"	8	I_{49}	"	"	$I_{IL2} = I_{49}$ "	"	"	"	"
	I_{IL3}	188	"	"	"	"	"	9	I_{50}	"	"	$I_{IL3} = I_{50}$ "	"	"	"	"
	I_{IL4}	189	"	"	"	"	"	10	I_{51}	"	"	$I_{IL4} = I_{51}$ "	"	"	"	"
	I_{IL5}	190	"	"	"	"	"	11	I_{52}	"	"	$I_{IL5} = I_{52}$ "	"	"	"	"
	I_{IL6}	191	"	"	"	"	"	12	I_{53}	"	"	$I_{IL6} = I_{53}$ "	"	"	"	"
	I_{IL7}	192	"	"	"	"	"	13	I_{54}	"	"	$I_{IL7} = I_{54}$ "	"	"	"	"
	I_{IL8}	193	"	"	"	"	"	14	I_{55}	"	"	$I_{IL8} = I_{55}$ "	"	"	"	"
	I_{IL9}	194	"	"	"	"	"	15	I_{56}	"	"	$I_{IL9} = I_{56}$ "	"	"	"	"
	I_{IL10}	195	"	"	"		"	16	I_{57}	"	"	$I_{IL10} = I_{57}$ "	"	"	"	"
	I_{IL11}	196	"	"	"		"	17	I_{58}	"	"	$I_{IL11} = I_{58}$ "	"	"	"	"
	I_{IL12}	197	"	"	"	"	"	18	I_{59}	"	"	$I_{IL12} = I_{59}$ "	"	"	"	"
	I_{FS}	198	5 V	"	1111 1111 1111	1111 1111 0001	"	23	I_{60}	mA	"	$I_{FS} = I_{60}$	"	-2.7	-1.6	mA
	$+P_{SS1}$		5 V	"	1111 1111 1111	0000 0000 0000	K_1, K_2	21	V_{201}	V	"	$+P_{SS1} = \lvert(V_{202} - V_{201})/G_{1H}\rvert$ x 41 for $-\Delta V_{CC}$	01	-0.07	0.07	LSB/%PS
		199	4.5 V	"	1111 1111 1111	0000 0000 0000	"	"	V_{202}	"	"	(outputs on)	02	-0.25	0.25	"
			4.75 V	"												
		200	5.5 V	"	1111 1111 1111	0000 0000 0000	"	"	V_{203}	"	"	$+P_{SS1} = \lvert(V_{203} - V_{201})/G_{1H}\rvert$ x 41 for $+\Delta V_{CC}$ (outputs on)				
			5.25 V	"												
			2/													
			5 V	"	0000 0000 0000	1111 1111 1111	"	"	V_{204}	"	"	$+P_{SS1} = \lvert(V_{205} - V_{204})/G_{1H}\rvert$ x 41 for $-\Delta V_{CC}$ (outputs off)	01	-0.07	0.07	"
		201	4.5 V	"	0000 0000 0000	1111 1111 1111	"	"	V_{205}	"	"		02	-0.25	0.25	"
			4.75 V	"												
		202	5.5 V	"	0000 0000 0000	1111 1111 1111	"	"	V_{206}	"	"	$+P_{SS1} = \lvert(V_{206} - V_{204})/G_{1H}\rvert$ x 41 for $+\Delta V_{CC}$ (outputs off)				
			5.25 V	"												
			2/													
	$+P_{SS2}$		15 V	"	1111 1111 1111	0000 0000 0000	K_1,K_2,K_6	"	V_{207}	"	"	$+P_{SS2} = \lvert(V_{208} - V_{207})/G_{1H}\rvert$ x 41 for $-\Delta V_{CC}$	01	-0.07	0.07	"
		203	13.5 V	"	1111 1111 1111	0000 0000 0000	"	"	V_{208}	"	"	(outputs on)	02	-0.25	0.25	"
			14.25 V	"												
		204	16.5 V	"	1111 1111 1111	0000 0000 0000	"	"	V_{209}	"	"	$+P_{SS2} = \lvert(V_{209} - V_{207})/G_{1H}\rvert$ x 41 for $+\Delta V_{CC}$ (outputs on)				
			15.75 V	"												
			2/													
			15 V	"	0000 0000 0000	1111 1111 1111	"	"	V_{210}	"	"	$+P_{SS2} = \lvert(V_{211} - V_{210})/G_{1H}\rvert$ x 41 for $-\Delta V_{CC}$ (outputs off)	01	-0.07	0.07	"
		205	13.5 V	"	0000 0000 0000	1111 1111 1111	"	"	V_{211}	"	"		02	-0.25	0.25	"
			14.25 V	"												
		206	16.5 V	"	0000 0000 0000	1111 1111 1111	"	"	V_{212}	"	"	$+P_{SS2} = \lvert(V_{212} - V_{210})/G_{1H}\rvert$ x 41 for $+\Delta V_{CC}$ (outputs off)				
			15.75 V	"												
			2/													
	$-P_{SS}$		5 V	-15 V	1111 1111 1111	0000 0000 0000	K_1, K_2	"	V_{213}	"	"	$-P_{SS} = \lvert(V_{214} - V_{213})/G_{1H}\rvert$ x 41 for $-\Delta V_{CC}$	01	-0.15	0.15	"
		207	"	-13.5 V	1111 1111 1111	0000 0000 0000	"	"	V_{214}	"	"	(outputs on)	02	-0.5	0.5	"
			"	-14.25 V												
		208	"	-16.5 V	1111 1111 1111	0000 0000 0000	"	"	V_{215}	"	"	$-P_{SS} = \lvert(V_{215} - V_{213})/G_{1H}\rvert$ x 41 for $+\Delta V_{CC}$ (outputs on)				
			"	-15.75 V												
			"	2/												
			"	-15 V	0000 0000 0000	1111 1111 1111	"	"	V_{216}	"	"	$-P_{SS} = \lvert(V_{217} - V_{216})/G_{1H}\rvert$ x 41 for $-\Delta V_{CC}$ (outputs off)	01	-0.15	0.15	"
		209	"	-13.5 V	0000 0000 0000	1111 1111 1111	"	"	V_{217}	"	"		02	-0.5	0.5	"
			"	-14.25 V												
		210	"	-16.5 V	0000 0000 0000	1111 1111 1111	"	"	V_{218}	"	"	$-P_{SS} = \lvert(V_{218} - V_{216})/G_{1H}\rvert$ x 41 for $+\Delta V_{CC}$ (outputs off)				
			"	-15.75 V												
				2/												

See footnotes at end of table.

TABLE III. Group A inspection for device types 01 and 02 – Continued.

Subgroup	Symbol	Test no.	Adapter pin numbers 1/				Energized relays	Measured pin			Figure	Equation		Device Types	Limits		Unit
			4	6	7 thru 18	24 thru 35		No.	Value	Unit					Min	Max	
6 T_A = -55°C	I_{CC}	211	15 V	-15 V	1111 1111 1111	1111 1111 1111	K_2, K_3 K_4, K_6	4	I_{61}	mA	2	$I_{CC} = I_{61}$		01 02	3 3	18 20	mA “
	I_{EE}	212	“	“	0000 0000 0000	1111 1111 1111	K_2, K_3 K_4, K_6	6	I_{62}	mA	“	$I_{EE} = I_{62}$		01, 02	-25	-5	“
	V_{REF}	213	“	“			K_4, K_6		V_{219}	V	“	$V_{REF} = V_{219}$		02	2.45	2.55	V
	I_{IH1}	214	“	“	1111 1111 1111	1111 1111 1111	K_6	7	I_{63}	µA	“	$I_{IH1} = I_{63}$	V_{IN} = 10.50 V	01, 02	-1	100	µA
	I_{IH2}	215	“	“	“	“	“	8	I_{64}	“	“	$I_{IH2} = I_{64}$	“	“	“	“	
	I_{IH3}	216	“	“	“	“	“	9	I_{65}	“	“	$I_{IH3} = I_{65}$	“	“	“	“	“
	I_{IH4}	217	“	“	“	“	“	10	I_{66}	“	“	$I_{IH4} = I_{66}$	“	“	“	“	“
	I_{IH5}	218	“	“	“	“	“	11	I_{67}	“	“	$I_{IH5} = I_{67}$	“	“	“	“	“
	I_{IH6}	219	“	“	“	“	“	12	I_{68}	“	“	$I_{IH6} = I_{68}$	“	“	“	“	“
	I_{IH7}	220	“	“	“	“	“	13	I_{69}	“	“	$I_{IH7} = I_{69}$	“	“	“	“	“
	I_{IH8}	221	“	“	“	“	“	14	I_{70}	“	“	$I_{IH8} = I_{70}$	“	“	“	“	“
	I_{IH9}	222	“	“	“	“	“	15	I_{71}	“	“	$I_{IH9} = I_{71}$	“	“	“	“	“
	I_{IH10}	223	“	“	“	“	“	16	I_{72}	“	“	$I_{IH10} = I_{72}$	“	“	“	“	“
	I_{IH11}	224	“	“	“	“	“	17	I_{73}	“	“	$I_{IH11} = I_{73}$	“	“	“	“	“
	I_{IH12}	225	“	“	“	“	“	18	I_{74}	“	“	$I_{IH12} = I_{74}$	“	“	“	“	“
	I_{IL1}	226	“	“	0000 0000 0000	1111 1111 1111	“	7	I_{75}	“	“	$I_{IL1} = I_{75}$	V_{IN} = 0 V	01, 02	-200	1	“
	I_{IL2}	227	“	“	“	“	“	8	I_{76}	“	“	$I_{IL2} = I_{76}$	“	“	“	“	“
	I_{IL3}	228	“	“	“	“	“	9	I_{77}	“	“	$I_{IL3} = I_{77}$	“	“	“	“	“
	I_{IL4}	229	“	“	“	“	“	10	I_{78}	“	“	$I_{IL4} = I_{78}$	“	“	“	“	“
	I_{IL5}	230	“	“	“	“	“	11	I_{79}	“	“	$I_{IL5} = I_{79}$	“	“	“	“	“
	I_{IL6}	231	“	“	“	“	“	12	I_{80}	“	“	$I_{IL6} = I_{80}$	“	“	“	“	“
	I_{IL7}	232	“	“	“	“	“	13	I_{81}	“	“	$I_{IL7} = I_{81}$	“	“	“	“	“
	I_{IL8}	233	“	“	“	“	“	14	I_{82}	“	“	$I_{IL8} = I_{82}$	“	“	“	“	“
	I_{IL9}	234	“	“	“	“	“	15	I_{83}	“	“	$I_{IL9} = I_{83}$	“	“	“	“	“
	I_{IL10}	235	“	“	“		“	16	I_{84}	“	“	$I_{IL10} = I_{84}$	“	“	“	“	“
	I_{IL11}	236	“	“	“		“	17	I_{85}	“	“	$I_{IL11} = I_{85}$	“	“	“	“	“
	I_{IL12}	237	“	“	“	“	“	18	I_{86}	“	“	$I_{IL12} = I_{86}$	“	“	“	“	“
	I_{FS}	238	5 V	“	1111 1111 1111	1111 1111 1111	“	23	I_{87}	mA	“	$I_{FS} = I_{87}$		“	-2.7	-1.6	mA

See footnote at end of table.

TABLE III. Group A inspection for device types 01 and 02 – Continued.

Subgroup	Symbol	Test no.	Adapter pin numbers 1/				Energized relays	Measured pin			Figure	Equation	Device Types	Limits		Unit
			4	6	7 thru 18	24 thru 35		No.	Value	Unit				Min	Max	
6 T_A = -55°C	$+P_{SS1}$		5 V	-15 V	1111 1111 1111	0000 0000 0000	K_1, K_2	21	V_{220}	V	2	$+P_{SS1}$ = $\lvert(V_{221} – V_{220})/G_{1L}\rvert$ x 41 for $-\Delta V_{CC}$ (outputs on)	01	-0.07	0.07	LSB/%PS
		239	4.5 V	"	1111 1111 1111	0000 0000 0000	"	"	V_{221}	"	"		02	-0.25	0.25	"
			4.75 V	"												
		240	5.5 V	"	1111 1111 1111	0000 0000 0000	"	"	V_{222}	"	"	$+P_{SS1}$ = $\lvert(V_{222} – V_{220})/G_{1L}\rvert$ x 41 for $+\Delta V_{CC}$ (outputs on)				
			5.25 V	"												
			2/													
			5 V	"	0000 0000 0000	1111 1111 1111	"	"	V_{223}	"	"	$+P_{SS1}$ = $\lvert(V_{224} – V_{223})/G_{1L}\rvert$ x 41 for $-\Delta V_{CC}$ (outputs off)	01	-0.07	0.07	"
		241	4.5 V	"	0000 0000 0000	1111 1111 1111	"	"	V_{224}	"	"		02	-0.25	0.25	"
			4.75 V	"												
		242	5.5 V	"	0000 0000 0000	1111 1111 1111	"	"	V_{225}	"	"	$+P_{SS1}$ = $\lvert(V_{225} – V_{223})/G_{1L}\rvert$ x 41 for $+\Delta V_{CC}$ (outputs off)				
			5.25 V	"												
			2/													
	$+P_{SS2}$		15 V	"	1111 1111 1111	0000 0000 0000	K_1,K_2,K_6	"	V_{226}	"	"	$+P_{SS2}$ = $\lvert(V_{227} – V_{226})/G_{1L}\rvert$ x 41 for $-\Delta V_{CC}$ (outputs on)	01	-0.07	0.07	"
		243	13.5 V	"	1111 1111 1111	0000 0000 0000	"	"	V_{227}	"	"		02	-0.25	0.25	"
			14.25 V	"												
		244	16.5 V	"	1111 1111 1111	0000 0000 0000	"	"	V_{228}	"	"	$+P_{SS2}$ = $\lvert(V_{228} – V_{226})/G_{1L}\rvert$ x 41 for $+\Delta V_{CC}$ (outputs on)				
			15.75 V	"												
			2/													
			15 V	"	0000 0000 0000	1111 1111 1111	"	"	V_{229}	"	"	$+P_{SS2}$ = $\lvert(V_{230} – V_{229})/G_{1L}\rvert$ x 41 for $-\Delta V_{CC}$ (outputs off)	01	-0.07	0.07	"
		245	13.5 V	"	0000 0000 0000	1111 1111 1111	"	"	V_{230}	"	"		02	-0.25	0.25	"
			14.25 V	"												
		246	16.5 V	"	0000 0000 0000	1111 1111 1111	"	"	V_{231}	"	"	$+P_{SS2}$ = $\lvert(V_{231} – V_{229})/G_{1L}\rvert$ x 41 for $+\Delta V_{CC}$ (outputs off)				
			15.75 V	"												
	$-P_{SS}$		5 V	-15 V	1111 1111 1111	0000 0000 0000	K_1, K_2	"	V_{232}	"	"	$-P_{SS}$ = $\lvert(V_{233} – V_{232})/G_{1L}\rvert$ x 41 for $-\Delta V_{CC}$ (outputs on)	01	-0.15	0.15	"
		247	"	-13.5 V	1111 1111 1111	0000 0000 0000	"	"	V_{233}	"	"		02	-0.5	0.5	"
			"	-14.25 V												
		248	"	-16.5 V	1111 1111 1111	0000 0000 0000	"	"	V_{234}	"	"	$-P_{SS}$ = $\lvert(V_{234} – V_{232})/G_{1L}\rvert$ x 41 for $+\Delta V_{CC}$ (outputs on)				
			"	-15.75 V												
			"	2/												
			"	-15 V	0000 0000 0000	1111 1111 1111	"	"	V_{235}	"	"	$-P_{SS}$ = $\lvert(V_{236} – V_{235})/G_{1L}\rvert$ x 41 for $-\Delta V_{CC}$ (outputs off)	01	-0.15	0.15	"
		249	"	-13.5 V	0000 0000 0000	1111 1111 1111	"	"	V_{236}	"	"		02	-0.5	0.5	"
			"	-14.25 V												
		250	"	-16.5 V	0000 0000 0000	1111 1111 1111	"	"	V_{237}	"	"	$-P_{SS}$ = $\lvert(V_{237} – V_{235})/G_{1L}\rvert$ x 41 for $+\Delta V_{CC}$ (outputs off)				
			"	-15.75 V												
			2/													
7 T_A = 25°C	LE		"	-15 V	1111 1111 1111	0000 0000 0000	"	"	V_{238}	"	"	LE = $410/G_1(V_A –((V_{238} – V_{239})/4095)N-V_{238})$	01, 02			
			"	"	0000 0000 0000	1111 1111 1111	"	"	V_{239}	"	"		"			
			"	"	0000 0000 0001	1111 1111 1110	"	"	V_{240}	"	"	Where V_A = measured value from V_{240}	"			
			"	"	0000 0000 0010	1111 1111 1101	"	"	V_{241}	"	"	Through V_{4333}	"			
			"	"	0000 0000 0011	1111 1111 1100	"	"	V_{242}	"	"		"			
			"	"	0000 0000 0100	1111 1111 1011	"	"	V_{243}	"	"		"			
			"	"		"	"	"	V…	"	"		"			
			"	"		"	"	"	V…	"	"		"			
			"	"		"	"	"	V…	"	"		"			
			"	"	1111 1111 1100	0000 0000 0011	"	"	V_{4331}	"	"		"			
			"	"	1111 1111 1101	0000 0000 0010	"	"	V_{4332}	"	"		"			
			"	"	1111 1111 1110	0000 0000 0001	"	"	V_{4333}	"	"		"			
		251	"	"			"	"		"	"	Worst positive error	"	0	0.5	LSB
			"	"			"	"		"	"	Worst positive code	"	-	---	OCT
		252	"	"			"	"		"	"	Worst negative error	"	0	0.5	LSB
			"	"			"	"		"	"	Worst negative code	"	-	---	OCT

See footnotes at end of table.

TABLE III. Group A inspection for device types 01 and 02 – Continued.

Subgroup	Symbol	Test no.	Adapter pin numbers 1/				Energized relays	Measured pin			Figure	Equation	Device Types	Limits		Unit
			4	6	7 thru 18	24 thru 35		No.	Value	Unit				Min	Max	
8 T_A = 125°C	LE		5 V	-15 V	1111 1111 1111	0000 0000 0000	K_1, K_2	21	V_{4334}	V	2	For each input code N, calculate the Corresponding linearity in LSB's.	01, 02			
			"	"	0000 0000 0000	1111 1111 1111	"	"	V_{4335}	"	"		"			
			"	"	0000 0000 0001	1111 1111 1110	"	"	V_{4336}	"	"		"			
			"	"	0000 0000 0010	1111 1111 1101	"	"	V_{4337}	"	"		"			
			"	"	0000 0000 0011	1111 1111 1100	"	"	V_{4338}	"	"	LE = 410/G_{1H}(V_A –((V_{4334} – V_{4335})/4095)N-V_{4334})	"			
			"	"	0000 0000 0100	1111 1111 1011	"	"	V_{4339}	"	"	Where V_A = measured value from V_{4334}	"			
			"	"		"	"	"	V…	"	"	Through V_{8429}	"			
			"	"		"	"	"	V…	"	"		"			
			"	"		"	"	"	V…	"	"		"			
			"	"	1111 1111 1100	0000 0000 0011	"	"	V_{8427}	"	"		"			
			"	"	1111 1111 1101	0000 0000 0010	"	"	V_{8428}	"	"		"			
			"	"	1111 1111 1110	0000 0000 0001	"	"	V_{8429}	"	"		"			
		253	"	"			"	"		"	"	Worst positive error	"	0	0.5	LSB
			"	"			"	"		"	"	Worst positive code	"	-	---	OCT
		254	"	"			"	"		"	"	Worst negative error	"	0	0.5	LSB
			"	"			"	"		"	"	Worst negative code	"	-	---	OCT
	$\frac{dI_{ZS}}{dt}$	255	Calculate dI_{ZS}/dt = (I_{ZS1} at 125°C – I_{ZS1} at 25°C)/100°C from tests 42 and 130 respectively.										01, 02	-0.01	0.01	LSB/°C
	$\frac{dA_{E1}}{dt}$	256	Calculate dA_E/dt = (A_E at 125°C – A_E at 25°C)/100°C from tests 44 and 132 respectively.										01 02	-5.0 -30.0	5.0 30.0	PPM/°C PPM/°C
	$\frac{dB_{POE}}{dt}$	257	Calculate dB_{POE}/dt = (B_{POE} at 125°C – B_{POE} at 25°C)/100°C from tests 45 and 128 respectively.										01 02	-0.02 -0.12	0.2 0.12	LSB/°C "
	$\frac{dB_{ZE}}{dt}$	258	Calculate dB_{ZE}/dt = (B_{ZE} at 125°C – B_{ZE} at 25°C)/100°C from tests 46 and 129 respectively.										01 02	-0.02 -0.04	0.02 0.04	" "
8 T_A = -55°C	LE	259 thru 260	Same tests, terminal conditions and limits as in subgroup 7, tests 251 thru 252 except T_A = -55°C (V_{OS} and V_{FS} are the values determined in subgroup 3.)										01, 02	-0.5 - 0 -	0.5 - 0.5 -	LSB OCT LSB OCT
	$\frac{dI_{ZS}}{dt}$	261	Calculate dI_{ZS}/dt = (I_{ZS1} at -55°C – I_{ZS1} at 25°C)/80°C from tests 85 and 130 respectively.										01, 02	-0.1	0.1	LSB/°C
	$\frac{dA_{E1}}{dt}$	262	Calculate dA_E/dt = (A_E at -55°C – A_E at 25°C)/80°C from tests 87 and 132 respectively.										01 02	-5.0 -30.0	5.0 30.0	PPM/°C PPM/°C
	$\frac{dB_{POE}}{dt}$	263	Calculate dB_{POE}/dt = (B_{POE} at -55°C – B_{POE} at 25°C)/80°C from tests 88 and 128 respectively.										01 02	-0.02 -0.12	0.02 0.12	LSB/°C "
	$\frac{dB_{ZE}}{dt}$	264	Calculate dB_{ZE}/dt = (B_{ZE} at -55°C – B_{ZE} at 25°C)/80°C from tests 89 and 129 respectively.										01 02	-0.02 -0.04	0.02 0.04	" "

See footnotes at end of table.

TABLE III. Group A inspection for device types 01 and 02 – Continued.

Subgroup	Symbol	Test no.	Test condition	Measured pin			Equation	Device Types	Limits		Unit
				No.	Value	Unit			Min	Max	
8 T_A = 125°C	t_{SLH}	265	V_{CC} = +5 V V_{EE} = -15 V VIN switched from all inputs at logic "0" to all inputs at Logic "1" figure 3	9	t_1	µs	$t_{SLH} = t_1$	01, 02	----	3.0	µs
	t_{SHL}	266	V_{CC} = +5 V V_{EE} = -15 V VIN switched from all inputs at logic "1" to all inputs at Logic "0" figure 3	9	t_2	µs	$t_{SHL} = t_2$	01, 02	----	3.0	µs
	Ri	267	V_{CC} = +5 V V_{EE} = -15 V V_{ref} = 10 V figure 4	5	I_{88}	mA	$Ri = 10/I_{88}$	01	15	25	kΩ
	N_{O2}	268	V_{CC} = +5 V V_{EE} = -15 V V_{IN} = all inputs at logic "1"	9	V_{12526}	mV	$N_{O2} = V_{12526}/100$	01 02	---- ----	60 100	μV_{rms}

1/ Apply +15 Vdc to adapter pin1.
Apply –15 Vdc to adapter pin 2.
Connect power supply ground to adapter pins 3 and 5.

1/(01/4096) ≈ 410

2/ The power supplies for device types 02 are varied by 5% (i.e. 15 x 0.05 = 0.75).

3/ The calculation of G1 can be found in test no. 132 in this table.

TABLE III. Group A inspection for device types 03 and 04.

Subgroup	Symbol	Test no.	Adapter pin numbers 1/				Energized relays	Measured pin			Equation 2/	Device Types	Limits		Unit
			4	6	7 thru 18	22 thru 37		No.	Value	Unit			Min	Max	
Calibration		1	Adjust P6 with all bits at 0 V				None	21	E_1	µV	Ecal = E_1	03, 04	---	100	µV
1 T_A = 25°C	I_{CC}	2	15 V	-15 V	1111 1111 1111	1111 1111 1111 1111	"	4	I_1	mA	$I_{CC} = I_1$ (Digital 1 = 2.4 V)	03	1	5	mA
	I_{EE}	3	"	"	0000 0000 0000	1111 1111 1111 1111	"	6	I_2	mA	$I_{EE} = I_2$ (Digital 0 = 0.8 V)	03, 04	-18	-5	mA
	V_{REF}	4	"	"	0000 0000 0000		"	2	E_2	V	$V_{REF} = E_2$ Iref = 2 mA	03	9.90	10.1	V
	I_{IL}	5	"	"	0000 0000 0000	1111 1111 1111 1111		7	I_3	µA	$I_{IL} = I_3$ (Digital 0 = 0 V)	03 04	-100 5	100 100	µA "
		6	"	"	"	"	"	8	I_4	"	$I_{IL} = I_4$ "	03 04	-100 5	100 100	" "
		7	"	"	"	"	"	9	I_5	"	$I_{IL} = I_5$ "	03 04	-100 5	100 100	" "
		8	"	"	"	"	"	10	I_6	"	$I_{IL} = I_6$ "	03 04	-100 5	100 100	" "
		9	"	"	"	"	"	11	I_7	"	$I_{IL} = I_7$ "	03 04	-100 5	100 100	" "
		10	"	"	"	"	"	12	I_8	"	$I_{IL} = I_8$ "	03 04	-100 5	100 100	" "
		11	"	"	"	"	"	13	I_9	"	$I_{IL} = I_9$ "	03 04	-100 5	100 100	" "
		12	"	"	"	"	"	14	I_{10}	"	$I_{IL} = I_{10}$ "	03 04	-100 5	100 100	" "
		13	"	"	"	"	"	15	I_{11}	"	$I_{IL} = I_{11}$ "	03 04	-100 5	100 100	" "
		14	"	"	"	"	"	16	I_{12}	"	$I_{IL} = I_{12}$ "	03 04	-100 5	100 100	" "
		15	"	"	"	"	"	17	I_{13}	"	$I_{IL} = I_{13}$ "	03 04	-100 5	100 100	" "
		16	"	"	"	"	"	18	I_{14}	"	$I_{IL} = I_{14}$ "	03 04	-100 5	100 100	" "
	I_{IH}	17	"	"	1111 1111 1111	1111 1111 1111 1111	"	7	I_{15}	"	$I_{IH} = I_{15}$ (Digital 1 = 5.5 V)	03 04	-300 145	300 300	" "
		18	"	"	"	"	"	8	I_{16}	"	$I_{IH} = I_{16}$ "	03 04	-300 145	300 300	" "
		19	"	"	"	"	"	9	I_{17}	"	$I_{IH} = I_{17}$ "	03 04	-300 145	300 300	" "
		20	"	"	"	"	"	10	I_{18}	"	$I_{IH} = I_{18}$ "	03 04	-300 145	300 300	" "
		21	"	"	"	"	"	11	I_{19}	"	$I_{IH} = I_{19}$ "	03 04	-300 145	300 300	" "
		22	"	"	"	"	"	12	I_{20}	"	$I_{IH} = I_{20}$ "	03 04	-300 145	300 300	" "
		23	"	"	"	"	"	13	I_{21}	"	$I_{IH} = I_{21}$ "	03 04	-300 145	300 300	" "
		24	"	"	"	"	"	14	I_{22}	"	$I_{IH} = I_{22}$ "	03 04	-300 145	300 300	" "
		25	"	"	"	"	"	15	I_{23}	"	$I_{IH} = I_{23}$ "	03 04	-300 145	300 300	" "
		26	"	"	"	"	"	16	I_{24}	"	$I_{IH} = I_{24}$ "	03 04	-300 145	300 300	" "
		27	"	"	"	"	"	17	I_{25}	"	$I_{IH} = I_{25}$ "	03 04	-300 145	300 300	" "
		28	"	"	"	"	"	18	I_{26}	"	$I_{IH} = I_{26}$ "	03 04	-300 145	300 300	" "

See footnotes at end of table.

TABLE III. Group A inspection for device types 03 and 04 – Continued.

Subgroup	Symbol	Test no.	Adapter pin numbers 1/				Energized relays	Measured pin			Equation 2/	Device Types	Limits		Unit
			4	6	7 thru 18	22 thru 37		No.	Value	Unit			Min	Max	
1 $T_A = 25°C$	I_{FS}	29	+15 V	-15 V	1111 1111 1111	1111 1111 1111 1111	K_1	19	I_{27}	mA	$I_{FS} = I_{27}$	03, 04	-2.7	-1.6	mA
	$+P_{SS}$	30	+13.5 V	"	"	0000 0000 0000 1111	None	21	E_3	V	$+P_{SS} = 0.41\ (E_4 - E_3)$	03	-0.04	0.04	LSB/%PS
		31	+15 V	"	"	"	"	"	E_4	"		"	"	"	"
		32	+16.5 V	"	"	"	"	"	E_5	"	$+P_{SS} = 0.41\ (E_4 - E_5)$	"	"	"	"
	$-P_{SS}$	33	+15 V	-13.5 V	"	"	"	"	E_6	"	$-P_{SS} = 0.41\ (E_6 - E_7)$	03, 04	-0.1	0.1	"
		34	"	-15 V	"	"	"	"	E_7	"		"	"	"	"
		35	"	-16.5 V	"	"	"	"	E_8	"	$-P_{SS} = 0.41\ (E_6 - E_8)$	"	"	"	"
2 $T_A = 125°C$	V_{REF}	36	+15 V	-15 V	0000 0000 0000	1111 1111 1111 1111	"	2	E_9	"	$V_{REF} = E_9 \quad I_{REF} = 2$ mA	03	9.90	10.1	V
	I_{ZS1}	37	"	"	0000 0000 0000	1111 1111 1111 1111	"	19	I_{28}	µA	$I_{ZS1} = (I_{28})\ (4096)/(I_{56} - I_{28})$	03, 04	-3	3	LSB
	A_E	38	"	"	1111 1111 1111	0000 0000 0000 1111	"	21	E_{10}	V	$A_E = 0.1\ (E_{10} - E_{11})$	03	-0.50	0.50	%
			"	"	0000 0000 0000	1111 1111 1111 1111	"	"	E_{11}	"		04	-0.30	0.30	
	B_{POE}	39	"	"	0000 0000 0000	1111 1111 1111 1111	K_2, K_3	"	E_{12}	"	$B_{POE} = (-2.05)\ (E_{12})$	03	-20	20	LSB
												04	-12	12	
	B_{ZE}	41	"	"	1000 0000 0000	0111 1111 1111 1111	K_2	"	E_{14}	"	$B_{ZE} = (-2.05)\ (E_{14})$	"	-10	10	LSB
	LE_1	42	"	"	0001 0000 0000	1110 1111 1111 1111	None	"	E_{15}	"	For each input code N calculate the	"	-0.5	+0.5	"
		43	"	"	0010 0000 0000	1101 "	"	"	E_{16}	"	Corresponding linearity error in LSB.	"	"	"	"
		44	"	"	0011 0000 0000	1100 "	"	"	E_{17}	"		"	"	"	"
		45	"	"	0100 0000 0000	1011 "	"	"	E_{18}	"	LE = 4.1((E10-E11)(N/4095) + E11 –EA)	"	"	"	"
		46	"	"	0101 0000 0000	1010 "	"	"	E_{19}	"		"	"	"	"
		47	"	"	0110 0000 0000	1001 "	"	"	E_{20}	"	where	"	"	"	"
		48	"	"	0111 0000 0000	1000 "	"	"	E_{21}	"	EA = measured value E_{15} through E_{37}	"	"	"	"
		49	"	"	1000 0000 0000	0111 "	"	"	E_{22}	"	N = DUT input digital code word in decimal form	"	"	"	"
		50	"	"	1001 0000 0000	0110 "	"	"	E_{23}	"	Thus for 12 bits N = (A1)(2 exp 11) + (A2)	"	"	"	"
		51	"	"	1010 0000 0000	0101 "	"	"	E_{24}	"	(2 exp 10)+ … +(A12)(2 exp 0)	"	"	"	"
		52	"	"	1011 0000 0000	0100 "	"	"	E_{25}	"	A1, A2, A12 are 0 or 1.	"	"	"	"
		53	"	"	1100 0000 0000	0011 "	"	"	E_{26}	"	E_3 and E_4 correspond to the error amplifier	"	"	"	"
		54	"	"	1101 0000 0000	0010 "	"	"	E_{27}	"	Outputs at full scale and zero scale	"	"	"	"
		55	"	"	1110 0000 0000	0001 "	"	"	E_{28}	"	Respectively.	"	"	"	"
	LE_{15}	56	"	"	1111 0000 0000	0000 "	"	"	E_{29}	"		"	"	"	"
						A. Record the DUT code-word, (XXXX 0000 0000), with the most positive error.						"	"	"	"
						B. Record the DUT code-word, (YYYY 0000 0000), with the most negative error.						"	"	"	"

See footnotes at end of table.

TABLE III. Group A inspection for device types 03 and 04 – Continued.

Subgroup	Symbol	Test no.	Adapter pin numbers 1/				Energized relays	Measured pin			Equation 2/	Device Types	Limits		Unit
			4	6	7 thru 18	22 thru 37		No.	Value	Unit			Min	Max	
2	LE_{16}	57	+15 V	-15 V	0000 0000 0001	1111 1111 1111 1111	None	21	E_{30}	V		03, 04	-0.5	0.5	LSB
T_A = 125°C		58	"	"	0000 0000 0010	1111 1111 1101 1111	"	"	E_{31}	"	$S = ((E_{10} – E_{11})/4095)$	"	"	"	"
		59	"	"	0000 0000 0100	1111 1111 1011 1111	"	"	E_{32}	"		"	"	"	"
	LE_{19}	60	"	"	0000 0000 1000	1111 1111 0111 1111	"	"	E_{33}	"		"	"	"	"
	LE_{20}	61	"	"	0000 0001 0000	1111 1110 1111 1111	"	"	E_{34}	"		"	"	"	"
		62	"	"	0000 0010 0000	1111 1101 1111 1111	"	"	E_{35}	"		"	"	"	"
		63	"	"	0000 0100 0000	1111 1011 1111 1111	"	"	E_{36}	"		"	"	"	"
	LE_{23}	64	"	"	0000 1000 0000	1111 0111 1111 1111	"	"	E_{37}	"		"	"	"	"
			"	"	A. Record, (0000 BBBB BBBB), the sum of the codewords from tests 57 – 64 with positive linearity errors.							"	"	"	"
			"	"	B. Record, (0000 CCCC CCCC), the sum of the codewords from tests 57 – 64 with negative linearity errors.							"	"	"	"
			"	"	Determine the sum of the recorded code-words obtained from tests 42 – 56 from tests 57 – 64 for positive errors.							"	"	"	"
			"	"	Measure and calculate linearity error for the new DUT code-word (XXXX BBBB BBBB). (See Table I, Note 9/)							"	"	"	"
	LE_{24}	65	"	"	XXXX BBBB BBBB XXXX BBBB BBBB 1111		None	"	E_{38}	"	$LE_{24} = 4.1(E_{11} + ((\text{on-bits}) \times S) – E_{38})$	"	"	"	"
			"	"	Determine the sum of the recorded code-words obtained from tests 42 – 56 from tests 57 – 64 for negative errors.							"	"	"	"
			"	"	Measure and calculate linearity error for the new DUT code-word (YYYY CCCC CCCC). (See Table I, Note 9/)							"	"	"	"
	LE_{25}	66	"	"	YYYY CCCC CCCC YYYY CCCC CCCC 1111		None	"	E_{39}	"	$LE_{25} = 4.1(E_{11} + ((\text{on-bits}) \times S) – E_{39})$	"			
	MCE	67	"	"	0111 1111 1111	1000 0000 0000 1111	"	"	E_{40}	"	For each set of major carry codes N and N + 1	"	-1.0	1.0	"
			"	"	1000 0000 0000	0111 1111 1111 1111	"	"	E_{41}	"	Calculate the associated error in LSB's as	"	"	"	"
		68	"	"	0011 1111 1111	1100 0000 0000 1111	"	"	E_{42}	"	Follows:	"	"	"	"
			"	"	0100 0000 0000	1011 1111 1111 1111	"	"	E_{43}	"		"	"	"	"
		69	"	"	0001 1111 1111	1110 0000 0000 1111	"	"	E_{44}	"	MCE = 4.1 (EA – EB)	"	"	"	"
			"	"	0010 0000 0000	1101 1111 1111 1111	"	"	E_{45}	"		"	"	"	"
		70	"	"	0000 1111 1111	1111 0000 0000 1111	"	"	E_{46}	"	where	"	"	"	"
			"	"	0001 0000 0000	1110 1111 1111 1111	"	"	E_{47}	"	EB = measured value from E_{40},E_{42},E_{44},etc.	"	"	"	"
		71	"	"	0000 0111 1111	1111 1000 0000 1111	"	"	E_{48}	"	EA = measured value from E_{41},E_{43},E_{45},etc.	"	"	"	"
			"	"	0000 1000 0000	1111 0111 1111 1111	"	"	E_{49}	"		"	"	"	"
		72	"	"	0000 0011 1111	1111 1100 0000 1111	"	"	E_{50}	"		"	"	"	"
			"	"	0000 0100 0000	1111 1011 1111 1111	"	"	E_{51}	"		"	"	"	"
		73	"	"	0000 0001 1111	1111 1110 0000 1111	"	"	E_{52}	"		"	"	"	"
			"	"	0000 0010 0000	1111 1101 1111 1111	"	"	E_{53}	"		"	"	"	"
		74	"	"	0000 0000 1111	1111 1111 0000 1111	"	"	E_{54}	"		"	"	"	"
			"	"	0000 0001 0000	1111 1110 1111 1111	"	"	E_{55}	"		"	"	"	"
		75	"	"	0000 0000 0111	1111 1111 1000 1111	"	"	E_{56}	"		"	"	"	"
			"	"	0000 0000 1000	1111 1111 0111 1111	"	"	E_{57}	"		"	"	"	"
		76	"	"	0000 0000 0011	1111 1111 1100 1111	"	"	E_{58}	"		"	"	"	"
			"	"	0000 0000 0100	1111 1111 1011 1111	"	"	E_{59}	"		"	"	"	"
		77	"	"	0000 0000 0001	1111 1111 1110 1111	"	"	E_{60}	"		"	"	"	"
			"	"	0000 0000 0010	1111 1111 1101 1111	"	"	E_{61}	"		"	"	"	"
		78	"	"	0000 0000 0000	1111 1111 1111 1111	"	"	E_{62}	"		"	"	"	"
			"	"	0000 0000 0001	1111 1111 1110 1111	"	"	E_{63}	"		"	"	"	"

See footnotes at end of table.

TABLE III. Group A inspection for device types 03 and 04 – Continued.

Subgroup	Symbol	Test no.	Adapter pin numbers 1/				Energized relays	Measured pin			Equation 2/	Device Types	Limits		Unit
			4	6	7 thru 18	22 thru 37		No.	Value	Unit			Min	Max	
3	V_{REF}	79	+15 V	-15 V	0000 0000 0000	1111 1111 1111 1111	None	2	E_{64}	V	$V_{REF} = E_{64}$ $I_{REF} = 2$ mA	03	9.90	10.1	V
T_A = -55°C	I_{ZS}	80	"	"	0000 0000 0000	1111 1111 1111 1111	K_1	19	I_{29}		$I_{ZS} = (I_{29})\ (4096)/(I_{83} - I_{29})$	03, 04	-3	3	LSB
	A_E	81	"	"	1111 1111 1111	0000 0000 0000 1111	"	21	E_{65}	V	$A_E = 0.1\ (E_{65} - E_{66})$	03	-0.44	0.44	%
			"	"	0000 0000 0000	1111 1111 1111 1111	"	"	E_{66}	"		04	-0.28	0.28	
	B_{POE}	82	"	"	0000 0000 0000	1111 1111 1111 1111	K_2, K_3	"	E_{67}	"	$B_{POE} = (-2.05)\ (E_{67})$	03	-17.6	17.6	LSB
												04	-11.2	11.2	
	B_{ZE}	84	"	"	1000 0000 0000	0111 1111 1111 1111	K_2	"	E_{69}	"	$B_{ZE} = (-2.05)\ (E_{69})$	"	-9.2	9.2	LSB
	LE_1	85	"	"	0001 0000 0000	1110 1111 1111 1111	None	"	E_{70}	"	For each input code N calculate the	"	-0.5	+0.5	"
		86	"	"	0010 0000 0000	1101 "	"	"	E_{71}	"	Corresponding linearity error in LSB.	"	"	"	"
		87	"	"	0011 0000 0000	1100 "	"	"	E_{72}	"		"	"	"	"
		88	"	"	0100 0000 0000	1011 "	"	"	E_{73}	"	$LE = 4.1((E_{65}-E_{66})(N/4095) + E_{66} - EA)$	"	"	"	"
		89	"	"	0101 0000 0000	1010 "	"	"	E_{74}	"		"	"	"	"
		90	"	"	0110 0000 0000	1001 "	"	"	E_{75}	"	where	"	"	"	"
		91	"	"	0111 0000 0000	1000 "	"	"	E_{76}	"	EA = measured value E_{70} through E_{92}	"	"	"	"
		92	"	"	1000 0000 0000	0111 "	"	"	E_{77}	"	N = DUT input digital code word in decimal form	"	"	"	"
		93	"	"	1001 0000 0000	0110 "	"	"	E_{78}	"	Thus for 12 bits N = (A1)(2 exp 11) + (A2)	"	"	"	"
		94	"	"	1010 0000 0000	0101 "	"	"	E_{79}	"	(2 exp 10)+ … +(A12)(2 exp 0)	"	"	"	"
		95	"	"	1011 0000 0000	0100 "	"	"	E_{80}	"	A1, A2, A12 are 0 or 1.	"	"	"	"
		96	"	"	1100 0000 0000	0011 "	"	"	E_{81}	"	E_{65} and E_{66} correspond to the error amplifier	"	"	"	"
		97	"	"	1101 0000 0000	0010 "	"	"	E_{82}	"	Outputs at full scale and zero scale	"	"	"	"
		98	"	"	1110 0000 0000	0001 "	"	"	E_{83}	"	respectively.	"	"	"	"
	LE_{15}	99	"	"	1111 0000 0000	0000 "	"	"	E_{84}	"		"	"	"	"
						A. Record the DUT code-word, (XXXX 0000 0000), with the most positive error. 2/						"	"	"	"
						B. Record the DUT code-word, (YYYY 0000 0000), with the most negative error. 2/						"	"	"	"
	LE_{16}	100	+15 V	-15 V	0000 0000 0001	1111 1111 1110 1111	None	21	E_{85}	V		03, 04	-0.5	0.5	LSB
		101	"	"	0000 0000 0010	1111 1111 1101 1111	"	"	E_{86}	"		"	"	"	"
		102	"	"	0000 0000 0100	1111 1111 1011 1111	"	"	E_{87}	"		"	"	"	"
	LE_{19}	103	"	"	0000 0000 1000	1111 1111 0111 1111	"	"	E_{88}	"		"	"	"	"
	LE_{20}	104	"	"	0000 0001 0000	1111 1110 1111 1111	"	"	E_{89}	"		"	"	"	"
		105	"	"	0000 0010 0000	1111 1101 1111 1111	"	"	E_{90}	"	$S = ((E_{65} - E_{66})/4095)$	"	"	"	"
		106	"	"	0000 0100 0000	1111 1011 1111 1111	"	"	E_{91}	"		"	"	"	"
	LE_{23}	107	"	"	0000 1000 0000	1111 0111 1111 1111	"	"	E_{92}	"		"	"	"	"
			"	"	A. Record, (0000 BBBB BBBB), the sum of the codewords from tests 100 – 107 with positive linearity errors.							"	"	"	"
			"	"	B. Record, (0000 CCCC CCCC), the sum of the codewords from tests 100 – 107 with negative linearity errors.							"	"	"	"
			"	"	Determine the sum of the recorded code-words obtained from tests 85 – 99 from tests 100 – 107 for positive errors.							"	"	"	"
			"	"	Measure and calculate linearity error for the new DUT code-word (XXXX BBBB BBBB). (See Table I, Note 9/)							"	"	"	"
	LE_{24}	108	"	"	XXXX BBBB BBBB XXXX BBBB BBBB 1111		None	"	E_{93}	"	$LE_{24} = 4.1(E_{66} + ((\text{on-bits}) \times S) - E_{93})$	"	"	"	"
			"	"	Determine the sum of the recorded code-words obtained from tests 85 – 99 from tests 100 – 107 for negative errors.							"	"	"	"
			"	"	Measure and calculate linearity error for the new DUT code-word (YYYY CCCC CCCC). (See Table I, Note 9/)							"	"	"	"
	LE_{25}	109	"	"	YYYY CCCC CCCC YYYY CCCC CCCC 1111		None	"	E_{94}	"	$LE_{25} = 4.1(E_{66} + ((\text{on-bits}) \times S) - E_{94})$	"			

See footnotes at end of table.

TABLE III. Group A inspection for device types 03and 04 – Continued.

Subgroup	Symbol	Test no.	Adapter pin numbers 1/				Energized relays	Measured pin			Equation 2/	Device Types	Limits		Unit
			4	6	7 thru 18	22 thru 37		No.	Value	Unit			Min	Max	
3	MCE	110	+15 V	-15 V	0111 1111 1111	1000 0000 0000 1111	None	21	E_{95}	V	For each set of major carry codes N and N + 1	03, 04	-1.0	1.0	LSB
T_A = -55°C			“	“	1000 0000 0000	0111 1111 1111 1111	“	“	E_{96}	“	Calculate the associated error in LSB’s as	“	“	“	“
		111	“	“	0011 1111 1111	1100 0000 0000 1111	“	“	E_{97}	“	Follows:	“	“	“	“
			“	“	0100 0000 0000	1011 1111 1111 1111	“	“	E_{98}	“		“	“	“	“
		112	“	“	0001 1111 1111	1110 0000 0000 1111	“	“	E_{99}	“	MCE = 4.1 (EA – EB)	“	“	“	“
			“	“	0010 0000 0000	1101 1111 1111 1111	“	“	E_{100}	“		“	“	“	“
		113	“	“	0000 1111 1111	1111 0000 0000 1111	“	“	E_{101}	“	where	“	“	“	“
			“	“	0001 0000 0000	1110 1111 1111 1111	“	“	E_{102}	“	EB = measured value from E_{95},E_{97},E_{99},etc.	“	“	“	“
		114	“	“	0000 0111 1111	1111 1000 0000 1111	“	“	E_{103}	“	EA = measured value from E_{96},E_{98},E_{100},etc.	“	“	“	“
			“	“	0000 1000 0000	1111 0111 1111 1111	“	“	E_{104}	“		“	“	“	“
		115	“	“	0000 0011 1111	1111 1100 0000 1111	“	“	E_{105}	“		“	“	“	“
			“	“	0000 0100 0000	1111 1011 1111 1111	“	“	E_{106}	“		“	“	“	“
		116	“	“	0000 0001 1111	1111 1110 0000 1111	“	“	E_{107}	“		“	“	“	“
			“	“	0000 0010 0000	1111 1101 1111 1111	“	“	E_{108}	“		“	“	“	“
		117	“	“	0000 0000 1111	1111 1111 0000 1111	“	“	E_{109}	“		“	“	“	“
			“	“	0000 0001 0000	1111 1110 1111 1111	“	“	E_{110}	“		“	“	“	“
		118	“	“	0000 0000 0111	1111 1111 1000 1111	“	“	E_{111}	“		“	“	“	“
			“	“	0000 0000 1000	1111 1111 0111 1111	“	“	E_{112}	“		“	“	“	“
		119	“	“	0000 0000 0011	1111 1111 1100 1111	“	“	E_{113}	“		“	“	“	“
			“	“	0000 0000 0100	1111 1111 1011 1111	“	“	E_{114}	“		“	“	“	“
		120	“	“	0000 0000 0001	1111 1111 1110 1111	“	“	E_{115}	“		“	“	“	“
			“	“	0000 0000 0010	1111 1111 1101 1111	“	“	E_{116}	“		“	“	“	“
		121	“	“	0000 0000 0000	1111 1111 1111 1111	“	“	E_{117}	“		“	“	“	“
			“	“	0000 0000 0001	1111 1111 1110 1111	“	“	E_{118}	“		“	“	“	“
4	I_{ZS}	122	“	“	0000 0000 0000	1111 1111 1111 1111	K_1	19	I_{30}		$I_{ZS} = (I_{30})\ (4096)/(I_{27} – I_{30})$	03, 04	-2	2	LSB
T_A = 25°C	A_E	123	“	“	1111 1111 1111	0000 0000 0000 1111	None	21	E_{119}	V	$A_E = 0.1\ (E_{119} – E_{120})$	“	-0.20	0.20	%
			“	“	0000 0000 0000	1111 1111 1111 1111		“	E_{120}	“					
	B_{POE}	124	“	“	0000 0000 0000	1111 1111 1111 1111	K_2, K_3	“	E_{121}	“	$B_{POE} = (-2.05)\ (E_{121})$	“	-8	8	LSB
	B_{PAE}	125	“	“	1111 1111 1111	0000 0000 0000 1111	K_2	“	E_{122}	“	$B_{PAE} = 0.05\ (E_{122})$	“	-0.20	0.20	%
	B_{ZE}	126	“	“	1000 0000 0000	0111 1111 1111 1111	K_2	“	E_{123}	“	$B_{ZE} = (-2.05)\ (E_{123})$	“	-6.0	6.0	LSB
	LE_1	127	“	“	0001 0000 0000	1110 1111 1111 1111	None	“	E_{124}	“	For each input code N calculate the	“	-0.5	+0.5	“
		128	“	“	0010 0000 0000	1101 “	“	“	E_{125}	“	Corresponding linearity error in LSB.	“	“	“	“
		129	“	“	0011 0000 0000	1100 “	“	“	E_{126}	“		“	“	“	“
		130	“	“	0100 0000 0000	1011 “	“	“	E_{127}	“	$LE = 4.1((E_{119}-E_{120})(N/4095) + E_{120} – EA)$	“	“	“	“
		131	“	“	0101 0000 0000	1010 “	“	“	E_{128}	“		“	“	“	“
		132	“	“	0110 0000 0000	1001 “	“	“	E_{129}	“	where	“	“	“	“
		133	“	“	0111 0000 0000	1000 ”	“	“	E_{130}	“	EA = measured value E_{124} through E_{146}	“	“	“	“
		134	“	“	1000 0000 0000	0111 ”	“	“	E_{131}	“	N = DUT input digital code word in decimal form	“	“	“	“
		135	“	“	1001 0000 0000	0110 ”	“	“	E_{132}	“	Thus for 12 bits N = (A1)(2 exp 11) + (A2)	“	“	“	“
		136	“	“	1010 0000 0000	0101 ”	“	“	E_{133}	“	(2 exp 10)+ … +(A12)(2 exp 0)	“	“	“	“
		137	“	“	1011 0000 0000	0100 ”	“	“	E_{134}	“	A1, A2, A12 are 0 or 1.	“	“	“	“
		138	“	“	1100 0000 0000	0011 ”	“	“	E_{135}	“	$E_{119}$and E_{120} correspond to the error amplifier	“	“	“	“
		139	“	“	1101 0000 0000	0010 ”	“	“	E_{136}	“	Outputs at full scale and zero scale	“	“	“	“
		140	“	“	1110 0000 0000	0001 ”	“	“	E_{137}	“	respectively.	“	“	“	“
	LE_{15}	141	“	“	1111 0000 0000	0000 ”	“	“	E_{138}	“		“	“	“	“
						A. Record the DUT code-word, (XXXX 0000 0000), with the most positive error. 2/						“	“	“	“
						B. Record the DUT code-word, (YYYY 0000 0000), with the most negative error. 2/						“	“	“	“

See footnotes at end of table.

TABLE III. Group A inspection for device types 03and 04 – Continued.

Subgroup	Symbol	Test no.	Adapter pin numbers 1/				Energized relays	Measured pin			Equation 2/	Device Types	Limits		Unit
			4	6	7 thru 18	22 thru 37		No.	Value	Unit			Min	Max	
4	LE_{16}	142	+15 V	-15 V	0000 0000 0001	1111 1111 1110 1111	None	21	E_{139}	V		03, 04	-0.5	0.5	LSB
T_A = 25°C		143	"	"	0000 0000 0010	1111 1111 1101 1111	"	"	E_{140}	"		"	"	"	"
		144	"	"	0000 0000 0100	1111 1111 1011 1111	"	"	E_{141}	"		"	"	"	"
	LE_{19}	145	"	"	0000 0000 1000	1111 1111 0111 1111	"	"	E_{142}	"		"	"	"	"
	LE_{20}	146	"	"	0000 0001 0000	1111 1110 1111 1111	"	"	E_{143}	"		"	"	"	"
		147	"	"	0000 0010 0000	1111 1101 1111 1111	"	"	E_{144}	"	$S = ((E_{119} – E_{120})/4095)$	"	"	"	"
		148	"	"	0000 0100 0000	1111 1011 1111 1111	"	"	E_{145}	"		"	"	"	"
	LE_{23}	149	"	"	0000 1000 0000	1111 0111 1111 1111	"	"	E_{146}	"		"	"	"	"
			"	"	A. Record, (0000 BBBB BBBB), the sum of the codewords from tests 142 – 149 with positive linearity errors.							"	"	"	"
			"	"	B. Record, (0000 CCCC CCCC), the sum of the codewords from tests 142 – 149 with negative linearity errors.							"	"	"	"
			"	"	Determine the sum of the recorded code-words obtained from tests 127 – 141 from tests 142 – 149 for positive errors.							"	"	"	"
			"	"	Measure and calculate linearity error for the new DUT code-word (XXXX BBBB BBBB). (See Table I, Note 9/)							"	"	"	"
	LE_{24}	150	"	"	XXXX BBBB BBBB XXXX BBBB BBBB 1111		None	21	E_{147}	V	$LE_{24} = 4.1(E_{120} + ((\text{on-bits}) \times S) – E_{147})$	"	"	"	"
			"	"	Determine the sum of the recorded code-words obtained from tests 127 – 141 from tests 142 – 149 for negative errors.							"	"	"	"
			"	"	Measure and calculate linearity error for the new DUT code-word (YYYY CCCC CCCC). (See Table I, Note 9/)							"	"	"	"
	LE_{25}	151	"	"	YYYY CCCC CCCC YYYY CCCC CCCC 1111		None	21	E_{148}	V	$LE_{25} = 4.1(E_{120} + ((\text{on-bits}) \times S) – E_{148})$	"			
	MCE	152	"	"	0111 1111 1111	1000 0000 0000 1111	None	21	E_{149}	V	For each set of major carry codes N and N + 1	"	-1.0	1.0	"
			"	"	1000 0000 0000	0111 1111 1111 1111	"	"	E_{150}	"	Calculate the associated error in LSB's as	"	"	"	"
		153	"	"	0011 1111 1111	1100 0000 0000 1111	"	"	E_{151}	"	Follows:	"	"	"	"
			"	"	0100 0000 0000	1011 1111 1111 1111	"	"	E_{152}	"		"	"	"	"
		154	"	"	0001 1111 1111	1110 0000 0000 1111	"	"	E_{153}	"	MCE = 4.1 (EA – EB)	"	"	"	"
			"	"	0010 0000 0000	1101 1111 1111 1111	"	"	E_{154}	"		"	"	"	"
		155	"	"	0000 1111 1111	1111 0000 0000 1111	"	"	E_{155}	"	where	"	"	"	"
			"	"	0001 0000 0000	1110 1111 1111 1111	"	"	E_{156}	"	EB = measured value from E_{149},E_{151},E_{153},etc.	"	"	"	"
		156	"	"	0000 0111 1111	1111 1000 0000 1111	"	"	E_{157}	"	EA = measured value from E_{150},E_{152},E_{154},etc.	"	"	"	"
			"	"	0000 1000 0000	1111 0111 1111 1111	"	"	E_{158}	"		"	"	"	"
		157	"	"	0000 0011 1111	1111 1100 0000 1111	"	"	E_{159}	"		"	"	"	"
			"	"	0000 0100 0000	1111 1011 1111 1111	"	"	E_{160}	"		"	"	"	"
		158	"	"	0000 0001 1111	1111 1110 0000 1111	"	"	E_{161}	"		"	"	"	"
			"	"	0000 0010 0000	1111 1101 1111 1111	"	"	E_{162}	"		"	"	"	"
		159	"	"	0000 0000 1111	1111 1111 0000 1111	"	"	E_{163}	"		"	"	"	"
			"	"	0000 0001 0000	1111 1110 1111 1111	"	"	E_{164}	"		"	"	"	"
		160	"	"	0000 0000 0111	1111 1111 1000 1111	"	"	E_{165}	"		"	"	"	"
			"	"	0000 0000 1000	1111 1111 0111 1111	"	"	E_{166}	"		"	"	"	"
		161	"	"	0000 0000 0011	1111 1111 1100 1111	"	"	E_{167}	"		"	"	"	"
			"	"	0000 0000 0100	1111 1111 1011 1111	"	"	E_{168}	"		"	"	"	"
		162	"	"	0000 0000 0001	1111 1111 1110 1111	"	"	E_{169}	"		"	"	"	"
			"	"	0000 0000 0010	1111 1111 1101 1111	"	"	E_{170}	"		"	"	"	"
		163	"	"	0000 0000 0000	1111 1111 1111 1111	"	"	E_{171}	"		"	"	"	"
			"	"	0000 0000 0001	1111 1111 1110 1111	"	"	E_{172}	"		"	"	"	"

See footnotes at end of table.

TABLE III. Group A inspection for device types 03and 04 – Continued.

Subgroup	Symbol	Test no.	Adapter pin numbers 1/				Energized relays	Measured pin			Equation 2/	Device Types	Limits		Unit
			4	6	7 thru 18	22 thru 37		No.	Value	Unit			Min	Max	
5 T_A = 125°C	I_{CC}	164	15 V	-15 V	1111 1111 1111	1111 1111 1111 1111	None	4	I_{30}	mA	$I_{CC} = I_{30}$ (Digital 1 = 2.4 V)	03	1	5	mA
	I_{EE}	165	"	"	0000 0000 0000	1111 1111 1111 1111	"	6	I_{31}	mA	$I_{EE} = I_{31}$ (Digital 0 = 0.8 V)	03, 04	-18	-5	mA
	I_{IL}	166	"	"	0000 0000 0000	1111 1111 1111 1111		7	I_{32}	µA	$I_{IL} = I_{32}$ (Digital 0 = 0 V)	03 04	-100 5	100 100	µA "
		167	"	"	"	"	"	8	I_{33}	"	$I_{IL} = I_{33}$ "	03 04	-100 5	100 100	" "
		168	"	"	"	"	"	9	I_{34}	"	$I_{IL} = I_{34}$ "	03 04	-100 5	100 100	" "
		169	"	"	"	"	"	10	I_{35}	"	$I_{IL} = I_{35}$ "	03 04	-100 5	100 100	" "
		170	"	"	"	"	"	11	I_{36}	"	$I_{IL} = I_{36}$ "	03 04	-100 5	100 100	" "
		171	"	"	"	"	"	12	I_{37}	"	$I_{IL} = I_{37}$ "	03 04	-100 5	100 100	" "
		172	"	"	"	"	"	13	I_{38}	"	$I_{IL} = I_{38}$ "	03 04	-100 5	100 100	" "
		173	"	"	"	"	"	14	I_{39}	"	$I_{IL} = I_{39}$ "	03 04	-100 5	100 100	" "
		174	"	"	"	"	"	15	I_{40}	"	$I_{IL} = I_{40}$ "	03 04	-100 5	100 100	" "
		175	"	"	"	"	"	16	I_{41}	"	$I_{IL} = I_{41}$ "	03 04	-100 5	100 100	" "
		176	"	"	"	"	"	17	I_{42}	"	$I_{IL} = I_{42}$ "	03 04	-100 5	100 100	" "
		177	"	"	"	"	"	18	I_{43}	"	$I_{IL} = I_{43}$ "	03 04	-100 5	100 100	" "
	I_{IH}	178	"	"	1111 1111 1111	1111 1111 1111 1111	"	7	I_{44}	"	$I_{IH} = I_{44}$ (Digital 1 = 5.5 V)	03 04	-300 145	300 300	" "
		179	"	"	"	"	"	8	I_{45}	"	$I_{IH} = I_{45}$ "	03 04	-300 145	300 300	" "
		180	"	"	"	"	"	9	I_{46}	"	$I_{IH} = I_{46}$ "	03 04	-300 145	300 300	" "
		181	"	"	"	"	"	10	I_{47}	"	$I_{IH} = I_{47}$ "	03 04	-300 145	300 300	" "
		182	"	"	"	"	"	11	I_{48}	"	$I_{IH} = I_{48}$ "	03 04	-300 145	300 300	" "
		183	"	"	"	"	"	12	I_{49}	"	$I_{IH} = I_{49}$ "	03 04	-300 145	300 300	" "
		184	"	"	"	"	"	13	I_{50}	"	$I_{IH} = I_{50}$ "	03 04	-300 145	300 300	" "
		185	"	"	"	"	"	14	I_{51}	"	$I_{IH} = I_{51}$ "	03 04	-300 145	300 300	" "
		186	"	"	"	"	"	15	I_{52}	"	$I_{IH} = I_{52}$ "	03 04	-300 145	300 300	" "
		187	"	"	"		"	16	I_{53}	"	$I_{IH} = I_{53}$ "	03 04	-300 145	300 300	" "
		188	"	"	"		"	17	I_{54}	"	$I_{IH} = I_{54}$ "	03 04	-300 145	300 300	" "
		189	"	"	"	"	"	18	I_{55}	"	$I_{IH} = I_{55}$ "	03 04	-300 145	300 300	" "

See footnotes at end of table.

TABLE III. Group A inspection for device types 03and 04 – Continued.

Subgroup	Symbol	Test no.	Adapter pin numbers 1/				Energized relays	Measured pin			Equation 2/	Device Types	Limits		Unit
			4	6	7 thru 18	22 thru 37		No.	Value	Unit			Min	Max	
5 T_A = 25°C	I_{FS}	190	+15 V	-15 V	1111 1111 1111	1111 1111 1111 1111	K_1	19	I_{56}	mA	$I_{FS} = I_{56}$	03, 04	-2.7	-1.6	mA
	$+P_{SS}$	191 192 193	+13.5 V +15 V +16.5 V	" " "	1111 1111 1111 " "	0000 0000 0000 1111 " "	None " "	21 " "	E_{173} E_{174} E_{175}	V " "	$+P_{SS} = 0.41\ (E_{174} - E_{173})$ $+P_{SS} = 0.41\ (E_{174} - E_{175})$	03 " "	-0.08 " "	0.08 " "	LSB/%PS " "
	$-P_{SS}$	194 195 196	+15 V " "	-13.5 V -15 V -16.5 V	" " "	" " "	" " "	" " "	E_{176} E_{177} E_{178}	" " "	$-P_{SS} = 0.41\ (E_{177} - E_{176})$ $-P_{SS} = 0.41\ (E_{177} - E_{178})$	03, 04 " "	-0.2 " "	0.2 " "	" " "
6 T_A = -55°C	I_{CC}	197	+15 V	-15 V	1111 1111 1111	1111 1111 1111 1111	"	4	I_{57}	mA	$I_{CC} = I_{57}$ (Digital 1 = 2.4 V)	03	1	5	mA
	I_{EE}	198	"	"	0000 0000 0000	"	"	6	I_{58}	mA	$I_{EE} = I_{58}$ (Digital 0 = 0.8 V)	03, 04	-18	-5	mA
	I_{IL}	199	"	"	"	"		7	I_{59}	µA	$I_{IL} = I_{59}$ (Digital 0 = 0 V)	03 04	-100 5	100 100	µA "
		200	"	"	"	"	"	8	I_{60}	"	$I_{IL} = I_{60}$ "	03 04	-100 5	100 100	" "
		201	"	"	"	"	"	9	I_{61}	"	$I_{IL} = I_{61}$ "	03 04	-100 5	100 100	" "
		202	"	"	"	"	"	10	I_{62}	"	$I_{IL} = I_{62}$ "	03 04	-100 5	100 100	" "
		203	"	"	"	"	"	11	I_{63}	"	$I_{IL} = I_{63}$ "	03 04	-100 5	100 100	" "
		204	"	"	"	"	"	12	I_{64}	"	$I_{IL} = I_{64}$ "	03 04	-100 5	100 100	" "
		205	"	"	"	"	"	13	I_{65}	"	$I_{IL} = I_{65}$ "	03 04	-100 5	100 100	" "
		206	"	"	"	"	"	14	I_{66}	"	$I_{IL} = I_{66}$ "	03 04	-100 5	100 100	" "
		207	"	"	"	"	"	15	I_{67}	"	$I_{IL} = I_{67}$ "	03 04	-100 5	100 100	" "
		208	"	"	"	"	"	16	I_{68}	"	$I_{IL} = I_{68}$ "	03 04	-100 5	100 100	" "
		209	"	"	"	"	"	17	I_{69}	"	$I_{IL} = I_{69}$ "	03 04	-100 5	100 100	" "
		210	"	"	"	"	"	18	I_{70}	"	$I_{IL} = I_{70}$ "	03 04	-100 5	100 100	" "
	I_{IH}	211	"	"	1111 1111 1111	"	"	7	I_{71}	"	$I_{IH} = I_{71}$ (Digital 1 = 5.5 V)	03 04	-300 145	300 300	" "
		212	"	"	"	"	"	8	I_{72}	"	$I_{IH} = I_{72}$ "	03 04	-300 145	300 300	" "
		213	"	"	"	"	"	9	I_{73}	"	$I_{IH} = I_{73}$ "	03 04	-300 145	300 300	" "
		214	"	"	"	"	"	10	I_{74}	"	$I_{IH} = I_{74}$ "	03 04	-300 145	300 300	" "
		215	"	"	"	"	"	11	I_{75}	"	$I_{IH} = I_{75}$ "	03 04	-300 145	300 300	" "
		216	"	"	"	"	"	12	I_{76}	"	$I_{IH} = I_{76}$ "	03 04	-300 145	300 300	" "
		217	"	"	"	"	"	13	I_{77}	"	$I_{IH} = I_{77}$ "	03 04	-300 145	300 300	" "
		218	"	"	"	"	"	14	I_{78}	"	$I_{IH} = I_{78}$ "	03 04	-300 145	300 300	" "
		219	"	"	"	"	"	15	I_{79}	"	$I_{IH} = I_{79}$ "	03 04	-300 145	300 300	" "
		220	"	"	"		"	16	I_{80}	"	$I_{IH} = I_{80}$ "	03 04	-300 145	300 300	" "
		221	"	"	"		"	17	I_{81}	"	$I_{IH} = I_{81}$ "	03 04	-300 145	300 300	" "
		222	"	"	"	"	"	18	I_{82}	"	$I_{IH} = I_{82}$ "	03 04	-300 145	300 300	" "

See footnotes at end of table.

TABLE III. Group A inspection for device types 03and 04 – Continued.

Subgroup	Symbol	Test no.	Adapter pin numbers 1/				Energized relays	Measured pin			Equation 2/	Device Types	Limits		Unit
			4	6	7 thru 18	22 thru 37		No.	Value	Unit			Min	Max	
6 T_A = -55°C	I_{FS}	223	+15 V	-15 V	1111 1111 1111	1111 1111 1111 1111	K_1	19	I_{83}	mA	$I_{FS} = I_{83}$	03, 04	-2.7	-1.6	mA
	$+P_{SS}$	224 225 226	+13.5 V +15 V +16.5 V	“ “ “	1111 1111 1111 “ “	0000 0000 0000 1111 “ “	None “ “	21 “ “	E_{179} E_{180} E_{181}	V “ “	$+P_{SS} = 0.41\ (E_{180} – E_{179})$ $+P_{SS} = 0.41\ (E_{180} – E_{179})$	03 “ “	-0.08 “ “	0.08 “ “	LSB/%PS “ “
	$-P_{SS}$	227 228 229	+15 V “ “	-13.5 V -15 V -16.5 V	“ “ “	“ “ “	“ “ “	“ “ “	E_{182} E_{183} E_{184}	“ “ “	$-P_{SS} = 0.41\ (E_{183} – E_{182})$ $-P_{SS} = 0.41\ (E_{183} – E_{184})$	03, 04 “ “	-0.2 “ “	0.2 “ “	“ “ “
7 T_A = 25°C	LE		+15 V “ “ “ “ “ “ “ “	-15 V “ “ “ “ “ “ “ “	0000 0000 0001 0000 0000 0010 0000 0000 0011 1111 1111 1100 1111 1111 1101 1111 1111 1110 This subgroup checks all digital input codes, Except zero code (VOS) and fullscale code (VFS) which were determined in Test No. 123.	1111 1111 1110 1111 1111 1111 1101 1111 1111 1111 1100 1111 0000 0000 0011 1111 0000 0000 0010 1111 0000 0000 0001 1111	“ “ “ “ “ “ “ “ “	“ “ “ “ “ “ “ “ “	E_{185} E_{186} E_{187} E….. E….. E_{4278} E_{4279} E_{4280}	“ “ “ “ “ “ “ “ “	For each input code N calculate the Corresponding linearity error in LSB. $LE = 4.1((E_{119}-E_{120})(N/4095) + E_{120} – EA)$ Where EA = measured value E_{185} through E_{4280} N = DUT input digital code word in decimal form. Thus for 12 bits N = (A1)(2 exp 11) + (A2) (2 exp 10)+ … +(A12)(2 exp 0) A1, A2, … A12 are 0 or 1. E_{119} and E_{120} correspond to the error amplifier Outputs at full scale and zero scale Respectively.	“ “ “ “ “ “ “ “ “ “ “ “ “ “ “			
		230 231									Worst positive error Worst positive code Worst negative error Worst negative code	“ “ “ “	0 - -0.5 -	0.5 --- 0 ---	LSB OCT LSB OCT
8 T_A = 125°C	LE	232 233	Same tests, terminal conditions and limits as in subgroup 7, tests 232 thru 233 except T_A = 125°C. V_{OS} and V_{FS} are the values determined in subgroup 2.									“ “ “ “	0 - -0.5 -	0.5 - 0 -	LSB OCT LSB OCT
	dI_{ZS} /dt	234	Calculate $dI_{ZS}/dt = (I_{ZS}$ at 125°C – I_{ZS} at 25°C)/100°C from tests 37 and 122 respectively.									“	-0.01	0.01	LSB/°C
	dA_E /dt	235	Calculate $dA_E/dt = (A_E$ at 125°C – A_E at 25°C)/100°C from tests 38 and 123 respectively.									03 04	-30 -10	30 10	PPM/°C PPM/°C
	dB_{POE} /dt	236	Calculate $dB_{POE}/dt = (B_{POE}$ at 125°C – B_{POE} at 25°C)/100°C from tests 39 and 124 respectively.									03 04	-0.12 -0.04	0.12 0.04	LSB/°C “
	dB_{ZE} /dt	237	Calculate $dB_{ZE}/dt = (B_{ZE}$ at 125°C – B_{ZE} at 25°C)/100°C from tests 41 and 126 respectively.									03, 04	-0.04	0.04	“

See footnotes at end of table.

TABLE III. Group A inspection for device types 03and 04 – Continued.

Subgroup	Symbol	Test no.	Adapter pin numbers 1/				Energized relays	Measured pin			Equation 2/	Device Types	Limits		Unit
			4	6	7 thru 18	22 thru 37		No.	Value	Unit			Min	Max	
8 T_A = 125°C	LE	238 239	Same tests, terminal conditions and limits as in subgroup 7, tests 238 thru 239 except T_A = -55°C. V_{OS} and V_{FS} are the values determined in subgroup 3.									03, 04 “ “ “	0 - -0.5 -	0.5 - 0 -	LSB OCT LSB OCT
	dI_{ZS} /dt	240	Calculate dI_{ZS}/dt = (I_{ZS} at -55°C – I_{ZS} at +25°C)/80°C from tests 80 and 122 respectively.									“	-0.01	0.01	LSB/°C
	dA_E /dt	241	Calculate dA_E/dt = (A_E at -55°C – A_E at +25°C)/125°C from tests 81 and 123 respectively.									03 04	-30 -10	30 10	PPM/°C PPM/°C
	dB_{POE} /dt	242	Calculate dB_{POE} /dt = (B_{POE} at -55°C – B_{POE} at +25°C)/80°C from tests 82 and 124 respectively.									03 04	-0.12 -0.04	0.12 0.04	LSB/°C “
	dB_{ZE} /dt	243	Calculate dB_{ZE} /dt = (B_{ZE} at -55°C – B_{ZE} at 25°C)/80°C from tests 84 and 126 respectively.									03, 04	-0.04	0.04	“
12 T_A = 25°C	t_{SLH}	244	All digital inputs switched simultaneously from logic low to logic high. For each device type output settling is to within ½ LSB of the rated accuracy. See figure 3.				None	6	t_1		$t_{SLH} = t_1$	03 04	---- ----	400 600	ns “
	t_{SHL}	245	All digital inputs switched simultaneously from logic high to logic low. For each device type output settling is to within ½ LSB of the rated accuracy. See figure 3.				“	6	t_2		$t_{SHL} = t_2$	03 04	---- ----	400 600	ns “
	Ri	256	+15 V	-15 V	See figure 5		“	6 5	I_{84} I_{85}	mA	Ri = 10/I_{84} V_{REF} = +10 V Ri = 10/I_{85}	03 04	15 15	25 25	kΩ kΩ
	No	257	+15 V	-15 V	All bits off All bits on See figure 6.		“ “	9 9	e1 e2	mVrms	No = Sqr(e1 exp2-e2 exp2)	03 04	---- ----	80 60	mVrms mVrms

1/ +15 V is not required for device type 04.

2/ The equations take into account the error amplifier gain of 100 V/V and other circuit contacts so that the calculated value is in table I units.

4.4.1 Group A inspection. Group A inspection shall be in accordance with table III of MIL-PRF-38535 and as follows:

a. Tests shall be as specified in table II herein.

b. Subgroups 9, 10, and 11 shall be omitted.

c. Subgroup 12 shall be added to group A inspection for all classes and it shall consist of the conditions and limits as specified in table III. The sample size series number shall be 15 for all classes (accept on 0).

4.4.2 Group B inspection. Group B inspection shall be in accordance with table II of MIL-PRF-38535.

4.4.3 Group C inspection. Group C inspection shall be in accordance with table IV of MIL-PRF-38535 and as follows:

a. End point electrical parameters shall be as specified in table II herein.

b. The steady-state life test duration, test condition, and test temperature, or approved alternatives shall be as specified in the device manufacturer's QM plan in accordance with MIL-PRF-38535. The burn-in test circuit shall be maintained under document control by the device manufacturer's Technology Review Board (TRB) in accordance with MIL-PRF-38535 and shall be made available to the acquiring or preparing activity upon request. The test circuit shall specify the inputs, outputs, biases, and power dissipation, as applicable, in accordance with the intent specified in test method 1005 of MIL-STD-883.

4.4.4 Group D inspection. Group D inspection shall be in accordance with table V of MIL-PRF-38535. End point electrical parameters shall be as specified in table II herein.

Table IV. Group C end-point electrical parameters. T_A = 25°C

Device type	Test no.	Symbol	Limits		Delta	Unit
			Min	Max		
01, 02, 03, 04	130	I_{ZS1}	-2	2	±1	LSB
01, 03, 04	132	A_{E1}	-0.20	0.20	±0.05	%
02			-0.16	1.16	±0.04	%
01, 03, 04	128	B_{POE}	-8	8	±2	LSB
02			-6.5	6.5	±2	LSB
01, 02	129	B_{ZE}	-6.5	6.5	±2	LSB
03, 04			-6.0	6.0	±2	LSB

4.5 Methods of inspection. Methods of inspection shall be specified and as follows.

4.5.1 Voltage and current. All voltage values given are referenced to the microcircuit ground terminals. Currents given are conventional current and positive when flowing into the referenced terminal.

5. PACKAGING

5.1 Packaging requirements. For acquisition purposes, the packaging requirements shall be as specified in the contract or order (see 6.2). When actual packaging of materiel is to be performed by DoD personnel, these personnel need to contact the responsible packaging activity to ascertain requisite packaging requirements. Packaging requirements are maintained by the Inventory Control Point's packaging activity within the Military Department of Defense Agency, or within the Military Department's System Command. Packaging data retrieval is available from the managing Military Department's or Defense Agency's automated packaging files, CD-ROM products, or by contacting the responsible packaging activity.

6. NOTES

6.1 Intended use. Microcircuits conforming to this specification are intended for original equipment design applications and logistic support of existing equipment.

6.2 Acquisition requirements. Acquisition documents should specify the following:

a. Title, number, and date of the specification.

b. PIN and compliance identifier, if applicable (see 1.2).

c. Requirements for delivery of one copy of the conformance inspection data pertinent to the device inspection lot to be supplied with each shipment by the device manufacturer, if applicable.

d. Requirements for certificate of compliance, if applicable.

e. Requirements for notification of change of product or process to acquiring activity in addition to notification of the qualifying activity, if applicable.

f. Requirements for failure analysis (including required test condition of MIL-STD-883, method 5003), corrective action and reporting of results, if applicable.

g. Requirements for product assurance options.

h. Requirements for special carriers, lead lengths, or lead forming, if applicable. These requirements should not affect the part number. Unless otherwise specified, these requirements will not apply to direct purchase by or direct shipment to the Government.

i. Requirements for "JAN" marking.

j. Packaging requirements (see 5.1).

6.3 Superseding information. The requirements of MIL-M-38510 have been superseded to take advantage of the available Qualified Manufacturer Listing (QML) system provided by MIL-PRF-38535. Previous references to MIL-M-38510 in this document have been replaced by appropriate references to MIL-PRF-38535. All technical requirements now consist of this specification and MIL-PRF-38535. The MIL-M-38510 specification sheet number and PIN have been retained to avoid adversely impacting existing government logistics systems and contractor's parts lists.

6.4 Qualification. With respect to products requiring qualification, awards will be made only for products which are, at the time of award of contract, qualified for inclusion in Qualified Manufacturers List QML-38535 whether or not such products have actually been so listed by that date. The attention of the contractors is called to these requirements, and manufacturers are urged to arrange to have the products that they propose to offer to the Federal Government tested for qualification in order that they may be eligible to be awarded contracts or purchase orders for the products covered by this specification. Information pertaining to qualification of products may be obtained from DSCC-VQ, 3990 E. Broad Street, Columbus, Ohio 43123-1199.

6.5 Abbreviations, symbols, and definitions. The abbreviations, symbols, and definitions used herein are defined in MIL-PRF-38535, MIL-HDBK-1331, and as follows:.

Bipolar mode:	The D/A converter operation mode that provides both positive and negative output voltage or currents in response to an offset binary input code.
Bipolar gain:	The ratio of the output voltage change to the input code change in the bipolar mode. In this specification, it is measured as the output voltage change between the input codes of zero and full-scale.
Bipolar gain error (B_{PAE}):	The difference between the actual static gain and the ideal static gain in the bipolar mode. It is measured between zero and full-scale and therefore expressed as a percent of full-scale range.
Bipolar offset error (B_{POE}):	The difference between the actual and the ideal output voltage with the device operating in the bipolar mode and the digital inputs at zero. It is expressed in LSB units.
Bipolar offset drift (dB_{POE}/dt):	The change of the bipolar offset with temperature with the device operating in the bipolar voltage output mode. It is expressed in LSB/°C.
Bipolar zero error (B_{ZE}):	The difference between the actual and the ideal (0 volts) output with the device operating in the bipolar mode and with the input digital code at 1000 0000 0000. It is expressed in LSB units.
Bipolar zero drift (dB_{ZE}/dt):	The change of the bipolar zero error with temperature with the device operating in the bipolar voltage output mode. It is expressed in LSB/°C.
Differential linearity error:	The difference between the actual separation of two adjacent output levels and the ideal separation of one LSB. It is expressed in LSB.
Full-scale current (I_{FS}):	The total current output of the device with all digital inputs at logic 1. It is expressed in mA.
Full-scale output voltage range (V_{FSR}):	The output voltage change between the input codes of all zeros to all ones plus the voltage equivalent to one additional LSB.
Gain:	The ratio of the output voltage change to an input code change with the device operating in the unipolar mode. In this specification it is measured between the codes of zero to full-scale.
Gain drift:	The change of gain with temperature. It is expressed in PPM/°C.
Gain error:	The difference between the actual static gain and the ideal static gain. It is expressed as a percent of the ideal.
Least significant bit (LSB):	That bit of a digital code word that causes the least change to the output level. When the LSB changes state, the ideal output level changes by the value of the full-scale range divided by 4096.

Major carry (MC):	A major carry (transition) is the output level change corresponding to the input transition between the digital code word defined by turning one bit on and all other bits off and the preceding adjacent digital code word. There are “N” such transitions for an N-bit converter.
Major carry error (MCE):	The differential linearity error between the output levels corresponding to the digital code word defined by turning one bit on and all other bits off and the preceding adjacent digital code word. It is expressed in LSB.
Monotonicity:	A DAC transfer function is monotonic if the ratio of the incremental change in the input does not change sign over the entire full-scale output range.
Most significant bit (MSB):	That bit of the digital code word that causes the most change to the output level. When the MSB changes state, the output level changes by one-half of the full-scale output range.
Offset:	The output voltage for an input code of all zeros.
Offset binary code:	The natural binary code representing the full-scale range but offset by one-half of the full-scale range. Offset binary code represents analog values between minus full-scale at all zeros, to plus full-scale for all ones, with the MSB turned on at analog zero.
Output compliance voltage range:	The range of output voltages over which a current output DAC can operate within a specified error band.
Power supply sensitivity at full-scale (P_{SS}):	The change in the full-scale output level with a change in the power supply voltage. It is generally expressed in mV/%.
Resolution:	The smallest ideal increment between two adjacent output levels over the full-scale range of the converter.
Settling time:	The elapsed time from the application of a full-scale step input to the DAC to the time when the output has entered and remained within a ½ LSB error band around its final value.
End-point linearity error:	The difference between the actual output level and the ideal output level for the same digital code word input after any rotation or translation to make the actual and the ideal zero and full-scale end-points coincide.
Unipolar mode:	The converter operation mode that includes output voltages or currents of one polarity only.
Zero scale current (I_{ZS}):	The output current with the device operating in the unipolar current output mode and with the digital inputs at zero. It is expressed in LSB.

6.6 Logistic support. Lead materials and finishes (see 3.4) are interchangeable. Unless otherwise specified, microcircuits acquired for Government logistic support will be acquired to device class B (see 1.2.2), lead material and finish A (see 3.4). Longer length leads and lead forming should not affect the part number.

6.7 Substitutability. The cross-reference information below is presented for the convenience of users. Microcircuits covered by this specification will functionally replace the listed generic-industry type. Generic-industry microcircuit types may not have equivalent operational performance characteristics across military temperature ranges or reliability factors equivalent to MIL-M-38510 device types and may have slight physical variations in relation to case size. The presence of this information should not be deemed as permitting substitution of generic-industry types for MIL-M-38510 types or as a waiver of any of the provisions of MIL-PRF-38535.

Military device type	Generic-industry type
01	562
02	563
03	565
04	566

6.8 Changes from previous issue. Marginal notations are not used in this revision to identify changes with respect to the previous issue, due to the extensiveness of the changes.

Custodians:
Army – CR
Navy - EC
Air Force - 11
NASA – NA
DLA – CC

Preparing activity:
DLA - CC

Project 5962-2052

Review activities:
Army – MI, SM
Navy – AS, CG, MC, SH, TD
Air Force – 03, 19, 99

NOTE: The activities listed above were interested in this document as of the date of this document. Since organizations and responsibilities can change, you should verify the currency of the information above using the ASSIST Online database at www.dodssp.daps.mil.