MIL-M-38510/11D
3 March 2005
SUPERSEDING
MIL-M-38510/11C
19 May 1978

MILITARY SPECIFICATION

MICROCIRCUITS, DIGITAL, TTL, ARITHMETIC LOGIC UNITS/ FUNCTION GENERATORS, MONOLITHIC SILICON

Inactive for new design after 6 September 1996.

This specification is approved for use by all Departments and Agencies of the Department of Defense.

The requirements for acquiring the product herein shall consist of this specification sheet and MIL-PRF 38535

1. SCOPE

1.1 Scope. This specification covers the detail requirements for monolithic, silicon, TTL, arithmetic logic units/ function generators. Two product assurance classes and a choice of case outlines and lead finishes are provided for each type and are reflected in the complete part number. For this product, the requirements of MIL-M-38510 have been superseded by MIL-PRF-38535, (see 6.4).

1.2 Part or Identifying Number (PIN). The PIN is in accordance with MIL-PRF-38535, and as specified herein.

1.2.1 Device types. The device types are as follows:

Device type	Circuit
01	Arithmetic logic unit/function generator
02	Look-ahead carry generator

1.2.2 Device class. The device class is the product assurance level as defined in MIL-PRF-38535.

1.2.3 Case outlines. The case outlines are as designated in MIL-STD-1835 and as follows:

Outline letter	Descriptive designator	Terminals	Package style
E	GDIP1-T16 or CDIP2-T16	16	Flat pack
F	GDFP2-F16 or CDFP3-F16	16	Flat pack
J	GDIP1-T24 or CDIP2-T24	24	Dual-in-line
K	GDFP2-F24 or CDFP3-F24	24	Flat pack
L	F-7 (24-lead, 3/8" x 1/2", flat pack) 1/		
Z	GDFP7-F24 or CDFP8-F24	24	Flat pack

1/ Case outline L (F-7) was removed from MIL-M-38510 in 1981.

Comments, suggestions, or questions on this document should be addressed to: Commander, Defense Supply Center Columbus, ATTN: DSCC-VAS, P. O. Box 3990, Columbus, OH 43218-3990, or emailed to bipolar@dscc.dla.mil. Since contact information can change, you may want to verify the currency of this address information using the ASSIST Online database at http://assist.daps.dla.mil.

AMSC N/A FSC 5962

1.3 Absolute maximum ratings.

Supply voltage range ..... -0.5 V dc to +7.0 V dc
Input voltage range ..... -1.5 V dc at -12 mA to +5.5 V dc
Storage temperature range ..... -65°C to +150°C
Maximum power dissipation, (P_D) 1/ ..... 795 mW dc
Lead temperature (soldering 10 seconds) ..... 300°C
Thermal resistance, junction-to-case (θ_{JC})..... (See MIL-STD-1835)
Junction temperature (T_J) 2/..... 175°C

1.4 Recommended operating conditions.

Supply voltage ..... 4.5 V dc minimum to 5.5 V dc maximum
Minimum high level input voltage ..... 2.0 V dc
Maximum low level input voltage ..... 0.8 V dc
Normalized fanout (each output)
Logical low level 3/ ..... 10 maximum
Logical high level 3/ ..... 20 maximum
Case operating temperature range (T_C) ..... -55°C to 125°C

2.0 APPLICABLE DOCUMENT

2.1 General. The documents listed in this section are specified in sections 3, 4, or 5 of this specification. This section does not include documents cited in other sections of this specification or recommended for additional information or as examples. While every effort has been made to ensure the completeness of this list, document users are cautioned that they must meet all specified requirements of documents cited in sections 3, 4, or 5 of this specification, whether or not they are listed.

2.2 Government documents.

2.2.1 Specifications and standards. The following specifications and standards form a part of this specification to the extent specified herein. Unless otherwise specified, the issues of these documents are those cited in the solicitation or contract.

DEPARTMENT OF DEFENSE SPECIFICATIONS

MIL-PRF-38535 - Integrated Circuits (Microcircuits) Manufacturing, General Specification for.

DEPARTMENT OF DEFENSE STANDARDS

MIL-STD-883 - Test Method Standard for Microelectronics.
MIL-STD-1835 - Interface Standard Electronic Component Case Outlines

(Copies of these documents are available online at http://assist.daps.dla.mil/quicksearch/ or http://assist.daps.dla.mil or from the Standardization Document Order Desk, 700 Robbins Avenue, Building 4D, Philadelphia, PA 19111-5094.)

2.3 Order of precedence. In the event of a conflict between the text of this specification and the references cited herein, the text of this document takes precedence. Nothing in this document, however, supersedes applicable laws and regulations unless a specific exemption has been obtained.

1/ Must withstand the added P_D due to short circuit condition (e.g. I_{OS}).
2/ Maximum junction temperature should not be exceeded except in accordance with allowable short duration burn-in screening condition in accordance with MIL-PRF-38535.
3/ A fanout of 20 normalized loads is provided to facilitate connection of unused inputs to used inputs.

3. REQUIREMENTS

3.1 Qualification. Microcircuits furnished under this specification shall be products that are manufactured by a manufacturer authorized by the qualifying activity for listing on the applicable qualified manufacturers list before contract award (see 4.3 and 6.3).

3.2 Item requirements. The individual item requirements shall be in accordance with MIL-PRF-38535 and as specified herein or as modified in the device manufacturer's Quality Management (QM) plan. The modification in the QM plan shall not affect the form, fit, or function as described herein.

3.3 Design, construction, and physical dimensions. The design, construction, and physical dimensions shall be as specified in MIL-PRF-38535 and herein.

3.3.1 Terminal connections and logic diagrams . The terminal connections and logic diagrams shall be as specified on figure 1 and 2.

3.3.2 Truth tables and logic equations. The truth tables and logic equations shall be as specified on figure 3.

3.3.4 Schematic circuits. The schematic circuits shall be maintained by the manufacturer and made available to the qualifying activity and the preparing activity upon request.

3.3.5 Case outlines. Case outlines shall be as specified in 1.2.3.

3.4 Lead material and finish. Lead material and finish shall be in accordance with MIL-PRF-38535 (see 6.6).

3.5 Electrical performance characteristics. The electrical performance characteristics are as specified in table 1 and apply over the full recommended case operating temperature range, unless otherwise specified.

3.6 Electrical test requirements. The electrical test requirements for each device class shall be the subgroups specified in table II. The electrical tests for each subgroup are described in table III.

3.7 Marking. Marking shall be in accordance with MIL-PRF-38535.

3.8 Microcircuit group assignment. The devices covered by this specification shall be in microcircuit group number 4 (see MIL-PRF-38535, appendix A).

4. VERIFICATION

4.1 Sampling and inspection. Sampling and inspection procedures shall be in accordance with MIL-PRF-38535 or as modified in the device manufacturer's Quality Management (QM) plan. The modification in the QM plan shall not effect the form, fit, or function as described herein.

4.2 Qualification inspection. Qualification inspection shall be in accordance with MIL-PRF-38535.

4.2 Screening. Screening shall be in accordance with MIL-PRF-38535 and shall be conducted on all devices prior to qualification and conformance inspection. The following additional criteria shall apply:

a. The burn-in test duration, test condition, and test temperature, or approved alternatives shall be as specified in the device manufacturer's QM plan in accordance with MIL-PRF-38535. The burn-in test circuit shall be maintained under document control by the device manufacturer's Technology Review Board (TRB) in accordance with MIL-PRF-38535 and shall be made available to the acquiring or preparing activity upon request. The test circuit shall specify the inputs, outputs, biases, and power dissipation, as applicable, in accordance with the intent specified in test method 1015 of MIL-STD-883.

b. Interim and final electrical test parameters shall be as specified in table II, except interim electrical parameters test prior to burn-in is optional at the discretion of the manufacturer.

c. Additional screening for space level product shall be as specified in MIL-PRF-38535.

TABLE I. Electrical performance characteristics.

Test	Symbol	Conditions 1/	Device type	Limits Min	Limits Max	Unit
High-level output voltage	V_{OH}	V_{CC} = 4.5 V; V_{IL} = 0.8 V; V_{IN} = 2.0 V; I_{OH} = -800 μA	01, 02	2.4		V
Low-level output voltage	V_{OL}	V_{CC} = 4.5 V; V_{IL} = 0.8 V; V_{IH} = 2.0 V; I_{OL} = 16 mA	01, 02		0.4	V
Input diode clamp	V_{IC}	V_{CC} = 5.5 V; I_{IN} = -12 mA T_C = 25°C	01, 02		-1.5	V
Low-level input current at M input	I_{IL1}	V_{CC} = 5.5 V; V_{IN} = 0.4 V 2/	01	-0.7	-1.6	mA
Low-level input current at $\overline{B}$ input	I_{IL2}	V_{CC} = 5.5 V; V_{IN} = 0.4 V 2/	01	-2.1	-4.8	mA
Low-level input current at S_0 or S_3 input	I_{IL3}	V_{CC} = 5.5 V; V_{IN} = 0.4 V 2/	01	-2.8	-6.4	mA
Low-level input current at S_1 or S_2	I_{IL4}	V_{CC} = 5.5 V; V_{IN} = 0.4 V; $\overline{A}0$, $\overline{A}1$, $\overline{A}2$, $\overline{A}3$ = 5.5 V 3/	01	-2.8	-6.4	mA
Low-level input current at Cn input	I_{IL5}	V_{CC} = 5.5 V; V_{IN} = 0.4 V 3/	01	-3.5	-8.0	mA
Low-level input current at $\overline{A}$ input	I_{IL6}	V_{CC} = 5.5 V; V_{IN} = 0.4 V 2/	01	-1.4	-3.2	mA
Low-level input current at $\overline{G}1$ input	I_{IL7}	V_{CC} = 5.5 V; V_{IN} = 0.4 V, Cn = GND 2/	02	-5.6	-16.0	mA
Low-level input current at $\overline{P}1$ input	I_{IL8}	V_{CC} = 5.5 V; V_{IN} = 0.4 V 2/	02	-2.8	-8.0	mA
Low-level input current at $\overline{G}0$ input	I_{IL9}	V_{CC} = 5.5 V; V_{IN} = 0.4 V, Cn = GND 2/	02	4.9	-14.0	mA
Low-level input current at $\overline{P}0$ input	I_{IL10}	V_{CC} = 5.5 V; V_{IN} = 0.4 V 2/	02	-2.8	-8.0	mA
Low-level input current at $\overline{G}3$ input	I_{IL11}	V_{CC} = 5.5 V; V_{IN} = 0.4 V 2/	02	-2.8	-8.0	mA
Low-level input current at $\overline{P}3$ input	I_{IL12}	V_{CC} = 5.5 V; V_{IN} = 0.4 V 2/	02	-1.4	-4.0	mA
Low-level input current at Cn input	I_{IL13}	V_{CC} = 5.5 V; V_{IN} = 0.4 V 2/	02	-0.7	-2.0	mA
Low-level input current at $\overline{G}2$ input	I_{IL14}	V_{CC} = 5.5 V; V_{IN} = 0.4 V, Cn = GND 2/	02	-4.9	-14.0	mA
Low-level input current at $\overline{P}2$ input	I_{IL15}	V_{CC} = 5.5 V; V_{IN} = 0.4 V 2/	02	-2.1	-6.0	mA
High-level input current at M input	I_{IH1}	V_{CC} = 5.5 V; V_{IN} = 2.4 V 3/	01		40	μA
High-level input current at $\overline{A}$ or $\overline{B}$ input	I_{IH2}	V_{CC} = 5.5 V; V_{IN} = 2.4 V 3/	01		120	μA
High-level input current at S_0 or S_3 input	I_{IH3}	V_{CC} = 5.5 V; V_{IN} = 2.4 V 3/	01		160	μA

See footnotes at end of table.

TABLE I. Electrical performance characteristics.

Test	Symbol	Conditions 1/	Device type	Limits Min	Limits Max	Unit
High-level input current at S_1 or S_2 input	I_{IH4}	V_{CC} = 5.5 V; V_{IN} = 2.4 V; $\overline{B}0$, $\overline{B}1$, $\overline{B}2$, $\overline{B}3$ = 5.5 V 3/	01		160	µA
High-level input current at Cn input	I_{IH5}	V_{CC} = 5.5 V; V_{IN} = 2.4 V 2/	01		200	µA
High-level input current at M input	I_{IH6}	V_{CC} = 5.5 V; V_{IN} = 5.5 V 3/	01		100	µA
High-level input current at $\overline{A}$ or $\overline{B}$ input	I_{IH7}	V_{CC} = 5.5 V; V_{IN} = 5.5 V 3/	01		300	µA
High-level input current at S_0 or S_3 input	I_{IH8}	V_{CC} = 5.5 V; V_{IN} = 5.5 V 3/	01		400	µA
High-level input current at S_1 or S_2 input	I_{IH9}	V_{CC} = 5.5 V; V_{IN} = 5.5 V; $\overline{B}0$, $\overline{B}1$, $\overline{B}2$, $\overline{B}3$ = 5.5 V 3/	01		400	µA
High-level input current at Cn input	I_{IH10}	V_{CC} = 5.5 V; V_{IN} = 5.5 V 2/	01		500	µA
High-level input current at $\overline{G}$ input	I_{IH11}	V_{CC} = 5.5 V; V_{IN} = 2.4 V Cn = 5.5 V 3/	02		400	µA
High-level input current at $\overline{P}1$ input	I_{IH12}	V_{CC} = 5.5 V; V_{IN} = 2.4 V 3/	02		200	µA
High-level input current at $\overline{G}0$ input	I_{IH13}	V_{CC} = 5.5 V; V_{IN} = 2.4 V Cn = 5.5 V 3/	02		350	µA
High-level input current at $\overline{P}0$ input	I_{IH14}	V_{CC} = 5.5 V; V_{IN} = 2.4 V 3/	02		200	µA
High-level input current at $\overline{G}3$ input	I_{IH15}	V_{CC} = 5.5 V; V_{IN} = 2.4 V 3/	02		200	µA
High-level input current at $\overline{P}3$ input	I_{IH16}	V_{CC} = 5.5 V; V_{IN} = 2.4 V 3/	02		100	µA
High-level input current at Cn input	I_{IH17}	V_{CC} = 5.5 V; V_{IN} = 2.4 V 3/	02		70	µA
High-level input current at $\overline{G}2$ input	I_{IH18}	V_{CC} = 5.5 V; V_{IN} = 2.4 V Cn = 5.5 V 3/	02		350	µA
High-level input current at $\overline{P}2$ input	I_{IH19}	V_{CC} = 5.5 V; V_{IN} = 2.4 V 3/	02		150	µA
High-level input current at $\overline{G}1$ input	I_{IH20}	V_{CC} = 5.5 V; V_{IN} = 5.5 V Cn = 5.5 V 3/	02		800	µA
High-level input current at $\overline{P}1$ input	I_{IH21}	V_{CC} = 5.5 V; V_{IN} = 5.5 V 3/	02		400	µA
High-level input current at $\overline{G}0$ input	I_{IH22}	V_{CC} = 5.5 V; V_{IN} = 5.5 V Cn = 5.5 V 3/	02		700	µA
High-level input current at $\overline{P}0$ input	I_{IH23}	V_{CC} = 5.5 V; V_{IN} = 5.5 V 3/	02		400	µA

See footnotes at end of table.

TABLE I. Electrical performance characteristics.

Test	Symbol	Conditions 1/	Device type	Limits Min	Limits Max	Unit
High-level input current at $\overline{G}3$ input	I_{IH24}	V_{CC} = 5.5 V; V_{IN} = 5.5 V 3/	02		400	µA
High-level input current at $\overline{P}3$ input	I_{IH25}	V_{CC} = 5.5 V; V_{IN} = 5.5 V 3/	02		200	µA
High-level input current at Cn input	I_{IH26}	V_{CC} = 5.5 V; V_{IN} = 5.5 V 3/	02		160	µA
High-level input current at $\overline{G}2$ input	I_{IH27}	V_{CC} = 5.5 V; V_{IN} = 5.5 V Cn = 5.5 V 3/	02		700	µA
High-level input current at $\overline{P}2$ input	I_{IH28}	V_{CC} = 5.5 V; V_{IN} = 5.5 V 3/	02		300	µA
Short-circuit output current at $\overline{G}$ output	I_{OS1}	V_{CC} = 5.5 V; S3, $\overline{A}3$, $\overline{B}3$ = 5.5 V 3/ 4/	01	-20	-55	mA
Short-circuit output current at Cn+4 output	I_{OS2}	V_{CC} = 5.5 V 3/ 4/	01	-20	-55	mA
Short-circuit output current at $\overline{P}$, $\overline{F}0$ thru $\overline{F}3$ outputs	I_{OS3}	V_{CC} = 5.5 V 2/ 4/	01	-20	-55	mA
Short-circuit output current	I_{OS4}	V_{CC} = 5.5 V; V_{IL} = GND; V_{IN} = 5.5 V 4/	02	-40	-100	mA
Collector cutoff current at A = B output	I_{CEX}	V_{CC} = 4.5 V; $V_{(A = B)}$ = 5.5 V; all input = 2.0 V	01		250	µA
Low-level supply current	I_{CCL1}	V_{CC} = 5.5 V; V_{IL} = 0 V; V_{IH} = 5.5 V	01		127	mA
	I_{CCL2}	V_{CC} = 5.5 V; V_{IL} = 0 V; V_{IH} = 5.5 V	02		65	mA
High-level supply current	I_{CCH1}	V_{CC} = 5.5 V; V_{IL} = 0 V; V_{IH} = 5.5 V	01		135	mA
	I_{CCH2}	V_{CC} = 5.5 V; V_{IL} = 0 V; V_{IH} = 5.5 V	02		55	mA
Propagation delay times, high-to-low level output: 5/						
$\overline{A}_I$ or $\overline{B}_I$ to any $\overline{F}$ $\overline{SUM}$ mode	t_{PHL1}	V_{CC} = 5.0 V See figure 4 $\overline{SUM}$ mode test table	01	7	46	ns
$\overline{A}_I$ or $\overline{B}_I$ to any $\overline{F}$ $\overline{DIFF}$ mode	t_{PHL2}	V_{CC} = 5.0 V See figure 4 $\overline{DIFF}$ mode test table	01	7	49	ns
$\overline{A}_I$ or $\overline{B}_I$ to $\overline{P}$ $\overline{SUM}$ mode	t_{PHL3}	V_{CC} = 5.0 V See figure 4 $\overline{SUM}$ mode test table	01	7	40	ns
$\overline{A}_I$ or $\overline{B}_I$ to $\overline{P}$ $\overline{DIFF}$ mode	t_{PHL4}	V_{CC} = 5.0 V See figure 4 $\overline{DIFF}$ mode test table	01	7	40	ns
$\overline{A}_I$ or $\overline{B}_I$ to $\overline{G}$ $\overline{SUM}$ mode	t_{PHL5}	V_{CC} = 5.0 V See figure 4 $\overline{SUM}$ mode test table	01	7	30	ns
$\overline{A}_I$ or $\overline{B}_I$ to $\overline{G}$ $\overline{DIFF}$ mode	t_{PHL6}	V_{CC} = 5.0 V See figure 4 $\overline{DIFF}$ mode test table	01	7	40	ns

See footnotes at end of table I.

TABLE I. Electrical performance characteristics.

Test	Symbol	Conditions 1/	Device type	Limits Min	Limits Max	Unit
Cn to any $\overline{F}$ $\overline{SUM}$ mode	t_{PHL7}	V_{CC} = 5.0 V See figure 4 $\overline{SUM}$ mode test table	01	7	25	ns
$\overline{A}_I$ or $\overline{B}_I$ to A = B $\overline{DIFF}$ mode	t_{PHL8}	V_{CC} = 5.0 V See figure 4 $\overline{DIFF}$ mode test table	01	7	76	ns
Cn or Cn+4 $\overline{SUM}$ mode	t_{PHL9}	V_{CC} = 5.0 V See figure 4 $\overline{SUM}$ mode test table	01	7	30	ns
Cn to Cn+4 $\overline{DIFF}$ mode	t_{PHL10}	V_{CC} = 5.0 V See figure 4 $\overline{DIFF}$ mode test table	01	7	30	ns
$\overline{A}_I$ or $\overline{B}_I$ to Cn+4 $\overline{SUM}$ mode	t_{PHL11}	V_{CC} = 5.0 V See figure 4 $\overline{SUM}$ mode test table	01	7	41	ns
$\overline{A}_I$ or $\overline{B}_I$ to Cn+4 $\overline{DIFF}$ mode	t_{PHL12}	V_{CC} = 5.0 V See figure 4 $\overline{DIFF}$ mode test table	01	7	50	ns
$\overline{A}_I$ or $\overline{B}_I$ to any $\overline{F}$ logic mode	t_{PHL13}	V_{CC} = 5.0 V See figure 4 logic mode test table	01	7	49	ns
Propagation delay times, low-to-high level output: 5/						
$\overline{A}_I$ or $\overline{B}_I$ to any $\overline{F}$ $\overline{SUM}$ mode	t_{PLH1}	V_{CC} = 5.0 V See figure 4 $\overline{SUM}$ mode test table	01	7	60	ns
$\overline{A}_I$ or $\overline{B}_I$ to any $\overline{F}$ $\overline{DIFF}$ mode	t_{PLH2}	V_{CC} = 5.0 V See figure 4 $\overline{DIFF}$ mode test table	01	7	69	ns
$\overline{A}_I$ or $\overline{B}_I$ to $\overline{P}$ $\overline{SUM}$ mode	t_{PLH3}	V_{CC} = 5.0 V See figure 4 $\overline{SUM}$ mode test table	01	7	27	ns
$\overline{A}_I$ or $\overline{B}_I$ to $\overline{P}$ $\overline{DIFF}$ mode	t_{PLH4}	V_{CC} = 5.0 V See figure 4 $\overline{DIFF}$ mode test table	01	7	40	ns
$\overline{A}_I$ or $\overline{B}_I$ to $\overline{G}$ $\overline{SUM}$ mode	t_{PLH5}	V_{CC} = 5.0 V See figure 4 $\overline{SUM}$ mode test table	01	7	27	ns
$\overline{A}_I$ or $\overline{B}_I$ to $\overline{G}$ $\overline{DIFF}$ mode	t_{PLH6}	V_{CC} = 5.0 V See figure 4 $\overline{DIFF}$ mode test table	01	7	40	ns
Cn to any $\overline{F}$ $\overline{SUM}$ mode	t_{PLH7}	V_{CC} = 5.0 V See figure 4 $\overline{SUM}$ mode test table	01	7	27	ns
$\overline{A}_I$ or $\overline{B}_I$ to A = B $\overline{DIFF}$ mode	t_{PLH8}	V_{CC} = 5.0 V See figure 4 $\overline{DIFF}$ mode test table	01	7	80	ns
Cn to Cn+4 $\overline{SUM}$ mode	t_{PLH9}	V_{CC} = 5.0 V See figure 4 $\overline{SUM}$ mode test table	01	7	28	ns
Cn to Cn+4 $\overline{DIFF}$ mode	t_{PLH10}	V_{CC} = 5.0 V See figure 4 $\overline{DIFF}$ mode test table	01	7	28	ns
$\overline{A}_I$ or $\overline{B}_I$ to Cn+4 $\overline{SUM}$ mode	t_{PLH11}	V_{CC} = 5.0 V See figure 4 $\overline{SUM}$ mode test table	01	7	50	ns

See footnotes at end of table I.

TABLE I. Electrical performance characteristics.

Test	Symbol	Conditions 1/	Device type	Limits		Unit
$\overline{A}_I$ or $\overline{B}_I$ to Cn+4 $\overline{DIFF}$ mode	t_{PLH12}	V_{CC} = 5.0 V See figure 4 $\overline{DIFF}$ mode test table	01	7	50	ns
$\overline{A}_I$ or $\overline{B}_I$ to any $\overline{F}$ logic mode	t_{PLH13}	V_{CC} = 5.0 V See figure 4 logic mode test table	01	7	69	ns
Propagation delay times, high-to-low level output: 6/						
Cn to Cn+x, Cn+y, Cn+2	t_{PHL1}	V_{CC} = 5.0 V; $\overline{P}0$, $\overline{P}1$, $\overline{P}2$ = GND; $\overline{G}0$, $\overline{G}1$, $\overline{G}2$ = 2.4 V	02	6	35	ns
$\overline{P}0$, $\overline{P}1$, or $\overline{P}2$ to Cn+x, Cn+y, Cn+z	t_{PHL2}	$\overline{P}_I$ = GND; Cn, $\overline{G}0$, $\overline{G}1$, $\overline{G}2$ = V_{CC} = 5.0 V	02	3	32	ns
$\overline{G}0$, $\overline{G}1$, or $\overline{G}2$ to Cn+y, Cn+x, Cn+z	t_{PHL3}	$\overline{G}_I$ = 2.4 V; Cn, $\overline{P}0$, $\overline{P}1$, $\overline{P}2$ = GND, V_{CC} = 5.0 V 7/	02	3	32	ns
$\overline{P}1$, $\overline{P}2$, or $\overline{P}3$ to $\overline{G}$ or $\overline{P}$	t_{PHL4}	V_{CC} = 5.0 V; $\overline{P}_I$ = GND; Cn, $\overline{G}0$, $\overline{G}1$, $\overline{G}2$, $\overline{G}3$ = 2.4 V 7/	02	3	35	ns
$\overline{G}0$, $\overline{G}1$, $\overline{G}2$, or $\overline{G}3$ to $\overline{G}$	t_{PHL5}	V_{CC} = 5.0 V; $\overline{G}_I$ = 2.4 V; $\overline{P}1$, $\overline{P}2$, $\overline{P}3$ = GND 7/	02	3	35	ns
$\overline{P}0$, $\overline{P}1$, $\overline{P}2$, or $\overline{P}3$ to $\overline{P}$	t_{PHL6}	$\overline{P}_I$ = GND 7/	02	3	35	ns
Propagation delay times, low-to-high level output: 6/						
Cn to Cn+x, Cn+y, Cn+2	t_{PLH1}	V_{CC} = 5.0 V; $\overline{P}0$, $\overline{P}1$, $\overline{P}2$ = GND; $\overline{G}0$, $\overline{G}1$, $\overline{G}2$ = 2.4 V	02	6	29	ns
$\overline{P}0$, $\overline{P}1$, or $\overline{P}2$ to Cn+x, Cn+y, Cn+z	t_{PLH2}	V_{CC} = 5.0 V; Cn, $\overline{G}0$, $\overline{G}1$, $\overline{G}2$, $\overline{G}3$ = 2.4 V; $\overline{P}_I$ = GND 7/	02	3	25	ns
$\overline{G}0$, $\overline{G}1$, or $\overline{G}2$ to Cn+y, Cn+x, Cn+z	t_{PLH3}	V_{CC} = 5.0 V; Cn, $\overline{P}0$, $\overline{P}1$, $\overline{P}2$ = GND; $\overline{G}_I$ = 2.4 V 7/	02	3	25	ns
$\overline{P}1$, $\overline{P}2$, or $\overline{P}3$ to G or P	t_{PLH4}	V_{CC} = 5.0 V; Cn, $\overline{G}0$, $\overline{G}1$, $\overline{G}2$, $\overline{G}3$ = 2.4 V; $\overline{P}_I$ = GND 7/	02	3	26	ns
$\overline{G}0$, $\overline{G}1$, $\overline{G}2$, or $\overline{G}3$ to $\overline{G}$	t_{PLH5}	V_{CC} = 5.0 V; $\overline{P}1$, $\overline{P}2$, $\overline{P}3$ = GND; $\overline{G}_I$ = 2.4 V 7/	02	3	26	ns
$\overline{P}0$, $\overline{P}1$, $\overline{P}2$, or $\overline{P}3$ to $\overline{P}$	t_{PLH6}	V_{CC} = 5.0 V; $\overline{P}_I$ = GND 7/	02	3	26	ns

NOTES:
1/ Condition of inputs specified in table III.
2/ All unspecified inputs at 5.5 V.
3/ All unspecified inputs at 0 V.
4/ Not more than one output should be shorted at a time.
5/ In A_I and B_I, I = 0, 1, 2, 3.
6/ In G_I and P_I, I = 0, 1, 2, or 3.
7/ If not under test.

TABLE II. Electrical test requirements.

MIL-PRF-38535 Test requirement	Subgroups (see table III)	
	Class S Devices	Class B Devices
Interim electrical parameters	1	1
Final electrical test parameters	1*, 2, 3, 7, 9, 10, 11	1*, 2, 3, 7, 9
Group A test requirements	1, 2, 3, 7, 8 9, 10, 11	1, 2, 3, 7, 9
Group B electrical test parameters when using the method 5005 QCI option	1, 2, 3, 9, 10, 11	1, 2, 3, 9
Groups C end point electrical parameters	1, 2, 3, 9, 10, 11	1, 2, 3
Additional electrical subgroups for Group C periodic inspections	None	10, 11
Group D end point electrical parameters	1, 2, 3	1, 2, 3

*PDA applies to subgroup 1.

4.3 Qualification inspection. Qualification inspection shall be in accordance with MIL-PRF-38535.

4.4.1 Group A inspection. Group A inspection shall be in accordance with table III of MIL-PRF-38535 and as follows:

a. Tests shall be as specified in table II herein.

b. Subgroups 4, 5, and 6, shall be omitted.

4.4.2 Group B inspection. Group B inspection shall be in accordance with table II of MIL-PRF-38535.

4.4.3 Group C inspection. Group C inspection shall be in accordance with table IV of MIL-PRF-38535 and as follows:

a. End point electrical parameters shall be as specified in table II herein.

b. Subgroups 3 and 4 shall be added to the group C inspection requirements for class B devices and shall consist of the tests, conditions, and limits specified for subgroups 10 and 11 of group A.

c. The steady-state life test duration, test condition, and test temperature, or approved alternatives shall be as specified in the device manufacturer's QM plan in accordance with MIL-PRF-38535. The burn-in test circuit shall be maintained under document control by the device manufacturer's Technology Review Board (TRB) in accordance with MIL-PRF-38535 and shall be made available to the acquiring or preparing activity upon request. The test circuit shall specify the inputs, outputs, biases, and power dissipation, as applicable, in accordance with the intent specified in test method 1005 of MIL-STD-883.

4.4.4 Group D inspection. Group D inspection shall be in accordance with table V of MIL-PRF-38535. End-point electrical parameters shall be as specified in table II herein.

4.5 Methods inspection. Methods of inspection shall be as specified in the appropriate tables and as follows:

4.5.1 Voltage and current. All voltages given are referenced to the microcircuit ground terminal. Currents given are conventional current and positive when flowing into the referenced terminal.

Device type 01			Device type 02		
Terminal number	Case J, K, and Z	Function	Terminal number	Case E and F	Function
1	$\overline{B}$ 0	Word B input	1	$\overline{G}$ 1	Carry generate input
2	$\overline{A}$ 0	Word A input	2	$\overline{P}$ 1	Carry propagate input
3	S3	Function-select input	3	$\overline{G}$ 0	Carry generate input
4	S2	Function-select input	4	$\overline{P}$ 0	Carry propagate input
5	S1	Function-select input	5	$\overline{G}$ 3	Carry generate input
6	S0	Function-select input	6	$\overline{P}$ 3	Carry propagate input
7	Cn	Inv. carry input	7	$\overline{P}$	Carry propagate output
8	M	Mode control input	8	GND	Ground
9	$\overline{F}$ 0	Function output	9	Cn + z	Carry output
10	$\overline{F}$ 1	Function output	10	$\overline{G}$	Carry generate output
11	$\overline{F}$ 2	Function output	11	Cn + y	Carry output
12	GND	Ground	12	Cn + x	Carry output
13	$\overline{F}$ 3	Function output	13	Cn	Carry input
14	A = B	Comparator output	14	$\overline{G}$ 2	Carry generate input
15	$\overline{P}$	Carry propagate output	15	$\overline{P}$ 2	Carry propagate input
16	Cn + 4	Inv. carry output	16	V_{CC}	Supply voltage
17	$\overline{G}$	Carry generate output			
18	$\overline{B}$ 3	Word B input			
19	$\overline{A}$ 3	Word A input			
20	$\overline{B}$ 2	Word B input			
21	$\overline{A}$ 2	Word A input			
22	$\overline{B}$ 1	Word B input			
23	$\overline{A}$ 1	Word A input			
24	V_{CC}	Supply voltage			

Figure 1. Terminal connections.

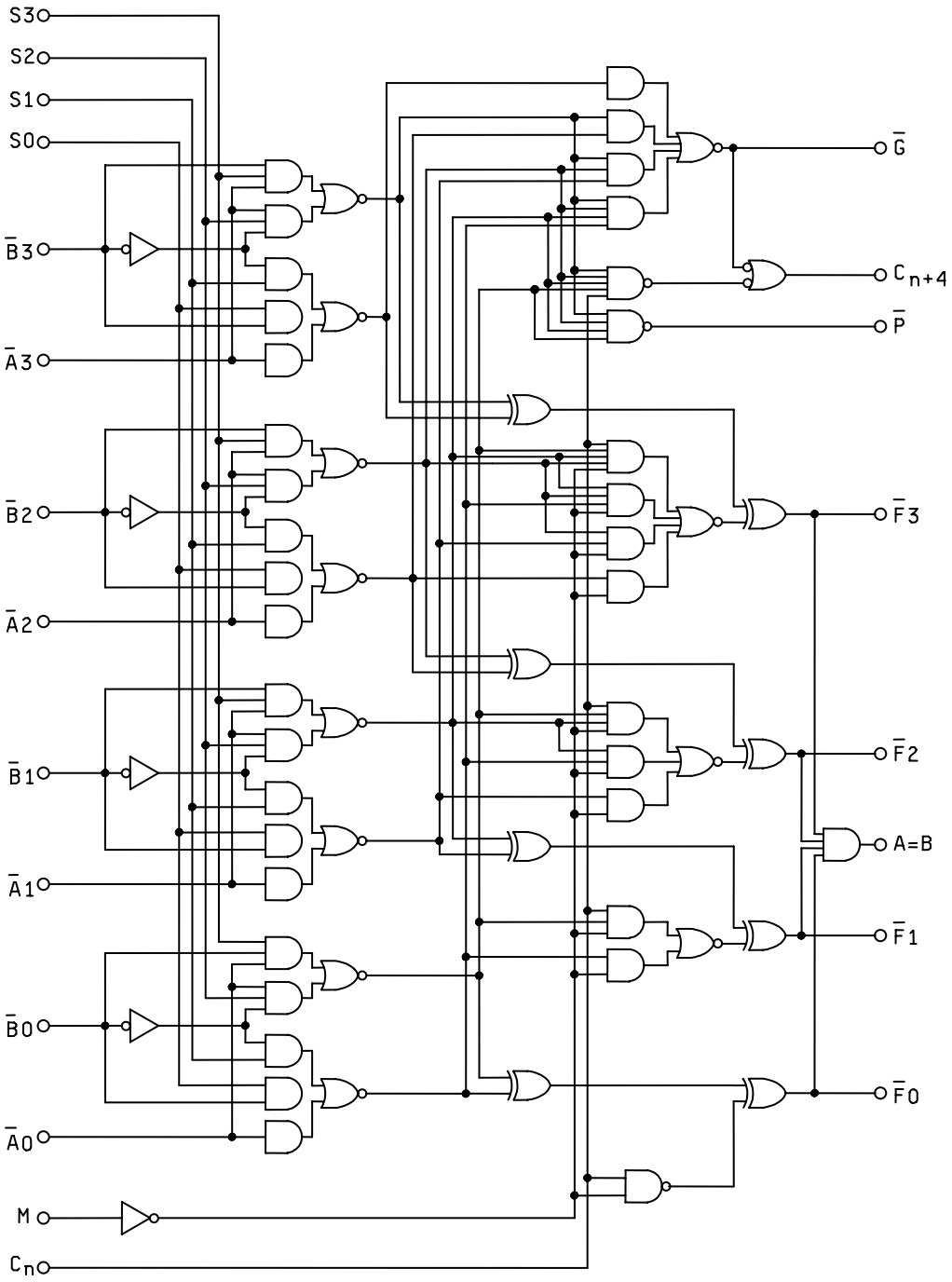

Circuits A and F

FIGURE 2. Logic diagram for device type 01.

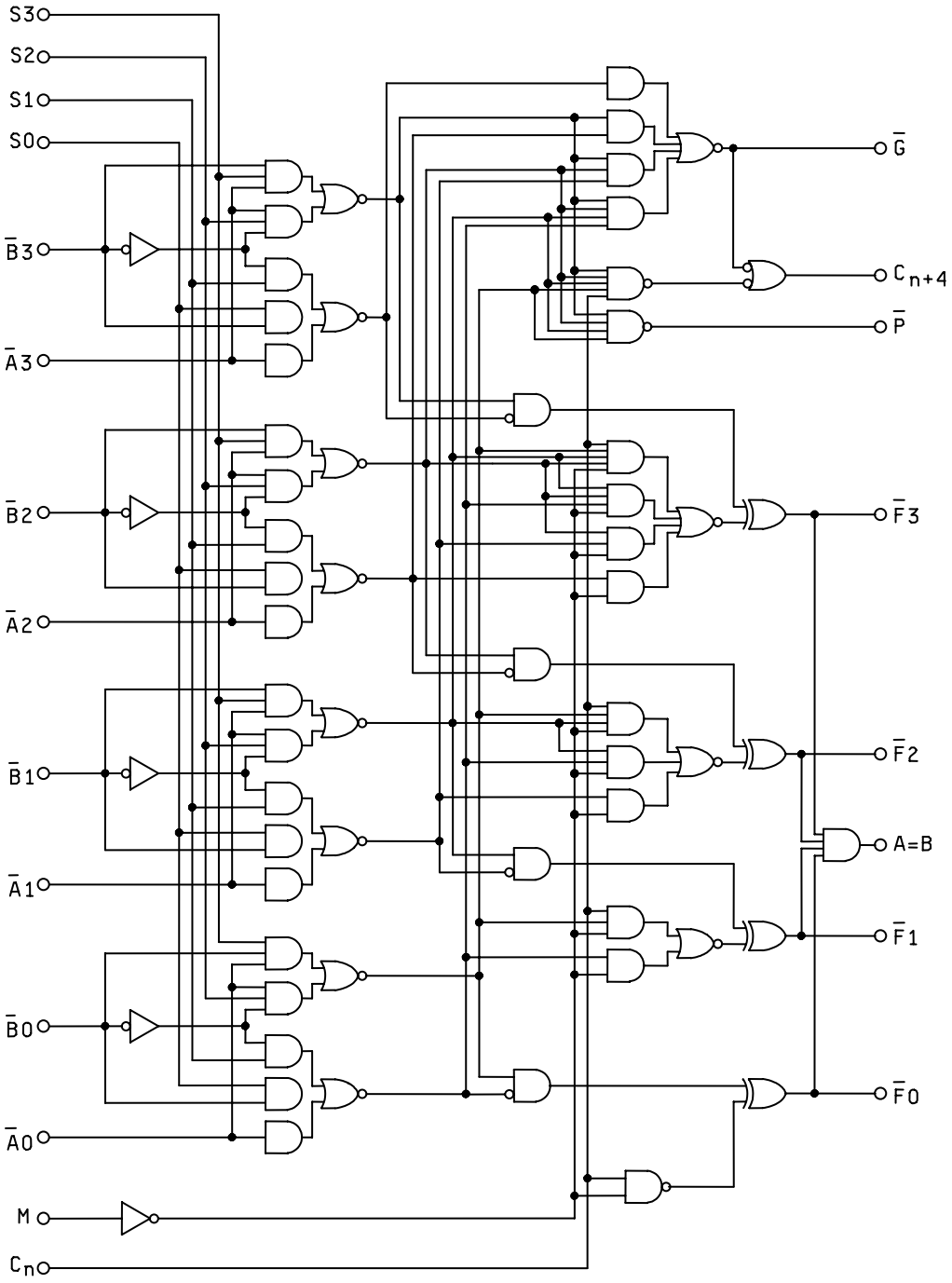

Circuits B, C, D, E, and G

FIGURE 2. Logic diagram for device type 01 - Continued.

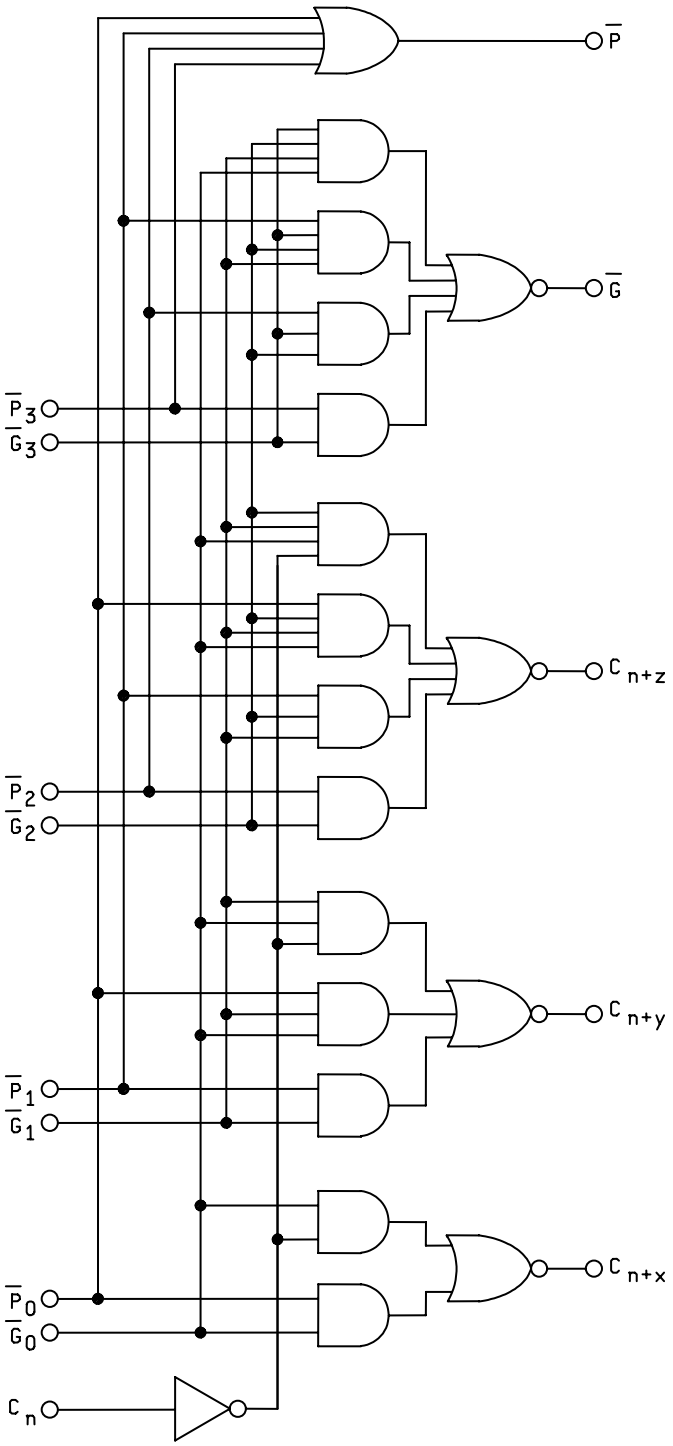

Circuits A, B, C,and D

Logic diagram for device type 02 - Continued.

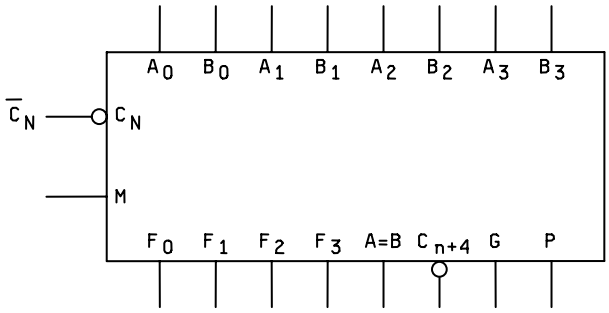

2/	Selection				Active high data 1/		
					M = H	M + L; Arithmetic operations	
	S3	S2	S1	S0	Logic functions	Cn = 0, $\overline{C}$n = 1= H	Cn = 1, $\overline{C}$n = 0 = L
0	L	L	L	L	F = $\overline{A}$	F = A	F = A plus 1
1	L	L	L	H	F = $\overline{A+B}$	F = A + B	F = (A + B) plus 1
2	L	L	H	L	F = $\overline{A}$ B	F = A + $\overline{B}$	F = (A + $\overline{B}$) plus 1
3	L	L	H	H	F = 0	F = minus 1 (2's compl)	F = zero
4	L	H	L	L	F = $\overline{AB}$	F = A plus A$\overline{B}$	F = A plus A$\overline{B}$ plus 1
5	L	H	L	H	F = $\overline{B}$	F = (A + B) plus A$\overline{B}$	F = (A + B) plus A$\overline{B}$ plus 1
6	L	H	H	L	F = A ⊕ B	F = A minus B minus 1	F = A minus B
7	L	H	H	H	F = A$\overline{B}$	F = A$\overline{B}$ minus 1	F = A$\overline{B}$
8	H	L	L	L	F = $\overline{A}$ + B	F = A plus AB	F = A plus AB plus 1
9	H	L	L	H	F = $\overline{A \oplus B}$	F = A plus B	F = A plus B plus 1
10	H	L	H	L	F = B	F = (A + $\overline{B}$) plus AB	F = (A + $\overline{B}$) plus AB plus 1
11	H	L	H	H	F = AB	F = AB minus 1	F = AB
12	H	H	L	L	F = 1	F = A plus A 3/	F = A plus A plus 1
13	H	H	L	H	F = A + $\overline{B}$	F = (A +B) plus A	F = (A + B) plus A plus 1
14	H	H	H	L	F = A + B	F = (A + $\overline{B}$) plus A	F = (A + $\overline{B}$) plus A plus 1
15	H	H	H	H	F = A	F = A minus 1	F = A

1/ The table shown applies for negative logic. If positive logic is used, active low data becomes active high data.
2/ This device (ALU) can be used as a comparator when placed in the subtract mode (i.e., S3 S2 S1 S0 are at logical levels LHHL respectively) and the following expressions are valid:

Active low data

When Cn is high and Cn+4 is high, the A ≤ B.
When Cn is low and Cn+4 is high, the A < B.
When Cn is high and Cn+4 is low, the A > B.
When Cn is low and Cn+4 is low, the A ≥ B.

3/ Each bit is shifted to the next more significant position.

Figure 3. Truth tables and logic equations for device type 01.

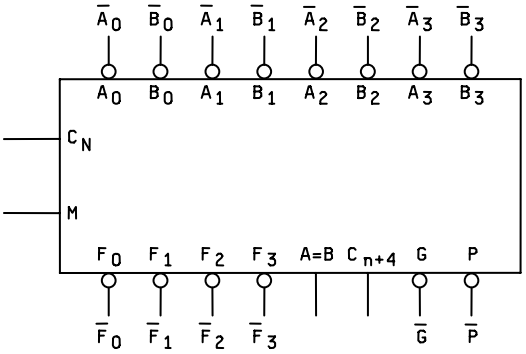

2/	Selection				Active low data 1/		
					M = H	M + L; Arithmetic operations	
	S3	S2	S1	S0	Logic functions	Cn = 0, $\overline{C}$n = 1= H	Cn = 1, $\overline{C}$n = 0 = L
0	L	L	L	L	F = $\overline{A}$	F = A minus 1	F = A
1	L	L	L	H	F = $\overline{AB}$	F = AB minus 1	F = AB
2	L	L	H	L	F = $\overline{A}$ + B	F = A$\overline{B}$ minus 1	F = A$\overline{B}$
3	L	L	H	H	F = 1	F = minus 1 (2's compl)	F = zero
4	L	H	L	L	F = $\overline{A+B}$	F = A plus (A + $\overline{B}$)	F = A plus (A + $\overline{B}$) plus 1
5	L	H	L	H	F = $\overline{B}$	F = AB plus (A + $\overline{B}$)	F = AB plus (A + $\overline{B}$) plus 1
6	L	H	H	L	F = $\overline{A \oplus B}$	F = A minus B minus 1	F = A minus B
7	L	H	H	H	F = A + $\overline{B}$	F = A + $\overline{B}$	F = (A + $\overline{B}$) plus 1
8	H	L	L	L	F = $\overline{A}$ B	F = A plus (A +B)	F = A plus (A + B) plus 1
9	H	L	L	H	F = A $\oplus$ B	F = A plus B	F = A plus B plus 1
10	H	L	H	L	F = B	F = A$\overline{B}$ plus (A + B)	F = A$\overline{B}$ plus (A + B) plus 1
11	H	L	H	H	F = A + B	F = A + B	F = (A + B) plus 1
12	H	H	L	L	F = 0	F = A plus A 3/	F = A plus A plus 1
13	H	H	L	H	F = A$\overline{B}$	F = AB plus A	F = AB plus A plus 1
14	H	H	H	L	F = AB	F = A$\overline{B}$ plus A	F = A$\overline{B}$ plus A plus 1
15	H	H	H	H	F = A	F = A	F = A plus 1

1/ The table shown applies for negative logic. If positive logic is used, active low data becomes active high data.
2/ This device (ALU) can be used as a comparator when placed in the subtract mode (i.e., S3 S2 S1 S0 are at logical levels LHHL respectively) and the following expressions are valid:

Active low data

When Cn is low and Cn+4 is low, the A $\leq$ B.
When Cn is high and Cn+4 is low, the A $<$ B.
When Cn is low and Cn+4 is high, the A $>$ B.
When Cn is high and Cn+4 is high, the A $\geq$ B.

3/ Each bit is shifted to the next more significant position.

Figure 3. Truth tables and logic equations for device type 01 - Continued.

Inputs									Outputs				
Cn	$\overline{G}$ 0	$\overline{P}$ 0	$\overline{G}$ 1	$\overline{P}$ 1	$\overline{G}$ 2	$\overline{P}$ 2	$\overline{G}$ 3	$\overline{P}$ 3	Cn+x	Cn+y	Cn+z	$\overline{G}$	$\overline{P}$
X	H	H							L				
L	H	X							L				
X	L	X							H				
H	X	L							H				
X	X	X	H	H						L			
X	H	H	H	X						L			
L	H	X	H	X						L			
X	X	X	L	X						H			
X	L	X	X	L						H			
H	X	L	X	L						H			
X	X	X	X	X	H	H					L		
X	X	X	H	H	H	X					L		
X	H	H	H	X	H	X					L		
L	H	X	H	X	H	X					L		
X	X	X	X	X	L	X					H		
X	X	X	L	X	X	L					H		
X	L	X	X	L	X	L					H		
H	X	L	X	L	X	L					H		
	X		X	X	X	X	H	H				H	
	X		X	X	H	H	H	X				H	
	X		H	H	H	X	H	X				H	
	H		H	X	H	X	H	X				H	
	X		X	X	X	X	L	X				L	
	X		X	X	L	X	X	L				L	
	X		L	X	X	L	X	L				L	
	L		X	L	X	L	X	L				L	
		H		X		X		X					H
		X		H		X		X					H
		X		X		H		X					H
		X		X		X		H					H
		L		L		L		L					L

H = High voltage level
L = Low voltage level
X = Don’t care

Figure 3. Truth tables and logic equations for device type 02 - Continued.

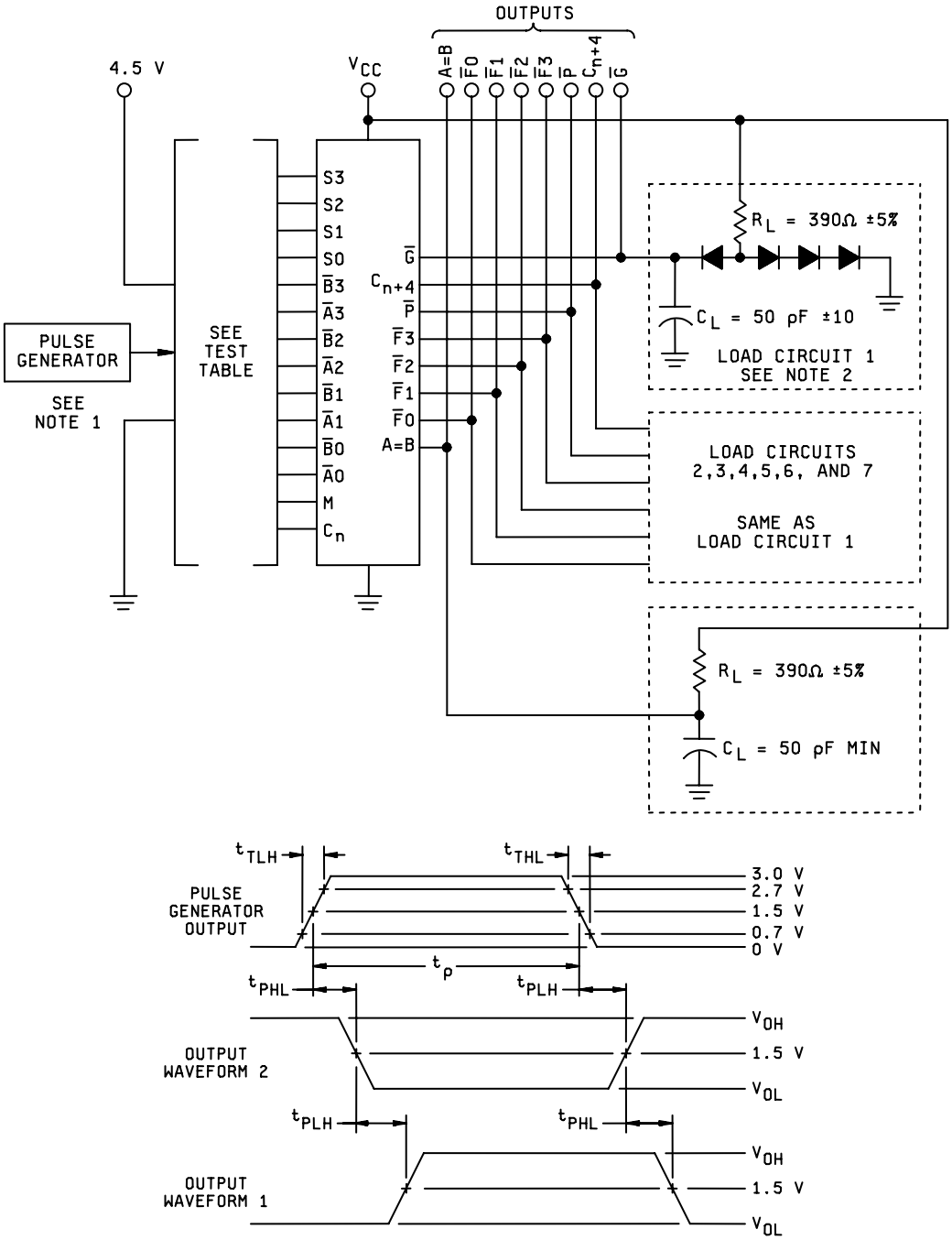

NOTES:

1. The pulse generator has the following characteristics: PRR = 1 MHz ± 10%, $Z_{OUT} \approx$ 50 ohms. Pulse width = 200 ns ± 10%, $t_{TLH} = t_{THL} \leq 10$ ns.
2. Load circuits on a given output are only required where the specific test given in table III indicates "OUT" on that output. Load circuits may otherwise be omitted.
3. C_L includes probe and jig capacitance.
4. All diodes are 1N3064, or equivalent.

FIGURE 4. Waveforms for propagation delay time and test circuit for device type 01.

$\overline{SUM}$ MODE TEST TABLE							
FUNCTION INPUTS: S0 = S3 = 4.5 V, S1 = S2 = M = 0 V							
TEST	INPUT UNDER TEST	OTHER INPUT SAME BIT		OTHER DATA INPUTS		OUTPUT UNDER TEST	OUTPUT WAVEFORM
		APPLY 4.5 V	APPLY GND	APPLY 4.5 V	APPLY GND		
t_{PLH1} t_{PHL1}	$\overline{A}_I$ 1/	$\overline{B}_I$	None	Remaining $\overline{A}$ and $\overline{B}$	Cn	Any $\overline{F}_I$	1
t_{PLH1} t_{PHL1}	$\overline{B}_I$	$\overline{A}_I$	None	Remaining $\overline{A}$ and $\overline{B}$	Cn	Any $\overline{F}_I$	1
t_{PLH3} t_{PHL3}	$\overline{A}_I$	$\overline{B}_I$	None	None	Remaining $\overline{A}$ and $\overline{B}$, Cn	$\overline{P}$	1
t_{PLH3} t_{PHL3}	$\overline{B}_I$	$\overline{A}_I$	None	None	Remaining $\overline{A}$ and $\overline{B}$, Cn	$\overline{P}$	1
t_{PLH5} t_{PHL5}	$\overline{A}_I$	None	$\overline{B}_I$	Remaining $\overline{B}$	Remaining $\overline{A}$, Cn	$\overline{G}$	1
t_{PLH5} t_{PHL5}	$\overline{B}_I$	None	$\overline{A}_I$	Remaining $\overline{B}$	Remaining $\overline{A}$, Cn	$\overline{G}$	1
t_{PLH7} t_{PHL7}	Cn	None	None	All $\overline{A}$	All $\overline{B}$	Any $\overline{F}_I$	1
t_{PLH9} t_{PHL9}	Cn	None	None	All $\overline{A}$	All $\overline{B}$	Cn+4	1
t_{PLH11} t_{PHL11}	$\overline{A}_I$	None	$\overline{B}_I$	Remaining $\overline{B}$	Remaining $\overline{A}$, Cn	Cn+4	2
t_{PLH11} t_{PHL11}	$\overline{B}_I$	None	$\overline{A}_I$	Remaining $\overline{B}$	Remaining $\overline{A}$, Cn	Cn+4	2

1/ In $\overline{A}_I$, $\overline{B}_I$, and $\overline{F}_I$, I = 0, 1, 2, or 3.

FIGURE 4. Waveforms for propagation delay time and test circuit for device type 01 - Continued.

$\overline{DIFF}$ MODE TEST TABLE							
FUNCTION INPUTS: S0 = S3 =4.5 V, S1 = S2 = M = 0 V							
TEST	INPUT UNDER TEST	OTHER INPUT SAME BIT		OTHER DATA INPUTS		OUTPUT UNDER TEST	OUTPUT WAVEFORM
		APPLY 4.5 V	APPLY GND	APPLY 4.5 V	APPLY GND		
t_{PLH2}	$\overline{A}_I$ 1/	None	$\overline{B}_I$	Remaining $\overline{A}$	Remaining $\overline{B}$, Cn	Any $\overline{F}_I$	1
t_{PHL2}							
t_{PLH2}	$\overline{B}_I$	$\overline{A}_I$	None	Remaining $\overline{A}$	Remaining $\overline{B}$, Cn	Any $\overline{F}_I$	2
t_{PHL2}							
t_{PLH4}	$\overline{A}_I$	None	$\overline{B}_I$	None	Remaining $\overline{A}$ and $\overline{B}$, Cn	$\overline{P}$	1
t_{PHL4}							
t_{PLH4}	$\overline{B}_I$	$\overline{A}_I$	None	None	Remaining $\overline{A}$ and $\overline{B}$, Cn	$\overline{P}$	2
t_{PHL4}							
t_{PLH6}	$\overline{A}_I$	$\overline{B}_I$	None	None	Remaining $\overline{A}$ and $\overline{B}$, Cn	$\overline{G}$	1
t_{PHL6}							
t_{PLH6}	$\overline{B}_I$	None	$\overline{A}_I$	None	Remaining $\overline{A}$ and $\overline{B}$, Cn	$\overline{G}$	2
t_{PHL6}							
t_{PLH8}	$\overline{A}_I$	None	$\overline{B}_I$	Remaining $\overline{A}$	Remaining $\overline{B}$, Cn	A = B	1
t_{PHL8}							
t_{PLH8}	$\overline{B}_I$	$\overline{A}_I$	None	Remaining $\overline{A}$	Remaining $\overline{B}$, Cn	A = B	2
t_{PHL8}							
t_{PLH10}	Cn	None	None	All $\overline{A}$ and $\overline{B}$	None	Cn+4	1
t_{PHL10}							
t_{PLH12}	$\overline{A}_I$	$\overline{B}_I$	None	None	Remaining $\overline{A}$ and $\overline{B}$, Cn	Cn+4	2
t_{PHL12}							
t_{PLH12}	$\overline{B}_I$	None	$\overline{A}_I$	None	Remaining $\overline{A}$ and $\overline{B}$, Cn	Cn+4	1
t_{PHL12}							

LOGIC MODE TEST TABLE							
FUNCTION INPUTS: S0 = S3 =4.5 V, S1 = S2 = M = 0 V							
TEST	INPUT UNDER TEST	OTHER INPUT SAME BIT		OTHER DATA INPUTS		OUTPUT UNDER TEST	OUTPUT WAVEFORM
		APPLY 4.5 V	APPLY GND	APPLY 4.5 V	APPLY GND		
t_{PLH13}	$\overline{A}_I$ 1/	None	$\overline{B}_I$	None	Remaining $\overline{A}$ and $\overline{B}$, Cn	Any $\overline{F}_I$	1
t_{PHL13}							
t_{PLH13}	$\overline{B}_I$	None	$\overline{A}_I$	None	Remaining $\overline{A}$ and $\overline{B}$, Cn	Any $\overline{F}_I$	1
t_{PHL13}							

1/ In $\overline{A}_I$, $\overline{B}_I$, and $\overline{F}$ i, I = 0, 1, 2, or 3.

FIGURE 4. Waveforms for propagation delay time and test circuit for device type 01 - Continued.

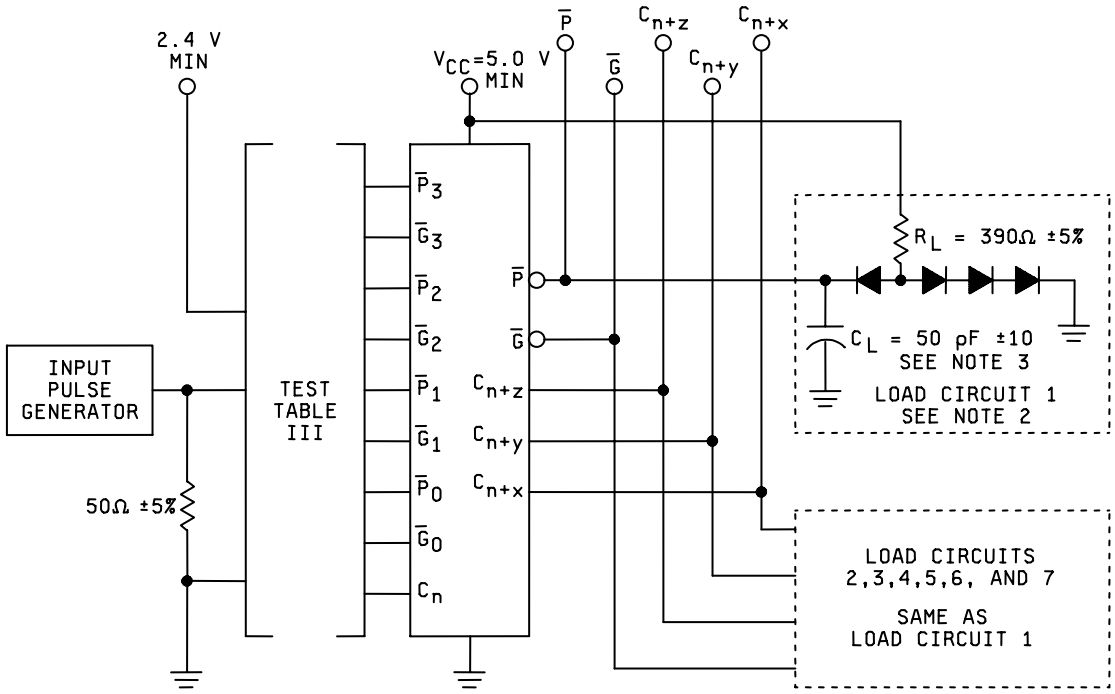

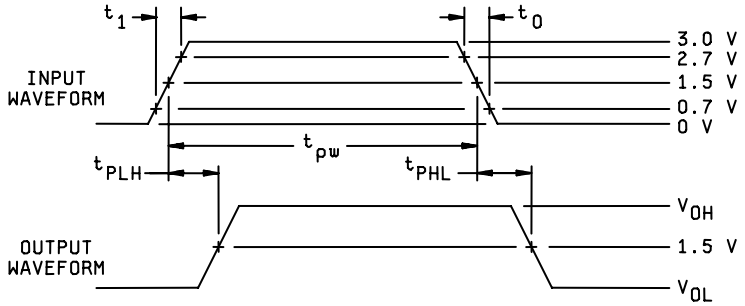

NOTES:

1. Input pulse characteristics: t_{PW} = 200 ns ± 10%, PRR = 1 MHz, $t_0 = t_1 \leq 10$ ns, $Z_{OUT} \approx$ 50 ohms.
2. Load circuits on a given output are only required where the specific test given in table III indicates "OUT" on that output. Load circuits may otherwise be omitted.
3. C_L = 50 pF including stray wiring and scope probe.
4. All diodes are 1N3064, or equivalent.

FIGURE 4. Waveforms for propagation delay time and test circuit for device type 02 - Continued.

TABLE III. Group A inspection for device type 01. 1/

Subgroup	Symbol	MIL-STD-883 method	Case J, K, L, Z Test No.	1 $\overline{B}$ 0	2 $\overline{A}$ 0	3 S3	4 S2	5 S1	6 S0	7 Cn	8 M	9 $\overline{F}$ 0	10 $\overline{F}$ 1	11 $\overline{F}$ 2	12 GND	Meas. terminal	Test limits Min	Max	Unit
1	V_{OH1}	3006	1	0.8 V	2.0 V	2.0 V	0.8 V	0.8 V	0.8 V	2.0 V					GND	$\overline{G}$	2.4		V
T_C = 25°C	V_{OH2}	"	2	2.0 V	"	2.0 V	2.0 V	0.8 V	0.8 V	0.8 V					"	Cn+4	"		"
	V_{OH3}	"	3	2.0 V	"	"	"	0.8 V	0.8 V	0.8 V					"	$\overline{P}$	"		"
	V_{OH4}	"	4	2.0 V	"	"	"	2.0 V	2.0 V	20 V	2.0 V	-800µA			"	$\overline{F}$ 0	"		"
	V_{OH4}	"	5	"	"	"	"	"	"	"	0.8 V		-800µA		"	$\overline{F}$ 1	"		"
	V_{OH4}	"	6	"	"	"	"	"	"	"	0.8 V			-800µA	"	$\overline{F}$ 2	"		"
	V_{OH4}	"	7	"	"	"	"	"	"	"	0.8 V				"	$\overline{F}$ 3	"		"
	V_{OL1}	3007	8	2.0 V	2.0 V	2.0 V	2.0 V	0.8 V	2.0 V	0.8 V					"	$\overline{G}$		0.4 V	"
	V_{OL2}	"	9	"	"	2.0 V	0.8 V	0.8 V	0.8 V						"	Cn+4		"	"
	V_{OL3}	"	10	"	"	0.8 V	2.0 V	0.8 V	0.8 V	0.8 V					"	$\overline{P}$		"	"
	V_{OL4}	"	11	"	0.8 V	2.0 V	"	2.0 V	2.0 V	2.0 V	2.0 V	16 mA			"	$\overline{F}$ 0		"	"
	V_{OL4}	"	12	"	"	"	"	"	"	"	"		16 mA		"	$\overline{F}$ 1		"	"
	V_{OL4}	"	13	"	"	"	"	"	"	"	"			16 mA	"	$\overline{F}$ 2		"	"
	V_{OL4}	"	14	"	"	"	"	"	"	"	"				"	$\overline{F}$ 3		"	"
	V_{OL5}	"	15	"	"	"	"	"	"	"	"				"	A = B		"	"
	I_{IL1}	3009	16	5.5 V	5.5 V	5.5 V	5.5 V	5.5 V	5.5 V	5.5 V	0.4 V				"	M	-0.7	-1.6	mA
	I_{IL2}	"	17	0.4 V	"	"	"	"	"	"	5.5 V				"	$\overline{B}$ 0	-2.1	-4.8	"
		"	18	5.5 V	"	"	"	"	"	"	"				"	$\overline{B}$ 1	"	"	"
		"	19	"	"	"	"	"	"	"	"				"	$\overline{B}$ 2	"	"	"
		"	20	"	"	"	"	"	"	GND	"				"	$\overline{B}$ 3	"	"	"
	I_{IL3}	"	21	"	"	"	"	"	0.4 V	5.5 V	"				"	S0	-2.8	-6.4	"
	I_{IL3}	"	22	"	"	0.4 V	"	"	5.5 V	5.5 V	"				"	S3	"	"	"
	I_{IL4}	"	23	GND	"	GND	"	0.4 V	GND	GND	GND				"	S1	"	"	"
	I_{IL4}	"	24	"	"	"	0.4 V	GND	"	GND	"				"	S2	"	"	"
	I_{IL5}	"	25	"	GND	"	GND	GND	"	0.4 V	"				"	Cn	-3.5	-8.0	"
	I_{IL6}	"	26	GND	0.4 V	5.5 V	5.5 V	5.5 V	5.5 V	5.5 V	5.5 V				"	$\overline{A}$ 0	-1.4	-3.2	"
		"	27	5.5 V	5.5 V	"	"	"	"	"	"				"	$\overline{A}$ 1	"	"	"
		"	28	"	"	"	"	"	"	"	"				"	$\overline{A}$ 2	"	"	"
		"	29	"	"	"	"	"	"	"	"				"	$\overline{A}$ 3	"	"	"
	I_{IH1}	3010	30	GND	GND	GND	GND	GND	GND	"	2.4 V				"	M		40	µA
	I_{IH2}	"	31	"	2.4 V	"	"	"	"	GND	GND				"	$\overline{A}$ 0		120	"
		"	32	"	GND	"	"	"	"	"	"				"	$\overline{A}$ 1		"	"
		"	33	"	"	"	"	"	"	"	"				"	$\overline{A}$ 2		"	"
		"	34	"	"	"	"	"	"	"	"				"	$\overline{A}$ 3		"	"
		"	35	2.4 V	"	"	"	"	"	"	"				"	$\overline{B}$ 0		"	"
		"	36	GND	"	"	"	"	"	"	"				"	$\overline{B}$ 1		"	"
		"	37	"	"	"	"	"	"	"	"				"	$\overline{B}$ 2		"	"
		"	38	"	"	"	"	"	"	5.5 V	"				"	$\overline{B}$ 3		"	"
	I_{IH3}	"	39	"	"	"	"	"	2.4 V	GND	"				"	S0		160	"
	I_{IH3}	"	40	"	"	2.4 V	"	"	GND	GND	"				"	S3		"	"
	I_{IH4}	"	41	5.5 V	"	GND	"	2.4 V	"	GND	"				"	S1		"	"
	I_{IH4}	"	42	5.5 V	"	GND	2.4 V	GND	"	GND	"				"	S2		"	"
	I_{IH5}	"	43	5.5 V	5.5 V	5.5 V	5.5 V	5.5 V	5.5 V	2.4 V	5.5 V				"	Cn		200	"
	I_{IH6}	"	44	GND	GND	GND	GND	GND	GND	GND	5.5 V				"	M		100	"

See notes at end of table for device type 01.

TABLE III. Group A inspection for device type 01. 1/

Subgroup	Symbol	MIL-STD-883 method	Case J, K, L, Z Test No.	13 $\overline{F}$ 3	14 A=B	15 $\overline{P}$	16 Cn+4	17 $\overline{G}$	18 $\overline{B}$ 3	19 $\overline{A}$ 3	20 $\overline{B}$ 2	21 $\overline{A}$ 2	22 $\overline{B}$ 1	23 $\overline{A}$ 1	24 V_{CC}	Meas. terminal	Test limits Min	Max	Unit
1	V_{OH1}	3006	1					-800µA	0.8 V	2.0 V	0.8 V	2.0 V	0.8 V	2.0 V	4.5 V	$\overline{G}$	2.4		V
T_C = 25°C	V_{OH2}	"	2				-800µA		2.0 V	0.8 V	2.0 V	"	2.0 V	"	"	Cn+4	"		"
	V_{OH3}	"	3			-800µA			"	2.0 V	2.0 V	"	2.0 V	"	"	$\overline{P}$	"		"
	V_{OH4}	"	4						"	0.8 V	2.0 V	"	2.0 V	"	"	$\overline{F}$ 0	"		"
	V_{OH4}	"	5						"	2.0 V	"	"	"	"	"	$\overline{F}$ 1	"		"
	V_{OH4}	"	6						"	"	"	"	"	"	"	$\overline{F}$ 2	"		"
	V_{OH4}	"	7	-800µA					"	"	"	"	"	"	"	$\overline{F}$ 3	"		"
	V_{OL1}	3007	8					16 mA	0.8 V	0.8 V	2.0 V	2.0 V	2.0 V	2.0 V	"	$\overline{G}$		0.4 V	"
	V_{OL2}	"	9				16 mA		0.8 V	2.0 V	0.8 V	"	0.8 V	2.0 V	"	Cn+4		"	"
	V_{OL3}	"	10			16 mA			2.0 V	"	2.0 V	"	2.0 V	2.0 V	"	$\overline{P}$		"	"
	V_{OL4}	"	11						2.0 V	"	2.0 V	"	2.0 V	2.0 V	"	$\overline{F}$ 0		"	"
	V_{OL4}	"	12						"	"	"	"	"	0.8 V	"	$\overline{F}$ 1		"	"
	V_{OL4}	"	13						"	"	"	0.8 V	"	2.0 V	"	$\overline{F}$ 2		"	"
	V_{OL4}	"	14	16 mA					"	0.8 V	"	2.0 V	"	2.0 V	"	$\overline{F}$ 3		"	"
	V_{OL5}	"	15		16 mA				"	2.0 V	"	2.0 V	"	2.0 V	"	A = B		"	"
	I_{IL1}	3009	16						5.5 V	5.5 V	5.5 V	5.5 V	5.5 V	5.5 V	5.5 V	M	-0.7	-1.6	mA
	I_{IL2}	"	17						5.5 V	5.5 V	"	"	5.5 V	"	"	$\overline{B}$ 0	-2.1	-4.8	"
		"	18						"	"	"	"	0.4 V	"	"	$\overline{B}$ 1	"	"	"
		"	19						"	"	0.4 V	"	5.5 V	"	"	$\overline{B}$ 2	"	"	"
		"	20						0.4 V	"	5.5 V	"	"	"	"	$\overline{B}$ 3	"	"	"
	I_{IL3}	"	21						5.5 V	"	"	"	"	"	"	S0	-2.8	-6.4	"
	I_{IL3}	"	22						5.5 V	"	"	"	"	"	"	S3	"	"	"
	I_{IL4}	"	23						GND	"	GND	"	GND	"	"	S1	"	"	"
	I_{IL4}	"	24						"	"	"	"	"	"	"	S2	"	"	"
	I_{IL5}	"	25						"	GND	"	GND	"	GND	"	Cn	-3.5	-8.0	"
	I_{IL6}	"	26						5.5 V	5.5 V	5.5 V	5.5 V	5.5 V	5.5 V	"	$\overline{A}$ 0	-1.4	-3.2	"
		"	27						"	"	"	"	GND	0.4 V	"	$\overline{A}$ 1	"	"	"
		"	28						"	"	GND	0.4 V	5.5 V	5.5 V	"	$\overline{A}$ 2	"	"	"
		"	29						GND	0.4 V	5.5 V	5.5 V	5.5 V	5.5 V	"	$\overline{A}$ 3	"	"	"
	I_{IH1}	3010	30						GND	GND	GND	GND	GND	GND	"	M		40	µA
	I_{IH2}	"	31						"	"	"	"	"	GND	"	$\overline{A}$ 0		120	"
		"	32						"	"	"	"	"	2.4 V	"	$\overline{A}$ 1		"	"
		"	33						"	"	"	2.4 V	"	GND	"	$\overline{A}$ 2		"	"
		"	34						"	2.4 V	"	GND	"	"	"	$\overline{A}$ 3		"	"
		"	35						"	GND	"	"	"	"	"	$\overline{B}$ 0		"	"
		"	36						"	"	"	"	2.4 V	"	"	$\overline{B}$ 1		"	"
		"	37						"	"	2.4 V	"	GND	"	"	$\overline{B}$ 2		"	"
		"	38						2.4 V	"	GND	"	"	"	"	$\overline{B}$ 3		"	"
	I_{IH3}	"	39						GND	"	"	"	"	"	"	S0		160	"
	I_{IH3}	"	40						GND	"	"	"	"	"	"	S3		"	"
	I_{IH4}	"	41						5.5 V	"	5.5 V	"	5.5 V	"	"	S1		"	"
	I_{IH4}	"	42						5.5 V	"	5.5 V	"	5.5 V	"	"	S2		"	"
	I_{IH5}	"	43						5.5 V	5.5 V	5.5 V	5.5 V	5.5 V	5.5 V	"	Cn		200	"
	I_{IH6}	"	44						GND	GND	GND	GND	GND	GND	"	M		100	"

See notes at end of table for device type 01.

TABLE III. Group A inspection for device type 01 - Continued. 1/

Subgroup	Symbol	MIL-STD-883 method	Case J, K, L, Z Test No.	1 $\overline{B}$ 0	2 $\overline{A}$ 0	3 S3	4 S2	5 S1	6 S0	7 Cn	8 M	9 $\overline{F}$ 0	10 $\overline{F}$ 1	11 $\overline{F}$ 2	12 GND	Meas. terminal	Test limits Min	Max	Unit
1	I_{IH7}	3010	45	GND	5.5 V	GND	GND	GND	GND	GND	GND				GND	$\overline{A}$ 0		300	µA
T_C = 25°C		"	46	"	GND	"	"	"	"	"	"				"	$\overline{A}$ 1		"	"
		"	47	"	"	"	"	"	"	"	"				"	$\overline{A}$ 2		"	"
		"	48	"	"	"	"	"	"	"	"				"	$\overline{A}$ 3		"	"
		"	49	5.5 V	"	"	"	"	"	"	"				"	$\overline{B}$ 0		"	"
		"	50	GND	"	"	"	"	"	"	"				"	$\overline{B}$ 1		"	"
		"	51	"	"	"	"	"	"	"	"				"	$\overline{B}$ 2		"	"
		"	52	"	"	"	"	"	"	"	"				"	$\overline{B}$ 3		"	"
	I_{IH8}	"	53	"	"	"	"	"	5.5 V	"	"				"	S0		400	"
	I_{IH8}	"	54	"	"	5.5 V	"	"	GND	"	"				"	S3		"	"
	I_{IH9}	"	55	5.5 V	"	GND	"	5.5 V	"	"	"				"	S2		"	"
	I_{IH9}	"	56	"	"	GND	5.5 V	GND	"	"	"				"	S1		"	"
	I_{IH10}	"	57	"	5.5 V	5.5 V	5.5 V	5.5 V	5.5 V	5.5 V	5.5 V				"	Cn		500	"
	I_{OS1}	3011	58	GND	GND	5.5 V	GND	GND	GND	GND	GND				"	$\overline{G}$	-20	-55	mA
	I_{OS2}	"	59	GND	GND	GND	GND	GND	GND	GND	GND				"	Cn+4	"	"	"
	I_{OS3}	"	60	5.5 V	5.5 V	5.5 V	5.5 V	5.5 V	5.5 V	5.5 V	5.5 V				"	$\overline{P}$	"	"	"
		"	61	"	"	"	"	"	"	"	"	GND			"	$\overline{F}$ 0	"	"	"
		"	62	"	"	"	"	"	"	"	"		GND		"	$\overline{F}$ 1	"	"	"
		"	63	"	"	"	"	"	"	"	"			GND	"	$\overline{F}$ 2	"	"	"
		"	64	"	"	"	"	"	"	"	"				"	$\overline{F}$ 3	"	"	"
	I_{CCL1}	3005	65	GND	"	"	"	"	"	GND	"				"	V_{CC}		127	"
	I_{CCH1}	3005	66	GND	GND	"	"	"	"	GND	5.5 V				"	V_{CC}		135	"
	V_{IC}		67	-12mA											"	$\overline{B}$ 0		-1.5	V
			68		-12mA										"	$\overline{A}$ 0		"	"
			69			-12mA									"	S3		"	"
			70				-12mA								"	S2		"	"
			71					-12mA							"	S1		"	"
			72						-12mA						"	S0		"	"
			73							-12mA					"	Cn		"	"
			74								-12mA				"	M		"	"
			75												"	$\overline{B}$ 3		"	"
			76												"	$\overline{A}$ 3		"	"
			77												"	$\overline{B}$ 2		"	"
			78												"	$\overline{A}$ 2		"	"
			79												"	$\overline{B}$ 1		"	"
			80												"	$\overline{A}$ 1		"	"
	I_{CEX}		81		2.0 V	2.0 V	2.0 V	2.0 V	2.0 V		2.0 V				"	A = B		250	µA
2	Same tests, terminal conditions and limits as for subgroup 1, except T_C = 125°C, and V_{IC} tests are omitted.																		
3	Same tests, terminal conditions and limits as for subgroup 1, except T_C = -55°C, and V_{IC} tests are omitted.																		
7 2/ 3/			82	B	B	B	B	B	B	B	B	H 4/	L 4/	L 4/	GND	All	H or L		
T_C = 25°C			83	B	B	B	A	"	A	A	A	"	H	H	"	output	as shown 4/		
			84	B	B	A	A	"	B	A	A	"	H	H	"				
			85	A	A	A	B	"	A	B	B	"	L	L	"				
			86	B	A	B	A	B	"	B	"	H	H	L	"				
			87	B	B	A	A	A	"	B	"	L	L	L	"				

See notes at end of table for device type 01.

TABLE III. Group A inspection for device type 01 - Continued. 1/

Subgroup	Symbol	MIL-STD-883 method	Case J, K, L, Z Test No.	13 $\overline{F}$ 3	14 A=B	15 $\overline{P}$	16 Cn+4	17 $\overline{G}$	18 $\overline{B}$ 3	19 $\overline{A}$ 3	20 $\overline{B}$ 2	21 $\overline{A}$ 2	22 $\overline{B}$ 1	23 $\overline{A}$ 1	24 V_{CC}	Meas. terminal	Test limits Min	Test limits Max	Test limits Unit
1	I_{IH7}	3010	45						GND	GND	GND	GND	GND	GND	5.5 V	$\overline{A}$ 0		300	µA
T_C = 25°C		"	46						"	"	"	GND	"	5.5 V	"	$\overline{A}$ 1		"	"
		"	47						"	"	"	5.5 V	"	GND	"	$\overline{A}$ 2		"	"
		"	48						"	5.5 V	"	GND	"	"	"	$\overline{A}$ 3		"	"
		"	49						"	GND	"	"	"	"	"	$\overline{B}$ 0		"	"
		"	50						"	"	"	"	5.5 V	"	"	$\overline{B}$ 1		"	"
		"	51						"	"	5.5 V	"	GND	"	"	$\overline{B}$ 2		"	"
		"	52						5.5 V	"	GND	"	"	"	"	$\overline{B}$ 3		"	"
	I_{IH8}	"	53						GND	"	"	"	"	"	"	S0		400	"
	I_{IH8}	"	54						GND	"	"	"	"	"	"	S3		"	"
	I_{IH9}	"	55						5.5 V	"	5.5 V	"	5.5 V	"	"	S2		"	"
	I_{IH9}	"	56						"	"	"	"	"	"	"	S1		"	"
	I_{IH10}	"	57						"	5.5 V	"	5.5 V	"	5.5 V	"	Cn		500	"
	I_{OS1}	3011	58					GND	5.5 V	5.5 V	GND	GND	GND	GND	"	$\overline{G}$	-20	-55	mA
	I_{OS2}	"	59				GND		GND	GND	GND	GND	GND	GND	"	Cn+4	"	"	"
	I_{OS3}	"	60			GND			5.5 V	5.5 V	5.5 V	5.5 V	5.5 V	5.5 V	"	$\overline{P}$	"	"	"
		"	61						"	"	"	"	"	"	"	$\overline{F}$ 0	"	"	"
		"	62						"	"	"	"	"	"	"	$\overline{F}$ 1	"	"	"
		"	63						"	"	"	"	"	"	"	$\overline{F}$ 2	"	"	"
		"	64	GND					"	"	"	"	"	"	"	$\overline{F}$ 3	"	"	"
	I_{CCL1}	3005	65						GND	5.5 V	GND	5.5 V	GND	5.5 V	"	V_{CC}		127	"
	I_{CCH1}	3005	66						GND	GND	GND	GND	GND	GND	"	V_{CC}		135	"
	V_{IC}		67												4.5 V	$\overline{B}$ 0		-1.5	V
			68												"	$\overline{A}$ 0		"	"
			69												"	S3		"	"
			70												"	S2		"	"
			71												"	S1		"	"
			72												"	S0		"	"
			73												"	Cn		"	"
			74												"	M		"	"
			75						-12mA						"	$\overline{B}$ 3		"	"
			76							-12mA					"	$\overline{A}$ 3		"	"
			77								-12mA				"	$\overline{B}$ 2		"	"
			78									-12mA			"	$\overline{A}$ 2		"	"
			79										-12mA		"	$\overline{B}$ 1		"	"
			80											-12mA	"	$\overline{A}$ 1		"	"
	I_{CEX}		81		5.5 V					2.0 V		2.0 V		2.0 V	"	A = B		250	µA
	Same tests, terminal conditions and limits as for subgroup 1, except T_C = 125°C, and V_{IC} tests are omitted.																		
	Same tests, terminal conditions and limits as for subgroup 1, except T_C = -55°C, and V_{IC} tests are omitted.																		
7 2/ 3/ T_C = 25°C			82	L 4/	L 4/	L 4/	H 4/	L 4/	B	B	B	B	B	B	4.5 V	All output	H or L as shown 4/		
			83	H	H	L	H	L	B	B	B	"	"	B	"				
			84	H	H	H	L	H	B	A	B	"	"	B	"				
			85	L	L	H	"	"	A	B	A	B	"	A	"				
			86	"	"	H	"	"	A	"	B	A	B	B	"				
			87	"	"	L	L	H	A	"	A	B	A	B	"				

See notes at end of table for device type 01.

TABLE III. Group A inspection for device type 01 - Continued. 1/

Subgroup	Symbol	MIL-STD-883 method	Case J, K, L, Z Test No.	1 $\overline{B}$ 0	2 $\overline{A}$ 0	3 S3	4 S2	5 S1	6 S0	7 Cn	8 M	9 $\overline{F}$ 0	10 $\overline{F}$ 1	11 $\overline{F}$ 2	12 GND	Meas. terminal	Test limits Min	Max	Unit
7 2/ 3/ T_C = 25°C			88	A	B	A	A	B	A	A	B	H	H	L	GND	All output	H or L as shown 4/		
			89	B	B	A	B	B	B	A	A	H	H	H	"				
			90	"	B	A	A	B	"	A	B	L	L	"	"				
			91	"	A	A	A	A	"	B	B	H	H	"	"				
			92	"	B	B	A	B	"	A	A	H	H	"	"				
			93	"	B	A	B	"	A	B	B	H	H	L	"				
			94	"	A	A	A	"	A	A	"	L	L	H	"				
			95	"	B	A	"	"	B	A	"	L	L	"	"				
			96	"	A	B	"	"	A	B	"	H	H	"	"				
			97	"	B	B	"	"	A	A	"	L	H	"	"				
			98	"	A	A	"	"	A	A	"	L	L	L	"				
			99	"	A	B	"	A	B	B	"	H	H	H	"				
			100	"	A	A	"	A	A	B	"	H	L	L	"				
			101	"	B	B	"	B	B	A	"	L	"	L	"				
			102	"	B	A	"	B	A	"	"	L	"	L	"				
			103	"	B	"	B	B	"	"	"	L	"	H	"				
			104	"	A	"	A	A	"	"	"	L	"	L	"				
			105	A	B	"	B	B	"	"	"	H	H	H	"				
			106	B	B	"	A	"	"	"	"	L	L	L	"				
			107	A	A	B	A	"	B	"	"	H	H	H	"				
			108	B	B	A	B	"	B	"	A	"	"	"	"				
			109	B	A	B	"	"	A	"	B	"	"	"	"				
			110	A	B	A	"	"	B	B	A	"	"	"	"				
			111	B	A	"	"	A	A	A	A	L	"	L	"				
			112	B	A	"	A	A	B	B	A	H	L	L	"				
			113	A	B	"	A	A	B	A	B	L	L	L	"				
			114	B	B	B	B	B	B	B	B	H	H	H	"				
			115	B	A	A	A	A	A	B	A	H	L	H	"				
8 2/ 3/	Same tests, terminal conditions and limits as for subgroup 7, except T_C = 125°C and -55°C.																		
9	t_{PHL1}	3003	116	4.5 V	IN	4.5 V	GND	GND	4.5 V	GND	GND	OUT			GND	$\overline{A}0$ to $\overline{F}0$	7	38	ns
T_C = 25°C		(Fig 4)	117	"	4.5 V	"	"	"	"	"	"		OUT		"	$\overline{A}1$ to $\overline{F}1$	"	"	"
		"	118	"	"	"	"	"	"	"	"			OUT	"	$\overline{A}2$ to $\overline{F}2$	"	"	"
		"	119	"	"	"	"	"	"	"	"				"	$\overline{A}3$ to $\overline{F}3$	"	"	"
		"	120	IN	"	"	"	"	"	"	"	OUT			"	$\overline{B}0$ to $\overline{F}0$	"	"	"
		"	121	4.5 V	"	"	"	"	"	"	"		OUT		"	$\overline{B}1$ to $\overline{F}1$	"	"	"
		"	122	"	"	"	"	"	"	"	"			OUT	"	$\overline{B}2$ to $\overline{F}2$	"	"	"
		"	123	"	"	"	"	"	"	"	"				"	$\overline{B}3$ to $\overline{F}3$	"	"	"
	t_{PLH1}	"	124	4.5 V	IN	4.5 V	GND	GND	4.5 V	GND	GND	OUT			"	$\overline{A}0$ to $\overline{F}0$	7	50	"
		"	125	"	4.5 V	"	"	"	"	"	"		OUT		"	$\overline{A}1$ to $\overline{F}1$	"	"	"
		"	126	"	"	"	"	"	"	"	"			OUT	"	$\overline{A}2$ to $\overline{F}2$	"	"	"
		"	127	"	"	"	"	"	"	"	"				"	$\overline{A}3$ to $\overline{F}3$	"	"	"
		"	128	IN	"	"	"	"	"	"	"	OUT			"	$\overline{B}0$ to $\overline{F}0$	"	"	"
		"	129	4.5 V	"	"	"	"	"	"	"		OUT		"	$\overline{B}1$ to $\overline{F}1$	"	"	"
		"	130	"	"	"	"	"	"	"	"			OUT	"	$\overline{B}2$ to $\overline{F}2$	"	"	"
		"	131	"	"	"	"	"	"	"	"				"	$\overline{B}3$ to $\overline{F}3$	"	"	"

See notes at end of table for device type 01.

TABLE III. Group A inspection for device type 01 - Continued. 1/

Subgroup	Symbol	MIL-STD-883 method	Case J, K, L, Z Test No.	13 $\overline{F}$ 3	14 A=B	15 $\overline{P}$	16 Cn+4	17 $\overline{G}$	18 $\overline{B}$ 3	19 $\overline{A}$ 3	20 $\overline{B}$ 2	21 $\overline{A}$ 2	22 $\overline{B}$ 1	23 $\overline{A}$ 1	24 V_{CC}	Meas terminal	Test limits Min	Max	Unit
7 2/ 3/ T_C = 25°C			88	L	L	L	H	L	B	B	B	B	A	B	4.5 V	All output	H or L as shown 4/		
			89	L	L	L	"	"	"	A	B	B	B	B	"				
			90	H	L	H	"	"	"	B	B	A	"	A	"				
			91	H	H	H	"	"	"	B	A	B	"	A	"				
			92	L	L	L	"	"	A	A	B	"	"	B	"				
			93	H	"	L	"	"	A	B	"	"	A	B	"				
			94	L	"	H	"	"	B	"	"	"	A	B	"				
			95	L	"	H	"	"	A	"	"	"	B	A	"				
			96	H	H	H	"	"	A	"	A	"	B	B	"				
			97	"	L	L	"	"	A	A	A	A	A	A	"				
			98	"	L	H	"	"	B	B	A	B	A	B	"				
			99	"	H	"	"	"	B	"	B	B	A	"	"				
			100	L	L	"	L	H	A	"	A	B	B	"	"				
			101	H	"	"	H	L	B	"	B	A	B	"	"				
			102	H	"	"	H	L	B	"	A	B	A	A	"				
			103	H	"	L	H	L	A	"	B	A	B	B	"				
			104	L	"	H	L	H	"	"	A	B	A	"	"				
			105	H	H	L	H	"	"	"	"	B	A	"	"				
			106	L	L	H	L	"	"	"	"	A	B	"	"				
			107	H	H	L	H	"	"	A	"	A	A	A	"				
			108	"	H	H	L	"	"	A	B	B	B	B	"				
			109	"	H	L	H	"	"	B	A	B	A	B	"				
			110	"	H	H	L	"	"	A	A	A	B	B	"				
			111	"	L	"	L	"	"	A	A	B	A	A	"				
			112	"	"	"	H	L	"	B	B	B	B	B	"				
			113	L	"	"	L	H	B	B	"	B	A	A	"				
			114	L	"	L	H	L	B	B	"	A	B	A	"				
			115	H	"	H	L	H	B	A	"	A	B	B	"				
8 2/ 3/	Same tests, terminal conditions and limits as for subgroup 7, except T_C = 125°C and -55°C.																		
9 T_C = 25°C	t_{PHL1}	3003 (Fig 4)	116						4.5 V	4.5 V	4.5 V	4.5 V	4.5 V	4.5 V	5.0 V	$\overline{A}0$ to $\overline{F}0$	7	38	ns
			117						"	"	"	4.5 V	"	IN	"	$\overline{A}1$ to $\overline{F}1$	"	"	"
			118						"	"	"	IN	"	4.5 V	"	$\overline{A}2$ to $\overline{F}2$	"	"	"
			119	OUT					"	IN	"	4.5 V	"	"	"	$\overline{A}3$ to $\overline{F}3$	"	"	"
			120						"	4.5 V	"	"	"	"	"	$\overline{B}0$ to $\overline{F}0$	"	"	"
			121						"	"	"	"	IN	"	"	$\overline{B}1$ to $\overline{F}1$	"	"	"
			122						"	"	IN	"	4.5 V	"	"	$\overline{B}2$ to $\overline{F}2$	"	"	"
			123	OUT					IN	"	4.5 V	"	4.5 V	"	"	$\overline{B}3$ to $\overline{F}3$	"	"	"
	t_{PLH1}	"	124						4.5 V	4.5 V	4.5 V	4.5 V	4.5 V	4.5 V	"	$\overline{A}0$ to $\overline{F}0$	7	50	ns
			125						"	"	"	4.5 V	"	IN	"	$\overline{A}1$ to $\overline{F}1$	"	"	"
			126						"	"	"	IN	"	4.5 V	"	$\overline{A}2$ to $\overline{F}2$	"	"	"
			127	OUT					"	IN	"	4.5 V	"	"	"	$\overline{A}3$ to $\overline{F}3$	"	"	"
			128						"	4.5 V	"	"	"	"	"	$\overline{B}0$ to $\overline{F}0$	"	"	"
			129						"	"	"	"	IN	"	"	$\overline{B}1$ to $\overline{F}1$	"	"	"
			130						"	"	IN	"	4.5 V	"	"	$\overline{B}2$ to $\overline{F}2$	"	"	"
			131	OUT					IN	"	4.5 V	"	4.5 V	"	"	$\overline{B}3$ to $\overline{F}3$	"	"	"

See notes at end of table for device type 01.

TABLE III. Group A inspection for device type 01 - Continued. 1/

Subgroup	Symbol	MIL-STD-883 method	Case J, K, L, Z Test No.	1 $\overline{B}$ 0	2 $\overline{A}$ 0	3 S3	4 S2	5 S1	6 S0	7 Cn	8 M	9 $\overline{F}$ 0	10 $\overline{F}$ 1	11 $\overline{F}$ 2	12 GND	Meas terminal	Test limits Min	Max	Unit
9	t_{PHL2}	3003	132	GND	IN	GND	4.5 V	4.5 V	GND	GND	GND	OUT			GND	$\overline{A}0$ to $\overline{F}0$	7	40	ns
T_C = 25°C		(Fig 4)	133	"	4.5 V	"	"	"	"	"	"		OUT		"	$\overline{A}1$ to $\overline{F}1$	"	"	"
		"	134	"	"	"	"	"	"	"	"			OUT	"	$\overline{A}2$ to $\overline{F}2$	"	"	"
		"	135	"	"	"	"	"	"	"	"				"	$\overline{A}3$ to $\overline{F}3$	"	"	"
		"	136	IN	"	"	"	"	"	"	"	OUT			"	$\overline{B}0$ to $\overline{F}0$	"	"	"
		"	137	GND	"	"	"	"	"	"	"		OUT		"	$\overline{B}1$ to $\overline{F}1$	"	"	"
		"	138	"	"	"	"	"	"	"	"			OUT	"	$\overline{B}2$ to $\overline{F}2$	"	"	"
		"	139	"	"	"	"	"	"	"	"				"	$\overline{B}3$ to $\overline{F}3$	"	"	"
	t_{PLH2}	"	140	GND	IN	GND	4.5 V	4.5 V	GND	GND	GND	OUT			"	$\overline{A}0$ to $\overline{F}0$	7	56	ns
		"	141	"	4.5 V	"	"	"	"	"	"		OUT		"	$\overline{A}1$ to $\overline{F}1$	"	"	"
		"	142	"	"	"	"	"	"	"	"			OUT	"	$\overline{A}2$ to $\overline{F}2$	"	"	"
		"	143	"	"	"	"	"	"	"	"				"	$\overline{A}3$ to $\overline{F}3$	"	"	"
		"	144	IN	"	"	"	"	"	"	"	OUT			"	$\overline{B}0$ to $\overline{F}0$	"	"	"
		"	145	GND	"	"	"	"	"	"	"		OUT		"	$\overline{B}1$ to $\overline{F}1$	"	"	"
		"	146	"	"	"	"	"	"	"	"			OUT	"	$\overline{B}2$ to $\overline{F}2$	"	"	"
		"	147	"	"	"	"	"	"	"	"				"	$\overline{B}3$ to $\overline{F}3$	"	"	"
	t_{PHL3}	"	148	4.5 V	IN	4.5 V	GND	GND	4.5 V	GND	GND				"	$\overline{A}0$ to $\overline{P}$	7	29	ns
		"	149	GND	GND	"	"	"	"	"	"				"	$\overline{A}1$ to $\overline{P}$	"	"	"
		"	150	"	"	"	"	"	"	"	"				"	$\overline{A}2$ to $\overline{P}$	"	"	"
		"	151	"	"	"	"	"	"	"	"				"	$\overline{A}3$ to $\overline{P}$	"	"	"
		"	152	IN	4.5 V	"	"	"	"	"	"				"	$\overline{B}0$ to $\overline{P}$	"	"	"
		"	153	GND	GND	"	"	"	"	"	"				"	$\overline{B}1$ to $\overline{P}$	"	"	"
		"	154	"	"	"	"	"	"	"	"				"	$\overline{B}2$ to $\overline{P}$	"	"	"
		"	155	"	"	"	"	"	"	"	"				"	$\overline{B}3$ to $\overline{P}$	"	"	"
	t_{PLH3}	"	156	4.5 V	IN	4.5 V	GND	GND	4.5 V	GND	GND				"	$\overline{A}0$ to $\overline{P}$	7	23	ns
		"	157	GND	GND	"	"	"	"	"	"				"	$\overline{A}1$ to $\overline{P}$	"	"	"
		"	158	"	"	"	"	"	"	"	"				"	$\overline{A}2$ to $\overline{P}$	"	"	"
		"	159	"	"	"	"	"	"	"	"				"	$\overline{A}3$ to $\overline{P}$	"	"	"
		"	160	IN	4.5 V	"	"	"	"	"	"				"	$\overline{B}0$ to $\overline{P}$	"	"	"
		"	161	GND	GND	"	"	"	"	"	"				"	$\overline{B}1$ to $\overline{P}$	"	"	"
		"	162	"	"	"	"	"	"	"	"				"	$\overline{B}2$ to $\overline{P}$	"	"	"
		"	163	"	"	"	"	"	"	"	"				"	$\overline{B}3$ to $\overline{P}$	"	"	"

See notes at end of table for device type 01.

TABLE III. Group A inspection for device type 01 - Continued. 1/

Subgroup	Symbol	MIL-STD-883 method	Case J, K, L, Z Test No.	13 $\overline{F}$ 3	14 A=B	15 $\overline{P}$	16 Cn+4	17 $\overline{G}$	18 $\overline{B}$ 3	19 $\overline{A}$ 3	20 $\overline{B}$ 2	21 $\overline{A}$ 2	22 $\overline{B}$ 1	23 $\overline{A}$ 1	24 V_{CC}	Meas terminal	Test limits Min	Max	Unit
9	t_{PHL2}	3003	132						GND	4.5 V	GND	4.5 V	GND	4.5 V	5.0 V	$\overline{A}0$ to $\overline{F}0$	7	40	ns
T_C = 25°C		(Fig 4)	133						"	"	"	4.5 V	"	IN	"	$\overline{A}1$ to $\overline{F}1$	"	"	"
		"	134						"	"	"	IN	"	4.5 V	"	$\overline{A}2$ to $\overline{F}2$	"	"	"
		"	135	OUT					"	IN	"	4.5 V	"	"	"	$\overline{A}3$ to $\overline{F}3$	"	"	"
		"	136						"	4.5 V	"	"	"	"	"	$\overline{B}0$ to $\overline{F}0$	"	"	"
		"	137						"	"	"	"	IN	"	"	$\overline{B}1$ to $\overline{F}1$	"	"	"
		"	138						"	"	IN	"	GND	"	"	$\overline{B}2$ to $\overline{F}2$	"	"	"
		"	139	OUT					IN	"	GND	"	GND	"	"	$\overline{B}3$ to $\overline{F}3$	"	"	"
	t_{PLH2}	"	140						GND	4.5 V	GND	4.5 V	GND	4.5 V	"	$\overline{A}0$ to $\overline{F}0$	7	56	ns
		"	141						"	"	"	4.5 V	"	IN	"	$\overline{A}1$ to $\overline{F}1$	"	"	"
		"	142						"	"	"	IN	"	4.5 V	"	$\overline{A}2$ to $\overline{F}2$	"	"	"
		"	143	OUT					"	IN	"	4.5 V	"	"	"	$\overline{A}3$ to $\overline{F}3$	"	"	"
		"	144						"	4.5 V	"	"	"	"	"	$\overline{B}0$ to $\overline{F}0$	"	"	"
		"	145						"	"	"	"	IN	"	"	$\overline{B}1$ to $\overline{F}1$	"	"	"
		"	146						"	"	IN	"	GND	"	"	$\overline{B}2$ to $\overline{F}2$	"	"	"
		"	147	OUT					IN	"	GND	"	GND	"	"	$\overline{B}3$ to $\overline{F}3$	"	"	"
	t_{PHL3}	"	148			OUT			GND	GND	GND	GND	GND	GND	"	$\overline{A}0$ to $\overline{P}$	7	29	ns
		"	149			"			"	"	GND	GND	4.5 V	IN	"	$\overline{A}1$ to $\overline{P}$	"	"	"
		"	150			"			"	"	4.5 V	IN	GND	GND	"	$\overline{A}2$ to $\overline{P}$	"	"	"
		"	151			"			4.5 V	IN	GND	GND	GND	GND	"	$\overline{A}3$ to $\overline{P}$	"	"	"
		"	152			"			GND	GND	GND	GND	GND	GND	"	$\overline{B}0$ to $\overline{P}$	"	"	"
		"	153			"			"	"	GND	GND	IN	4.5 V	"	$\overline{B}1$ to $\overline{P}$	"	"	"
		"	154			"			"	"	IN	4.5 V	GND	GND	"	$\overline{B}2$ to $\overline{P}$	"	"	"
		"	155			"			IN	4.5 V	GND	GND	GND	GND	"	$\overline{B}3$ to $\overline{P}$	"	"	"
	t_{PLH3}	"	156			OUT			GND	GND	GND	GND	GND	GND	"	$\overline{A}0$ to $\overline{P}$	7	23	ns
		"	157			"			"	"	GND	GND	4.5 V	IN	"	$\overline{A}1$ to $\overline{P}$	"	"	"
		"	158			"			"	"	4.5 V	IN	GND	GND	"	$\overline{A}2$ to $\overline{P}$	"	"	"
		"	159			"			4.5 V	IN	GND	GND	GND	GND	"	$\overline{A}3$ to $\overline{P}$	"	"	"
		"	160			"			GND	GND	GND	GND	GND	GND	"	$\overline{B}0$ to $\overline{P}$	"	"	"
		"	161			"			"	"	GND	GND	IN	4.5 V	"	$\overline{B}1$ to $\overline{P}$	"	"	"
		"	162			"			"	"	IN	4.5 V	GND	GND	"	$\overline{B}2$ to $\overline{P}$	"	"	"
		"	163			"			IN	4.5 V	GND	GND	GND	GND	"	$\overline{B}3$ to $\overline{P}$	"	"	"

See notes at end of table for device type 01.

TABLE III. Group A inspection for device type 01 - Continued. 1/

Subgroup	Symbol	MIL-STD-883 method	Case J, K, L, Z Test No.	1 $\overline{B}$ 0	2 $\overline{A}$ 0	3 S3	4 S2	5 S1	6 S0	7 Cn	8 M	9 $\overline{F}$ 0	10 $\overline{F}$ 1	11 $\overline{F}$ 2	12 GND	Meas terminal	Test limits Min	Test limits Max	Test limits Unit
9	t_{PHL4}	3003	164	GND	IN	GND	4.5 V	4.5 V	GND	GND	GND				GND	$\overline{A}$0 to $\overline{P}$	7	30	ns
T_C = 25°C		(Fig 4)	165	"	GND	"	"	"	"	"	"				"	$\overline{A}$1 to $\overline{P}$	"	"	"
		"	166	"	"	"	"	"	"	"	"				"	$\overline{A}$2 to $\overline{P}$	"	"	"
		"	167	"	"	"	"	"	"	"	"				"	$\overline{A}$3 to $\overline{P}$	"	"	"
		"	168	IN	4.5 V	"	"	"	"	"	"				"	$\overline{B}$0 to $\overline{P}$	"	"	"
		"	169	GND	GND	"	"	"	"	"	"				"	$\overline{B}$1 to $\overline{P}$	"	"	"
		"	170	"	"	"	"	"	"	"	"				"	$\overline{B}$2 to $\overline{P}$	"	"	"
		"	171	"	"	"	"	"	"	"	"				"	$\overline{B}$3 to $\overline{P}$	"	"	"
	t_{PLH4}	"	172	GND	IN	GND	4.5 V	4.5 V	GND	GND	GND				"	$\overline{A}$0 to $\overline{P}$	7	30	ns
		"	173	"	GND	"	"	"	"	"	"				"	$\overline{A}$1 to $\overline{P}$	"	"	"
		"	174	"	"	"	"	"	"	"	"				"	$\overline{A}$2 to $\overline{P}$	"	"	"
		"	175	"	"	"	"	"	"	"	"				"	$\overline{A}$3 to $\overline{P}$	"	"	"
		"	176	IN	4.5 V	"	"	"	"	"	"				"	$\overline{B}$0 to $\overline{P}$	"	"	"
		"	177	GND	GND	"	"	"	"	"	"				"	$\overline{B}$1 to $\overline{P}$	"	"	"
		"	178	"	"	"	"	"	"	"	"				"	$\overline{B}$2 to $\overline{P}$	"	"	"
		"	179	"	"	"	"	"	"	"	"				"	$\overline{B}$3 to $\overline{P}$	"	"	"
	t_{PHL5}	"	180	GND	IN	4.5 V	GND	GND	4.5 V	GND	GND				"	$\overline{A}$0 to $\overline{G}$	7	25	ns
		"	181	4.5 V	GND	"	"	"	"	"	"				"	$\overline{A}$1 to $\overline{G}$	"	"	"
		"	182	"	"	"	"	"	"	"	"				"	$\overline{A}$2 to $\overline{G}$	"	"	"
		"	183	"	"	"	"	"	"	"	"				"	$\overline{A}$3 to $\overline{G}$	"	"	"
		"	184	IN	"	"	"	"	"	"	"				"	$\overline{B}$0 to $\overline{G}$	"	"	"
		"	185	4.5 V	"	"	"	"	"	"	"				"	$\overline{B}$1 to $\overline{G}$	"	"	"
		"	186	"	"	"	"	"	"	"	"				"	$\overline{B}$2 to $\overline{G}$	"	"	"
		"	187	"	"	"	"	"	"	"	"				"	$\overline{B}$3 to $\overline{G}$	"	"	"
	t_{PLH5}	"	188	GND	IN	4.5 V	GND	GND	4.5 V	GND	GND				"	$\overline{A}$0 to $\overline{G}$	7	25	ns
		"	189	4.5 V	GND	"	"	"	"	"	"				"	$\overline{A}$1 to $\overline{G}$	"	"	"
		"	190	"	"	"	"	"	"	"	"				"	$\overline{A}$2 to $\overline{G}$	"	"	"
		"	191	"	"	"	"	"	"	"	"				"	$\overline{A}$3 to $\overline{G}$	"	"	"
		"	192	IN	"	"	"	"	"	"	"				"	$\overline{B}$0 to $\overline{G}$	"	"	"
		"	193	4.5 V	"	"	"	"	"	"	"				"	$\overline{B}$1 to $\overline{G}$	"	"	"
		"	194	"	"	"	"	"	"	"	"				"	$\overline{B}$2 to $\overline{G}$	"	"	"
		"	195	"	"	"	"	"	"	"	"				"	$\overline{B}$3 to $\overline{G}$	"	"	"

See notes at end of table for device type 01.

TABLE III. Group A inspection for device type 01 - Continued. 1/

Subgroup	Symbol	MIL-STD-883 method	Case J, K, L, Z Test No.	13 $\overline{F}$ 3	14 A=B	15 $\overline{P}$	16 Cn+4	17 $\overline{G}$	18 $\overline{B}$ 3	19 $\overline{A}$ 3	20 $\overline{B}$ 2	21 $\overline{A}$ 2	22 $\overline{B}$ 1	23 $\overline{A}$ 1	24 V_{CC}	Meas terminal	Test limits Min	Test limits Max	Test limits Unit
9	t_{PHL4}	3003	164			OUT			GND	GND	GND	GND	GND	GND	5.0 V	$\overline{A}0$ to $\overline{P}$	7	30	ns
T_C = 25°C		(Fig 4)	165			"			"	"	"	GND	"	IN	"	$\overline{A}1$ to $\overline{P}$	"	"	"
		"	166			"			"	"	"	IN	"	GND	"	$\overline{A}2$ to $\overline{P}$	"	"	"
		"	167			"			"	IN	"	GND	"	"	"	$\overline{A}3$ to $\overline{P}$	"	"	"
		"	168			"			"	GND	"	"	"	"	"	$\overline{B}0$ to $\overline{P}$	"	"	"
		"	169			"			"	"	"	"	IN	4.5 V	"	$\overline{B}1$ to $\overline{P}$	"	"	"
		"	170			"			"	"	IN	4.5 V	GND	GND	"	$\overline{B}2$ to $\overline{P}$	"	"	"
		"	171			"			IN	4.5 V	GND	GND	GND	GND	"	$\overline{B}3$ to $\overline{P}$	"	"	"
	t_{PLH4}	"	172			"			GND	GND	GND	GND	GND	GND	"	$\overline{A}0$ to $\overline{P}$	7	30	ns
		"	173			"			"	"	"	GND	"	IN	"	$\overline{A}1$ to $\overline{P}$	"	"	"
		"	174			"			"	"	"	IN	"	GND	"	$\overline{A}2$ to $\overline{P}$	"	"	"
		"	175			"			"	IN	"	GND	"	"	"	$\overline{A}3$ to $\overline{P}$	"	"	"
		"	176			"			"	GND	"	"	"	"	"	$\overline{B}0$ to $\overline{P}$	"	"	"
		"	177			"			"	"	"	"	IN	4.5 V	"	$\overline{B}1$ to $\overline{P}$	"	"	"
		"	178			"			"	"	IN	4.5 V	GND	GND	"	$\overline{B}2$ to $\overline{P}$	"	"	"
		"	179			"			IN	4.5 V	GND	GND	GND	GND	"	$\overline{B}3$ to $\overline{P}$	"	"	"
	t_{PHL5}	"	180					OUT	4.5 V	GND	4.5 V	GND	4.5 V	GND	"	$\overline{A}0$ to $\overline{G}$	7	25	ns
		"	181					"	"	"	4.5 V	GND	GND	IN	"	$\overline{A}1$ to $\overline{G}$	"	"	"
		"	182					"	"	"	GND	IN	4.5 V	GND	"	$\overline{A}2$ to $\overline{G}$	"	"	"
		"	183					"	GND	IN	4.5 V	GND	"	"	"	$\overline{A}3$ to $\overline{G}$	"	"	"
		"	184					"	4.5 V	GND	"	"	"	"	"	$\overline{B}0$ to $\overline{G}$	"	"	"
		"	185					"	"	"	"	"	IN	"	"	$\overline{B}1$ to $\overline{G}$	"	"	"
		"	186					"	"	"	IN	"	4.5 V	"	"	$\overline{B}2$ to $\overline{G}$	"	"	"
		"	187					"	IN	"	4.5 V	"	4.5 V	"	"	$\overline{B}3$ to $\overline{G}$	"	"	"
	t_{PLH5}	"	188					"	4.5 V	GND	4.5 V	GND	4.5 V	GND	"	$\overline{A}0$ to $\overline{G}$	7	25	ns
		"	189					"	"	"	4.5 V	GND	GND	IN	"	$\overline{A}1$ to $\overline{G}$	"	"	"
		"	190					"	"	"	GND	IN	4.5 V	GND	"	$\overline{A}2$ to $\overline{G}$	"	"	"
		"	191					"	GND	IN	4.5 V	GND	"	"	"	$\overline{A}3$ to $\overline{G}$	"	"	"
		"	192					"	4.5 V	GND	"	"	"	"	"	$\overline{B}0$ to $\overline{G}$	"	"	"
		"	193					"	"	"	"	"	IN	"	"	$\overline{B}1$ to $\overline{G}$	"	"	"
		"	194					"	"	"	IN	"	4.5 V	"	"	$\overline{B}2$ to $\overline{G}$	"	"	"
		"	195					"	IN	"	4.5 V	"	4.5 V	"	"	$\overline{B}3$ to $\overline{G}$	"	"	"

See notes at end of table for device type 01.

TABLE III. Group A inspection for device type 01 - Continued. 1/

Subgroup	Symbol	MIL-STD-883 method	Case J, K, L, Z Test No.	1 $\overline{B}$ 0	2 $\overline{A}$ 0	3 S3	4 S2	5 S1	6 S0	7 Cn	8 M	9 $\overline{F}$ 0	10 $\overline{F}$ 1	11 $\overline{F}$ 2	12 GND	Meas terminal	Test limits Min	Max	Unit
9	t_{PHL6}	3003	196	4.5 V	IN	GND	4.5 V	4.5 V	GND	GND	GND				GND	$\overline{A}$0 to $\overline{G}$	7	30	ns
T_C = 25°C		(Fig 4)	197	GND	GND	"	"	"	"	"	"				"	$\overline{A}$1 to $\overline{G}$	"	"	"
		"	198	"	"	"	"	"	"	"	"				"	$\overline{A}$2 to $\overline{G}$	"	"	"
		"	199	"	"	"	"	"	"	"	"				"	$\overline{A}$3 to $\overline{G}$	"	"	"
		"	200	IN	"	"	"	"	"	"	"				"	$\overline{B}$0 to $\overline{G}$	"	"	"
		"	201	GND	"	"	"	"	"	"	"				"	$\overline{B}$1 to $\overline{G}$	"	"	"
		"	202	"	"	"	"	"	"	"	"				"	$\overline{B}$2 to $\overline{G}$	"	"	"
		"	203	"	"	"	"	"	"	"	"				"	$\overline{B}$3 to $\overline{G}$	"	"	"
	t_{PLH6}	"	204	4.5 V	IN	GND	4.5 V	4.5 V	GND	GND	GND				"	$\overline{A}$0 to $\overline{G}$	7	30	ns
		"	205	GND	GND	"	"	"	"	"	"				"	$\overline{A}$1 to $\overline{G}$	"	"	"
		"	206	"	"	"	"	"	"	"	"				"	$\overline{A}$2 to $\overline{G}$	"	"	"
		"	207	"	"	"	"	"	"	"	"				"	$\overline{A}$3 to $\overline{G}$	"	"	"
		"	208	IN	"	"	"	"	"	"	"				"	$\overline{B}$0 to $\overline{G}$	"	"	"
		"	209	GND	"	"	"	"	"	"	"				"	$\overline{B}$1 to $\overline{G}$	"	"	"
		"	210	"	"	"	"	"	"	"	"				"	$\overline{B}$2 to $\overline{G}$	"	"	"
		"	211	"	"	"	"	"	"	"	"				"	$\overline{B}$3 to $\overline{G}$	"	"	"
	t_{PHL7}	"	212	GND	4.5 V	4.5 V	GND	GND	4.5 V	IN	GND	OUT			"	$\overline{C}$n to $\overline{F}$0	7	24	ns
	t_{PLH7}	"	213	GND	4.5 V	4.5 V	GND	GND	4.5 V	IN	GND	OUT			"	$\overline{C}$n to $\overline{F}$0	7	23	ns
	t_{PHL8}	"	214	GND	IN	GND	4.5 V	4.5 V	GND	GND	GND				"	$\overline{A}$0 to A = B	7	54	ns
		"	215	"	4.5 V	"	"	"	"	"	"				"	$\overline{A}$1 to A = B	"	"	"
		"	216	"	"	"	"	"	"	"	"				"	$\overline{A}$2 to A = B	"	"	"
		"	217	"	"	"	"	"	"	"	"				"	$\overline{A}$3 to A = B	"	"	"
		"	218	IN	"	"	"	"	"	"	"				"	$\overline{B}$0 to A = B	"	"	"
		"	219	GND	"	"	"	"	"	"	"				"	$\overline{B}$1 to A = B	"	"	"
		"	220	"	"	"	"	"	"	"	"				"	$\overline{B}$2 to A = B	"	"	"
		"	221	"	"	"	"	"	"	"	"				"	$\overline{B}$3 to A = B	"	"	"

See notes at end of table for device type 01.

TABLE III. Group A inspection for device type 01 - Continued. 1/

Subgroup	Symbol	MIL-STD-883 method	Case J, K, L, Z Test No.	13 $\overline{F}$ 3	14 A=B	15 $\overline{P}$	16 Cn+4	17 $\overline{G}$	18 $\overline{B}$ 3	19 $\overline{A}$ 3	20 $\overline{B}$ 2	21 $\overline{A}$ 2	22 $\overline{B}$ 1	23 $\overline{A}$ 1	24 V_{CC}	Meas terminal	Test limits Min	Max	Unit
9	t_{PHL6}	3003	196					OUT	GND	GND	GND	GND	GND	GND	5.0 V	$\overline{A}0$ to $\overline{G}$	7	30	ns
T_C = 25°C		(Fig 4)	197					"	"	"	GND	GND	4.5 V	IN	"	$\overline{A}1$ to $\overline{G}$	"	"	"
		"	198					"	"	"	4.5 V	IN	GND	GND	"	$\overline{A}2$ to $\overline{G}$	"	"	"
		"	199					"	4.5 V	IN	GND	GND	"	"	"	$\overline{A}3$ to $\overline{G}$	"	"	"
		"	200					"	GND	GND	"	"	"	"	"	$\overline{B}0$ to $\overline{G}$	"	"	"
		"	201					"	"	"	"	"	IN	"	"	$\overline{B}1$ to $\overline{G}$	"	"	"
		"	202					"	"	"	IN	"	GND	"	"	$\overline{B}2$ to $\overline{G}$	"	"	"
		"	203					"	IN	"	GND	"	GND	"	"	$\overline{B}3$ to $\overline{G}$	"	"	"
	t_{PLH6}	"	204					"	GND	GND	GND	GND	GND	GND	"	$\overline{A}0$ to $\overline{G}$	7	30	ns
		"	205					"	"	"	GND	GND	4.5 V	IN	"	$\overline{A}1$ to $\overline{G}$	"	"	"
		"	206					"	"	"	4.5 V	IN	GND	GND	"	$\overline{A}2$ to $\overline{G}$	"	"	"
		"	207					"	4.5 V	IN	GND	GND	"	"	"	$\overline{A}3$ to $\overline{G}$	"	"	"
		"	208					"	GND	GND	"	"	"	"	"	$\overline{B}0$ to $\overline{G}$	"	"	"
		"	209					"	"	"	"	"	IN	"	"	$\overline{B}1$ to $\overline{G}$	"	"	"
		"	210					"	"	"	IN	"	GND	"	"	$\overline{B}2$ to $\overline{G}$	"	"	"
		"	211					"	IN	"	GND	"	GND	"	"	$\overline{B}3$ to $\overline{G}$	"	"	"
	t_{PHL7}	"	212						GND	4.5 V	GND	4.5 V	GND	4.5 V	"	$\overline{C}n$ to $\overline{F}0$	7	24	ns
	t_{PLH7}	"	213						GND	4.5 V	GND	4.5 V	GND	4.5 V	"	$\overline{C}n$ to $\overline{F}0$	7	23	ns
	t_{PHL8}	"	214		OUT				GND	4.5 V	GND	4.5 V	GND	4.5 V	"	$\overline{A}0$ to A = B	7	54	ns
		"	215		"				"	"	"	4.5 V	"	IN	"	$\overline{A}1$ to A = B	"	"	"
		"	216		"				"	"	"	IN	"	4.5 V	"	$\overline{A}2$ to A = B	"	"	"
		"	217		"				"	IN	"	4.5 V	"	"	"	$\overline{A}3$ to A = B	"	"	"
		"	218		"				"	4.5 V	"	"	"	"	"	$\overline{B}0$ to A = B	"	"	"
		"	219		"				"	"	"	"	IN	"	"	$\overline{B}1$ to A = B	"	"	"
		"	220		"				"	"	IN	"	GND	"	"	$\overline{B}2$ to A = B	"	"	"
		"	221		"				IN	"	GND	"	GND	"	"	$\overline{B}3$ to A = B	"	"	"

See notes at end of table for device type 01.

TABLE III. Group A inspection for device type 01 - Continued. 1/

Subgroup	Symbol	MIL-STD-883 method	Case J, K, L, Z Test No.	1 $\overline{B}$ 0	2 $\overline{A}$ 0	3 S3	4 S2	5 S1	6 S0	7 Cn	8 M	9 $\overline{F}$ 0	10 $\overline{F}$ 1	11 $\overline{F}$ 2	12 GND	Meas terminal	Test limits Min	Test limits Max	Test limits Unit
9	t_{PLH8}	3003	222	GND	IN	GND	4.5 V	4.5 V	GND	GND	GND				GND	$\overline{A}$0 to A = B	7	58	ns
T_C = 25°C		(Fig 4)	223	"	4.5 V	"	"	"	"	"	"				"	$\overline{A}$1 to A = B	"	"	"
		"	224	"	"	"	"	"	"	"	"				"	$\overline{A}$2 to A = B	"	"	"
		"	225	"	"	"	"	"	"	"	"				"	$\overline{A}$3 to A = B	"	"	"
		"	226	IN	"	"	"	"	"	"	"				"	$\overline{B}$0 to A = B	"	"	"
		"	227	GND	"	"	"	"	"	"	"				"	$\overline{B}$1 to A = B	"	"	"
		"	228	"	"	"	"	"	"	"	"				"	$\overline{B}$2 to A = B	"	"	"
		"	229	"	"	"	"	"	"	"	"				"	$\overline{B}$3 to A = B	"	"	"
	t_{PHL9}	"	230	GND	4.5 V	4.5 V	GND	GND	4.5 V	IN	GND				"	Cn to Cn+4	7	23	ns
	t_{PLH9}	"	231	GND	4.5 V	4.5 V	GND	GND	4.5 V	IN	GND				"	Cn to Cn+4	7	22	ns
	t_{PHL10}	"	232	4.5 V	4.5 V	GND	4.5 V	4.5 V	GND	IN	GND				"	Cn to Cn+4	7	23	ns
	t_{PLH10}	"	233	4.5 V	4.5 V	GND	4.5 V	4.5 V	GND	IN	GND				"	Cn to Cn+4	7	22	ns
	t_{PHL11}	"	234	GND	IN	4.5 V	GND	GND	4.5 V	GND	GND				"	$\overline{A}$0 to Cn + 4	7	34	ns
		"	235	4.5 V	GND	"	"	"	"	"	"				"	$\overline{A}$1 to Cn + 4	"	"	"
		"	236	"	"	"	"	"	"	"	"				"	$\overline{A}$2 to Cn + 4	"	"	"
		"	237	"	"	"	"	"	"	"	"				"	$\overline{A}$3 to Cn + 4	"	"	"
		"	238	IN	"	"	"	"	"	"	"				"	$\overline{B}$0 to Cn + 4	"	"	"
		"	239	4.5 V	"	"	"	"	"	"	"				"	$\overline{B}$1 to Cn + 4	"	"	"
		"	240	"	"	"	"	"	"	"	"				"	$\overline{B}$2 to Cn + 4	"	"	"
		"	241	"	"	"	"	"	"	"	"				"	$\overline{B}$3 to Cn + 4	"	"	"
	t_{PLH11}	"	242	GND	IN	4.5 V	GND	GND	4.5 V	GND	GND				"	$\overline{A}$0 to Cn + 4	7	40	ns
		"	243	4.5 V	GND	"	"	"	"	"	"				"	$\overline{A}$1 to Cn + 4	"	"	"
		"	244	"	"	"	"	"	"	"	"				"	$\overline{A}$2 to Cn + 4	"	"	"
		"	245	"	"	"	"	"	"	"	"				"	$\overline{A}$3 to Cn + 4	"	"	"
		"	246	IN	"	"	"	"	"	"	"				"	$\overline{B}$0 to Cn + 4	"	"	"
		"	247	4.5 V	"	"	"	"	"	"	"				"	$\overline{B}$1 to Cn + 4	"	"	"
		"	248	"	"	"	"	"	"	"	"				"	$\overline{B}$2 to Cn + 4	"	"	"
		"	249	"	"	"	"	"	"	"	"				"	$\overline{B}$3 to Cn + 4	"	"	"

See notes at end of table for device type 01.

TABLE III. Group A inspection for device type 01 - Continued. 1/

Subgroup	Symbol	MIL-STD-883 method	Case J, K, L, Z Test No.	13 $\overline{F}$ 3	14 A=B	15 $\overline{P}$	16 Cn+4	17 $\overline{G}$	18 $\overline{B}$ 3	19 $\overline{A}$ 3	20 $\overline{B}$ 2	21 $\overline{A}$ 2	22 $\overline{B}$ 1	23 $\overline{A}$ 1	24 V_{CC}	Meas terminal	Test limits Min	Test limits Max	Test limits Unit
9	t_{PLH8}	3003	222		OUT				GND	4.5 V	GND	4.5 V	GND	4.5 V	5.0 V	$\overline{A}0$ to A = B	7	58	ns
T_C = 25°C		(Fig 4)	223		"				"	"	"	4.5 V	"	IN	"	$\overline{A}1$ to A = B	"	"	"
		"	224		"				"	"	"	IN	"	4.5 V	"	$\overline{A}2$ to A = B	"	"	"
		"	225		"				"	IN	"	4.5 V	"	"	"	$\overline{A}3$ to A = B	"	"	"
		"	226		"				"	4.5 V	"	"	"	"	"	$\overline{B}0$ to A = B	"	"	"
		"	227		"				"	"	"	"	IN	"	"	$\overline{B}1$ to A = B	"	"	"
		"	228		"				"	"	IN	"	GND	"	"	$\overline{B}2$ to A = B	"	"	"
		"	229		"				IN	"	GND	"	GND	"	"	$\overline{B}3$ to A = B	"	"	"
	t_{PHL9}	"	230				OUT		GND	4.5 V	GND	4.5 V	GND	4.5 V	"	Cn to Cn+4	7	23	ns
	t_{PLH9}	"	231				"		GND	4.5 V	GND	4.5 V	GND	4.5 V	"	Cn to Cn+4	7	22	ns
	t_{PHL10}	"	232				"		4.5 V	4.5 V	4.5 V	4.5 V	4.5 V	4.5 V	"	Cn to Cn+4	7	23	ns
	t_{PLH10}	"	233				"		4.5 V	4.5 V	4.5 V	4.5 V	4.5 V	4.5 V	"	Cn to Cn+4	7	22	ns
	t_{PHL11}	"	234				"		4.5 V	GND	4.5 V	GND	4.5 V	GND	"	$\overline{A}0$ to Cn + 4	7	34	ns
		"	235				"		"	"	4.5 V	GND	GND	IN	"	$\overline{A}1$ to Cn + 4	"	"	"
		"	236				"		"	"	GND	IN	4.5 V	GND	"	$\overline{A}2$ to Cn + 4	"	"	"
		"	237				"		GND	IN	4.5 V	GND	"	"	"	$\overline{A}3$ to Cn + 4	"	"	"
		"	238				"		4.5 V	GND	"	"	"	"	"	$\overline{B}0$ to Cn + 4	"	"	"
		"	239				"		"	"	"	"	IN	"	"	$\overline{B}1$ to Cn + 4	"	"	"
		"	240				"		"	"	IN	"	4.5 V	"	"	$\overline{B}2$ to Cn + 4	"	"	"
		"	241				"		IN	"	4.5 V	"	4.5 V	"	"	$\overline{B}3$ to Cn + 4	"	"	"
	t_{PLH11}	"	242				"		4.5 V	GND	4.5 V	GND	4.5 V	GND	"	$\overline{A}0$ to Cn + 4	7	40	ns
		"	243				"		"	"	4.5 V	GND	GND	IN	"	$\overline{A}1$ to Cn + 4	"	"	"
		"	244				"		"	"	GND	IN	4.5 V	GND	"	$\overline{A}2$ to Cn + 4	"	"	"
		"	245				"		GND	IN	4.5 V	GND	"	"	"	$\overline{A}3$ to Cn + 4	"	"	"
		"	246				"		4.5 V	GND	"	"	"	"	"	$\overline{B}0$ to Cn + 4	"	"	"
		"	247				"		"	"	"	"	IN	"	"	$\overline{B}1$ to Cn + 4	"	"	"
		"	248				"		"	"	IN	"	4.5 V	"	"	$\overline{B}2$ to Cn + 4	"	"	"
		"	249				"		IN	"	4.5 V	"	4.5 V	"	"	$\overline{B}3$ to Cn + 4	"	"	"

See notes at end of table for device type 01.

TABLE III. Group A inspection for device type 01 - Continued. 1/

Subgroup	Symbol	MIL-STD-883 method	Case J, K, L, Z Test No.	1 $\overline{B}$ 0	2 $\overline{A}$ 0	3 S3	4 S2	5 S1	6 S0	7 Cn	8 M	9 $\overline{F}$ 0	10 $\overline{F}$ 1	11 $\overline{F}$ 2	12 GND	Meas terminal	Test limits Min	Max	Unit
9	t_{PHL12}	3003	250	4.5 V	IN	GND	4.5 V	4.5 V	GND	GND	GND				GND	$\overline{A}$0 to Cn + 4	7	40	ns
T_C = 25°C		(Fig 4)	251	GND	GND	"	"	"	"	"	"				"	$\overline{A}$1 to Cn + 4	"	"	"
		"	252	"	"	"	"	"	"	"	"				"	$\overline{A}$2 to Cn + 4	"	"	"
		"	253	"	"	"	"	"	"	"	"				"	$\overline{A}$3 to Cn + 4	"	"	"
		"	254	IN	"	"	"	"	"	"	"				"	$\overline{B}$0 to Cn + 4	"	"	"
		"	255	GND	"	"	"	"	"	"	"				"	$\overline{B}$1 to Cn + 4	"	"	"
		"	256	"	"	"	"	"	"	"	"				"	$\overline{B}$2 to Cn + 4	"	"	"
		"	257	"	"	"	"	"	"	"	"				"	$\overline{B}$3 to Cn + 4	"	"	"
	t_{PLH12}	"	258	4.5 V	IN	GND	4.5 V	4.5 V	GND	GND	GND				"	$\overline{A}$0 to Cn + 4	7	40	ns
		"	259	GND	GND	"	"	"	"	"	"				"	$\overline{A}$1 to Cn + 4	"	"	"
		"	260	"	"	"	"	"	"	"	"				"	$\overline{A}$2 to Cn + 4	"	"	"
		"	261	"	"	"	"	"	"	"	"				"	$\overline{A}$3 to Cn + 4	"	"	"
		"	262	IN	"	"	"	"	"	"	"				"	$\overline{B}$0 to Cn + 4	"	"	"
		"	263	GND	"	"	"	"	"	"	"				"	$\overline{B}$1 to Cn + 4	"	"	"
		"	264	"	"	"	"	"	"	"	"				"	$\overline{B}$2 to Cn + 4	"	"	"
		"	265	"	"	"	"	"	"	"	"				"	$\overline{B}$3 to Cn + 4	"	"	"
	t_{PHL13}	"	266	GND	IN	GND	4.5 V	4.5 V	GND	GND	4.5 V	OUT			"	$\overline{A}$ 0 to $\overline{F}$ 0	7	36	ns
		"	267	"	GND	"	"	"	"	"	"		OUT		"	$\overline{A}$ 1 to $\overline{F}$ 1	"	"	"
		"	268	"	"	"	"	"	"	"	"			OUT	"	$\overline{A}$ 2 to $\overline{F}$ 2	"	"	"
		"	269	"	"	"	"	"	"	"	"				"	$\overline{A}$ 3 to $\overline{F}$ 3	"	"	"
		"	270	IN	"	"	"	"	"	"	"	OUT			"	$\overline{B}$ 0 to $\overline{F}$ 0	"	"	"
		"	271	GND	"	"	"	"	"	"	"		OUT		"	$\overline{B}$ 1 to $\overline{F}$ 1	"	"	"
		"	272	"	"	"	"	"	"	"	"			OUT	"	$\overline{B}$ 2 to $\overline{F}$ 2	"	"	"
		"	273	"	"	"	"	"	"	"	"				"	$\overline{B}$ 3 to $\overline{F}$ 3	"	"	"
	t_{PLH13}	"	274	GND	IN	GND	4.5 V	4.5 V	GND	GND	4.5 V	OUT			"	$\overline{A}$ 0 to $\overline{F}$ 0	7	50	ns
		"	275	"	GND	"	"	"	"	"	"		OUT		"	$\overline{A}$ 1 to $\overline{F}$ 1	"	"	"
		"	276	"	"	"	"	"	"	"	"			OUT	"	$\overline{A}$ 2 to $\overline{F}$ 2	"	"	"
		"	277	"	"	"	"	"	"	"	"				"	$\overline{A}$ 3 to $\overline{F}$ 3	"	"	"
		"	278	IN	"	"	"	"	"	"	"	OUT			"	$\overline{B}$ 0 to $\overline{F}$ 0	"	"	"
		"	279	GND	"	"	"	"	"	"	"		OUT		"	$\overline{B}$ 1 to $\overline{F}$ 1	"	"	"
		"	280	"	"	"	"	"	"	"	"			OUT	"	$\overline{B}$ 2 to $\overline{F}$ 2	"	"	"
		"	281	"	"	"	"	"	"	"	"				"	$\overline{B}$ 3 to $\overline{F}$ 3	"	"	"

See notes at end of table for device type 01.

TABLE III. Group A inspection for device type 01 - Continued. 1/

Subgroup	Symbol	MIL-STD-883 method	Case J, K, L, Z Test No.	13 $\overline{F}$ 3	14 A=B	15 $\overline{P}$	16 Cn+4	17 $\overline{G}$	18 $\overline{B}$ 3	19 $\overline{A}$ 3	20 $\overline{B}$ 2	21 $\overline{A}$ 2	22 $\overline{B}$ 1	23 $\overline{A}$ 1	24 V_{CC}	Meas terminal	Test limits Min	Max	Unit
9	t_{PHL12}	3003	250				OUT		GND	GND	GND	GND	GND	GND	5.0 V	$\overline{A}$0 to Cn + 4	7	40	ns
T_C = 25°C		(Fig 4)	251				"		"	"	GND	GND	4.5 V	IN	"	$\overline{A}$1 to Cn + 4	"	"	"
		"	252				"		"	"	4.5 V	IN	GND	GND	"	$\overline{A}$2 to Cn + 4	"	"	"
		"	253				"		4.5 V	IN	GND	GND	"	"	"	$\overline{A}$3 to Cn + 4	"	"	"
		"	254				"		GND	GND	"	"	"	"	"	$\overline{B}$0 to Cn + 4	"	"	"
		"	255				"		"	"	"	"	IN	"	"	$\overline{B}$1 to Cn + 4	"	"	"
		"	256				"		"	"	IN	"	GND	"	"	$\overline{B}$2 to Cn + 4	"	"	"
		"	257				"		IN	"	GND	"	GND	"	"	$\overline{B}$3 to Cn + 4	"	"	"
	t_{PLH12}	"	258				"		GND	GND	GND	GND	GND	GND	"	$\overline{A}$0 to Cn + 4	7	40	ns
		"	259				"		"	"	GND	GND	4.5 V	IN	"	$\overline{A}$1 to Cn + 4	"	"	"
		"	260				"		"	"	4.5 V	IN	GND	GND	"	$\overline{A}$2 to Cn + 4	"	"	"
		"	261				"		4.5 V	IN	GND	GND	"	"	"	$\overline{A}$3 to Cn + 4	"	"	"
		"	262				"		GND	GND	"	"	"	"	"	$\overline{B}$0 to Cn + 4	"	"	"
		"	263				"		"	"	"	"	IN	"	"	$\overline{B}$1 to Cn + 4	"	"	"
		"	264				"		"	"	IN	"	GND	"	"	$\overline{B}$2 to Cn + 4	"	"	"
		"	265				"		IN	"	GND	"	GND	"	"	$\overline{B}$3 to Cn + 4	"	"	"
	t_{PHL13}	"	266				"		GND	GND	GND	GND	GND	GND	"	$\overline{A}$ 0 to $\overline{F}$ 0	7	36	ns
		"	267				"		"	"	"	GND	"	IN	"	$\overline{A}$ 1 to $\overline{F}$ 1	"	"	"
		"	268				"		"	"	"	IN	"	GND	"	$\overline{A}$ 2 to $\overline{F}$ 2	"	"	"
		"	269	OUT			"		"	IN	"	GND	"	"	"	$\overline{A}$ 3 to $\overline{F}$ 3	"	"	"
		"	270				"		"	GND	"	"	"	"	"	$\overline{B}$ 0 to $\overline{F}$ 0	"	"	"
		"	271				"		"	"	"	"	IN	"	"	$\overline{B}$ 1 to $\overline{F}$ 1	"	"	"
		"	272				"		"	"	IN	"	GND	"	"	$\overline{B}$ 2 to $\overline{F}$ 2	"	"	"
		"	273	OUT			"		IN	"	GND	"	GND	"	"	$\overline{B}$ 3 to $\overline{F}$ 3	"	"	"
	t_{PLH13}	"	274				"		GND	GND	GND	GND	GND	GND	"	$\overline{A}$ 0 to $\overline{F}$ 0	7	50	ns
		"	275				"		"	"	"	GND	"	IN	"	$\overline{A}$ 1 to $\overline{F}$ 1	"	"	"
		"	276				"		"	"	"	IN	"	GND	"	$\overline{A}$ 2 to $\overline{F}$ 2	"	"	"
		"	277	OUT			"		"	IN	"	GND	"	"	"	$\overline{A}$ 3 to $\overline{F}$ 3	"	"	"
		"	278				"		"	GND	"	"	"	"	"	$\overline{B}$ 0 to $\overline{F}$ 0	"	"	"
		"	279				"		"	"	"	"	IN	"	"	$\overline{B}$ 1 to $\overline{F}$ 1	"	"	"
		"	280				"		"	"	IN	"	GND	"	"	$\overline{B}$ 2 to $\overline{F}$ 2	"	"	"
		"	281	OUT			"		IN	"	GND	"	GND	"	"	$\overline{B}$ 3 to $\overline{F}$ 3	"	"	"

See notes at end of table for device type 01.

TABLE III. Group A inspection for device type 01 - Continued. 1/

Subgroup	Symbol	MIL-STD-883 method	Case J, K, L, Z Test No.	1 $\overline{B}$ 0	2 $\overline{A}$ 0	3 S3	4 S2	5 S1	6 S0	7 Cn	8 M	9 $\overline{F}$ 0	10 $\overline{F}$ 1	11 $\overline{F}$ 2	12 GND	Meas terminal	Test limits Min	Test limits Max	Test limits Unit
10	t_{PHL1}	3003	282	4.5 V	IN	4.5 V	GND	GND	4.5 V	GND	GND	OUT			GND	$\overline{A}$0 to $\overline{F}$0	7	46	ns
T_C = 125°C		(Fig 4)	283	"	4.5 V	"	"	"	"	"	"		OUT		"	$\overline{A}$1 to $\overline{F}$1	"	"	"
		"	284	"	"	"	"	"	"	"	"			OUT	"	$\overline{A}$2 to $\overline{F}$2	"	"	"
		"	285	"	"	"	"	"	"	"	"				"	$\overline{A}$3 to $\overline{F}$3	"	"	"
		"	286	IN	"	"	"	"	"	"	"	OUT			"	$\overline{B}$0 to $\overline{F}$0	"	"	"
		"	287	4.5 V	"	"	"	"	"	"	"		OUT		"	$\overline{B}$1 to $\overline{F}$1	"	"	"
		"	288	"	"	"	"	"	"	"	"			OUT	"	$\overline{B}$2 to $\overline{F}$2	"	"	"
		"	289	"	"	"	"	"	"	"	"				"	$\overline{B}$3 to $\overline{F}$3	"	"	"
	t_{PLH1}	"	290	4.5 V	IN	4.5 V	GND	GND	4.5 V	GND	GND	OUT			"	$\overline{A}$0 to $\overline{F}$0	7	60	ns
		"	291	"	4.5 V	"	"	"	"	"	"		OUT		"	$\overline{A}$1 to $\overline{F}$1	"	"	"
		"	292	"	"	"	"	"	"	"	"			OUT	"	$\overline{A}$2 to $\overline{F}$2	"	"	"
		"	293	"	"	"	"	"	"	"	"				"	$\overline{A}$3 to $\overline{F}$3	"	"	"
		"	294	IN	"	"	"	"	"	"	"	OUT			"	$\overline{B}$0 to $\overline{F}$0	"	"	"
		"	295	4.5 V	"	"	"	"	"	"	"		OUT		"	$\overline{B}$1 to $\overline{F}$1	"	"	"
		"	296	"	"	"	"	"	"	"	"			OUT	"	$\overline{B}$2 to $\overline{F}$2	"	"	"
		"	297	"	"	"	"	"	"	"	"				"	$\overline{B}$3 to $\overline{F}$3	"	"	"

See notes at end of table for device type 01.

TABLE III. Group A inspection for device type 01 - Continued. 1/

Subgroup	Symbol	MIL-STD-883 method	Case J, K, L, Z Test No.	13 $\overline{F}$ 3	14 A=B	15 $\overline{P}$	16 Cn+4	17 $\overline{G}$	18 $\overline{B}$ 3	19 $\overline{A}$ 3	20 $\overline{B}$ 2	21 $\overline{A}$ 2	22 $\overline{B}$ 1	23 $\overline{A}$ 1	24 V_{CC}	Meas terminal	Test limits Min	Max	Unit
10	t_{PHL1}	3003	282						4.5 V	4.5 V	4.5 V	4.5 V	4.5 V	4.5 V	5.0 V	$\overline{A}0$ to $\overline{F}0$	7	46	ns
T_C = 125°C		(Fig 4)	283						"	"	"	4.5 V	"	IN	"	$\overline{A}1$ to $\overline{F}1$	"	"	"
		"	284						"	"	"	IN	"	4.5 V	"	$\overline{A}2$ to $\overline{F}2$	"	"	"
		"	285	OUT					"	IN	"	4.5 V	"	"	"	$\overline{A}3$ to $\overline{F}3$	"	"	"
		"	286						"	4.5 V	"	"	"	"	"	$\overline{B}0$ to $\overline{F}0$	"	"	"
		"	287						"	"	"	"	IN	"	"	$\overline{B}1$ to $\overline{F}1$	"	"	"
		"	288						"	"	IN	"	4.5 V	"	"	$\overline{B}2$ to $\overline{F}2$	"	"	"
		"	289	OUT					IN	"	4.5 V	"	4.5 V	"	"	$\overline{B}3$ to $\overline{F}3$	"	"	"
	t_{PLH1}	"	290						4.5 V	4.5 V	4.5 V	4.5 V	4.5 V	4.5 V	"	$\overline{A}0$ to $\overline{F}0$	7	60	ns
		"	291						"	"	"	4.5 V	"	IN	"	$\overline{A}1$ to $\overline{F}1$	"	"	"
		"	292						"	"	"	IN	"	4.5 V	"	$\overline{A}2$ to $\overline{F}2$	"	"	"
		"	293	OUT					"	IN	"	4.5 V	"	"	"	$\overline{A}3$ to $\overline{F}3$	"	"	"
		"	294						"	4.5 V	"	"	"	"	"	$\overline{B}0$ to $\overline{F}0$	"	"	"
		"	295						"	"	"	"	IN	"	"	$\overline{B}1$ to $\overline{F}1$	"	"	"
		"	296						"	"	IN	"	4.5 V	"	"	$\overline{B}2$ to $\overline{F}2$	"	"	"
		"	297	OUT					IN	"	4.5 V	"	4.5 V	"	"	$\overline{B}3$ to $\overline{F}3$	"	"	"

See notes at end of table for device type 01.

TABLE III. Group A inspection for device type 01 - Continued. 1/

Subgroup	Symbol	MIL-STD-883 method	Case J, K, L, Z Test No.	1 $\overline{B}$ 0	2 $\overline{A}$ 0	3 S3	4 S2	5 S1	6 S0	7 Cn	8 M	9 $\overline{F}$ 0	10 $\overline{F}$ 1	11 $\overline{F}$ 2	12 GND	Meas terminal	Test limits Min	Max	Unit
10	t_{PHL2}	3003	298	GND	IN	GND	4.5 V	4.5 V	GND	GND	GND	OUT			GND	$\overline{A}$0 to $\overline{F}$0	7	49	ns
T_C = 125°C		(Fig 4)	299	"	4.5 V	"	"	"	"	"	"		OUT		"	$\overline{A}$1 to $\overline{F}$1	"	"	"
		"	300	"	"	"	"	"	"	"	"			OUT	"	$\overline{A}$2 to $\overline{F}$2	"	"	"
		"	301	"	"	"	"	"	"	"	"				"	$\overline{A}$3 to $\overline{F}$3	"	"	"
		"	302	IN	"	"	"	"	"	"	"	OUT			"	$\overline{B}$0 to $\overline{F}$0	"	"	"
		"	303	GND	"	"	"	"	"	"	"		OUT		"	$\overline{B}$1 to $\overline{F}$1	"	"	"
		"	304	"	"	"	"	"	"	"	"			OUT	"	$\overline{B}$2 to $\overline{F}$2	"	"	"
		"	305	"	"	"	"	"	"	"	"				"	$\overline{B}$3 to $\overline{F}$3	"	"	"
	t_{PLH2}	"	306	GND	IN	GND	4.5 V	4.5 V	GND	GND	GND	OUT			"	$\overline{A}$0 to $\overline{F}$0	7	69	ns
		"	307	"	4.5 V	"	"	"	"	"	"		OUT		"	$\overline{A}$1 to $\overline{F}$1	"	"	"
		"	308	"	"	"	"	"	"	"	"			OUT	"	$\overline{A}$2 to $\overline{F}$2	"	"	"
		"	309	"	"	"	"	"	"	"	"				"	$\overline{A}$3 to $\overline{F}$3	"	"	"
		"	310	IN	"	"	"	"	"	"	"	OUT			"	$\overline{B}$0 to $\overline{F}$0	"	"	"
		"	311	GND	"	"	"	"	"	"	"		OUT		"	$\overline{B}$1 to $\overline{F}$1	"	"	"
		"	312	"	"	"	"	"	"	"	"			OUT	"	$\overline{B}$2 to $\overline{F}$2	"	"	"
		"	313	"	"	"	"	"	"	"	"				"	$\overline{B}$3 to $\overline{F}$3	"	"	"
	t_{PHL3}	"	314	4.5 V	IN	4.5 V	GND	GND	4.5 V	GND	GND				"	$\overline{A}$0 to $\overline{P}$	7	40	ns
		"	315	GND	GND	"	"	"	"	"	"				"	$\overline{A}$1 to $\overline{P}$	"	"	"
		"	316	"	"	"	"	"	"	"	"				"	$\overline{A}$2 to $\overline{P}$	"	"	"
		"	317	"	"	"	"	"	"	"	"				"	$\overline{A}$3 to $\overline{P}$	"	"	"
		"	318	IN	4.5 V	"	"	"	"	"	"				"	$\overline{B}$0 to $\overline{P}$	"	"	"
		"	319	GND	GND	"	"	"	"	"	"				"	$\overline{B}$1 to $\overline{P}$	"	"	"
		"	320	"	"	"	"	"	"	"	"				"	$\overline{B}$2 to $\overline{P}$	"	"	"
		"	321	"	"	"	"	"	"	"	"				"	$\overline{B}$3 to $\overline{P}$	"	"	"
	t_{PLH3}	"	322	4.5 V	IN	4.5 V	GND	GND	4.5 V	GND	GND				"	$\overline{A}$0 to $\overline{P}$	7	27	ns
		"	323	GND	GND	"	"	"	"	"	"				"	$\overline{A}$1 to $\overline{P}$	"	"	"
		"	324	"	"	"	"	"	"	"	"				"	$\overline{A}$2 to $\overline{P}$	"	"	"
		"	325	"	"	"	"	"	"	"	"				"	$\overline{A}$3 to $\overline{P}$	"	"	"
		"	326	IN	4.5 V	"	"	"	"	"	"				"	$\overline{B}$0 to $\overline{P}$	"	"	"
		"	327	GND	GND	"	"	"	"	"	"				"	$\overline{B}$1 to $\overline{P}$	"	"	"
		"	328	"	"	"	"	"	"	"	"				"	$\overline{B}$2 to $\overline{P}$	"	"	"
		"	329	"	"	"	"	"	"	"	"				"	$\overline{B}$3 to $\overline{P}$	"	"	"

See notes at end of table for device type 01.

TABLE III. Group A inspection for device type 01 - Continued. 1/

Subgroup	Symbol	MIL-STD-883 method	Case J, K, L, Z Test No.	13 $\overline{F}$ 3	14 A=B	15 $\overline{P}$	16 Cn+4	17 $\overline{G}$	18 $\overline{B}$ 3	19 $\overline{A}$ 3	20 $\overline{B}$ 2	21 $\overline{A}$ 2	22 $\overline{B}$ 1	23 $\overline{A}$ 1	24 V_{CC}	Meas terminal	Test limits Min	Max	Unit
10	t_{PHL2}	3003	298						GND	4.5 V	GND	4.5 V	GND	4.5 V	5.0 V	$\overline{A}0$ to $\overline{F}0$	7	49	ns
T_C = 125°C		(Fig 4)	299						"	"	"	4.5 V	"	IN	"	$\overline{A}1$ to $\overline{F}1$	"	"	"
		"	300						"	"	"	IN	"	4.5 V	"	$\overline{A}2$ to $\overline{F}2$	"	"	"
		"	301	OUT					"	IN	"	4.5 V	"	"	"	$\overline{A}3$ to $\overline{F}3$	"	"	"
		"	302						"	4.5 V	"	"	"	"	"	$\overline{B}0$ to $\overline{F}0$	"	"	"
		"	303						"	"	"	"	IN	"	"	$\overline{B}1$ to $\overline{F}1$	"	"	"
		"	304						"	"	IN	"	GND	"	"	$\overline{B}2$ to $\overline{F}2$	"	"	"
		"	305	OUT					IN	"	GND	"	GND	"	"	$\overline{B}3$ to $\overline{F}3$	"	"	"
	t_{PLH2}	"	306						GND	4.5 V	GND	4.5 V	GND	4.5 V	"	$\overline{A}0$ to $\overline{F}0$	7	69	ns
		"	307						"	"	"	4.5 V	"	IN	"	$\overline{A}1$ to $\overline{F}1$	"	"	"
		"	308						"	"	"	IN	"	4.5 V	"	$\overline{A}2$ to $\overline{F}2$	"	"	"
		"	309	OUT					"	IN	"	4.5 V	"	"	"	$\overline{A}3$ to $\overline{F}3$	"	"	"
		"	310						"	4.5 V	"	"	"	"	"	$\overline{B}0$ to $\overline{F}0$	"	"	"
		"	311						"	"	"	"	IN	"	"	$\overline{B}1$ to $\overline{F}1$	"	"	"
		"	312						"	"	IN	"	GND	"	"	$\overline{B}2$ to $\overline{F}2$	"	"	"
		"	313	OUT					IN	"	GND	"	GND	"	"	$\overline{B}3$ to $\overline{F}3$	"	"	"
	t_{PHL3}	"	314			OUT			GND	GND	GND	GND	GND	GND	"	$\overline{A}0$ to $\overline{P}$	7	40	ns
		"	315			"			"	"	GND	GND	4.5 V	IN	"	$\overline{A}1$ to $\overline{P}$	"	"	"
		"	316			"			"	"	4.5 V	IN	GND	GND	"	$\overline{A}2$ to $\overline{P}$	"	"	"
		"	317			"			4.5 V	IN	GND	GND	GND	GND	"	$\overline{A}3$ to $\overline{P}$	"	"	"
		"	318			"			GND	GND	GND	GND	GND	GND	"	$\overline{B}0$ to $\overline{P}$	"	"	"
		"	319			"			"	"	GND	GND	IN	4.5 V	"	$\overline{B}1$ to $\overline{P}$	"	"	"
		"	320			"			"	"	IN	4.5 V	GND	GND	"	$\overline{B}2$ to $\overline{P}$	"	"	"
		"	321			"			IN	4.5 V	GND	GND	GND	GND	"	$\overline{B}3$ to $\overline{P}$	"	"	"
	t_{PLH3}	"	322			OUT			GND	GND	GND	GND	GND	GND	"	$\overline{A}0$ to $\overline{P}$	7	27	ns
		"	323			"			"	"	GND	GND	4.5 V	IN	"	$\overline{A}1$ to $\overline{P}$	"	"	"
		"	324			"			"	"	4.5 V	IN	GND	GND	"	$\overline{A}2$ to $\overline{P}$	"	"	"
		"	325			"			4.5 V	IN	GND	GND	GND	GND	"	$\overline{A}3$ to $\overline{P}$	"	"	"
		"	326			"			GND	GND	GND	GND	GND	GND	"	$\overline{B}0$ to $\overline{P}$	"	"	"
		"	327			"			"	"	GND	GND	IN	4.5 V	"	$\overline{B}1$ to $\overline{P}$	"	"	"
		"	328			"			"	"	IN	4.5 V	GND	GND	"	$\overline{B}2$ to $\overline{P}$	"	"	"
		"	329			"			IN	4.5 V	GND	GND	GND	GND	"	$\overline{B}3$ to $\overline{P}$	"	"	"

See notes at end of table for device type 01.

TABLE III. Group A inspection for device type 01 - Continued. 1/

Subgroup	Symbol	MIL-STD-883 method	Case J, K, L, Z Test No.	1 $\overline{B}$ 0	2 $\overline{A}$ 0	3 S3	4 S2	5 S1	6 S0	7 Cn	8 M	9 $\overline{F}$ 0	10 $\overline{F}$ 1	11 $\overline{F}$ 2	12 GND	Meas terminal	Test limits Min	Max	Unit
10	t_{PHL4}	3003	330	GND	IN	GND	4.5 V	4.5 V	GND	GND	GND				GND	$\overline{A}$0 to $\overline{P}$	7	40	ns
T_C = 125°C		(Fig 4)	331	"	GND	"	"	"	"	"	"				"	$\overline{A}$1 to $\overline{P}$	"	"	"
		"	332	"	"	"	"	"	"	"	"				"	$\overline{A}$2 to $\overline{P}$	"	"	"
		"	333	"	"	"	"	"	"	"	"				"	$\overline{A}$3 to $\overline{P}$	"	"	"
		"	334	IN	4.5 V	"	"	"	"	"	"				"	$\overline{B}$0 to $\overline{P}$	"	"	"
		"	335	GND	GND	"	"	"	"	"	"				"	$\overline{B}$1 to $\overline{P}$	"	"	"
		"	336	"	"	"	"	"	"	"	"				"	$\overline{B}$2 to $\overline{P}$	"	"	"
		"	337	"	"	"	"	"	"	"	"				"	$\overline{B}$3 to $\overline{P}$	"	"	"
	t_{PLH4}	"	338	GND	IN	GND	4.5 V	4.5 V	GND	GND	GND				"	$\overline{A}$0 to $\overline{P}$	7	36	ns
		"	339	"	GND	"	"	"	"	"	"				"	$\overline{A}$1 to $\overline{P}$	"	"	"
		"	340	"	"	"	"	"	"	"	"				"	$\overline{A}$2 to $\overline{P}$	"	"	"
		"	341	"	"	"	"	"	"	"	"				"	$\overline{A}$3 to $\overline{P}$	"	"	"
		"	342	IN	4.5 V	"	"	"	"	"	"				"	$\overline{B}$0 to $\overline{P}$	"	"	"
		"	343	GND	GND	"	"	"	"	"	"				"	$\overline{B}$1 to $\overline{P}$	"	"	"
		"	344	"	"	"	"	"	"	"	"				"	$\overline{B}$2 to $\overline{P}$	"	"	"
		"	345	"	"	"	"	"	"	"	"				"	$\overline{B}$3 to $\overline{P}$	"	"	"
	t_{PHL5}	"	346	GND	IN	4.5 V	GND	GND	4.5 V	GND	GND				"	$\overline{A}$0 to $\overline{G}$	7	30	ns
		"	347	4.5 V	GND	"	"	"	"	"	"				"	$\overline{A}$1 to $\overline{G}$	"	"	"
		"	348	"	"	"	"	"	"	"	"				"	$\overline{A}$2 to $\overline{G}$	"	"	"
		"	349	"	"	"	"	"	"	"	"				"	$\overline{A}$3 to $\overline{G}$	"	"	"
		"	350	IN	"	"	"	"	"	"	"				"	$\overline{B}$0 to $\overline{G}$	"	"	"
		"	351	4.5 V	"	"	"	"	"	"	"				"	$\overline{B}$1 to $\overline{G}$	"	"	"
		"	352	"	"	"	"	"	"	"	"				"	$\overline{B}$2 to $\overline{G}$	"	"	"
		"	353	"	"	"	"	"	"	"	"				"	$\overline{B}$3 to $\overline{G}$	"	"	"
	t_{PLH5}	"	354	GND	IN	4.5 V	GND	GND	4.5 V	GND	GND				"	$\overline{A}$0 to $\overline{G}$	7	30	ns
		"	355	4.5 V	GND	"	"	"	"	"	"				"	$\overline{A}$1 to $\overline{G}$	"	"	"
		"	356	"	"	"	"	"	"	"	"				"	$\overline{A}$2 to $\overline{G}$	"	"	"
		"	357	"	"	"	"	"	"	"	"				"	$\overline{A}$3 to $\overline{G}$	"	"	"
		"	358	IN	"	"	"	"	"	"	"				"	$\overline{B}$0 to $\overline{G}$	"	"	"
		"	359	4.5 V	"	"	"	"	"	"	"				"	$\overline{B}$1 to $\overline{G}$	"	"	"
		"	360	"	"	"	"	"	"	"	"				"	$\overline{B}$2 to $\overline{G}$	"	"	"
		"	361	"	"	"	"	"	"	"	"				"	$\overline{B}$3 to $\overline{G}$	"	"	"

See notes at end of table for device type 01.

TABLE III. Group A inspection for device type 01 - Continued. 1/

Subgroup	Symbol	MIL-STD-883 method	Case J, K, L, Z Test No.	13 $\overline{F}$ 3	14 A=B	15 $\overline{P}$	16 Cn+4	17 $\overline{G}$	18 $\overline{B}$ 3	19 $\overline{A}$ 3	20 $\overline{B}$ 2	21 $\overline{A}$ 2	22 $\overline{B}$ 1	23 $\overline{A}$ 1	24 V_{CC}	Meas terminal	Test limits Min	Test limits Max	Test limits Unit
10	t_{PHL4}	3003	330			OUT			GND	GND	GND	GND	GND	GND	5.0 V	$\overline{A}0$ to $\overline{P}$	7	40	ns
T_C = 125°C		(Fig 4)	331			"			"	"	"	GND	"	IN	"	$\overline{A}1$ to $\overline{P}$	"	"	"
		"	332			"			"	"	"	IN	"	GND	"	$\overline{A}2$ to $\overline{P}$	"	"	"
		"	333			"			"	IN	"	GND	"	"	"	$\overline{A}3$ to $\overline{P}$	"	"	"
		"	334			"			"	GND	"	"	"	"	"	$\overline{B}0$ to $\overline{P}$	"	"	"
		"	335			"			"	"	"	"	IN	4.5 V	"	$\overline{B}1$ to $\overline{P}$	"	"	"
		"	336			"			"	"	IN	4.5 V	GND	GND	"	$\overline{B}2$ to $\overline{P}$	"	"	"
		"	337			"			IN	4.5 V	GND	GND	GND	GND	"	$\overline{B}3$ to $\overline{P}$	"	"	"
	t_{PLH4}	"	338			"			GND	GND	GND	GND	GND	GND	"	$\overline{A}0$ to $\overline{P}$	7	36	ns
		"	339			"			"	"	"	GND	"	IN	"	$\overline{A}1$ to $\overline{P}$	"	"	"
		"	340			"			"	"	"	IN	"	GND	"	$\overline{A}2$ to $\overline{P}$	"	"	"
		"	341			"			"	IN	"	GND	"	"	"	$\overline{A}3$ to $\overline{P}$	"	"	"
		"	342			"			"	GND	"	"	"	"	"	$\overline{B}0$ to $\overline{P}$	"	"	"
		"	343			"			"	"	"	"	IN	4.5 V	"	$\overline{B}1$ to $\overline{P}$	"	"	"
		"	344			"			"	"	IN	4.5 V	GND	GND	"	$\overline{B}2$ to $\overline{P}$	"	"	"
		"	345			"			IN	4.5 V	GND	GND	GND	GND	"	$\overline{B}3$ to $\overline{P}$	"	"	"
	t_{PHL5}	"	346					OUT	4.5 V	GND	4.5 V	GND	4.5 V	GND	"	$\overline{A}0$ to $\overline{G}$	7	30	ns
		"	347					"	"	"	4.5 V	GND	GND	IN	"	$\overline{A}1$ to $\overline{G}$	"	"	"
		"	348					"	"	"	GND	IN	4.5 V	GND	"	$\overline{A}2$ to $\overline{G}$	"	"	"
		"	349					"	GND	IN	4.5 V	GND	"	"	"	$\overline{A}3$ to $\overline{G}$	"	"	"
		"	350					"	4.5 V	GND	"	"	"	"	"	$\overline{B}0$ to $\overline{G}$	"	"	"
		"	351					"	"	"	"	"	IN	"	"	$\overline{B}1$ to $\overline{G}$	"	"	"
		"	352					"	"	"	IN	"	4.5 V	"	"	$\overline{B}2$ to $\overline{G}$	"	"	"
		"	353					"	IN	"	4.5 V	"	4.5 V	"	"	$\overline{B}3$ to $\overline{G}$	"	"	"
	t_{PLH5}	"	354					"	4.5 V	GND	4.5 V	GND	4.5 V	GND	"	$\overline{A}0$ to $\overline{G}$	7	30	ns
		"	355					"	"	"	4.5 V	GND	GND	IN	"	$\overline{A}1$ to $\overline{G}$	"	"	"
		"	356					"	"	"	GND	IN	4.5 V	GND	"	$\overline{A}2$ to $\overline{G}$	"	"	"
		"	357					"	GND	IN	4.5 V	GND	"	"	"	$\overline{A}3$ to $\overline{G}$	"	"	"
		"	358					"	4.5 V	GND	"	"	"	"	"	$\overline{B}0$ to $\overline{G}$	"	"	"
		"	359					"	"	"	"	"	IN	"	"	$\overline{B}1$ to $\overline{G}$	"	"	"
		"	360					"	"	"	IN	"	4.5 V	"	"	$\overline{B}2$ to $\overline{G}$	"	"	"
		"	361					"	IN	"	4.5 V	"	4.5 V	"	"	$\overline{B}3$ to $\overline{G}$	"	"	"

See notes at end of table for device type 01.

TABLE III. Group A inspection for device type 01 - Continued. 1/

Subgroup	Symbol	MIL-STD-883 method	Case J, K, L, Z Test No.	1 $\overline{B}$ 0	2 $\overline{A}$ 0	3 S3	4 S2	5 S1	6 S0	7 Cn	8 M	9 $\overline{F}$ 0	10 $\overline{F}$ 1	11 $\overline{F}$ 2	12 GND	Meas terminal	Test limits Min	Max	Unit
10	t_{PHL6}	3003	362	4.5 V	IN	GND	4.5 V	4.5 V	GND	GND	GND				GND	$\overline{A}$0 to $\overline{G}$	7	40	ns
T_C = 125°C		(Fig 4)	363	GND	GND	"	"	"	"	"	"				"	$\overline{A}$1 to $\overline{G}$	"	"	"
		"	364	"	"	"	"	"	"	"	"				"	$\overline{A}$2 to $\overline{G}$	"	"	"
		"	365	"	"	"	"	"	"	"	"				"	$\overline{A}$3 to $\overline{G}$	"	"	"
		"	366	IN	"	"	"	"	"	"	"				"	$\overline{B}$0 to $\overline{G}$	"	"	"
		"	367	GND	"	"	"	"	"	"	"				"	$\overline{B}$1 to $\overline{G}$	"	"	"
		"	368	"	"	"	"	"	"	"	"				"	$\overline{B}$2 to $\overline{G}$	"	"	"
		"	369	"	"	"	"	"	"	"	"				"	$\overline{B}$3 to $\overline{G}$	"	"	"
	t_{PLH6}	"	370	4.5 V	IN	GND	4.5 V	4.5 V	GND	GND	GND				"	$\overline{A}$0 to $\overline{G}$	7	40	ns
		"	371	GND	GND	"	"	"	"	"	"				"	$\overline{A}$1 to $\overline{G}$	"	"	"
		"	372	"	"	"	"	"	"	"	"				"	$\overline{A}$2 to $\overline{G}$	"	"	"
		"	373	"	"	"	"	"	"	"	"				"	$\overline{A}$3 to $\overline{G}$	"	"	"
		"	374	IN	"	"	"	"	"	"	"				"	$\overline{B}$0 to $\overline{G}$	"	"	"
		"	375	GND	"	"	"	"	"	"	"				"	$\overline{B}$1 to $\overline{G}$	"	"	"
		"	376	"	"	"	"	"	"	"	"				"	$\overline{B}$2 to $\overline{G}$	"	"	"
		"	377	"	"	"	"	"	"	"	"				"	$\overline{B}$3 to $\overline{G}$	"	"	"
	t_{PHL7}	"	378	GND	4.5 V	4.5 V	GND	GND	4.5 V	IN	GND	OUT			"	$\overline{C}$n to $\overline{F}$0	7	25	ns
	t_{PLH7}	"	379	GND	4.5 V	4.5 V	GND	GND	4.5 V	IN	GND	OUT			"	$\overline{C}$n to $\overline{F}$0	7	27	ns
	t_{PHL8}	"	380	GND	IN	GND	4.5 V	4.5 V	GND	GND	GND				"	$\overline{A}$0 to A = B	7	76	ns
		"	381	"	4.5 V	"	"	"	"	"	"				"	$\overline{A}$1 to A = B	"	"	"
		"	382	"	"	"	"	"	"	"	"				"	$\overline{A}$2 to A = B	"	"	"
		"	383	"	"	"	"	"	"	"	"				"	$\overline{A}$3 to A = B	"	"	"
		"	384	IN	"	"	"	"	"	"	"				"	$\overline{B}$0 to A = B	"	"	"
		"	385	GND	"	"	"	"	"	"	"				"	$\overline{B}$1 to A = B	"	"	"
		"	386	"	"	"	"	"	"	"	"				"	$\overline{B}$2 to A = B	"	"	"
		"	387	"	"	"	"	"	"	"	"				"	$\overline{B}$3 to A = B	"	"	"

See notes at end of table for device type 01.

TABLE III. Group A inspection for device type 01 - Continued. 1/

Subgroup	Symbol	MIL-STD-883 method	Case J, K, L, Z Test No.	13 $\overline{F}$ 3	14 A=B	15 $\overline{P}$	16 Cn+4	17 $\overline{G}$	18 $\overline{B}$ 3	19 $\overline{A}$ 3	20 $\overline{B}$ 2	21 $\overline{A}$ 2	22 $\overline{B}$ 1	23 $\overline{A}$ 1	24 V_{CC}	Meas terminal	Test limits Min	Max	Unit
10	t_{PHL6}	3003	362					OUT	GND	GND	GND	GND	GND	GND	5.0 V	$\overline{A}0$ to $\overline{G}$	7	40	ns
T_C = 125°C		(Fig 4)	363					"	"	"	GND	GND	4.5 V	IN	"	$\overline{A}1$ to $\overline{G}$	"	"	"
		"	364					"	"	"	4.5 V	IN	GND	GND	"	$\overline{A}2$ to $\overline{G}$	"	"	"
		"	365					"	4.5 V	IN	GND	GND	"	"	"	$\overline{A}3$ to $\overline{G}$	"	"	"
		"	366					"	GND	GND	"	"	"	"	"	$\overline{B}0$ to $\overline{G}$	"	"	"
		"	367					"	"	"	"	"	IN	"	"	$\overline{B}1$ to $\overline{G}$	"	"	"
		"	368					"	"	"	IN	"	GND	"	"	$\overline{B}2$ to $\overline{G}$	"	"	"
		"	369					"	IN	"	GND	"	GND	"	"	$\overline{B}3$ to $\overline{G}$	"	"	"
	t_{PLH6}	"	370					"	GND	GND	GND	GND	GND	GND	"	$\overline{A}0$ to $\overline{G}$	7	40	ns
		"	371					"	"	"	GND	GND	4.5 V	IN	"	$\overline{A}1$ to $\overline{G}$	"	"	"
		"	372					"	"	"	4.5 V	IN	GND	GND	"	$\overline{A}2$ to $\overline{G}$	"	"	"
		"	373					"	4.5 V	IN	GND	GND	"	"	"	$\overline{A}3$ to $\overline{G}$	"	"	"
		"	374					"	GND	GND	"	"	"	"	"	$\overline{B}0$ to $\overline{G}$	"	"	"
		"	375					"	"	"	"	"	IN	"	"	$\overline{B}1$ to $\overline{G}$	"	"	"
		"	376					"	"	"	IN	"	GND	"	"	$\overline{B}2$ to $\overline{G}$	"	"	"
		"	377					"	IN	"	GND	"	GND	"	"	$\overline{B}3$ to $\overline{G}$	"	"	"
	t_{PHL7}	"	378						GND	4.5 V	GND	4.5 V	GND	4.5 V	"	$\overline{C}n$ to $\overline{F}0$	7	25	ns
	t_{PLH7}	"	379						GND	4.5 V	GND	4.5 V	GND	4.5 V	"	$\overline{C}n$ to $\overline{F}0$	7	27	ns
	t_{PHL8}	"	380		OUT				GND	4.5 V	GND	4.5 V	GND	4.5 V	"	$\overline{A}0$ to A = B	7	76	ns
		"	381		"				"	"	"	4.5 V	"	IN	"	$\overline{A}1$ to A = B	"	"	"
		"	382		"				"	"	"	IN	"	4.5 V	"	$\overline{A}2$ to A = B	"	"	"
		"	383		"				"	IN	"	4.5 V	"	"	"	$\overline{A}3$ to A = B	"	"	"
		"	384		"				"	4.5 V	"	"	"	"	"	$\overline{B}0$ to A = B	"	"	"
		"	385		"				"	"	"	"	IN	"	"	$\overline{B}1$ to A = B	"	"	"
		"	386		"				"	"	IN	"	GND	"	"	$\overline{B}2$ to A = B	"	"	"
		"	387		"				IN	"	GND	"	GND	"	"	$\overline{B}3$ to A = B	"	"	"

See notes at end of table for device type 01.

TABLE III. Group A inspection for device type 01 - Continued. 1/

Subgroup	Symbol	MIL-STD-883 method	Case J, K, L, Z Test No.	1 $\overline{B}$ 0	2 $\overline{A}$ 0	3 S3	4 S2	5 S1	6 S0	7 Cn	8 M	9 $\overline{F}$ 0	10 $\overline{F}$ 1	11 $\overline{F}$ 2	12 GND	Meas terminal	Test limits Min	Test limits Max	Test limits Unit
10	t_{PLH8}	3003	388	GND	IN	GND	4.5 V	4.5 V	GND	GND	GND				GND	$\overline{A}$0 to A = B	7	80	ns
T_C = 125°C		(Fig 4)	389	"	4.5 V	"	"	"	"	"	"				"	$\overline{A}$1 to A = B	"	"	"
		"	390	"	"	"	"	"	"	"	"				"	$\overline{A}$2 to A = B	"	"	"
		"	391	"	"	"	"	"	"	"	"				"	$\overline{A}$3 to A = B	"	"	"
		"	392	IN	"	"	"	"	"	"	"				"	$\overline{B}$0 to A = B	"	"	"
		"	393	GND	"	"	"	"	"	"	"				"	$\overline{B}$1 to A = B	"	"	"
		"	394	"	"	"	"	"	"	"	"				"	$\overline{B}$2 to A = B	"	"	"
		"	395	"	"	"	"	"	"	"	"				"	$\overline{B}$3 to A = B	"	"	"
	t_{PHL9}	"	396	GND	4.5 V	4.5 V	GND	GND	4.5 V	IN	GND				"	Cn to Cn+4	7	30	ns
	t_{PLH9}	"	397	GND	4.5 V	4.5 V	GND	GND	4.5 V	IN	GND				"	Cn to Cn+4	7	28	ns
	t_{PHL10}	"	398	4.5 V	4.5 V	GND	4.5 V	4.5 V	GND	IN	GND				"	Cn to Cn+4	7	30	ns
	t_{PLH10}	"	399	4.5 V	4.5 V	GND	4.5 V	4.5 V	GND	IN	GND				"	Cn to Cn+4	7	28	ns
	t_{PHL11}	"	400	GND	IN	4.5 V	GND	GND	4.5 V	GND	GND				"	$\overline{A}$0 to Cn + 4	7	41	ns
		"	401	4.5 V	GND	"	"	"	"	"	"				"	$\overline{A}$1 to Cn + 4	"	"	"
		"	402	"	"	"	"	"	"	"	"				"	$\overline{A}$2 to Cn + 4	"	"	"
		"	403	"	"	"	"	"	"	"	"				"	$\overline{A}$3 to Cn + 4	"	"	"
		"	404	IN	"	"	"	"	"	"	"				"	$\overline{B}$0 to Cn + 4	"	"	"
		"	405	4.5 V	"	"	"	"	"	"	"				"	$\overline{B}$1 to Cn + 4	"	"	"
		"	406	"	"	"	"	"	"	"	"				"	$\overline{B}$2 to Cn + 4	"	"	"
		"	407	"	"	"	"	"	"	"	"				"	$\overline{B}$3 to Cn + 4	"	"	"
	t_{PLH11}	"	408	GND	IN	4.5 V	GND	GND	4.5 V	GND	GND				"	$\overline{A}$0 to Cn + 4	7	50	ns
		"	409	4.5 V	GND	"	"	"	"	"	"				"	$\overline{A}$1 to Cn + 4	"	"	"
		"	410	"	"	"	"	"	"	"	"				"	$\overline{A}$2 to Cn + 4	"	"	"
		"	411	"	"	"	"	"	"	"	"				"	$\overline{A}$3 to Cn + 4	"	"	"
		"	412	IN	"	"	"	"	"	"	"				"	$\overline{B}$0 to Cn + 4	"	"	"
		"	413	4.5 V	"	"	"	"	"	"	"				"	$\overline{B}$1 to Cn + 4	"	"	"
		"	414	"	"	"	"	"	"	"	"				"	$\overline{B}$2 to Cn + 4	"	"	"
		"	415	"	"	"	"	"	"	"	"				"	$\overline{B}$3 to Cn + 4	"	"	"

See notes at end of table for device type 01.

TABLE III. Group A inspection for device type 01 - Continued. 1/

Subgroup	Symbol	MIL-STD-883 method	Case J, K, L, Z Test No.	13 $\overline{F}$ 3	14 A=B	15 $\overline{P}$	16 Cn+4	17 $\overline{G}$	18 $\overline{B}$ 3	19 $\overline{A}$ 3	20 $\overline{B}$ 2	21 $\overline{A}$ 2	22 $\overline{B}$ 1	23 $\overline{A}$ 1	24 V_{CC}	Meas terminal	Test limits Min	Test limits Max	Test limits Unit
10	t_{PLH8}	3003	388		OUT				GND	4.5 V	GND	4.5 V	GND	4.5 V	5.0 V	$\overline{A}0$ to A = B	7	80	ns
T_C = 125°C		(Fig 4)	389		"				"	"	"	4.5 V	"	IN	"	$\overline{A}1$ to A = B	"	"	"
		"	390		"				"	"	"	IN	"	4.5 V	"	$\overline{A}2$ to A = B	"	"	"
		"	391		"				"	IN	"	4.5 V	"	"	"	$\overline{A}3$ to A = B	"	"	"
		"	392		"				"	4.5 V	"	"	"	"	"	$\overline{B}0$ to A = B	"	"	"
		"	393		"				"	"	"	"	IN	"	"	$\overline{B}1$ to A = B	"	"	"
		"	394		"				"	"	IN	"	GND	"	"	$\overline{B}2$ to A = B	"	"	"
		"	395		"				IN	"	GND	"	GND	"	"	$\overline{B}3$ to A = B	"	"	"
	t_{PHL9}	"	396				OUT		GND	4.5 V	GND	4.5 V	GND	4.5 V	"	Cn to Cn+4	7	30	ns
	t_{PLH9}	"	397				"		GND	4.5 V	GND	4.5 V	GND	4.5 V	"	Cn to Cn+4	7	28	ns
	t_{PHL10}	"	398				"		4.5 V	4.5 V	4.5 V	4.5 V	4.5 V	4.5 V	"	Cn to Cn+4	7	30	ns
	t_{PLH10}	"	399				"		4.5 V	4.5 V	4.5 V	4.5 V	4.5 V	4.5 V	"	Cn to Cn+4	7	28	ns
	t_{PHL11}	"	400				"		4.5 V	GND	4.5 V	GND	4.5 V	GND	"	$\overline{A}0$ to Cn + 4	7	41	ns
		"	401				"		"	"	4.5 V	GND	GND	IN	"	$\overline{A}1$ to Cn + 4	"	"	"
		"	402				"		"	"	GND	IN	4.5 V	GND	"	$\overline{A}2$ to Cn + 4	"	"	"
		"	403				"		GND	IN	4.5 V	GND	"	"	"	$\overline{A}3$ to Cn + 4	"	"	"
		"	404				"		4.5 V	GND	"	"	"	"	"	$\overline{B}0$ to Cn + 4	"	"	"
		"	405				"		"	"	"	"	IN	"	"	$\overline{B}1$ to Cn + 4	"	"	"
		"	406				"		"	"	IN	"	4.5 V	"	"	$\overline{B}2$ to Cn + 4	"	"	"
		"	407				"		IN	"	4.5 V	"	4.5 V	"	"	$\overline{B}3$ to Cn + 4	"	"	"
	t_{PLH11}	"	408				"		4.5 V	GND	4.5 V	GND	4.5 V	GND	"	$\overline{A}0$ to Cn + 4	7	50	ns
		"	409				"		"	"	4.5 V	GND	GND	IN	"	$\overline{A}1$ to Cn + 4	"	"	"
		"	410				"		"	"	GND	IN	4.5 V	GND	"	$\overline{A}2$ to Cn + 4	"	"	"
		"	411				"		GND	IN	4.5 V	GND	"	"	"	$\overline{A}3$ to Cn + 4	"	"	"
		"	412				"		4.5 V	GND	"	"	"	"	"	$\overline{B}0$ to Cn + 4	"	"	"
		"	413				"		"	"	"	"	IN	"	"	$\overline{B}1$ to Cn + 4	"	"	"
		"	414				"		"	"	IN	"	4.5 V	"	"	$\overline{B}2$ to Cn + 4	"	"	"
		"	415				"		IN	"	4.5 V	"	4.5 V	"	"	$\overline{B}3$ to Cn + 4	"	"	"

See notes at end of table for device type 01.

TABLE III. Group A inspection for device type 01 - Continued. 1/

Subgroup	Symbol	MIL-STD-883 method	Case J, K, L, Z Test No.	1 $\overline{B}$ 0	2 $\overline{A}$ 0	3 S3	4 S2	5 S1	6 S0	7 Cn	8 M	9 $\overline{F}$ 0	10 $\overline{F}$ 1	11 $\overline{F}$ 2	12 GND	Meas terminal	Test limits Min	Max	Unit
10	t_{PHL12}	3003	416	4.5 V	IN	GND	4.5 V	4.5 V	GND	GND	GND				GND	$\overline{A}$0 to Cn + 4	7	50	ns
T_C = 125°C		(Fig 4)	417	GND	GND	"	"	"	"	"	"				"	$\overline{A}$1 to Cn + 4	"	"	"
		"	418	"	"	"	"	"	"	"	"				"	$\overline{A}$2 to Cn + 4	"	"	"
		"	419	"	"	"	"	"	"	"	"				"	$\overline{A}$3 to Cn + 4	"	"	"
		"	420	IN	"	"	"	"	"	"	"				"	$\overline{B}$0 to Cn + 4	"	"	"
		"	421	GND	"	"	"	"	"	"	"				"	$\overline{B}$1 to Cn + 4	"	"	"
		"	422	"	"	"	"	"	"	"	"				"	$\overline{B}$2 to Cn + 4	"	"	"
		"	423	"	"	"	"	"	"	"	"				"	$\overline{B}$3 to Cn + 4	"	"	"
	t_{PLH12}	"	424	4.5 V	IN	GND	4.5 V	4.5 V	GND	GND	GND				"	$\overline{A}$0 to Cn + 4	7	50	ns
		"	425	GND	GND	"	"	"	"	"	"				"	$\overline{A}$1 to Cn + 4	"	"	"
		"	426	"	"	"	"	"	"	"	"				"	$\overline{A}$2 to Cn + 4	"	"	"
		"	427	"	"	"	"	"	"	"	"				"	$\overline{A}$3 to Cn + 4	"	"	"
		"	428	IN	"	"	"	"	"	"	"				"	$\overline{B}$0 to Cn + 4	"	"	"
		"	429	GND	"	"	"	"	"	"	"				"	$\overline{B}$1 to Cn + 4	"	"	"
		"	430	"	"	"	"	"	"	"	"				"	$\overline{B}$2 to Cn + 4	"	"	"
		"	431	"	"	"	"	"	"	"	"				"	$\overline{B}$3 to Cn + 4	"	"	"
	t_{PHL13}	"	432	GND	IN	GND	4.5 V	4.5 V	GND	GND	4.5 V	OUT			"	$\overline{A}$ 0 to $\overline{F}$ 0	7	49	ns
		"	433	"	GND	"	"	"	"	"	"		OUT		"	$\overline{A}$ 1 to $\overline{F}$ 1	"	"	"
		"	434	"	"	"	"	"	"	"	"			OUT	"	$\overline{A}$ 2 to $\overline{F}$ 2	"	"	"
		"	435	"	"	"	"	"	"	"	"				"	$\overline{A}$ 3 to $\overline{F}$ 3	"	"	"
		"	436	IN	"	"	"	"	"	"	"	OUT			"	$\overline{B}$ 0 to $\overline{F}$ 0	"	"	"
		"	437	GND	"	"	"	"	"	"	"		OUT		"	$\overline{B}$ 1 to $\overline{F}$ 1	"	"	"
		"	438	"	"	"	"	"	"	"	"			OUT	"	$\overline{B}$ 2 to $\overline{F}$ 2	"	"	"
		"	439	"	"	"	"	"	"	"	"				"	$\overline{B}$ 3 to $\overline{F}$ 3	"	"	"
	t_{PLH13}	"	440	GND	IN	GND	4.5 V	4.5 V	GND	GND	4.5 V	OUT			"	$\overline{A}$ 0 to $\overline{F}$ 0	7	69	ns
		"	441	"	GND	"	"	"	"	"	"		OUT		"	$\overline{A}$ 1 to $\overline{F}$ 1	"	"	"
		"	442	"	"	"	"	"	"	"	"			OUT	"	$\overline{A}$ 2 to $\overline{F}$ 2	"	"	"
		"	443	"	"	"	"	"	"	"	"				"	$\overline{A}$ 3 to $\overline{F}$ 3	"	"	"
		"	444	IN	"	"	"	"	"	"	"	OUT			"	$\overline{B}$ 0 to $\overline{F}$ 0	"	"	"
		"	445	GND	"	"	"	"	"	"	"		OUT		"	$\overline{B}$ 1 to $\overline{F}$ 1	"	"	"
		"	446	"	"	"	"	"	"	"	"			OUT	"	$\overline{B}$ 2 to $\overline{F}$ 2	"	"	"
		"	447	"	"	"	"	"	"	"	"				"	$\overline{B}$ 3 to $\overline{F}$ 3	"	"	"
11	Same tests, terminal conditions and limits as subgroup 10, except T_C = -55°C.																		

See notes at end of table for device type 01.

TABLE III. Group A inspection for device type 01 - Continued. 1/

Subgroup	Symbol	MIL-STD-883 method	Case J, K, L, Z Test No.	13 $\overline{F}$ 3	14 A=B	15 $\overline{P}$	16 Cn+4	17 $\overline{G}$	18 $\overline{B}$ 3	19 $\overline{A}$ 3	20 $\overline{B}$ 2	21 $\overline{A}$ 2	22 $\overline{B}$ 1	23 $\overline{A}$ 1	24 V_{CC}	Meas terminal	Test limits Min	Test limits Max	Test limits Unit
10	t_{PHL12}	3003	416				OUT		GND	GND	GND	GND	GND	GND	5.0 V	$\overline{A}$0 to Cn + 4	7	50	ns
T_C = 125°C		(Fig 4)	417				"		"	"	GND	GND	4.5 V	IN	"	$\overline{A}$1 to Cn + 4	"	"	"
		"	418				"		"	"	4.5 V	IN	GND	GND	"	$\overline{A}$2 to Cn + 4	"	"	"
		"	419				"		4.5 V	IN	GND	GND	"	"	"	$\overline{A}$3 to Cn + 4	"	"	"
		"	420				"		GND	GND	"	"	"	"	"	$\overline{B}$0 to Cn + 4	"	"	"
		"	421				"		"	"	"	"	IN	"	"	$\overline{B}$1 to Cn + 4	"	"	"
		"	422				"		"	"	IN	"	GND	"	"	$\overline{B}$2 to Cn + 4	"	"	"
		"	423				"		IN	"	GND	"	GND	"	"	$\overline{B}$3 to Cn + 4	"	"	"
	t_{PLH12}	"	424				"		GND	GND	GND	GND	GND	GND	"	$\overline{A}$0 to Cn + 4	7	50	ns
		"	425				"		"	"	GND	GND	4.5 V	IN	"	$\overline{A}$1 to Cn + 4	"	"	"
		"	426				"		"	"	4.5 V	IN	GND	GND	"	$\overline{A}$2 to Cn + 4	"	"	"
		"	427				"		4.5 V	IN	GND	GND	"	"	"	$\overline{A}$3 to Cn + 4	"	"	"
		"	428				"		GND	GND	"	"	"	"	"	$\overline{B}$0 to Cn + 4	"	"	"
		"	429				"		"	"	"	"	IN	"	"	$\overline{B}$1 to Cn + 4	"	"	"
		"	430				"		"	"	IN	"	GND	"	"	$\overline{B}$2 to Cn + 4	"	"	"
		"	431				"		IN	"	GND	"	GND	"	"	$\overline{B}$3 to Cn + 4	"	"	"
	t_{PHL13}	"	432						GND	GND	GND	GND	GND	GND	"	$\overline{A}$ 0 to $\overline{F}$ 0	7	49	ns
		"	433						"	"	"	GND	"	IN	"	$\overline{A}$ 1 to $\overline{F}$ 1	"	"	"
		"	434						"	"	"	IN	"	GND	"	$\overline{A}$ 2 to $\overline{F}$ 2	"	"	"
		"	435	OUT					"	IN	"	GND	"	"	"	$\overline{A}$ 3 to $\overline{F}$ 3	"	"	"
		"	436						"	GND	"	"	"	"	"	$\overline{B}$ 0 to $\overline{F}$ 0	"	"	"
		"	437						"	"	"	"	IN	"	"	$\overline{B}$ 1 to $\overline{F}$ 1	"	"	"
		"	438						"	"	IN	"	GND	"	"	$\overline{B}$ 2 to $\overline{F}$ 2	"	"	"
		"	439	OUT					IN	"	GND	"	GND	"	"	$\overline{B}$ 3 to $\overline{F}$ 3	"	"	"
	t_{PLH13}	"	440						GND	GND	GND	GND	GND	GND	"	$\overline{A}$ 0 to $\overline{F}$ 0	7	69	ns
		"	441						"	"	"	GND	"	IN	"	$\overline{A}$ 1 to $\overline{F}$ 1	"	"	"
		"	442						"	"	"	IN	"	GND	"	$\overline{A}$ 2 to $\overline{F}$ 2	"	"	"
		"	443	OUT					"	IN	"	GND	"	"	"	$\overline{A}$ 3 to $\overline{F}$ 3	"	"	"
		"	444						"	GND	"	"	"	"	"	$\overline{B}$ 0 to $\overline{F}$ 0	"	"	"
		"	445						"	"	"	"	IN	"	"	$\overline{B}$ 1 to $\overline{F}$ 1	"	"	"
		"	446						"	"	IN	"	GND	"	"	$\overline{B}$ 2 to $\overline{F}$ 2	"	"	"
		"	447	OUT					IN	"	GND	"	GND	"	"	$\overline{B}$ 3 to $\overline{F}$ 3	"	"	"
11	Same tests, terminal conditions and limits as subgroup 10, except T_C = -55°C.																		

See notes on next page.

TABLE III. Group A inspection for device type 01 - Continued. 1/

1/ Terminal conditions (Pins not designated may be H ≥ 2.0 V, or L ≤ 0.8 V, or open).
2/ Tests shall be performed in sequence.
3/ Input voltages shown are: A = 2.0 V minimum and B = 0.8 V maximum.
4/ Output voltages shall be either: (a) H = 2.4 V, minimum and L = 0.4 V, maximum when using a high speed checker double comparator; or (b) H ≥ 1.5 V and L < 1.5 V when using a high speed checker single comparator.

TABLE III. Group A inspection for device type 02. 1/

Subgroup	Symbol	MIL-STD-883 method	Cases E, F Test No.	1 $\overline{G}$ 1	2 $\overline{P}$ 1	3 $\overline{G}$ 0	4 $\overline{P}$ 0	5 $\overline{G}$ 3	6 $\overline{P}$ 3	7 $\overline{P}$	8 GND	9 Cn+z	10 $\overline{G}$	11 Cn+y	12 Cn+x	13 Cn	14 $\overline{G}$ 2	15 $\overline{P}$ 2	16 V_{CC}	Meas. terminal	Test limits Min	Test limits Max	Test limits Unit
1 T_C = 25°C	V_{OH}	3006	1		0.8 V		2.0 V		0.8 V	-.8 mA	GND							0.8 V	4.5 V	$\overline{P}$	2.4		V
		"	2	2.0 V	2.0 V	2.0 V	2.0 V				"	-.8 mA				0.8 V	0.8 V	2.0 V	"	Cn+z	"		"
		"	3	0.8 V	0.8 V	0.8 V		2.0 V	2.0 V		"		-.8 mA				0.8 V	0.8 V	"	$\overline{G}$	"		"
		"	4	0.8 V	2.0 V	2.0 V	2.0 V				"			-.8 mA		0.8 V			"	Cn+y	"		"
		"	5			0.8 V	2.0 V				"				-.8 mA	0.8 V			"	Cn+x	"		"
	V_{OL}	3007	6		0.8 V		0.8 V		0.8 V	16 mA	"							0.8 V	"	$\overline{P}$		0.4	"
		"	7	0.8 V	0.8 V	0.8 V	0.8 V				"	16 mA				2.0 V	2.0 V	2.0 V	"	Cn+z		"	"
		"	8	2.0 V	2.0 V	2.0 V		0.8 V	2.0 V		"		16 mA				2.0 V	2.0 V	"	$\overline{G}$		"	"
		"	9	2.0 V	2.0 V	0.8 V					"			16 mA		2.0 V			"	Cn+y		"	"
		"	10			2.0 V	2.0 V				"				16 mA	2.0 V			"	Cn+x		"	"
	V_{IC}		11	-12 mA							"								"	$\overline{G}$ 1		-1.5	"
			12		-12 mA						"								"	$\overline{P}$ 1		"	"
			13			-12 mA					"								"	$\overline{G}$ 0		"	"
			14				-12 mA				"								"	$\overline{P}$ 0		"	"
			15					-12 mA			"								"	$\overline{G}$ 3		"	"
			16						-12 mA		"								"	$\overline{P}$ 3		"	"
			17								"					-12 mA			"	Cn		"	"
			18								"						-12 mA		"	$\overline{G}$ 2		"	"
			19								"							-12 mA	"	$\overline{P}$ 2		"	"
	I_{IL7}	3009	20 CKT A	0.4 V	5.5 V	5.5 V	5.5 V	5.5 V	5.5 V		"					GND	5.5 V	5.5 V	5.5 V	$\overline{G}$ 1	-5.6	-12.8	mA
	I_{IL7}	"	20 CKT B,C	0.4 V	5.5 V	"	"	"	"		"					GND	"	"	"	$\overline{G}$ 1	-8.0	-16.0	"
	I_{IL8}	"	21 CKT A	5.5 V	0.4 V	"	"	"	"		"					5.5 V	"	"	"	$\overline{P}$ 1	-2.8	-6.4	"
	I_{IL8}	"	21 CKT B,C	"	0.4 V	"	"	"	"		"					5.5 V	"	"	"	$\overline{P}$ 1	-4.0	-8.0	"
	I_{IL9}	"	22 CKT A	"	5.5 V	0.4 V	"	"	"		"					GND	"	"	"	$\overline{G}$ 0	-4.9	-11.2	"
	I_{IL9}	"	22 CKT B,C	"	"	0.4 V	"	"	"		"					GND	"	"	"	$\overline{G}$ 0	-7.0	-14.0	"
	I_{IL10}	"	23 CKT A	"	"	5.5 V	0.4 V	"	"		"					5.5 V	"	"	"	$\overline{P}$ 0	-2.8	-6.4	"
	I_{IL10}	"	23 CKT B,C	"	"	"	0.4 V	"	"		"					"	"	"	"	$\overline{P}$ 0	-4.0	-8.0	"
	I_{IL11}	"	24 CKT A	"	"	"	5.5 V	0.4 V	"		"					"	"	"	"	$\overline{G}$ 3	-2.8	-6.4	"
	I_{IL11}	"	24 CKT B,C	"	"	"	"	0.4 V	"		"					"	"	"	"	$\overline{G}$ 3	4.0	-8.0	"
	I_{IL12}	"	25 CKT A	"	"	"	"	5.5 V	0.4 V		"					"	"	"	"	$\overline{P}$ 3	-1.4	-3.2	"
	I_{IL12}	"	25 CKT B,C	"	"	"	"	"	0.4 V		"					"	"	"	"	$\overline{P}$ 3	-2.0	-4.0	"
	I_{IL13}	"	26 CKT A	"	"	"	"	"	5.5 V		"					0.4 V	"	"	"	Cn	-0.7	-1.6	"
	I_{IL13}	"	26 CKT B,C	"	"	"	"	"	5.5 V		"					0.4 V	"	"	"	Cn	-1.0	-2.4	"

See notes at end of table for device type 02.

TABLE III. Group A inspection for device type 02. 1/

Subgroup	Symbol	MIL-STD-883 method	Cases E, F	1	2	3	4	5	6	7	8	9	10	11	12	13	14	15	16	Meas. terminal	Test limits		
			Test No.	$\overline{G}$ 1	$\overline{P}$ 1	$\overline{G}$ 0	$\overline{P}$ 0	$\overline{G}$ 3	$\overline{P}$ 3	$\overline{P}$	GND	Cn+z	$\overline{G}$	Cn+y	Cn+x	Cn	$\overline{G}$ 2	$\overline{P}$ 2	V_{CC}		Min	Max	Unit
1	I_{IL14}	3009	27 CKT A	5.5 V	5.5 V	5.5 V	5.5 V	5.5 V	5.5 V		GND					GND	0.4 V	5.5 V	5.5 V	$\overline{G}$ 2	-4.9	-11.2	mA
T_C = 25°C	I_{IL14}	"	27 CKT B,C	"	"	"	"	"	"		"					GND	0.4 V	5.5 V	"	$\overline{G}$ 2	-7.0	-14.0	"
	I_{IL15}	"	28 CKT A	"	"	"	"	"	"		"					5.5 V	5.5 V	0.4 V	"	$\overline{P}$ 2	-2.1	-4.8	"
	I_{IL15}	"	28 CKT B,C	"	"	"	"	"	"		"					5.5 V	5.5 V	0.4 V	"	$\overline{P}$ 2	-3.0	-6.0	"
	I_{IH11}	3010	29 CKT A	2.4 V	GND	GND	GND	GND	GND		"					5.5 V	GND	GND	5.5 V	$\overline{G}$ 1		320	µA
	I_{IH11}	"	29 CKT B,C	2.4 V	GND	"	"	"	"		"					5.5 V	"	"	"	$\overline{G}$ 1		400	"
	I_{IH12}	"	30 CKT A	GND	2.4 V	"	"	"	"		"					GND	"	"	"	$\overline{P}$ 1		160	"
	I_{IH12}	"	30 CKT B,C	"	2.4 V	"	"	"	"		"					GND	"	"	"	$\overline{P}$ 1		200	"
	I_{IH13}	"	31 CKT A	"	GND	2.4 V	"	"	"		"					5.5 V	"	"	"	$\overline{G}$ 0		280	"
	I_{IH13}	"	31 CKT B,C	"	"	2.4 V	"	"	"		"					5.5 V	"	"	"	$\overline{G}$ 0		350	"
	I_{IH14}	"	32 CKT A	"	"	GND	2.4 V	"	"		"					GND	"	"	"	$\overline{P}$ 0		160	"
	I_{IH14}	"	32 CKT B,C	"	"	"	2.4 V	"	"		"					"	"	"	"	$\overline{P}$ 0		200	"
	I_{IH15}	"	33 CKT A	"	"	"	GND	2.4 V	"		"					"	"	"	"	$\overline{G}$ 3		160	"
	I_{IH15}	"	33 CKT B,C	"	"	"	"	2.4 V	"		"					"	"	"	"	$\overline{G}$ 3		200	"
	I_{IH16}	"	34 CKT A	"	"	"	"	GND	2.4 V		"					"	"	"	"	$\overline{P}$ 3		80	"
	I_{IH16}	"	34 CKT B,C	"	"	"	"	"	2.4 V		"					"	"	"	"	$\overline{P}$ 3		100	"
	I_{IH17}	"	35 CKT A	"	"	"	"	"	GND		"					2.4 V	"	"	"	Cn		40	"
	I_{IH17}	"	35 CKT B,C	"	"	"	"	"	"		"					2.4 V	"	"	"	Cn		70	"
	I_{IH18}	"	36 CKT A	"	"	"	"	"	"		"					5.5 V	2.4 V	"	"	$\overline{G}$ 2		280	"
	I_{IH18}	"	36 CKT B,C	"	"	"	"	"	"		"					5.5 V	2.4 V	"	"	$\overline{G}$ 2		350	"
	I_{IH19}	"	37 CKT A	"	"	"	"	"	"		"					GND	GND	2.4 V	"	$\overline{P}$ 2		120	"
	I_{IH19}	"	37 CKT B,C	"	"	"	"	"	"		"					GND	"	2.4 V	"	$\overline{P}$ 2		150	"
	I_{IH20}	"	38	5.5 V	"	"	"	"	"		"					5.5 V	"	GND	"	$\overline{G}$ 1		800	"
	I_{IH21}	"	39	GND	5.5 V	"	"	"	"		"					GND	"	"	"	$\overline{P}$ 1		400	"
	I_{IH22}	"	40	"	GND	5.5 V	"	"	"		"					5.5 V	"	"	"	$\overline{G}$ 0		700	"
	I_{IH23}	"	41	"	"	GND	5.5 V	"	"		"					GND	"	"	"	$\overline{P}$ 0		400	"
	I_{IH24}	"	42	"	"	"	GND	5.5 V	"		"					"	"	"	"	$\overline{G}$ 3		400	"
	I_{IH25}	"	43	"	"	"	"	GND	5.5 V		"					"	"	"	"	$\overline{P}$ 3		200	"
	I_{IH26}	"	44	"	"	"	"	"	GND		"					5.5 V	"	"	"	Cn		160	"
	I_{IH27}	"	45	"	"	"	"	"	"		"					5.5 V	5.5 V	"	"	$\overline{G}$ 2		700	"
	I_{IH28}	"	46	"	"	"	"	"	"		"					GND	GND	5.5 V	"	$\overline{P}$ 2		300	"
	I_{OS4}	3011	47		5.5 V		5.5 V		5.5 V	GND	"							5.5 V	"	$\overline{P}$	-40	-100	mA
		"	48	GND	GND	GND	GND				"	GND				5.5 V	GND	GND	"	Cn+z	"	"	"
		"	49	5.5 V	5.5 V	5.5 V		5.5 V	5.5 V		"		GND				5.5 V	5.5 V	"	$\overline{G}$	"	"	"
		"	50	GND	GND	GND	GND				"			GND		5.5 V			"	Cn+y	"	"	"
		"	51			GND	GND				"				GND	5.5 V			"	Cn+x	"	"	"

See notes at end of table for device type 02.

TABLE III. Group A inspection for device type 02. 1/

Subgroup	Symbol	MIL-STD-883 method	Cases E, F Test No.	1 $\overline{G}$ 1	2 $\overline{P}$ 1	3 $\overline{G}$ 0	4 $\overline{P}$ 0	5 $\overline{G}$ 3	6 $\overline{P}$ 3	7 $\overline{P}$	8 GND	9 Cn+z	10 $\overline{G}$	11 Cn+y	12 Cn+x	13 Cn	14 $\overline{G}$ 2	15 $\overline{P}$ 2	16 V_{CC}	Meas. terminal	Test limits Min	Max	Unit
1	I_{CCL2}	3005	52	5.5 V	GND	5.5 V	GND	GND	GND		GND					GND	5.5 V	GND	5.5 V	V_{CC}		65	mA
T_C = 25°C	I_{CCH2}	"	53 CKT A	GND	GND	5.5 V	GND	5.5 V	5.5 V		"					GND	GND	GND	"	V_{CC}		35	"
	I_{CCH2}	"	53 CKT B,C	GND	GND	GND	GND	5.5 V	5.5 V		"					GND	GND	GND	"	V_{CC}		55	"
2	Same tests, terminal conditions and limits as for subgroup 1, except T_C = 125°C and V_{IC} tests are omitted.																						
3	Same tests, terminal conditions and limits as for subgroup 1, except T_C = -55°C and V_{IC} tests are omitted.																						
7 2/ 3/			54	B	B	B	B	B	B	L 4/	GND	H 4/	L 4/	H 4/	H 4/	B	B	B	4.5 V	All	H or L		
T_C = 25°C			55	B	B	A	A	A	B	H	"	H	L	H	L	A	A	"	"	outputs	as shown 4/		
			56	A	A	B	B	A	B	"	"	L	H	L	H	B	"	"	"				
			57	A	B	A	"	B	A	"	"	H	L	H	H	A	"	"	"				
			58	B	A	"	"	A	B	"	"	"	L	H	L	B	"	"	"				
			59	A	B	"	"	"	A	"	"	"	H	L	L	B	B	"	"				
			60	B	"	B	A	"	B	"	"	L	H	H	H	A	A	A	"				
			61	A	"	B	"	"	"	"	"	H	L	H	H	B	B	A	"				
			62	"	"	A	"	"	"	"	"	L	H	L	L	A	A	B	"				
			63	"	"	B	"	"	"	"	"	H	L	H	H	B	A	B	"				
			64	"	"	A	B	"	"	"	"	H	"	L	L	B	B	A	"				
			65	"	A	B	B	B	"	"	"	L	"	"	H	A	A	A	"				
			66	"	A	A	A	A	"	"	"	H	"	"	L	B	B	A	"				
			67	"	B	A	B	A	"	L	"	L	H	"	L	B	A	B	"				
8 2/ 3/	Same tests, terminal conditions and limits as for subgroup 7, except T_C = 125°C and -55°C..																						
9	t_{PLH1}	3003	68	4.5 V	GND	4.5 V	GND	4.5 V	4.5 V		GND				OUT	IN	4.5 V	GND	5.0 V	Cn to Cn+x	6	22	ns
T_C = 25°C	t_{PHL1}	Fig 4	69	"	"	"	"	"	"		"				OUT	"	"	"	"	Cn to Cn+x	"	24	"
	t_{PLH1}	"	70	"	"	"	"	"	"		"			OUT		"	"	"	"	Cn to Cn+y	"	22	"
	t_{PHL1}	"	71	"	"	"	"	"	"		"			OUT		"	"	"	"	Cn to Cn+y	"	24	"
	t_{PLH1}	"	72	"	"	"	"	"	"		"	OUT				"	"	"	"	Cn to Cn+z	"	22	"
	t_{PHL1}	"	73	"	"	"	"	"	"		"	OUT				"	"	"	"	Cn to Cn+z	"	24	"
	t_{PLH2}	"	74	"	"	"	IN	"	"		"				OUT	4.5 V	"	"	"	$\overline{P}$ 0 to Cn+x	3	16	"
	t_{PHL2}	"	75	"	"	"	IN	"	"		"				OUT	"	"	"	"	$\overline{P}$ 0 to Cn+x	"	21	"
	t_{PLH2}	"	76	"	"	"	IN	"	"		"			OUT		"	"	"	"	$\overline{P}$ 0 to Cn+y	"	16	"
	t_{PHL2}	"	77	"	"	"	IN	"	"		"			OUT		"	"	"	"	$\overline{P}$ 0 to Cn+y	"	21	"

See notes at end of table for device type 02.

TABLE III. Group A inspection for device type 02. 1/

Subgroup	Symbol	MIL-STD-883 method	Cases E, F	1	2	3	4	5	6	7	8	9	10	11	12	13	14	15	16	Meas. terminal	Test limits		
			Test No.	$\overline{G}$ 1	$\overline{P}$ 1	$\overline{G}$ 0	$\overline{P}$ 0	$\overline{G}$ 3	$\overline{P}$ 3	$\overline{P}$	GND	Cn+z	$\overline{G}$	Cn+y	Cn+x	Cn	$\overline{G}$ 2	$\overline{P}$ 2	V_{CC}		Min	Max	Unit
9	t_{PLH2}	3003	78	4.5 V	GND	4.5 V	IN	4.5 V	4.5 V		GND	OUT				4.5 V	4.5 V	GND	5.0 V	$\overline{P}$ 0 to Cn+z	3	16	ns
T_C = 25°C	t_{PHL2}	Fig 4	79	"	GND	"	IN	"	"		"	OUT				"	"	"	"	$\overline{P}$ 0 to Cn+z	"	21	"
	t_{PLH2}	"	80	"	IN	"	GND	"	"		"			OUT		"	"	"	"	$\overline{P}$ 1 to Cn+y	"	16	"
	t_{PHL2}	"	81	"	"	"	"	"	"		"			OUT		"	"	"	"	$\overline{P}$ 1 to Cn+y	"	21	"
	t_{PLH2}	"	82	"	"	"	"	"	"		"	OUT				"	"	"	"	$\overline{P}$ 1 to Cn+z	"	16	"
	t_{PHL2}	"	83	"	"	"	"	"	"		"	"				"	"	"	"	$\overline{P}$ 1 to Cn+z	"	21	"
	t_{PLH2}	"	84	"	GND	"	"	"	"		"	"				"	"	IN	"	$\overline{P}$ 2 to Cn+z	"	16	"
	t_{PHL2}	"	85	"	"	"	"	"	"		"	"				"	"	IN	"	$\overline{P}$ 2 to Cn+z	"	21	"
	t_{PLH3}	"	86	"	"	IN	"	"	"		"				OUT	GND	"	GND	"	$\overline{G}$ 0 to Cn+x	"	16	"
	t_{PHL3}	"	87	"	"	"	"	"	"		"				OUT	"	"	"	"	$\overline{G}$ 0 to Cn+x	"	21	"
	t_{PLH3}	"	88	"	"	"	"	"	"		"			OUT		"	"	"	"	$\overline{G}$ 0 to Cn+y	"	16	"
	t_{PHL3}	"	89	"	"	"	"	"	"		"			OUT		"	"	"	"	$\overline{G}$ 0 to Cn+y	"	21	"
	t_{PLH3}	"	90	"	"	"	"	"	"		"	OUT				"	"	"	"	$\overline{G}$ 0 to Cn+z	"	16	"
	t_{PHL3}	"	91	"	"	"	"	"	"		"	OUT				"	"	"	"	$\overline{G}$ 0 to Cn+z	"	21	"
	t_{PLH3}	"	92	IN	"	4.5 V	"	"	"		"			OUT		"	"	"	"	$\overline{G}$ 1 to Cn+y	"	16	"
	t_{PHL3}	"	93	IN	"	"	"	"	"		"			OUT		"	"	"	"	$\overline{G}$ 1 to Cn+y	"	21	"
	t_{PLH3}	"	94	IN	"	"	"	"	"		"	OUT				"	"	"	"	$\overline{G}$ 1 to Cn+z	"	16	"
	t_{PHL3}	"	95	IN	"	"	"	"	"		"	"				"	"	"	"	$\overline{G}$ 1 to Cn+z	"	21	"
	t_{PLH3}	"	96	4.5 V	"	"	"	"	"		"	"				"	IN	"	"	$\overline{G}$ 2 to Cn+z	"	16	"
	t_{PHL3}	"	97	4.5 V	"	"	"	"	"		"	"				"	IN	"	"	$\overline{G}$ 2 to Cn+z	"	21	"

See notes at end of table for device type 02.

TABLE III. Group A inspection for device type 02. 1/

Subgroup	Symbol	MIL-STD-883 method	Cases E, F Test No.	1 $\overline{G}$ 1	2 $\overline{P}$ 1	3 $\overline{G}$ 0	4 $\overline{P}$ 0	5 $\overline{G}$ 3	6 $\overline{P}$ 3	7 $\overline{P}$	8 GND	9 Cn+z	10 $\overline{G}$	11 Cn+y	12 Cn+x	13 Cn	14 $\overline{G}$ 2	15 $\overline{P}$ 2	16 V_{CC}	Meas. terminal	Test limits Min	Max	Unit
9	t_{PLH4}	3003	98	4.5 V	IN	GND	GND	4.5 V	GND		GND		OUT			4.5 V	4.5 V	GND	5.0 V	$\overline{P}$ 1 to $\overline{G}$	3	21	ns
T_C = 25°C	t_{PHL4}	Fig 4	99	"	IN	"	"	"	"		"		"			"	"	GND	"	$\overline{P}$ 1 to $\overline{G}$	"	25	"
	t_{PLH4}	"	100	"	GND	"	"	"	"		"		"			"	"	IN	"	$\overline{P}$ 2 to $\overline{G}$	"	21	"
	t_{PHL4}	"	101	"	"	"	"	"	"		"		"			"	"	IN	"	$\overline{P}$ 2 to $\overline{G}$	"	25	"
	t_{PLH4}	"	102	"	"	"	"	"	IN		"		"			"	"	GND	"	$\overline{P}$ 3 to $\overline{G}$	"	21	"
	t_{PHL4}	"	103	"	"	"	"	"	IN		"		"			"	"	"	"	$\overline{P}$ 3 to $\overline{G}$	"	25	"
	t_{PLH5}	"	104	"	"	IN	"	"	GND		"		"			"	"	"	"	$\overline{G}$ 0 to $\overline{G}$	"	21	"
	t_{PHL5}	"	105	"	"	IN	"	"	"		"		"			"	"	"	"	$\overline{G}$ 0 to $\overline{G}$	"	25	"
	t_{PLH5}	"	106	IN	"	4.5 V	"	"	"		"		"			"	"	"	"	$\overline{G}$ 1 to $\overline{G}$	"	21	"
	t_{PHL5}	"	107	IN	"	"	"	"	"		"		"			"	"	"	"	$\overline{G}$ 1 to $\overline{G}$	"	25	"
	t_{PLH5}	"	108	4.5 V	"	"	"	"	"		"		"			"	IN	"	"	$\overline{G}$ 2 to $\overline{G}$	"	21	"
	t_{PHL5}	"	109	"	"	"	"	"	"		"		"			"	IN	"	"	$\overline{G}$ 2 to $\overline{G}$	"	25	"
	t_{PLH5}	"	110	"	"	"	"	IN	"		"		"			"	4.5 V	"	"	$\overline{G}$ 3 to $\overline{G}$	"	21	"
	t_{PHL5}	"	111	"	"	"	"	IN	"		"		"			"	"	"	"	$\overline{G}$ 3 to $\overline{G}$	"	25	"
	t_{PLH6}	"	112	"	"	"	IN	4.5 V	"	OUT	"					"	"	"	"	$\overline{P}$ 0 to $\overline{P}$	"	21	"
	t_{PHL6}	"	113	"	"	"	IN	"	"	"	"					"	"	"	"	$\overline{P}$ 0 to $\overline{P}$	"	25	"
	t_{PLH6}	"	114	"	IN	"	GND	"	"	"	"					"	"	"	"	$\overline{P}$ 1 to $\overline{P}$	"	21	"
	t_{PHL6}	"	115	"	IN	"	"	"	"	"	"					"	"	"	"	$\overline{P}$ 1 to $\overline{P}$	"	25	"
	t_{PLH6}	"	116	"	GND	"	"	"	"	"	"					"	"	IN	"	$\overline{P}$ 2 to $\overline{P}$	"	21	"
	t_{PHL6}	"	117	"	"	"	"	"	"	"	"					"	"	IN	"	$\overline{P}$ 2 to $\overline{P}$	"	25	"
	t_{PLH6}	"	118	"	"	"	"	"	IN	"	"					"	"	GND	"	$\overline{P}$ 3 to $\overline{P}$	"	21	"
	t_{PHL6}	"	119	"	"	"	"	"	IN	"	"					"	"	GND	"	$\overline{P}$ 3 to $\overline{P}$	"	25	"
10	t_{PLH1}	"	120	4.5 V	GND	4.5 V	GND	4.5 V	4.5 V		GND				OUT	IN	4.5 V	GND	5.0 V	Cn to Cn+x	6	29	ns
T_C = 125°C	t_{PHL1}	"	121	"	"	"	"	"	"		"				OUT	"	"	"	"	Cn to Cn+x	"	35	"
	t_{PLH1}	"	122	"	"	"	"	"	"		"			OUT		"	"	"	"	Cn to Cn+y	"	29	"
	t_{PHL1}	"	123	"	"	"	"	"	"		"			OUT		"	"	"	"	Cn to Cn+y	"	35	"
	t_{PLH1}	"	124	"	"	"	"	"	"		"	OUT				"	"	"	"	Cn to Cn+z	"	29	"
	t_{PHL1}	"	125	"	"	"	"	"	"		"	OUT				"	"	"	"	Cn to Cn+z	"	35	"
	t_{PLH2}	"	126	"	"	"	IN	"	"		"				OUT	4.5 V	"	"	"	$\overline{P}$ 0 to Cn+x	3	25	"
	t_{PHL2}	"	127	"	"	"	"	"	"		"				OUT	"	"	"	"	$\overline{P}$ 0 to Cn+x	"	32	"
	t_{PLH2}	"	128	"	"	"	"	"	"		"			OUT		"	"	"	"	$\overline{P}$ 0 to Cn+y	"	25	"
	t_{PHL2}	"	129	"	"	"	"	"	"		"			OUT		"	"	"	"	$\overline{P}$ 0 to Cn+y	"	32	"

See notes at end of table for device type 02.

TABLE III. Group A inspection for device type 02. 1/

Subgroup	Symbol	MIL-STD-883 method	Cases E, F	1	2	3	4	5	6	7	8	9	10	11	12	13	14	15	16	Meas. terminal	Test limits		
			Test No.	$\overline{G}$ 1	$\overline{P}$ 1	$\overline{G}$ 0	$\overline{P}$ 0	$\overline{G}$ 3	$\overline{P}$ 3	$\overline{P}$	GND	Cn+z	$\overline{G}$	Cn+y	Cn+x	Cn	$\overline{G}$ 2	$\overline{P}$ 2	V_{CC}		Min	Max	Unit
10	t_{PLH2}	3003	130	4.5 V	GND	4.5 V	IN	4.5 V	4.5 V		GND	OUT				4.5 V	4.5 V	GND	5.0 V	$\overline{P}$ 0 to Cn+z	3	25	ns
T_C = 125°C	t_{PHL2}	Fig 4	131	"	"	"	IN	"	"		"	OUT				"	"	"	"	$\overline{P}$ 0 to Cn+z	"	32	"
	t_{PLH2}	"	132	"	IN	"	GND	"	"		"			OUT		"	"	"	"	$\overline{P}$ 1 to Cn+y	"	25	"
	t_{PHL2}	"	133	"	"	"	"	"	"		"			OUT		"	"	"	"	$\overline{P}$ 1 to Cn+y	"	32	"
	t_{PLH2}	"	134	"	"	"	"	"	"		"	OUT				"	"	"	"	$\overline{P}$ 1 to Cn+z	"	25	"
	t_{PHL2}	"	135	"	"	"	"	"	"		"	"				"	"	"	"	$\overline{P}$ 1 to Cn+z	"	32	"
	t_{PLH2}	"	136	"	GND	"	"	"	"		"	"				"	"	IN	"	$\overline{P}$ 2 to Cn+z	"	25	"
	t_{PHL2}	"	137	"	"	"	"	"	"		"	"				"	"	IN	"	$\overline{P}$ 2 to Cn+z	"	32	"
	t_{PLH3}	"	138	"	"	IN	"	"	"		"				OUT	GND	"	GND	"	$\overline{G}$ 0 to Cn+x	"	25	"
	t_{PHL3}	"	139	"	"	"	"	"	"		"				OUT	"	"	"	"	$\overline{G}$ 0 to Cn+x	"	32	"
	t_{PLH3}	"	140	"	"	"	"	"	"		"			OUT		"	"	"	"	$\overline{G}$ 0 to Cn+y	"	25	"
	t_{PHL3}	"	141	"	"	"	"	"	"		"			OUT		"	"	"	"	$\overline{G}$ 0 to Cn+y	"	32	"
	t_{PLH3}	"	142	"	"	"	"	"	"		"	OUT				"	"	"	"	$\overline{G}$ 0 to Cn+z	"	25	"
	t_{PHL3}	"	143	"	"	"	"	"	"		"	OUT				"	"	"	"	$\overline{G}$ 0 to Cn+z	"	32	"
	t_{PLH3}	"	144	IN	"	4.5 V	"	"	"		"			OUT		"	"	"	"	$\overline{G}$ 1 to Cn+y	"	25	"
	t_{PHL3}	"	145	"	"	"	"	"	"		"			OUT		"	"	"	"	$\overline{G}$ 1 to Cn+y	"	32	"
	t_{PLH3}	"	146	"	"	"	"	"	"		"	OUT				"	"	"	"	$\overline{G}$ 1 to Cn+z	"	25	"
	t_{PHL3}	"	147	"	"	"	"	"	"		"	"				"	"	"	"	$\overline{G}$ 1 to Cn+z	"	32	"
	t_{PLH3}	"	148	4.5 V	"	"	"	"	"		"	"				"	IN	"	"	$\overline{G}$ 2 to Cn+z	"	25	"
	t_{PHL3}	"	149	"	"	"	"	"	"		"	"				"	IN	"	"	$\overline{G}$ 2 to Cn+z	"	32	"

See notes at end of table for device type 02.

TABLE III. Group A inspection for device type 02. 1/

Subgroup	Symbol	MIL-STD-883 method	Cases E, F Test No.	1 $\overline{G}$ 1	2 $\overline{P}$ 1	3 $\overline{G}$ 0	4 $\overline{P}$ 0	5 $\overline{G}$ 3	6 $\overline{P}$ 3	7 $\overline{P}$	8 GND	9 Cn+z	10 $\overline{G}$	11 Cn+y	12 Cn+x	13 Cn	14 $\overline{G}$ 2	15 $\overline{P}$ 2	16 V_{CC}	Meas. terminal	Test limits Min	Test limits Max	Test limits Unit
9	t_{PLH4}	3003	150	4.5 V	IN	GND	GND	4.5 V	GND		GND		OUT			4.5 V	4.5 V	GND	5.0 V	$\overline{P}$ 1 to $\overline{G}$	3	26	ns
T_C = 25°C	t_{PHL4}	Fig 4	151	"	IN	"	"	"	"		"		"			"	"	"	"	$\overline{P}$ 1 to $\overline{G}$	"	35	"
	t_{PLH4}	"	152	"	GND	"	"	"	"		"		"			"	"	IN	"	$\overline{P}$ 2 to $\overline{G}$	"	26	"
	t_{PHL4}	"	153	"	"	"	"	"	"		"		"			"	"	IN	"	$\overline{P}$ 2 to $\overline{G}$	"	35	"
	t_{PLH4}	"	154	"	"	"	"	"	IN		"		"			"	"	GND	"	$\overline{P}$ 3 to $\overline{G}$	"	26	"
	t_{PHL4}	"	155	"	"	"	"	"	IN		"		"			"	"	"	"	$\overline{P}$ 3 to $\overline{G}$	"	35	"
	t_{PLH5}	"	156	"	"	IN	"	"	GND		"		"			"	"	"	"	$\overline{G}$ 0 to $\overline{G}$	"	26	"
	t_{PHL5}	"	157	"	"	IN	"	"	"		"		"			"	"	"	"	$\overline{G}$ 0 to $\overline{G}$	"	35	"
	t_{PLH5}	"	158	IN	"	4.5 V	"	"	"		"		"			"	"	"	"	$\overline{G}$ 1 to $\overline{G}$	"	26	"
	t_{PHL5}	"	159	IN	"	"	"	"	"		"		"			"	"	"	"	$\overline{G}$ 1 to $\overline{G}$	"	35	"
	t_{PLH5}	"	160	4.5 V	"	"	"	"	"		"		"			"	IN	"	"	$\overline{G}$ 2 to $\overline{G}$	"	26	"
	t_{PHL5}	"	161	"	"	"	"	"	"		"		"			"	IN	"	"	$\overline{G}$ 2 to $\overline{G}$	"	35	"
	t_{PLH5}	"	162	"	"	"	"	IN	"		"		"			"	4.5 V	"	"	$\overline{G}$ 3 to $\overline{G}$	"	26	"
	t_{PHL5}	"	163	"	"	"	"	IN	"		"		"			"	"	"	"	$\overline{G}$ 3 to $\overline{G}$	"	35	"
	t_{PLH6}	"	164	"	"	"	IN	4.5 V	"	OUT	"					"	"	"	"	$\overline{P}$ 0 to $\overline{P}$	"	26	"
	t_{PHL6}	"	165	"	"	"	IN	"	"	"	"					"	"	"	"	$\overline{P}$ 0 to $\overline{P}$	"	35	"
	t_{PLH6}	"	166	"	IN	"	GND	"	"	"	"					"	"	"	"	$\overline{P}$ 1 to $\overline{P}$	"	26	"
	t_{PHL6}	"	167	"	IN	"	"	"	"	"	"					"	"	"	"	$\overline{P}$ 1 to $\overline{P}$	"	35	"
	t_{PLH6}	"	168	"	GND	"	"	"	"	"	"					"	"	IN	"	$\overline{P}$ 2 to $\overline{P}$	"	26	"
	t_{PHL6}	"	169	"	"	"	"	"	"	"	"					"	"	IN	"	$\overline{P}$ 2 to $\overline{P}$	"	35	"
	t_{PLH6}	"	170	"	"	"	"	"	IN	"	"					"	"	GND	"	$\overline{P}$ 3 to $\overline{P}$	"	26	"
	t_{PHL6}	"	171	"	"	"	"	"	IN	"	"					"	"	GND	"	$\overline{P}$ 3 to $\overline{P}$	"	35	"
11	Same tests, terminal conditions and limits as subgroup 10, except T_C = -55°C.																						

1/ Terminal conditions (Pins not designated may be H ≥ 2.0 V, or L ≤ 0.8 V, or open).
2/ Tests shall be performed in sequence.
3/ Input voltages shown are: A = 2.0 V minimum and B = 0.8 V maximum.
4/ Output voltages shall be either: (a) H = 2.4 V, minimum and L = 0.4 V, maximum when using a high speed checker double comparator; or (b) H ≥ 1.5 V and L < 1.5 V when using a high speed checker single comparator.

5. PACKAGING

5.1 Packaging requirements. For acquisition purposes, the packaging requirements shall be as specified in the contract or order (see 6.2). When packaging of materiel is to be performed by DoD or in-house contractor personnel, these personnel need to contact the responsible packaging activity to ascertain packaging requirements. Packaging requirements are maintained by the Inventory Control Point's packaging activity within the Military Service or Defense Agency, or within the military service's system command. Packaging data retrieval is available from the managing Military Department's or Defense Agency's automated packaging files, CD-ROM products, or by contacting the responsible packaging activity.

6. NOTES

(This section contains information of a general or explanatory nature that may be helpful, but it not mandatory)

6.1 Intended use. Microcircuits conforming to this specification are intended for original equipment design applications and logistic support of existing equipment.

6.2 Acquisition requirements. Acquisition documents should specify the following:

a. Title, number, and date of the specification.
b. PIN and compliance identifier, if applicable (see 1.2).
c. Requirements for delivery of one copy of the conformance inspection data pertinent to the device inspection lot to be supplied with each shipment by the device manufacturer, if applicable.
d. Requirement for certificate of compliance, if applicable.
e. Requirements for notification of change of product or process to acquiring activity in addition to notification to the qualifying activity, if applicable.
f. Requirements for failure analysis (including required test condition of method 5003), corrective action and reporting of results, if applicable.
g. Requirements for product assurance options.
h. Requirements for carriers, special lead lengths or lead forming, if applicable. These requirements shall not affect the part number. Unless otherwise specified, these requirements will not apply to direct purchase by or direct shipment to the Government.
i. Requirements for "JAN" marking.
j. Packaging requirements (see 5.1).

6.3 Qualification. With respect to products requiring qualification, awards will be made only for products which are, at the time of award of contract, qualified for inclusion in Qualified Manufacturers List QML-38535 whether or not such products have actually been so listed by that date. The attention of the contractors is called to these requirements, and manufacturers are urged to arrange to have the products that they propose to offer to the Federal Government tested for qualification in order that they may be eligible to be awarded contracts or purchase orders for the products covered by this specification. Information pertaining to qualification of products may be obtained from DSCC-VQ, 3990 E. Broad Street, Columbus, Ohio 43123-1199.

6.4 Superseding information. The requirements of MIL-M-38510 have been superseded to take advantage of the available Qualified Manufacturer Listing (QML) system provided by MIL-PRF-38535. Previous references to MIL-M-38510 in this document have been replaced by appropriate references to MIL-PRF-38535. All technical requirements now consist of this specification and MIL-PRF-38535. The MIL-M-38510 specification sheet number and PIN have been retained to avoid adversely impacting existing government logistics systems and contractor's parts lists.

6.5 Abbreviations, symbols and definitions. The abbreviations, symbols, and definitions used herein are defined in MIL-PRF-38535 and MIL-HDBK-1331, and as follows:

GND ..... Electrical ground (common terminal)
V_{IN} ..... Voltage level at an input terminal
V_{IC} ..... Input clamp voltage
I_{IN} ..... Current-flowing into an input terminal

6.6 Logistic support. Lead materials and finishes (see 3.3) are interchangeable. Unless otherwise specified, microcircuits acquired for Government logistic support will be acquired to device class B (see 1.2.2), lead material and finish A (see 3.4). Longer lead lengths and lead forming shall not affect the part number.

6.7 Substitutability. The cross-reference information below is presented for the convenience of users. Microcircuits covered by this specification will functionally replace the listed generic-industry type. Generic-industry microcircuit types may not have equivalent operational performance characteristics across military temperature ranges or reliability factors equivalent to MIL-M-35810 device types and may have slight physical variations in relation to case size. The presence of this information should not be deemed as permitting substitution of generic-industry types for MIL-M-38510 types or as a waiver of any of the provisions of MIL-PRF-38535.

Device type	Commercial type	Circuit	Company
01	54181	A	Texas Instruments, Inc.
01	7181	B	National Semiconductor, Corp.
01	54181	C	Motorola, Inc.
01	9341	D	Fairchild Semiconductor
01	54181	E	Advanced Micro Devices, Inc.
01	54181	F	Signetics Corp.
02	9342	A	Fairchild Semiconductor
02	54182	B	Texas Instruments, Inc.
02	54182	C	Motorola, Inc.
02	54182	D	Signetics Corp.

6.8 Changes from previous issue. Marginal notations are not used in this revision to identify changes with respect to the previous issue due to the extensiveness of the changes.

Custodians:
Army - CR
Navy - EC
Air Force - 11
DLA - CC

Preparing activity:
DLA - CC

(Project 5962-2099)

Review activities:
Army - MI, SM
Navy - AS, CG, MC, SH, TD
Air Force - 03, 19, 99

NOTE: The activities listed above were interested in this document as of the date of this document. Since organizations and responsibilities can change, you should verify the currency of the information above using the ASSIST Online database at http://assist.daps.dla.mil.