INCH-POUND
MIL-M-38510/106B
24 January 2005
SUPERSEDING
MIL-M-38510/106A
21 December 1977

MILITARY SPECIFICATION

MICROCIRCUITS, LINEAR, VOLTAGE FOLLOWER OPERATIONAL AMPLIFIERS, MONOLITHIC SILICON

Inactive for new design after 13 July 1995.

This specification is approved for use by all Departments and Agencies of the Department of Defense.

The requirements for acquiring the product herein shall consist of this specification sheet and MIL-PRF-38535.

1. SCOPE

1.1 Scope. This specification covers the detail requirements for monolithic silicon, voltage follower operational amplifier microcircuits. Two product assurance classes and a choice of case outlines and lead finishes are provided and are reflected in the complete part number. For this product, the requirements of MIL-M-38510 have been superseded by MIL-PRF-38535, (see 6.3)

1.2 Part or Identifying Number (PIN). The PIN is in accordance with MIL-PRF-38535, and as specified herein.

1.2.1 Device types. The device types are as follows:

Device type	Circuit
01	Voltage follower
02	Voltage follower, high speed
03	Voltage follower, high speed, dual 1/

1.2.2 Device class. The device class is the product assurance level as defined in MIL-PRF-38535.

1.2.3 Case outlines. The case outlines are as designated in MIL-STD-1835 and as follows:

Outline letter	Descriptive designator	Terminals	Package style
C	GDIP1-T14 or CDIP2-T14	14	Dual in line
E	GDIP1-T16 or CDIP2-T16	16	Dual in line
F	GDFP2-F16 or CDFP3-F16	16	Flat pack
G	MACY1-X8	8	Can
H	GDFP1-F10 or CDFP2-F10	10	Flat pack
P	GDIP1-T8 or CDIP2-T8	8	Dual in line

1/ Device type 03 may be monolithic, or may consist of two separate, independent dice.

Comments, suggestions, or questions on this document should be addressed to: Commander, Defense Supply Center Columbus, ATTN: DSCC-VAS, 3990 East Broad St., Columbus, OH 43218-3990, or email linear@dscc.dla.mil. Since contact information can change, you may want to verify the currency of this address information using the ASSIST Online database at http://assist.daps.dla.mil.

1.3 Absolute maximum ratings.

Supply voltage range ..... ±18 V dc
Input voltage range ..... ±15 V dc 2/
Storage temperature range ..... -65°C to +150°C
Output short circuit duration ..... Unlimited 3/
Lead temperature (soldering, 60 seconds) ..... +300°C
Junction temperature (T_J) ..... +175°C 4/

1.4 Recommended operating conditions.

Supply voltage range ..... ±5 V dc to ±18 V dc
Ambient temperature range (T_A) ..... -55°C to +125°C

1.5 Power and thermal characteristics.

Package	Case outline	Maximum allowable power dissipation	Maximum θ_{JC}	Maximum θ_{JA}
14 lead dual in line	C	400 mW at T_A = +125°C	See MIL-STD-1835	120°C/W
16 lead dual in line	E	400 mW at T_A = +125°C	See MIL-STD-1835	120°C/W
16 lead flat pack	F	400 mW at T_A = +125°C	See MIL-STD-1835	120°C/W
8 lead can	G	350 mW at T_A = +125°C	See MIL-STD-1835	150°C/W
10 lead flat pack	H	330 mW at T_A = +125°C	See MIL-STD-1835	150°C/W
8 lead dual in line	P	400 mW at T_A = +125°C	See MIL-STD-1835	120°C/W

2/ For supply voltages less than ±15 V dc, the absolute maximum input voltage is equal to the supply voltage.
3/ Short circuit may be to ground or either supply. Rating applied to +125°C case temperature or +75°C ambient temperature.
4/ For short term test (in the specific burn-in and life test configuration, when required and up to 168 hours maximum) T_J = 275°C.

2. APPLICABLE DOCUMENTS

2.1 General. The documents listed in this section are specified in sections 3, 4, or 5 of this specification. This section does not include documents cited in other sections of this specification or recommended for additional information or as examples. While every effort has been made to ensure the completeness of this list, document users are cautioned that they must meet all specified requirements of documents cited in sections 3, 4, or 5 of this specification, whether or not they are listed.

2.2 Government documents.

2.2.1 Specifications, standards, and handbooks. The following specifications and standards form a part of this specification to the extent specified herein. Unless otherwise specified, the issues of these documents are those cited in the solicitation or contract.

DEPARTMENT OF DEFENSE SPECIFICATIONS

MIL-PRF-38535 - Integrated Circuits (Microcircuits) Manufacturing, General Specification for.

DEPARTMENT OF DEFENSE STANDARDS

MIL-STD-883 - Test Method Standard for Microelectronics.
MIL-STD-1835 - Interface Standard Electronic Component Case Outlines.

(Copies of these documents are available online at http://assist.daps.dla.mil/quicksearch/ or http://assist.daps.dla.mil or from the Standardization Document Order Desk, 700 Robbins Avenue, Building 4D, Philadelphia, PA 19111-5094.)

2.3 Order of precedence. In the event of a conflict between the text of this specification and the references cited herein the text of this document takes precedence. Nothing in this document, however, supersedes applicable laws and regulations unless a specific exemption has been obtained.

3. REQUIREMENTS

3.1 Qualification. Microcircuits furnished under this specification shall be products that are manufactured by a manufacturer authorized by the qualifying activity for listing on the applicable qualified manufacturers list before contract award (see 4.3 and 6.4).

3.2 Item requirements. The individual item requirements shall be in accordance with MIL-PRF-38535 and as specified herein or as modified in the device manufacturer's Quality Management (QM) plan. The modification in the QM plan shall not affect the form, fit, or function as described herein.

3.3 Design, construction, and physical dimensions. The design, construction, and physical dimensions shall be as specified in MIL-PRF-38535 and herein.

3.3.1 Terminal connections. The terminal connections shall be as specified on figure 2.

3.3.2 Schematic circuits. The schematic circuits shall be maintained by the manufacturer and made available to the qualifying activity and the preparing activity upon request.

3.3.3 Case outlines. The case outlines shall be as specified in 1.2.3.

3.4 Lead material and finish. The lead material and finish shall be in accordance with MIL-PRF-38535 (see 6.6).

3.5 Electrical performance characteristics. The electrical performance characteristics are as specified in table I, and apply over the full recommended ambient operating temperature range of –55°C to +125°C and for supply voltages of ±5 V dc to ±18 V dc, unless otherwise specified (see table I).

3.5.1 Offset null circuits. Each amplifier shall be capable of being nulled for ±7.5 mV input offset voltage using the following circuit in figure 1.

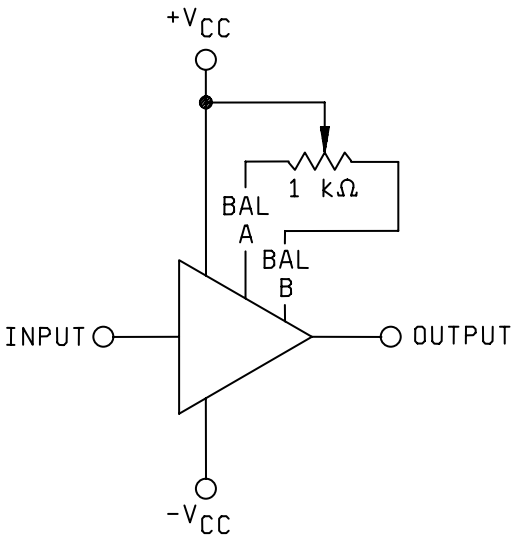

FIGURE 1. Offset null circuit.

3.6 Electrical test requirements. Electrical test requirements for each device class shall be the subgroups specified in table II. The electrical tests for each subgroup are described in table III.

3.7 Marking. Marking shall be in accordance with MIL-PRF-38535.

3.8 Microcircuit group assignment. The devices covered by this specification shall be in microcircuit group number 49 (see MIL-PRF-38535, appendix A).

TABLE I. Electrical performance characteristics.

Test	Symbol	Conditions 1/	Device type	Limits 2/ Min	Limits 2/ Max	Units
Input offset voltage	$V_{IO(1)}$ and $V_{IO(2)}$	T_A = 25°C	01	-4.0	+4.0	mV
			02,03	-2.5	+2.5	
		-55°C ≤ T_A ≤ +125°C	01	-5.0	+5.0	
			02,03	-3.5	+3.5	
Input offset voltage temperature sensitivity	ΔV_{IO} / ΔT	-55°C ≤ T_A ≤ +25°C	01,02,03		15	µV/°C
		+25°C ≤ T_A ≤ +125°C			15	
Adjustment for input offset voltage	$V_{IO(ADJ)}$	$+V_{IO(ADJ)}$	01,02,03	+7.5		mV
		$-V_{IO(ADJ)}$			-7.5	
Input bias current	I_{IB}	T_A = 25°C	01		5	nA
			02,03		3	
		-55°C ≤ T_A ≤ +125°C	01		20	
			02,03		10	
Power supply rejection	+PSR	ΔV_{CC} = 8 V dc	01		-60	dB
			02,03		-70	
	-PSR	ΔV_{CC} = 8 V dc	01,02,03		-70	
Supply current	$+I_{CC}$	T_A = -55°C	01,02,03		8.0	mA
		T_A = +25°C			5.5	
		T_A = +125°C			4.0	
Output resistance	R_O	+25°C ≤ T_A ≤ +125°C	01,02,03		2.5	Ω
		-55°C ≤ T_A ≤ +25°C			5	
Maximum output voltage swing	V_{OPP1}	R_L = 10 kΩ, Booster open ±V_O = ±10 V	01,02,03	20		V
	V_{OPP2}	R_L = 3.3 kΩ, 100 Ω from booster to $-V_{CC}$; ±V_O = ±10 V		20		
Transient response	TR	Figure 5, rise time	01,02,03		44	ns
		Figure 5, overshoot, T_A = +25°C			40	%
		Figure 5, overshoot, T_A = -55°C and +125°C			50	

See footnotes at end of table.

TABLE I. Electrical performance characteristics – Continued.

Test	Symbol	Conditions 1/	Device type	Limits 2/		Units
				Min	Max	
Slew rate	SR(±)	Figure 5	01	7		V/µs
			02,03	20		
Large signal voltage gain	$A_V(\pm)$	Figure 4	01,02,03	0.999	1.000	
Output short circuit current (positive output)	$I_{OS}(+)$	$+25°C \leq T_A \leq +125°C$	01,02,03	10	35	mA
		$T_A = -55°C$		10	40	
Output short circuit current (negative output)	$I_{OS}(-)$	$+25°C \leq T_A \leq +125°C$	01,02,03	1.0	10	mA
		$T_A = -55°C$		1.0	10	
Bandwidth	BW	Figure 5	01,02,03	8		MHz
Channel separation	CS	Figure 6	03	90		dB

1/ Complete terminal conditions shall be as specified on figure 3, unless otherwise specified.

2/ Limits apply to both halves of device type 03, independently.

TABLE II. Electrical test requirements.

MIL-PRF-38535 test requirements	Subgroups (see table III)	
	Class S devices	Class B devices
Interim electrical parameters	1	1
Final electrical test parameters	1*, 2, 3, 4, 5, 6	1*, 2, 3, 4, 5, 6
Group A test requirements	1, 2, 3, 4, 5, 6, 7, 8	1, 2, 3, 4, 5, 6, 7
Group B electrical test parameters when using the method 5005 QCI option	1, 2, 3, and table IV delta limits	N/A
Group C end-point electrical parameters	1, 2, 3, and table IV delta limits	1 and table IV delta limits
Additional electrical subgroup for group C Periodic inspections	N/A	8
Group D end-point electrical parameters	1, 2, 3, and table IV delta limits	1 and table IV delta limits

*PDA applies to subgroup 1.

4. VERIFICATION.

4.1 Sampling and inspection. Sampling and inspection procedures shall be in accordance with MIL-PRF-38535 or as modified in the device manufacturer's Quality Management (QM) plan. The modification in the QM plan shall not effect the form, fit, or function as described herein.

4.2 Screening. Screening shall be in accordance with MIL-PRF-38535, and shall be conducted on all devices prior to qualification and quality conformance inspection. The following additional criteria shall apply:

a. The burn-in test duration, test condition, and test temperature, or approved alternatives shall be as specified in the device manufacturer's QM plan in accordance with MIL-PRF-38535. The burn-in test circuit shall be maintained under document control by the device manufacturer's Technology Review Board (TRB) in accordance with MIL-PRF-38535 and shall be made available to the acquiring or preparing activity upon request. The test circuit shall specify the inputs, outputs, biases, and power dissipation, as applicable, in accordance with the intent specified in test method 1015 of MIL-STD-883.

b. Interim and final electrical test parameters shall be as specified in table II, except interim electrical parameters test prior to burn-in is optional at the discretion of the manufacturer.

c. Additional screening for space level product shall be as specified in MIL-PRF-38535.

4.3 Qualification inspection. Qualification inspection shall be in accordance with MIL-PRF-38535.

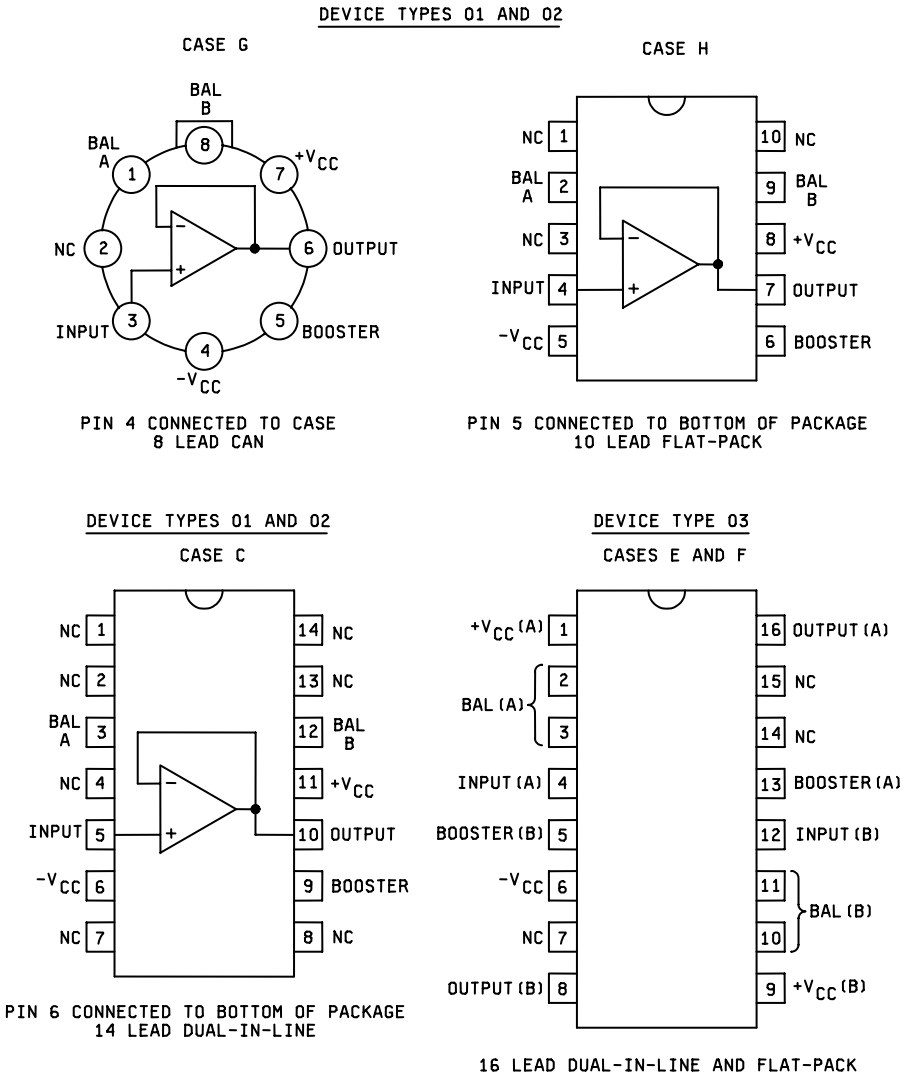

FIGURE 2. Terminal connections.

DEVICE TYPES 01 AND 02

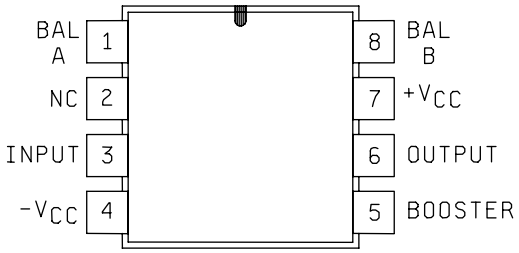

DUAL-IN-LINE PACKAGE
CASE P

NOTES:

1. $+V_{CC}$(A) and $+V_{CC}$(B) shall not be internally connected, however, external connection is recommended.
2. Pin 6 common to both halves and is connected to the case.

FIGURE 2. Terminal connections – Continued.

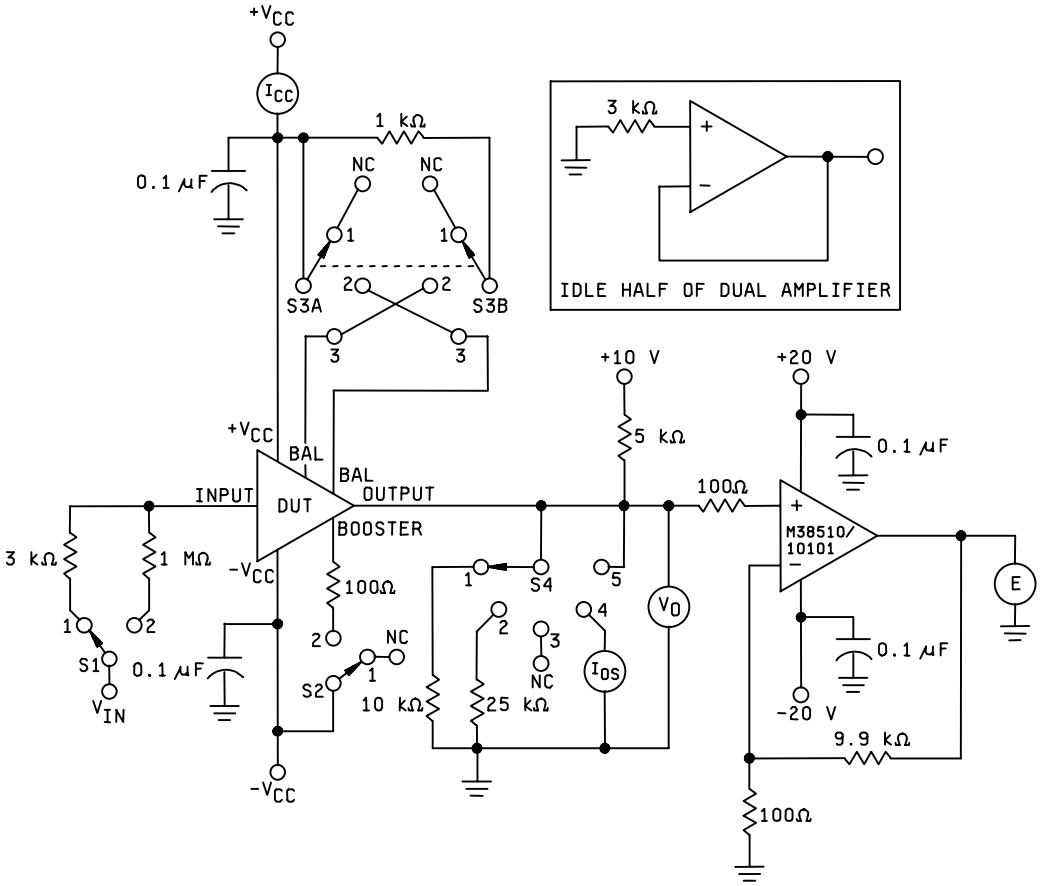

NOTE: All resistors are 0.1 percent tolerance; all capacitors are 10 percent tolerance.

FIGURE 3. Test circuit for static and dynamic tests.

Parameter	Supplies 1/ 2/			Switch positions 1/				Measure		Measured parameter	Units
	$+V_{CC}$	$-V_{CC}$	V_{IN}	S1	S2	S3	S4	Value	Units	Equation	
$V_{IO(1)}$ 3/	+18 V	-18 V	---	1	1	1	1	E1	mV	V_{IO} = E1 / 100	mV
VIO(2)	+5 V	-5 V	---	1	1	1	1	E2	mV	V_{IO} = E2 / 100	mV
V_{IO}(ADJ)+	+18 V	-18 V	---	1	1	2	1	E3	mV	V_{IO}(ADJ)+ = (E1-E3) / 100	mV
V_{IO}(ADJ)-	+18 V	-18 V	---	1	1	3	1	E4	mV	V_{IO}(ADJ)- = (E1-E4) / 100	mV
$I_{IB(+)}$	+18 V	-18 V	---	2	1	1	1	E5	mV	I_{IB} = (E1-E5) / 100	
R_O	+18 V	-18 V	---	1	1	1	5	E6	mV	R_O = (E6-E1) / 200	
+PSR 3/	+10 V	-18 V	---	1	1	1	1	E7	mV	+PSR = 20 $\log_{10}$ (E1-E2) / $8x10^5$	dB
-PSR 3/	+18 V	-10 V	---	1	1	1	1	E8	mV	-PSR = 20 $\log_{10}$ (E1-E8) / $8x10^5$	dB
$+I_{CC}$	+18 V	-18 V	---	1	1	1	3	I_{CC}	mA	$+I_{CC} = I_{CC}$	mA
$+V_{OPP1}$	+18 V	-18 V	4/	1	1	1	1	$(V_O)_1$	V	V_{OPP1} = $(V_O)_1 – (V_O)_2$	V
$-V_{OPP1}$	+18 V	-18 V	4/	1	1	1	1	$(V_O)_2$	V		
$+V_{OPP2}$	+18 V	-18 V	4/	1	2	1	2	$(V_O)_3$	V	V_{OPP2} = $(V_O)_3 – (V_O)_4$	V
$-V_{OPP2}$	+18 V	-18 V	4/	1	2	1	2	$(V_O)_4$	V		
$I_{OS(+)}$	+18 V	-18 V	+15 V	1	1	1	4	I_{OS1}	mA	$I_{OS(+)} = I_{OS1}$ 5 sec test duration	mA
$I_{OS(-)}$	+18 V	-18 V	-15 V	1	1	1	4	I_{OS2}	mA	$I_{OS(-)} = I_{OS2}$ 5 sec test duration	mA

1/ Precautions shall be taken to prevent damage to the device under test (DUT) during insertion into socket and change of switch positions (for example. disable voltage supplies, current limit $\pm V_{CC}$, etc.).
2/ All supply voltages must be held to within 0.1 V of the specified value.
3/ E1, E7, and E8 shall be measured to four place accuracy to provide required resolution on PSR.
4/ V_{IN} shall be increased to steps of 0.10 volt, starting at ±9.00 volts as applicable, until the increase in the output is less than 0.08 volt per 0.10 volt increase in the input. The last value of V_O shall be used to calculate V_{OPP}.

FIGURE 3. Test circuit for static and dynamic tests – Continued.

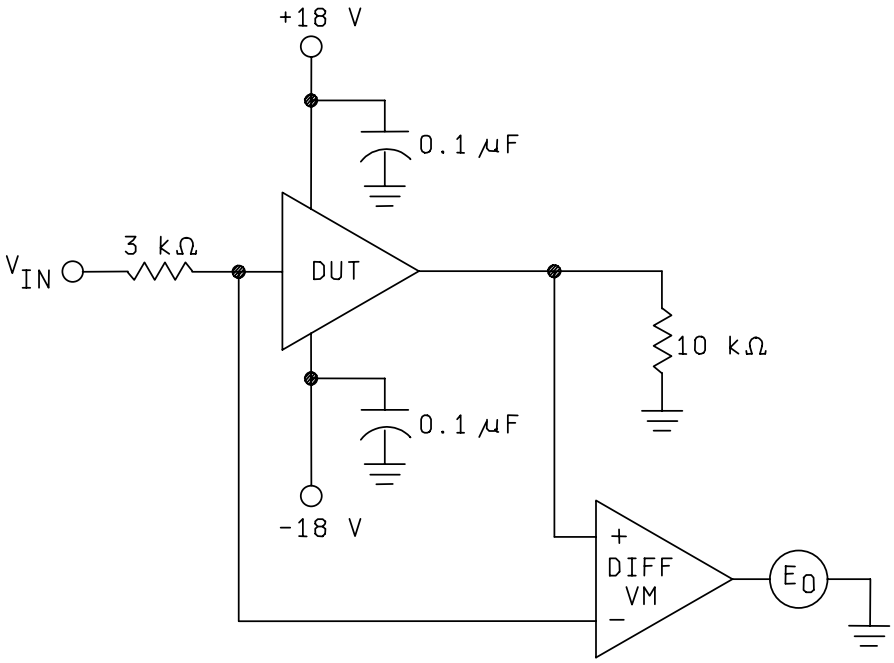

NOTES:

1. The differential voltmeter shall have a common mode rejection equal to or greater than 100 dB and a maximum common mode input range equal to or greater than ±15 V.
2. To calculate voltage gain, use the following procedure:

Step	V_{IN}	Measure	Equation
1	0 V	E_{01}	
2	+10 V	E_{02}	$A_{V+} = 1 – (E_{01} – E_{02}) / 10$
3	-10 V	E_{03}	$A_{V-} = 1 – (E_{03} – E_{02}) / 10$

3. Test duration is 10 ms.

FIGURE 4. Test circuit for measuring large signal voltage gain.

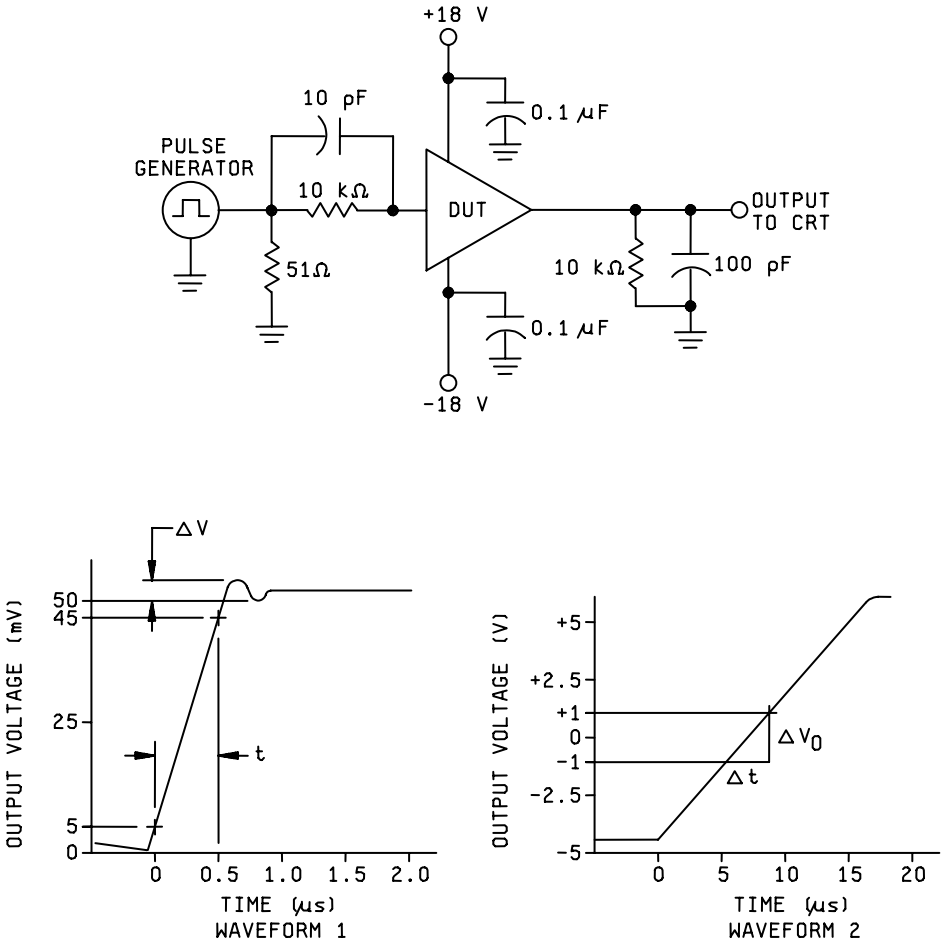

FIGURE 5. Transient response test circuit.

Parameter	Pulse generator	Measure	Equation	Units
TR; Rise time	10 ns rise time maximum,	t (μs) (see waveform 1)	Rise time = t	μs
TR; Overshoot	+50 mV amplitude	ΔV (mV) (see waveform 1)	Overshoot = 2 (ΔV)	%
SR(+) Slew rate	10 ns rise time maximum, -5 V to +5 V step	ΔV_O (Volts), Δt (μs) (see waveform 2)	SR(+) = ΔV_O / Δt	V / μs
SR(-) Slew rate	100 ns rise time maximum, +5 V to -5 V step	ΔV_O (Volts), Δt (μs)	SR(-) = ΔV_O / Δt	V / μs
BW (small signal)		Calculate	BW = 0.35 / Rise time (μs)	MHz

NOTE: Resistor tolerances are 1 percent; capacitor tolerances are 10 percent.

FIGURE 5. Transient response test circuit – Continued.

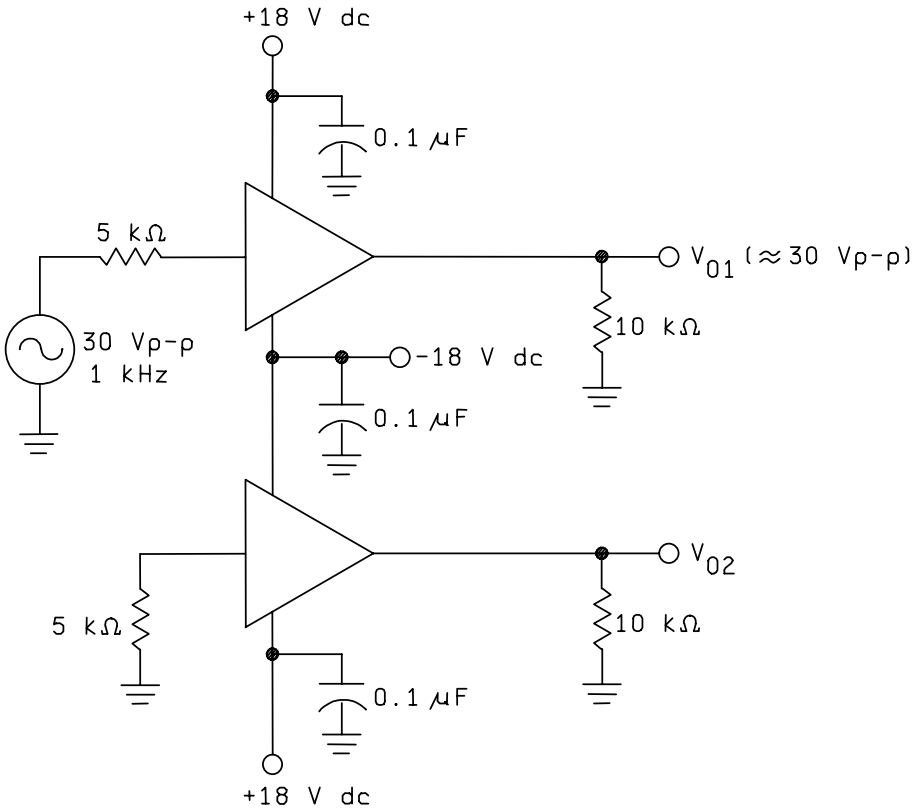

NOTES:

1. Channel separation = 20 log V_{O1} / (V_{O2}) (dB).
2. V_{O2} measured is A.C.

FIGURE 6. Test circuit for channel separation (device type 03 only).

TABLE III. Group A inspection.

Subgroup	Symbol	MIL-STD-883 method	Test	Condition 1/	Device type	Limits 2/ Min	Limits 2/ Max	Unit
1 T_A = +25°C	$V_{IO(1)}$	4001	1	R_S = 3 kΩ, ±V_{CC} = ±18 V	01	-4.0	+4.0	mV
					02,03	-2.5	+2.5	
	$V_{IO(2)}$	4001	2	R_S = 3 kΩ, ±V_{CC} = ±5 V	01	-4.0	+4.0	mV
					02,03	-2.5	+2.5	
	$V_{IO(ADJ)+}$		3	R_S = 3 kΩ, ±V_{CC} = ±18 V	01,02,03	+7.5		mV
	$V_{IO(ADJ)-}$		4	R_S = 3 kΩ, ±V_{CC} = ±18 V	01,02,03		-7.5	mV
	I_{IB}	4001	5	±V_{CC} = ±18 V	01		5	nA
					02,03		3	
	+PSR	4003	6	Δ(+V_{CC}) = 8 V dc	01		-60	dB
					02,03		-70	
	-PSR	4003	7	Δ(-V_{CC}) = 8 V dc	01,02,03		-70	dB
	+I_{CC}	3005	8	±V_{CC} = ±18 V	01,02,03		5.5	mA
	R_O		9	±V_{CC} = ±18 V	01,02,03		2.5	Ω
	$I_{OS(+)}$	3011	10	V_{IN} = +15 V, ±V_{CC} = ±18 V	01,02,03	10	35	mA
	$I_{OS(-)}$	3011	11	V_{IN} = -15 V, ±V_{CC} = ±18 V	01,02,03	1.0	10	mA
2 T_A = +125°C	$V_{IO(1)}$	4001	12	R_S = 3 kΩ, ±V_{CC} = ±18 V	01	-5.0	+5.0	mV
					02,03	-3.5	+3.5	
	$V_{IO(2)}$	4001	13	R_S = 3 kΩ, ±V_{CC} = ±5 V	01	-5.0	+5.0	mV
					02,03	-3.5	+3.5	
	ΔV_{IO} / ΔT	4001	14	[$V_{IO(1)}$ (test 12) – $V_{IO(1)}$ (test 1)] / 100°C	01,02,03		15	μV/°C
	$V_{IO(ADJ)+}$		15	R_S = 3 kΩ, ±V_{CC} = ±18 V	01,02,03	+7.5		mV
	$V_{IO(ADJ)-}$		16	R_S = 3 kΩ, ±V_{CC} = ±18 V	01,02,03		-7.5	mV
	I_{IB}	4001	17	±V_{CC} = ±18 V	01		20	nA
					02,03		10	
	+PSR	4003	18	Δ(+V_{CC}) = 8 V dc	01		-60	dB
					02,03		-70	
	-PSR	4003	19	Δ(-V_{CC}) = 8 V dc	01,02,03		-70	dB
	+I_{CC}	3005	20	±V_{CC} = ±18 V	01,02,03		4.0	mA

See footnotes at end of table.

TABLE III. Group A inspection – Continued.

Subgroup	Symbol	MIL-STD-883 method	Test	Condition 1/	Device type	Limits 2/ Min	Limits 2/ Max	Unit
2	R_O		21	$\pm V_{CC} = \pm 18$ V	01,02,03		2.5	Ω
T_A =	$I_{OS(+)}$	3011	22	$V_{IN} = +15$ V, $\pm V_{CC} = \pm 18$ V	01,02,03	10	35	mA
+125°C	$I_{OS(-)}$	3011	23	$V_{IN} = -15$ V, $\pm V_{CC} = \pm 18$ V	01,02,03	1.0	10	mA
3	$V_{IO(1)}$	4001	24	$R_S = 3$ kΩ, $\pm V_{CC} = \pm 18$ V	01	-5.0	+5.0	mV
T_A =					02,03	-3.5	+3.5	
-55°C	$V_{IO(2)}$	4001	25	$R_S = 3$ kΩ, $\pm V_{CC} = \pm 5$ V	01	-5.0	+5.0	mV
					02,03	-3.5	+3.5	
	$\Delta V_{IO} / \Delta T$	4001	26	[$V_{IO(1)}$ (test 1) – $V_{IO(1)}$ (test 24)] / 80°C	01,02,03		15	μV/°C
	$V_{IO(ADJ)+}$		27	$R_S = 3$ kΩ, $\pm V_{CC} = \pm 18$ V	01,02,03	+7.5		mV
	$V_{IO(ADJ)-}$		28	$R_S = 3$ kΩ, $\pm V_{CC} = \pm 18$ V	01,02,03		-7.5	mV
	I_{IB}	4001	29	$\pm V_{CC} = \pm 18$ V	01		20	nA
					02,03		10	
	+PSR	4003	30	$\Delta(+V_{CC})$ = 8 V dc	01		-60	dB
					02,03		-70	
	-PSR	4003	31	$\Delta(-V_{CC})$ = 8 V dc	01,02,03		-70	dB
	$+I_{CC}$	3005	32	$\pm V_{CC} = \pm 18$ V	01,02,03		8.0	mA
	R_O		33	$\pm V_{CC} = \pm 18$ V	01,02,03		5	Ω
	$I_{OS(+)}$	3011	34	$V_{IN} = +15$ V, $\pm V_{CC} = \pm 18$ V	01,02,03	10	40	mA
	$I_{OS(-)}$	3011	35	$V_{IN} = -15$ V, $\pm V_{CC} = \pm 18$ V	01,02,03	1.0	10	mA
4	A_{V+}	4004	36	Figure 4, $\pm V_{CC} = \pm 18$ V	01,02,03	0.999	1.000	---
T_A =	A_{V-}	4004	37	Figure 4, $\pm V_{CC} = \pm 18$ V	01,02,03	0.999	1.000	---
+25°C	V_{OPP1}	4004	38	$R_L = 10$ kΩ, booster open, $\pm V_O = \pm 10$ V	01,02,03	20		V
	V_{OPP2}	4004	39	$R_L = 3.3$ kΩ, $\pm V_O = \pm 10$ V, 100 Ω from booster to $-V_{CC}$	01,02,03	20		V
5	A_{V+}	4004	40	Figure 4, $\pm V_{CC} = \pm 18$ V	01,02,03	0.999	1.000	---
T_A =	A_{V-}	4004	41	Figure 4, $\pm V_{CC} = \pm 18$ V	01,02,03	0.999	1.000	---
+125°C	V_{OPP1}	4004	42	$R_L = 10$ kΩ, booster open, $\pm V_O = \pm 10$ V	01,02,03	20		V
	V_{OPP2}	4004	43	$R_L = 3.3$ kΩ, $\pm V_O = \pm 10$ V, 100 Ω from booster to $-V_{CC}$	01,02,03	20		V

See footnotes at end of table.

TABLE III. Group A inspection – Continued.

Subgroup	Symbol	MIL-STD-883 method	Test	Condition 1/	Device type	Limits 2/ Min	Limits 2/ Max	Unit
6	A_{V+}	4004	44	Figure 4, $\pm V_{CC} = \pm 18$ V	01,02,03	0.999	1.000	V/V
T_A =	A_{V-}	4004	45	Figure 4, $\pm V_{CC} = \pm 18$ V	01,02,03	0.999	1.000	V/V
-55°C	V_{OPP1}	4004	46	R_L = 10 kΩ, booster open, $\pm V_O = \pm 10$ V	01,02,03	20		V
	V_{OPP2}	4004	47	R_L = 3.3 kΩ, $\pm V_O = \pm 10$ V, 100 Ω from booster to $-V_{CC}$	01,02,03	20		V
7	TR rise time		48	Figure 5	01,02,03		44	ns
T_A =	TR overshoot		49	Figure 5	01,02,03		40	%
+25°C	SR(+)	4002	50	Figure 5	01	7		V/µs
					02,03	20		
	SR(-)	4002	51	Figure 5	01	7		V/µs
					02,03	20		
	BW		52	Figure 5	01,02,03	8		MHz
	CS		53	Figure 6	03	90		dB
8	TR rise time		54	Figure 5	01,02,03		44	ns
T_A =	TR overshoot		55	Figure 5	01,02,03		50	%
+125°C	SR(+)	4002	56	Figure 5	01	7		V/µs
					02,03	20		
	SR(-)	4002	57	Figure 5	01	7		V/µs
					02,03	20		
	BW		58	Figure 5	01,02,03	8		MHz
	CS		59	Figure 6	03	90		dB
8	TR rise time		60	Figure 5	01,02,03		44	ns
T_A =	TR overshoot		61	Figure 5	01,02,03		50	%
-55°C	SR(+)	4002	62	Figure 5	01	7		V/µs
					02,03	20		
	SR(-)	4002	63	Figure 5	01	7		V/µs
					02,03	20		
	BW		64	Figure 5	01,02,03	8		MHz
	CS		65	Figure 6	03	90		dB

1/ Complete terminal conditions shall be as specified on figure 3, unless otherwise specified.

2/ Limits apply to both halves of device type 03, independently.

4.4 Technology Conformance inspection (TCI). Technology conformance inspection shall be in accordance with MIL-PRF-38535 and herein for groups A, B, C, and D inspections (see 4.4.1 through 4.4.4).

4.4.1 Group A inspection. Group A inspection shall be in accordance with table III of MIL-PRF-38535 and as follows:

a. Tests shall be as specified in table II herein.

b. Subgroup 9, 10, and 11 of table I of method 5005 of MIL-STD-883 shall be omitted.

4.4.2 Group B inspection. Group B inspection shall be in accordance with table II of MIL-PRF-38535.

a. End point electrical parameters shall be as specified in table II.

4.4.3 Group C inspection. Group C inspection shall be in accordance with table IV of MIL-PRF-38535 and as follows:

a. End point electrical parameters shall be as specified in table II herein.

b. The steady-state life test duration, test condition, and test temperature, or approved alternatives shall be as specified in the device manufacturer's QM plan in accordance with MIL-PRF-38535. The burn-in test circuit shall be maintained under document control by the device manufacturer's Technology Review Board (TRB) in accordance with MIL-PRF-38535 and shall be made available to the acquiring or preparing activity upon request. The test circuit shall specify the inputs, outputs, biases, and power dissipation, as applicable, in accordance with the intent specified in test method 1005 of MIL-STD-883.

4.4.4 Group D inspection. Group D inspection shall be in accordance with table V of MIL-PRF-38535. End point electrical parameters shall be as specified in table II herein.

4.5 Methods of inspection. Methods of inspection shall be specified and as follows.

4.5.1 Voltage and current. All voltage values given, except the input offset voltage (or differential voltage) are referenced to the external zero reference level of the supply voltage. Currents given for conventional current and are positive when flowing into the referenced terminal.

5. PACKAGING

5.1 Packaging requirements. For acquisition purposes, the packaging requirements shall be as specified in the contract or order (see 6.2). When actual packaging of materiel is to be performed by DoD personnel, these personnel need to contact the responsible packaging activity to ascertain requisite packaging requirements. Packaging requirements are maintained by the Inventory Control Point's packaging activity within the Military Department of Defense Agency, or within the Military Department's System Command. Packaging data retrieval is available from the managing Military Department's or Defense Agency's automated packaging files, CD-ROM products, or by contacting the responsible packaging activity.

TABLE IV. Group C and D end-point electrical parameters. T_A = +25°C, $\pm V_{CC}$ = ±18 V

Test	Device type 01		Device types 02 and 03	
	Limit	Delta	Limit	Delta
V_{IO}	±4 mV	±1 mV	±2.5 mV	±0.5 mV
I_{IB}	5 nA	±1 nA	3 nA	±1 nA
I_{CC}	5.5 mA	±10 %	5.5 mA	±10 %

6. NOTES

6.1 Intended use. Microcircuits conforming to this specification are intended for original equipment design applications and logistic support of existing equipment.

6.2 Acquisition requirements. Acquisition documents should specify the following:

a. Title, number, and date of the specification.

b. Pin and compliance identifier, if applicable (see 1.2).

c. Requirements for delivery of one copy of the conformance inspection data pertinent to the device inspection lot to be supplied with each shipment by the device manufacturer, if applicable.

d. Requirements for certificate of compliance, if applicable.

e. Requirements for notification of change of product or process to acquiring activity in addition to notification of the qualifying activity, if applicable.

f. Requirements for failure analysis (including required test condition of MIL-STD-883, method 5003), corrective action and reporting of results, if applicable.

g. Requirements for product assurance options.

h. Requirements for special carriers, lead lengths, or lead forming, if applicable. These requirements should not affect the part number. Unless otherwise specified, these requirements will not apply to direct purchase by or direct shipment to the Government.

i. Requirements for "JAN" marking.

j. Packaging requirements (see 5.1).

6.3 Superseding information. The requirements of MIL-M-38510 have been superseded to take advantage of the available Qualified Manufacturer Listing (QML) system provided by MIL-PRF-38535. Previous references to MIL-M-38510 in this document have been replaced by appropriate references to MIL-PRF-38535. All technical requirements now consist of this specification and MIL-PRF-38535. The MIL-M-38510 specification sheet number and PIN have been retained to avoid adversely impacting existing government logistics systems and contractor's parts lists.

6.4 Qualification. With respect to products requiring qualification, awards will be made only for products which are, at the time of award of contract, qualified for inclusion in Qualified Manufacturers List QML-38535 whether or not such products have actually been so listed by that date. The attention of the contractors is called to these requirements, and manufacturers are urged to arrange to have the products that they propose to offer to the Federal Government tested for qualification in order that they may be eligible to be awarded contracts or purchase orders for the products covered by this specification. Information pertaining to qualification of products may be obtained from DSCC-VQ, 3990 E. Broad Street, Columbus, Ohio 43128-3990.

6.5 Abbreviations, symbols, and definitions. The abbreviations, symbols, and definitions used herein are defined in MIL-PRF-38535, and MIL-STD-1331.

6.6 Logistic support. Lead materials and finishes (see 3.3) are interchangeable. Unless otherwise specified, microcircuits acquired for Government logistic support will be acquired to device class B (see 1.2.2), lead material and finish A (see 3.4). Longer length leads and lead forming should not affect the part number.

6.7 Substitutability. The cross-reference information below is presented for the convenience of users. Microcircuits covered by this specification will functionally replace the listed generic-industry type. Generic-industry microcircuit types may not have equivalent operational performance characteristics across military temperature ranges or reliability factors equivalent to MIL-M-38510 device types and may have slight physical variations in relation to case size. The presence of this information should not be deemed as permitting substitution of generic-industry types for MIL-M-38510 types or as a waiver of any of the provisions of MIL-PRF-38535.

Military device type	Generic-industry type
01	LM102
02	LM110
03	LH2110

6.8 Changes from previous issue. Marginal notations are not used in this revision to identify changes with respect to the previous issue, due to the extensiveness of the changes.

Custodians:
Army – CR
Navy - EC
Air Force - 11
DLA – CC

Review activities:
Army - MI, SM
Navy - AS, CG, SH, TD
Air Force – 03, 19, 99

Preparing activity:
DLA - CC

Project 5962-2082

NOTE: The activities listed above were interested in this document as of this date of this document. Since organizations and responsibilities can change, you should verify the currency of the information above using the ASSIT Online database at http://assist.daps.dla.mil.