METRIC

MIL-M-24350B(SH)
31 July 1989
SUPERSEDING
MIL-M-24350A(SH)
27 September 1982
MIL-R-24563B(SH)
15 November 1977
(See 6.9)

MILITARY SPECIFICATION

# MONITORS, REVERSE POWER AND POWER-SENSING, ELECTRICAL POWER (NAVAL SHIPBOARD USE) (METRIC)

This specification is approved for use by the Naval Sea Systems Command, Department of the Navy, and is available for use by all Departments and Agencies of the Department of Defense.

## 1 SCOPE

1.1 Scope. This specification covers the general requirements for reverse power monitors and power-sensing monitors for protection of electrical power generation equipment (see 6.1).

1.2 Classification. The type designation of reverse power and power-sensing monitors shall be in the following form (see 6.2):

RP 60 — Example of part or identifying number (PIN): RP60

60 — The nominal frequency designated in hertz (Hz)

RP — Reverse power monitors covered by this specification are designated by the two letter symbol "RP", and power-sensing monitors by the two letter symbol "PS".

Beneficial comments (recommendations, additions, deletions) and any pertinent data which may be of use in improving this document should be addressed to Commander, Naval Sea Systems Command, SEA 55Z3, Department of the Navy, Washington, DC 20362-5101 by using the self-addressed Standardization Document Improvement Proposal (DD Form 1426) appearing at the end of this document or by letter.

AMSC N/A FSC 5925
DISTRIBUTION STATEMENT A. Approved for public release; distribution is unlimited

## 2 APPLICABLE DOCUMENTS

### 2.1 Government documents.

2.1.1 Specifications and standards. The following specifications and standards form a part of this document to the extent specified herein. Unless otherwise specified, the issues of these documents are those listed in the issue of the Department of Defense Index of Specifications and Standards (DoDISS) and supplement thereto, cited in the solicitation (see 6.2).

SPECIFICATIONS

FEDERAL

| | |
|---|---|
| PPP-F-320 | - Fiberboard. Corrugated and Solid, Sheet Stock (Container Grade) and Cut Shapes. |

MILITARY

| | |
|---|---|
| MIL-S-901 | - Shock Tests, H.I. (High-Impact), Shipboard Machinery, Equipment and Systems, Requirements for |
| MIL-E-917 | - Electric Power Equipment, Basic Requirements (Naval Shipboard Use). |
| MIL-P-15024 | - Plates, Tags and Bands for Identification of Equipment |
| MIL-P-15024/5 | - Plates, Identification. |
| MIL-S-16036 | - Switchgear, Power, Naval Shipboard. |
| MIL-S-19500 | - Semiconductor Devices, General Specification for |
| MIL-M-38510 | - Microcircuits, General Specification for |
| MIL-E-17555 | - Electronic and Electrical Equipment, Accessories, and Provisioned Items (Repair Parts): Packaging of. |
| MIL-L-19140 | - Lumber and Plywood, Fire-Retardant Treated |

STANDARDS

MILITARY

| | |
|---|---|
| MIL-STD-167-1 | - Mechanical Vibrations of Shipboard Equipment (Type I- Environmental and Type II-Internally Excited) |
| MIL-STD-202 | - Test Methods for Electronic and Electrical Component Parts |
| MIL-STD-461 | - Electromagnetic Emission and Susceptibility Requirements for the Control of Electromagnetic Interference. |
| MIL-STD-471 | - Maintainability/Verification/Demonstration/Evaluation |
| MIL-STD-701 | - Lists of Standard Semiconductor Devices. |
| MIL-STD-740 | - Airborne and Structureborne Noise Measurements and Acceptance Criteria of Shipboard Equipment |
| MIL-STD-781 | - Reliability Testing for Engineering Development, Qualification, and Production |
| MIL-STD-1399, Section 300 | - Interface Standard for Shipboard Systems-Electric Power, Alternating Current (Metric) |
| MIL-STD-1562 | - Lists of Standard Microcircuits |

(Unless otherwise indicated, copies of federal and military specifications and standards are available from the Naval Publications and Forms Center, (ATTN NPODS), 5801 Tabor Avenue, Philadelphia, PA 19120-5099 )

2 2 Order of precedence. In the event of a conflict between the text of this document and the references cited herein, the text of this document takes precedence. Nothing in this document, however, supersedes applicable laws and regulations unless a specific exemption has been obtained.

3. REQUIREMENTS

3.1 Qualification. The monitors furnished under this specification shall be products which are qualified for listing on the applicable qualified products list at time set for opening of bids (see 4.4 and 6 6)

3 2 General requirements. The monitors shall be in accordance with the requirements of MIL-E-917, and the requirements of this specification except as otherwise specified in the contract or order.

3.2 1 Painting. Parts not fabricated of a corrosion-resisting material or having a corrosion-resistant treatment as specified in MIL-E-917 except for semi-conductors, shall be painted as specified in MIL-E-917. Only one coat of gray enamel shall be applied on the outside of the enclosure. Touching-up will be permitted for marks or scratches due to factory handling Cadmium plating specified in MIL-E-917 shall not be used.

3.3 Performance.

3.3.1 Alternating current (ac) monitors The ac monitor, when connected similarly to that shown on figure 1 to a 3-phase ac generator with any leading or lagging power factor (pf) condition, shall perform the functions specified herein. The power characteristics are as specified in MIL-STD-1399, section 300 Each monitor shall receive a 3-phase, 115 volt supply from the generator side of the generator circuit breaker via open delta connected potential transformers. The monitor current sensing supply shall be obtained from two current transformers with a rated 5 ampere secondary current One current transformer is located in phase A, and the other in phase C The monitor shall not be damaged by voltages from 0 through 160 volts, currents to 10 amperes, and by frequencies from 0 through 63 Hz during the time the generators are coming up to rated speed

3 3.1 1 Trip pickup, reverse power monitors. The performance of the monitor shall not be adversely affected under reverse power conditions by a generator load unbalance up to 50 percent at 0.4 lagging to unity pf and a phase voltage unbalance up to 5 percent. Under any combinations of unbalance, on any phase up to these limits, the monitor shall provide tripping action at a preset reverse power level of 2.5 to 10 percent of rated load reverse power at unity pf (see 3 3 4) The trip point shall be continuously adjustable over this range. The monitor shall not trip under any condition of forward 3-phase power, with load unbalance up to 100 percent and pf from 0.4 to unity, leading or lagging.

3.3.1.2 Trip pickup, power-sensing monitors. Power level to actuate the monitor shall be between 80 to 130 percent of rated power at unity pf for each stage (see 3 3 4) Monitor shall reset to the normal condition when power to the mon-itor is reduced to 85 ± 5 percent of the set trip point. The monitor shall not trip under any condition of forward 3-phase power, with load unbalance up to 100 percent and pf from 0.4 to unity, leading or lagging as long as the set point has not been exceeded. It shall not trip under any condition of reverse power.

3.3.2 Indicators. The driving signals shall be a positive 5 volt plus or minus 3 percent with a minimum current of 25 milliamperes (mA).

3.3.2.1 Reverse power. Reverse power monitors shall have two light emitting diodes (LED) mounted in such a manner that they are visible on the front of the unit One LED shall light when the set point has been achieved, the other when the delay has timed out for trip command. In addition terminal board 2 shall have two signals each capable of driving an external LED showing the same events

3 3 2 2 Power-sensing Power-sensing monitors shall have three light emitting diodes mounted in such a manner that they are visible on the front of the unit. One LED shall light when the set point has been achieved, the second when the first stage time delay has completed with the third lighting when the second stage delay is completed.

3.3.3 Ratings.

3 3.3 1 Input. The burden placed on a transformer shall be within 10 percent of that stated on the drawing (see 3.22.1), but not to exceed 15 volt-amperes.

3.3.3.2 Output. When specified (see 6.2), the monitor shall energize a 115 volts alternating current (Vac) circuit breaker shunt trip coil The maximum power required during inrush is 602 watts for 30 milliseconds (ms) This shall be provided using a solid state device (see 3.4).

3.3.4 Trip settings. Trip settings for reverse power (see 3 3 4 1), and for power-sensing (see 3.3 4 2) Trip pickup adjustment will be internal and accessible by removal of a cover. The trip values shall be maintained for either leading or lagging reactive current values. The trip points shall have an accuracy and repeatability of plus or minus 2 percent over the temperature range of 10 to 65 degrees Celsius (°C).

3.3.4.1 Reverse power. The monitor trip pickup shall be adjustable from 2.5 to 10 percent rated power with distinct markings at each 2.5 percent increments. The tolerance of the settings shall be plus or minus 5 percent.

3.3.4.2 Power-sensing The monitor trip pickup shall be adjustable in 5 percent increments (or less) or continuously adjustable between 80 to 130 percent of rated power at unity pf for each stage

3.3.4.3 Trip reset. The monitor shall reset when power is reduced to 85 ± 5 percent of the power setting

3.3.5 Trip delay. Trip delay for power-sensing monitors (see 3.3 5 3) Reverse power monitors shall be as specified in 3 3.5 1 and 3 3 5 2, and shall be easily changed to each requirement by changing an internal jumper. Trip delay adjustment will be internal, and accessible by removal of a cover (see 6.2) The trip delay points shall have an accuracy and repeatability of plus or minus 2 percent over the operating temperature range of 10 to 65°C Trip delay shall be determined from the time that the generator reaches the set point and not from when this is sensed within the unit. This is to assure constant delay times that are not dependent upon thru put times of different circuit designs so that units are interchangeable

3.3.5.1 Steam turbine and diesel mode. A tripping time delay shall be provided and shall be adjustable from 5 through 25 seconds Five distinct markings shall be provided at 5 second intervals. The accuracy of each setting shall be maintained within plus or minus 15 percent of the set value. Time delay shall be inversely proportional to the power.

3 3.5.2 Gas turbine mode. The trip time delay shall be 275 ± 25 ms After 20 percent of full rated load forward power is sensed for 1 second the trip delay shall be less then 125 ms.

3 3.5.3 Power-sensing monitor. The time delay shall be in two stages

3.3.5.3.1 First stage After set point value is exceeded (see 3.3 4 2), the monitor shall initiate a trip command after a selectable delay of 167, 200 or 350 ms. If the set point value decreases to 85 ± 5 percent or less of setting for longer than 15 ± 5 ms the selectable time delay and the variable time delay shall reset to time zero.

3 3.5.3 2 Second stage. If the power level continuously stays above or rise above set point after initiating a trip command for first stage load shed, a second stage load shed command shall be initiated after a variable time delay of 0 1 to 39 seconds.

3.3.6 Terminal boards For complete interchangeability table I gives the required connection to be made to the monitors. Reverse power monitors shall have two terminal boards, TB1 (10 terminals) and TB2 (8 terminals). Power-sensing monitors shall have one terminal board, TB1 (12 terminals).

TABLE I Required terminal board connections

| Terminal | Reverse power TB1 | Reverse power TB2 | Power-sensing TB1 |
|---|---|---|---|
| 1 | Input A0 Voltage | | Input A0 voltage |
| 2 | Input B0 Voltage | | Input B0 voltage |
| 3 | Input C0 Voltage | | Input C0 voltage |
| 4 | CT - XA1 | Ground | CT - XA1 |
| 5 | CT - XA2 | Trip CMD IND | CT - XA2 |
| 6 | CT - XC1 | Set point IND | CT - XC1 |
| 7 | CT - XC2 | | CT - XC2 |
| 8 | Spare | | Spare |
| 9 | T-1 - Trip CMD | | T-1A - Trip CMD |
| 10 | T-2 - Trip CMD | | T-2A - Trip CMD |
| 11 | | | T-1B - Trip CMD |
| 12 | | | T-2B - Trip CMD |

3 3 7 Factory settings. Unless otherwise specified in the contract or order, each monitor shall be shipped with its power trip setting and trip delay set to the lowest possible value, and with its reverse power trip delay set to 10 seconds (see 6 2) Unless otherwise specified in the contract, reverse power monitors shall be shipped in the steam turbine and diesel mode

3.4 Static components. Semiconductors shall be in accordance with MIL-S-19500 with preference given to MIL-STD-701 and microcircuits shall be in accordance with MIL-M-38510 with preference given to MIL-STD-1562. Controlled rectifiers and diode rectifiers shall be of the silicon type as specified in MIL-STD-701.

3.5 Duty The monitor shall sense the generator circuit continuously The monitor shall be capable of tripping the breaker for 40 consecutive operations at 1 minute intervals without overheating or being damaged (see 4.7.7.2)

3.6 Enclosure. The terminal board for connection of external wires shall be mounted on the outside of the monitor enclosure front The overall and mounting dimensions shall be as shown on figure 2 or 3, to provide interchangeability of monitors between manufacturers.

3.7 Internal components. The internal components shall be mounted on a component board The back side of the component assembly shall be provided with standoff posts. Upon completion of fabrication, all small components and associated wiring mounted on the removable component board shall be sprayed with an air drying clear varnish as specified in MIL-E-917, to prevent corrosion or oxidation

3 8 Ventilation. Ventilation shall be by natural convection

3.9 Operating temperature. The monitor shall meet all the specification requirements when operating at temperature of 10 to 65°C, and its case shall have a temperature rise of not more than 15°C.

3.10 Mounting. The monitor shall be mounted within a switchboard enclosure in accordance with MIL-S-16036, and as shown on figure 2 or 3. The external terminal block shall be similar to that shown on figure 1.

3.11 Weight. The weight of the monitor shall not exceed 7 pounds.

3.12 Insulation resistance. The insulation resistance of all circuits shall be not less than 10 megohms at 25°C (see 4.7.3).

3.13 Dielectric strength Monitors shall withstand for a period of 1 minute a dielectric test voltage between separate circuits and to ground as follows (see 4 7 13)

| Input or output voltage (ac) | Test voltage root mean square (rms) |
|---|---|
| 60 and under | 600 |
| 61 to 90 | 900 |
| 91 to 600 | 1000 plus twice rated |
| over 600 | 2000 plus 2-1/4 times rated |

3.14 Vibration. The monitor shall withstand type I vibration tests in accordance with MIL-STD-167-1 without mechanical damage and without causing spurious trips or otherwise malfunctioning (see 4.7.14).

3 15 Shock. The monitor shall withstand the shock tests specified in MIL-S-901 on the light weight machine without the use of shock mounts With rated voltage applied, all control devices shall function properly after the shock test. Mounting fixture 4A shall be as specified in MIL-S-901 (see 4.7 15) Spurious trips shall not occur during the shock tests

3.16 Noise. The monitors shall meet the requirements in accordance with MIL-STD-740 for type 3 and grade C equipment (see 4.7.9)

3 17 Interference. The monitor shall meet the interference limits in accordance with MIL-STD-461, class A4 equipments and subsystems (see 4 7 10)

3.18 Warm-up. The monitor shall meet the performance requirements as specified herein after being energized for 1 minute (see 4 7 5)

3.19 Reliability. The upper test mean time between failure (MTBF), for continuous and intermittent operation, in accordance with MIL-STD-781, shall be 40,000 hours under the environmental conditions specified for the monitor when tested in accordance with 4.7 11.

3.20 Maintainability. The monitor shall facilitate troubleshooting, fault isolation and repair, down to the lowest non-repairable part or non-repairable assembly (see 4 7.12).

3.21 Label plates. Label plates shall be in accordance with MIL-P-15024 and MIL-P-15024/5.

3.21.1 Identification plate. An identification plate shall be mounted on the front cover of the enclosure as shown on figure 2 or 3. The identification plate for the complete equipment shall indicate the following data·

Monitor._____ Voltage: 115 Freq. 60
Type: (see 1.2) Phase: 3 Duty: Cont. Operating temp· 10 to 65°C
Pickup:_____ Trip delay·_____
Cat. No:_____ Ser. No._____ Year _____
Stk. No._____ Contract:_____ NAVSEA _____
Manufacturer's name and Cage code·_____

Note. Trip delay shall be shown as 5-25 seconds when a continuous adjustment is provided.

3.21.2 Connection diagram plate A wiring drawing shall be reduced and mounted on the enclosure front as shown on figure 1. The material and engraving requirements shall be as specified in 3 21

3.21.3 Component identification. Components shall be identified by stamping or stenciling the data immediately adjacent to the component.

3.22 Technical data. (See 6.2, 6.3, and 6.4).

3.22.1 In addition to the data required by the data ordering document, the drawing shall include the input power from each metering transformer

4 QUALITY ASSURANCE PROVISIONS

4.1 Responsibility for inspection. Unless otherwise specified in the contract or purchase order, the contractor is responsible for the performance of all inspection requirements (examinations and tests) as specified herein Except as otherwise specified in the contract or purchase order, the contractor may use his own or any other facilities suitable for the performance of the inspection requirements specified herein, unless disapproved by the Government The Government reserves the right to perform any of the inspections set forth in the specification where such inspections are deemed necessary to ensure supplies and services conform to prescribed requirements.

4 1 1 Responsibility for compliance. All items shall meet all requirements of sections 3 and 5. The inspection set forth in this specification shall become a part of the contractor's overall inspection system or quality program The absence of any inspection requirements in the specification shall not relieve the contractor of the responsibility of ensuring that all products or supplies submitted to the Government for acceptance comply with all requirements of the contract. Sampling inspection, as part of the manufacturing operations, is an acceptable practice to ascertain conformance to requirements, however, this does not authorize submission of known defective material, either indicated or actual, nor does it commit the Government to accept defective material.

4.2 Classification of inspection. The examination and testing of monitors shall be classified as follows:

(a) Qualification inspection (see 4.4)
(b) Quality conformance inspection (see 4.6).

4.3 Inspection conditions. Unless otherwise specified (see 6 2), all inspections shall be performed in accordance with the test conditions of MIL-STD-202.

4.4 Qualification inspection Qualification tests shall be conducted at a laboratory satisfactory to the Naval Sea Systems Command (NAVSEA) Qualification examination and inspection shall consist of the examination and tests specified in table II. Requalification is required every 4 years consisting of examination and tests specified in table II.

4.4.1 Sample for qualification inspection. One monitor of each type shall be submitted for the examination and tests specified in table II.

4.5 Quality conformance inspection. Each production monitor shall be subjected to the quality conformance inspection specified in table II

TABLE II. Qualification, requalification, and quality conformance inspections

| Inspection | Qualification inspection | Requalification inspection | Quality conformance inspection | Requirement paragraph | Inspection paragraph |
|---|---|---|---|---|---|
| General examination | X | X | X | 3.2 | 4.6 |
| Effectiveness of enclosure | X | -- | -- | 3.6 | 4 7 1 |
| Creepage and clearance | X | X | -- | 3.2 | 4 7 2 |
| Insulation resistance | X | X | -- | 3 12 | 4 7 3 |
| Wiring | X | X | -- | 3 3 | 4 7 4 |
| Warm-up | X | X | -- | 3.18 | 4 7 5 |
| Temperature rise | X | -- | -- | 3.9 | 4.7.6 |
| Sensing | X | X | X | 3.3 | 4.7 7.2 |
| Trip recovery | X | X | -- | 3.5 | 4.7.7.3 |
| Over current | X | X | -- | 3 3 | 4 7 7 4 |
| Over voltage | X | X | -- | 3 3 | 4 7 7 5 |
| Voltage surge | X | X | -- | 3.3.1 | 4 7.8 |
| Noise | X | X | -- | 3 16 | 4 7 9 |
| Interference | X | -- | -- | 3 17 | 4.7.10 |
| Reliability | X | X | -- | 3.19 | 4 7 11 |
| Maintainability | X | X | -- | 3.20 | 4 7 12 |
| Dielectric strength | X | X | X | 3 13 | 4.7 13 |
| Vibration | X | -- | -- | 3.14 | 4.7 14 |
| Shock | X | X | -- | 3.15 | 4.7.15 |

Required for reverse power monitors only.

4.6 Quality conformance inspection report (See 6 3)

4.7 Test procedures. Tests, as specified herein, shall be performed on both reverse power and power-sensing monitors

4.7 1 Enclosure The enclosure shall be as shown on figure 2 or 3

4.7 2 Creepage and clearance Creepage and clearance distances shall be demonstrated by actual measurement to be in accordance with MIL-E-917

4.7.3 Insulation resistance Insulation resistance shall be as specified in 3 12 The measurement of insulation resistance shall be made with all circuits of equal voltage above ground connected together. Circuits or groups of circuits of different voltage above ground shall be tested separately. Insulation resistance shall be measured with an insulation-resistance-indicating meter at 500 volts direct current (Vdc). The time of test voltage application shall not be less than 60 seconds. Measurements shall be made at room temperature (20 to 25°C). The relative humidity and surrounding temperature shall be recorded The monitor shall not be damaged when the generator cables or the external monitor leads are tested between phases with the 500 Vdc tester.

4.7.4 Wiring The connecting potential leads and shunt trip coil leads under rated operating conditions shall be sequentially opened and closed and the current leads shorted. The monitor shall then be inspected for damage.

4.7.5 Warm-up. When the monitor is subjected to rated voltage and frequency at both 10 and 65°C ambient, the equipment shall meet the requirements specified in 3.3 and 3.18.

4.7.6 Temperature rise. The temperature rise shall be monitored for compliance with 3.9.

4.7.7 Sensing.

4.7.7.1 AC monitors. The monitor shall be tested when connected as shown on figure 1. The test power supply shall be 115 volts plus or minus 10 percent and 60 Hz plus or minus 5 percent The power supply shall be connected to a common load bus The definition of load unbalance and voltage unbalance is as specified in 6.7. The burden placed on each current transformer by the monitor shall be as specified in 3.3.3.1.

4.7.7.2 Sensing test. Each monitor shall perform within the specified power and time delay limits (see 3.3.4 and 3.3.5) when at an operating temperature range between 10 and 65°C In each test, the trip shall be tested at each current setting as specified in 3.3 4 and 3.3.5. During the testing specified in 4 7.7.2.1 through 4.7.7.2.4, it shall be demonstrated that the monitor has tripped the applicable circuit breakers for at least 40 operations as specified in 3 5 Reverse power monitors shall be tested as specified in 4 7.7.2.1 through 4.7.7.2.3. Power-sensing monitors shall be tested as specified in 4.7.7.2 3 and 4 7.7.2.4. For reverse power monitors there shall be no circuit breaker tripping under any condition of forward power Quality conformance tests shall be done at room temperature (20 to 25°C). Trip points and trip delay points shall be tested for accuracy and repeatability over the operating temperature range of 10 to 65°C. Room temperature (20 to 25°C) is the reference.

4.7.7.2 1 Sensing test #1. Sensing test #1 shall be conducted as follows Ac systems shall have a 3-phase load on the bus, for both a leading and lagging pf of 0.4. Close the circuit breaker with the generator being tested contributing 25 percent of its rated capacity to the bus. Under this condition, stop the generator prime mover. The circuit breaker shall trip. Repeat the above test with the generator supplying 100 percent of its rating to the bus. The circuit breaker shall trip Repeat each of the above tests three times

4.7.7.2.2 Sensing test #2. Sensing test #2 shall be conducted as follows Adjust the test generator to supply approximately 25 percent of its rating to the 3-phase power bus and on phase AB of the power bus provide a 15 percent load unbalance (see 6.7) with the resulting unbalance on all phases. Under the above conditions, with each a 0.4 leading and a 0 4 lagging pf, stop the prime mover The monitor shall trip the generator circuit breaker within the trip settings as specified in 3.3.4, and trip delay as specified in 3.3.5. In addition, repeat the above load unbalance tests on each phase BC and CA. Also repeat all of the above tests at approximately 80 percent of the generator load capacity

4.7.7.2 3 Sensing test #3. Sensing test #3 shall be conducted as follows Connect the test generator to the energized 3-phase bus with no load on phase AB and 100 percent generator load on phases BC and CA. Repeat the above test at various leading and lagging pf from 0 4 to unity and resulting 3-phase voltage unbalance The monitor shall not trip the circuit breaker. Repeat the above no-load test on each phase BC and CA

4.7.7.2.4 Sensing test #4. Sensing test #4 shall be conducted as follows Connect the test generator to a balanced load on a 3-phase bus. With the monitor pickup settings at lower and upper adjustment in accordance with 3 3.4 and at least one other setting, test for compliance with 3.3 4 and 3.3.5.

4.7.7.3 Trip recovery test The monitor trip delay shall be set at approximately 10 seconds The monitor shall be subjected to reverse power so that a trip condition is sensed for 5 seconds The power sensed by the monitor shall be immediately changed to forward power. The breaker shall not trip

4.7.7 4 Current circuit overload The monitor current sensor input shall be increased to 10 amperes (forward power for reverse power monitors and reverse power for power-sensing monitors) for 2 minutes with the monitor in a space at room temperature not less than 23°C, to determine that no damage occurs to internal components and that the monitor does not cause closing of the trip circuit. Immediately reverse power and verify that trip occurs in accordance with 3 3 4 and 3 3 5 This will verify that the internal circuitry does not saturate and become inoperative.

4.7.7.5 Overvoltage test The monitor potential sensor input shall be increased to 160 volts with 5 amperes on the current circuit This test shall be performed for 2 minutes at a minimum of 23°C, to determine that no damage occurs to internal components and the trip circuit is not activated.

4.7.8 Voltage surge. The monitor shall be subjected to a spike voltage test to 2500 volts in accordance with MIL-STD-1399, section 300.

4.7 9 Noise. Noise tests shall be conducted in accordance with MIL-STD-740 for type 3 and grade C equipment (see 3 16) The monitor shall be energized simulating actual operation.

4.7.10 Electromagnetic interference. The monitor shall be tested in accordance with MIL-STD-461 (see 3.17)

4.7.11 Reliability tests.

4 7.11.1 Demonstration phase. Unless otherwise specified (see 6.2), the demonstration phase of reliability testing shall be conducted on at least 5 (but not more than 10) monitors in accordance with MIL-STD-781. MTBF shall be as required in 3.19

4 7.11.1.1 Test schedule. The test shall consist of an uninterrupted series of three 8-hour periods per day. One of the three periods shall be manned. The remaining two periods need not be manned.

4.7.11.1.2 Stress conditions. Unless otherwise specified (see 6.2), environmental and electrical stress conditions shall be as specified under the combined environments for shipboard equipment (sheltered) in accordance with appendix B of MIL-STD-781 or as follows:

(a) Electrical stress: When operation from two or more nominal voltages is required, the nominal voltage for reliability testing shall be the highest required nominal voltage
(b) Thermal stress: The test time for each thermal cycle shall be 8 hours

4.7.11.2 Sampling phase. When specified (see 6.2), the sampling phase of reliability testing shall be conducted on at least 5 (but not more than 10) relays in accordance with test plan IVC of MIL-STD-781 The upper test MTBF shall be as required in 3.19. The test schedule and stress conditions of 4 7 11 1 1 and 4.7.11.1.2 shall apply.

4 7.12 Maintainability demonstration When specified (see 6 2), compliance with 3 20 shall be verified through a maintenance demonstration procedure, maintenance test selection, and maintenance task performance in accordance with test method 1-A of appendices A and B of MIL-STD-471.

4.7.13 Dielectric strength tests.

4.7 13 1 General The dielectric strength test shall be made after all of the tests specified in 4.7.1 through 4.7.11 have been completed. The dielectric test shall be made upon the completely assembled equipment and not upon individual parts.

4 7.13 2 Test voltage. The frequency of the test voltage shall be not less than 60 Hz and shall approximate a true sine wave. The value of test voltage shall be as specified in 3.13 and shall be applied continuously for a period of 1 minute All rectifiers, bridges and Zener references shall be shorted out before applying the voltage.

4.7.13.3 Measurement of test voltage. The measurement of the voltage used in dielectric tests shall be made by the voltmeter method whereby the meter derives its voltage from the high voltage circuit either directly or by means of a voltmeter coil placed in the testing transformer, or through an auxiliary ratio transformer.

4.7 13.4 Points of application. The test voltage shall be successively applied between each electric circuit and all other electric circuits and grounded metal parts not electrically connected to it.

4.7.14 Vibration Equipment shall be subjected to type I vibration tests in accordance with MIL-STD-167-1 when energized at rated voltage and frequency (see 3.14).

4.7.15 Shock. Shock tests shall be conducted in accordance with MIL-S-901 for a grade A, class I equipment (see 3.15). After shock tests, the equipment shall be given an operational test as specified in 3.3. The equipment shall be energized at rated voltage and current and shall not cause spurious trips during the shock tests.

4.7.16 Noncompliance. The monitor shall be rejected if it fails any one of the following:

(a) Breakage or appreciable distortions of any parts.
(b) Electrical malfunction. The sensing features shall not malfunction, become inoperative or deviate from specifications.
(c) Insulation resistance shall not vary from its original value.

4.8 Inspection of packaging. Sample packages and packs, and the inspection of the preservation packing and marking for shipment stowage and storage shall be in accordance with the requirements of section 5 and the documents specified therein.

5. PACKAGING

(The packaging requirements specified herein apply only for direct Government acquisition. For the extent of applicability of the preparation of the packaging requirements of referenced documents listed in section 2, see 6.5.)

5 1 Packaging requirements. Monitors shall be preserved level A, C or commercial, and packed level A, B, C or commercial, as specified (see 6 2) and marked in accordance with MIL-E-17555 and shall include bar codes and applicable packaging acquisition options therein as specified (see 6 2) In addition, for Navy acquisitions, the following applies

(a) Navy fire-retardant requirements.

(1) Lumber and plywood Unless otherwise specified see 6 2, all lumber and plywood including lamimaterial used in shipping container construction members, blocking, bracing, and reinforcing shall be fire-retardant treated material conforming to MIL-L-19140 as follows:

Levels A and B - Type II - weather resistant.
Category I - general use.

Level C - Type I - non-weather resistant.
Category I - general use

(2) Fiberboard. Unless otherwise specified (see 6.2), fiberboard used in the construction of class-domestic, non-weather resistant fiberboard and cleated fiberboard boxes including interior packaging forms shall meet the flamespread and the specific optic density requirements of PPP-F-320 and amendments thereto

6 NOTES

6.1 Intended use. The reverse power monitor, when mounted in a generator control unit, shall sense a power reversal on a 60 Hz, 3-phase generator, and cause the tripping of the circuit breaker for the motorized generator to prevent damage to its prime mover. The power-sensing monitor shall sense a high power demand and provide two stages of load shedding by tripping selected load circuit breakers.

6.2. Acquisition requirements. Acquisition documents must specify the following.

(a) Title, number and date of this specification.
(b) Type designation (see 1.2).
(c) Issue of DoDISS to be cited in the solicitation, and if required, the specific issue of individual documents referenced (see 2.1.1)
(d) Circuit breaker shunt trip voltage (see 3.3.3.2).
(e) Whether reverse power monitor is in gas turbine or steam turbine and diesel mode (see 3.3.5).
(f) Factory settings for shipment (see 3.3.7).
(g) When drawings are to be provided (see 3.22)
(h) Whether inspection conditions are required (see 4 3)
(i) Conditions for reliability tests, if other than specified herein (see 4.7.11).
(j) Whether maintainability demonstration is required (see 4 7 12)
(k) Level of preservation, packing and marking, if required (see 5 1)
(l) When fire retardant materials are not required (see 5.1)

6 3 Consideration of data requirements. The following data requirements should be considered when this specification is applied on a contract. The applicable Data Item Descriptions (DID's) should be reviewed in conjunction with the specific acquisition to ensure that only essential data are requested/provided and that the DID's are tailored to reflect the requirements of the specific acquisition. To ensure correct contractual application of the data requirements, a Contract Data Requirements List (DD Form 1423) must be prepared to obtain the data, except where DoD FAR Supplement 27.475-1 exempts the requirement for a DD Form 1423.

| Reference Paragraph | DID Number | DID Title | Suggested Tailoring |
|---|---|---|---|
| 3.22 | DI-E-7031 | Drawings, engineering and associated lists | Level 3 |
| 4.6 | DI-T-5329 | Inspection and test report | ------- |

The above DID's were those cleared as of the date of this specification The current issue of DoD 5010.12-L, Acquisition Management Systems and Data Requirements Control List (AMSDL), must be researched to ensure that only current, cleared DID's are cited on the DD Form 1423.

6 4 Technical manuals. The requirement for technical manuals should be considered when this specification is applied on a contract. If technical manuals are required, military specifications and standards that have been cleared and listed in DoD 5010 12-L Acquisition Management Systems and Data Requirements Control List (AMSDL) must be listed on a separate Contract Data Requirement List (DD Form 1423), included as an exhibit to the contract The technical manuals must be acquired under separate contract line item in the contract

6.5 Subcontracted material and parts. The packaging requirements of referenced documents listed in section 2 do not apply when material and parts are acquired by the contractor for incorporation into the equipment and lose their separate identity when the equipment is shipped.

6.6 Qualification. With respect to products requiring qualification, awards will be made only for products which are, at the time set for opening of bids, qualified for inclusion in Qualified Products List, QPL-24350 whether or not such products have actually been so listed by that date. The attention of the contractors is called to these requirements, and manufacturers are urged to arrange to have the products that they propose to offer to the Federal Government tested for qualification in order that they may be eligible to be awarded contracts or purchase orders for the products covered by this specification The activity responsible for the Qualified Products List is the Naval Sea Systems Command, SEA 55Z3, Department of the Navy, Washington, DC 20362-5101, and information pertaining to qualification of products may be obtained from that activity Application for qualification test shall be made in accordance with "Provisions Governing Qualification SD-6" (see 6 6 1)

6.6 1 Copies of "Provisions Governing Qualification SD-6" may be obtained upon application to Commanding Officer, Naval Publications and Forms Center, 5801 Tabor Avenue, Philadelphia, PA 19120.

6.7 Definitions.

6.7.1 The definitions in accordance with section 300 of MIL-STD-1399 apply.

6.7.2 Load unbalance (percent) =

$$\frac{\text{(maximum line current - minimum line current) X 100}}{\text{generator rated line current}}$$

6.7.3 Voltage unbalance (percent) =

$$\frac{\text{(maximum voltage L.L. - minimum voltage L.L.) X 100}}{\text{generator rated voltage L.L.}}$$

6.8 Provisioning. Provisioning Technical Documentation (PTD), spare parts, and repair parts should be furnished as specified in the contract. When ordering spare parts or repair parts for the equipment covered by this specification, the contract should state that such spare parts and repair parts should meet the same requirements and quality assurance provisions as the parts used in the manufacture of the equipment. Packaging for such parts should also be specified

6.9 Supersession data. This specification supersedes MIL-M-24350A(SH) dated 27 September 1982 and MIL-R-24563B(SH) dated 15 November 1977.

6 10 Subject term (key word) listing.

Generator control
Load shedding
Switchgear
Trip point

6.11 Changes from previous issue Marginal notations are not used in this revision to identify changes with respect to the previous issue due to the extensiveness of the changes.

Preparing activity.
Navy - SH
(Project 5925-N113)

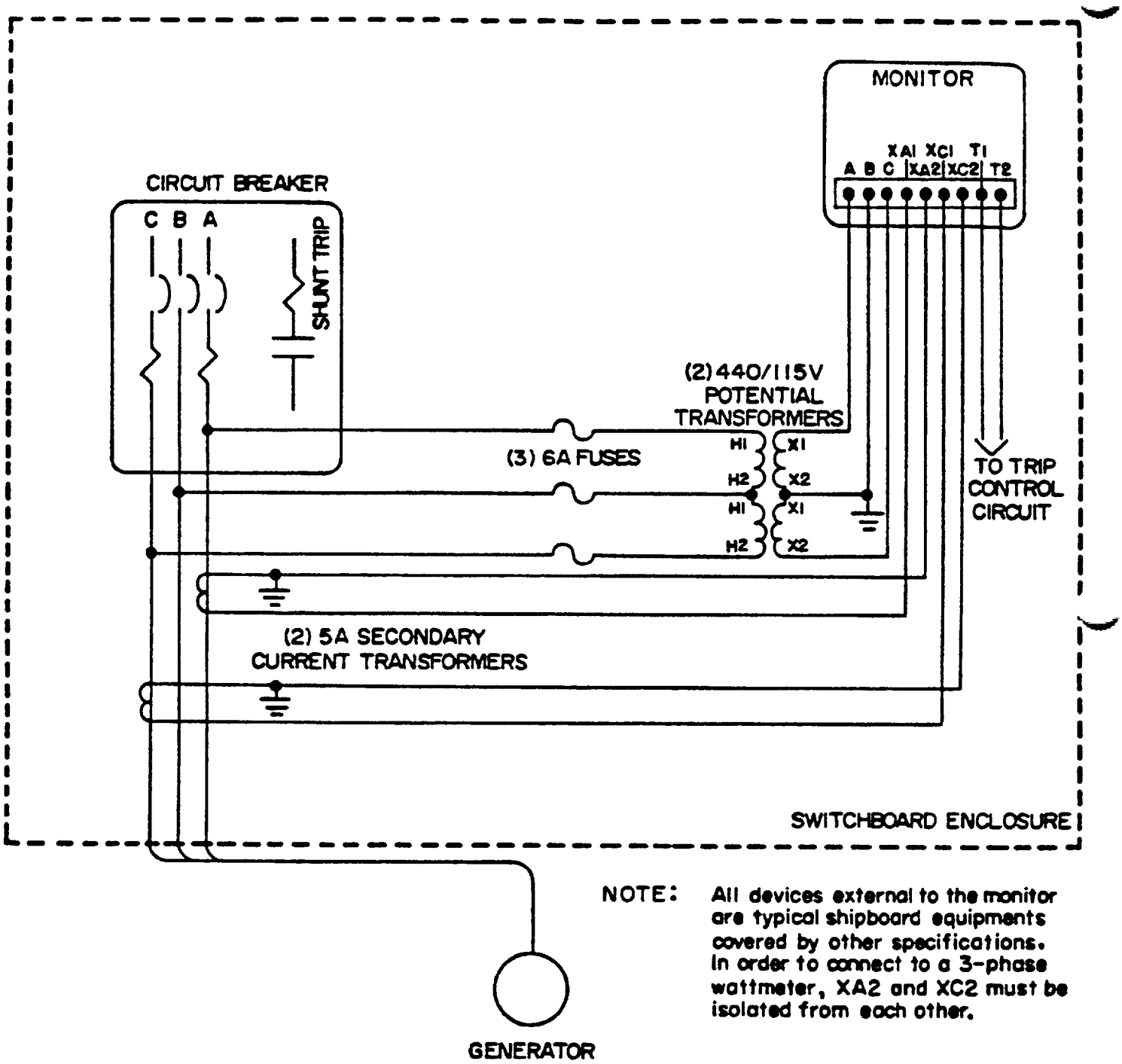


NOTE: All devices external to the monitor are typical shipboard equipments covered by other specifications. In order to connect to a 3-phase wattmeter, XA2 and XC2 must be isolated from each other.

SH 132317413

FIGURE 1. Reverse power monitor-typical shipboard connections

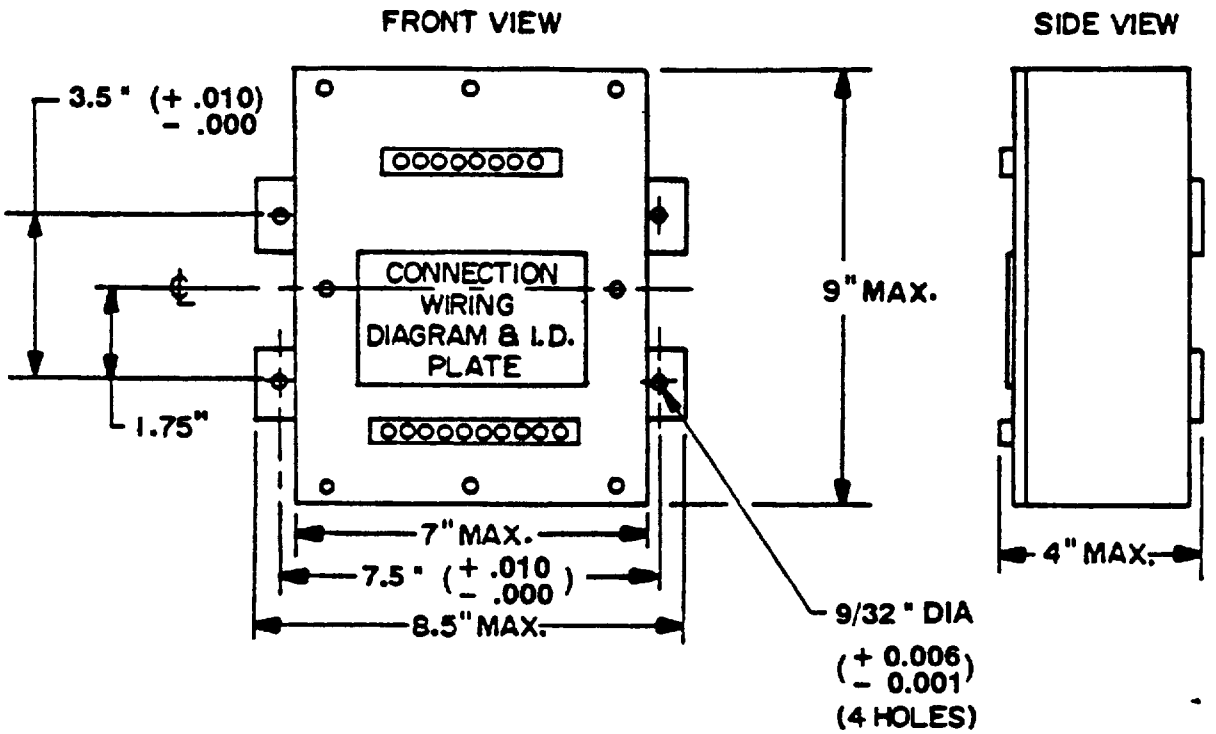


TOLERANCE ± 0.03 UNLESS OTHERWISE NOTED

SH 132317414

FIGURE 2. Reverse power monitor-outline and mounting dimensions

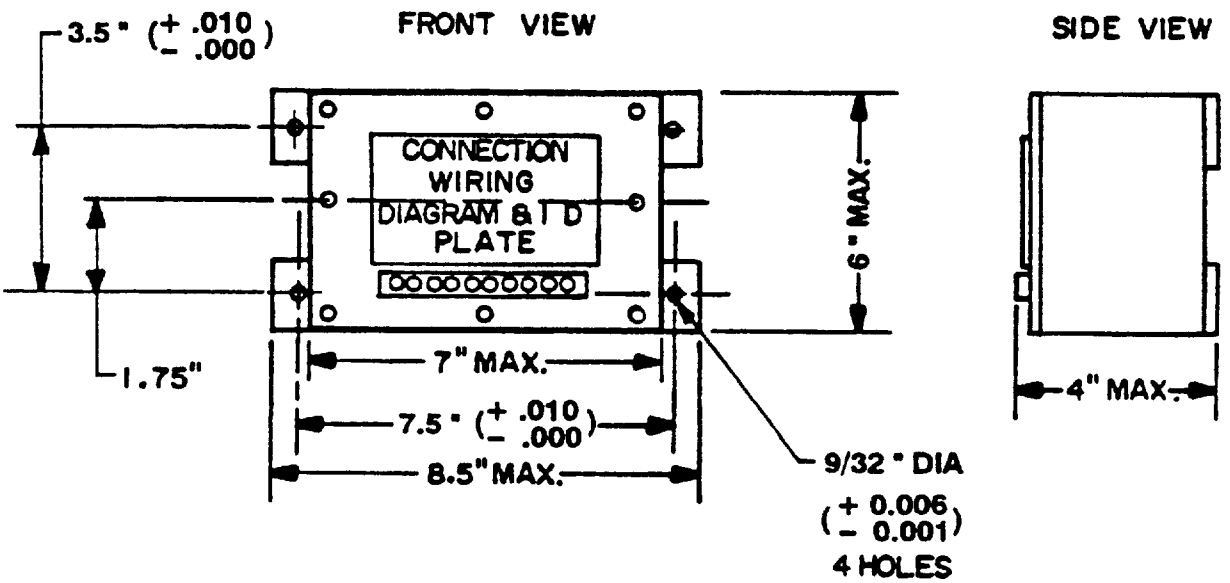


TOLERANCE ± 0.03 UNLESS OTHERWISE NOTED

SH 132317415

FIGURE 3 Power-sensing monitor-outline and mounting dimensions.

**INSTRUCTIONS:** In a continuing effort to make our standardization documents better, the DoD provides this form for use in sub-itting comments and suggestions for improvements All users of military standardization documents are invited to provide su ions. This form may be detached, folded along the lines indicated, taped along the loose edge *(DO NOT STAPLE)*, and mailed. In block 5, be as specific as possible about particular problem areas such as wording which required interpretation, was too rigid, restrictive, loose, ambiguous, or was incompatible, and give proposed wording changes which would alleviate the problems. Enter in block 6 any remarks not related to a specific paragraph of the document. If block 7 is filled out, an acknowledgement will be mailed to you within 30 days to let you know that your comments were received and are being considered.

*NOTE* This form may not be used to request copies of documents, nor to request waivers, deviations, or clarification of specification requirements on current contracts. Comments submitted on this form do not constitute or imply authorization to waive any portion of the referenced document*(s)* or to amend contractual requirements.

*(Fold along this line)*

*(Fold along this line)*

DEPARTMENT OF THE NAVY
MMANDER
VAL SEA SYSTEMS COMMAND (SEA 55Z3)
PARTMENT OF THE NAVY
SHINGTON, DC 20362

**OFFICIAL BUSINESS**
**PENALTY FOR PRIVATE USE $300**

NO POSTAGE NECESSARY IF MAILED IN THE UNITED STATES

**BUSINESS REPLY MAIL**
FIRST CLASS PERMIT NO 12503 WASHINGTON D C

POSTAGE WILL BE PAID BY THE DEPARTMENT OF THE NAVY

COMMANDER
NAVAL SEA SYSTEMS COMMAND (SEA 55Z3)
DEPARTMENT OF THE NAVY
WASHINGTON, DC 20362-5101

(TO DETACH THIS FORM, CUT ALONG THIS LINE)

# STANDARDIZATION DOCUMENT IMPROVEMENT PROPOSAL

*(See Instructions – Reverse Side)*

| | |
|---|---|
| 1 DOCUMENT NUMBER<br>MIL-M-24350B(SH) | 2 DOCUMENT TITLE Monitors, Reverse Power and Power-Sensing, Electrical Power (Naval Shipboard Use) (Metric). |
| 3a. NAME OF SUBMITTING ORGANIZATION | 4 TYPE OF ORGANIZATION *(Mark one)*<br>☐ VENDOR<br>☐ USER<br>☐ MANUFACTURER<br>☐ OTHER *(Specify)* _____ |
| b. ADDRESS *(Street, City, State, ZIP Code)* | |

5 PROBLEM AREAS

a. Paragraph Number and Wording

b. Recommended Wording

c. Reason/Rationale for Recommendation

6 REMARKS

| | |
|---|---|
| 7a. NAME OF SUBMITTER *(Last, First, MI)* – Optional | b. WORK TELEPHONE NUMBER *(Include Area Code)* – Optional |
| c. MAILING ADDRESS *(Street, City, State, ZIP Code)* – Optional | 8. DATE OF SUBMISSION *(YYMMDD)* |

DD FORM 82 MAR 1426

PREVIOUS EDITION IS OBSOLETE.