FED. SUP CLASS
4730

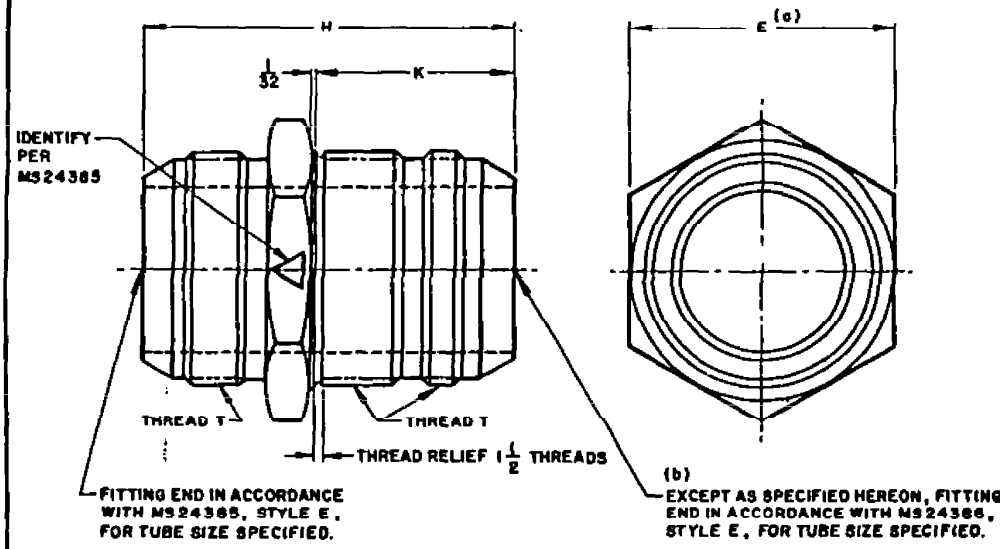

(a) FOR HEX TOLERANCE SEE MS24835.
(b) THE K DIMENSIONS ON THIS DRAWING ARE 3/16 GREATER THAN SPECIFIED ON MS24386. THE THREAD PORTION ADJACENT TO THE HEX, THEREFORE, IS 3/16 GREATER THAN THAT ON MS24386. THIS IS TO PERMIT USE OF FITTING THRU ARMOR PLATE.

MATERIAL: STEEL (BARS OR SHAPES); ALUMINUM ALLOY, CORROSION RESISTANT STEEL (CRES), TITANIUM ALLOY (BARS, SHAPES OR FORGINGS). SEE PROCUREMENT SPECIFICATION.
FINISH: SEE PROCUREMENT SPECIFICATION.
NO CODE LETTER IN PART NUMBER FOR STEEL.
ADD O IN PLACE OF DASH FOR ALUMINUM ALLOY (EXCEPT 7075-T73).
ADD J IN PLACE OF DASH FOR CRES, TYPE 304.
ADD K IN PLACE OF DASH FOR CRES, TYPE 316.
ADD S IN PLACE OF DASH FOR CRES, TYPE 347.
ADD T IN PLACE OF DASH FOR TITANIUM ALLOY.
ADD W IN PLACE OF DASH FOR 7075-T73 ALUMINUM ALLOY.
TITANIUM IS NOT RECOMMENDED FOR USE IN OXYGEN SYSTEMS.
EXAMPLE OF PART NUMBERS:
MS24393-8 - NIPPLE, 1/2 TUBING, STEEL.
MS24393O8 - NIPPLE, 1/2 TUBING, ALUMINUM ALLOY (EXCEPT 7075-T73).
MS24393J8 - NIPPLE, 1/2 TUBING, CRES, TYPE 304.
MS24393K8 - NIPPLE, 1/2 TUBING, CRES, TYPE 316.
MS24393S8 - NIPPLE, 1/2 TUBING, CRES, TYPE 347.
MS24393T8 - NIPPLE, 1/2 TUBING, TITANIUM ALLOY.
MS24393W8 - NIPPLE, 1/2 TUBING, 7075-T73 ALUMINUM ALLOY.
BREAK ALL SHARP EDGES AND REMOVE ALL HANGING BURRS AND SLIVERS.
DIMENSIONS IN INCHES. UNLESS OTHERWISE SPECIFIED, TOLERANCE: FRACTIONS ±1/64.
IN ADDITION TO THE SAMPLING REQUIREMENTS OF THE PROCUREMENT SPECIFICATION, THE SURFACE OF THE CONE ENDS ON 100% OF THE NIPPLES OF A LOT SHALL BE INSPECTED.
REFERENCED DOCUMENTS SHALL BE OF THE ISSUE IN EFFECT ON DATE OF INVITATIONS FOR BID.
FOR DESIGN FEATURE PURPOSES, THIS STANDARD TAKES PRECEDENCE OVER PROCUREMENT DOCUMENTS REFERENCED HEREIN.

(F) DENOTES CHANGES

P.A. AIR FORCE-99 (F) Other Cust AIR FORCE-99	TITLE NIPPLE, TUBE, 3/8 BULKHEAD, PRECISION TYPE	MILITARY STANDARD MS 24393
PROCUREMENT SPECIFICATION MIL-F-5509	SUPERSEDES: ~~AN-832~~ (F)	SHEET 1 OF 2

DD FORM 672-1 Limited Coordination

PREVIOUS EDITIONS OF THIS FORM ARE OBSOLETE.

4730-F274

APPROVED 12 FEB 57 REVISED (A) 6 MAR 58 (B) 20 APR 60 (C) 10 FEB 67 (D) 16 JUN 78 (E) 22 MAR 79 (F) 16 Apr 82

This Military Standard is approved for use by HQ AFLC CASO/LODS, Federal Center, Battle Creek, MI 49016, Department of the Air Force, and is available for use by all Departments and agencies of the Department of Defense.

Review activities: ARMY-ME, AV NAVY-AS DSC-CS

User activities:

FED. SUP CLASS
4730

DASH NO.	TUBING OD	THREAD T (REF)	E	H	K
2	1/8	5/16-24UNJF-3A	.563	1-53/64	1- 7/64
3	3/16	3/8 -24UNJF-3A	.625	1-55/64	
4	1/4	7/16-20UNJF-3A	.688	2- 9/64	1-13/64
5	5/16	1/2 -20UNJF-3A	.750		
6	3/8	9/16-18UNJF-3A	.813	2- 7/32	1- 9/32
8	1/2	3/4 -16UNJF-3A	1.000	2-29/64	1- 7/16
10	5/8	7/8 -14UNJF-3A	1.125	2-23/32	1-37/64
12	3/4	1-1/16-12UNJ -3A	1.375	3- 1/32	1- 3/4
16	1	1-5/16-12UNJ -3A	1.425	3- 4/64	
20	1-1/4	1-5/8 -12UNJ -3A	1.875	3- 5/32	1-51/64
24	1-1/2	1-7/8 -12UNJ -3A	2.125	3- 9/16	1-13/16
28	1-3/4	2-1/4 -12UNJ -3A	2.500	3-37/64	1-31/32
32	2	2-1/2 -12UNJ -3A	2.750	3-53/64	2- 3/32

APPROVED 12 FEB 57 REVISED (F) FOR CHANGES SEE PAGES 1 & 2. 16 Apr 82

This Military Standard is approved for use by HQ AFLC CASO/LODS, Federal Center, Battle Creek, MI 49016, Department of the Air Force, and is available for use by all Departments and agencies of the Department of Defense.

Review activities: ARMY - ME, AV NAVY - AS DSC - CS

User activities:

P.A. AIR FORCE-99 (F) Other Cust AIR FORCE-99	TITLE NIPPLE, TUBE, 3/8 BULKHEAD, PRECISION TYPE	MILITARY STANDARD MS 24393
PROCUREMENT SPECIFICATION MIL-F-5509	SUPERSEDES: AMSC-(F)	SHEET 2 OF 2

DD FORM 672-1 Limited Coordination

PREVIOUS EDITIONS OF THIS FORM ARE OBSOLETE.

4730-F274