INCH-POUND

MS21959D
4 August 2011
SUPERSEDING
MS21959C
15 June 2000

DETAIL SPECIFICATION SHEET

BODY, CLUSTER FITTING, TWO-WAY, 90°, INTERNAL BOSS

This specification is approved for use by all Departments and Agencies of the Department of Defense.

The requirements for acquiring the product described herein shall consist of this specification sheet and SAE AS4875.

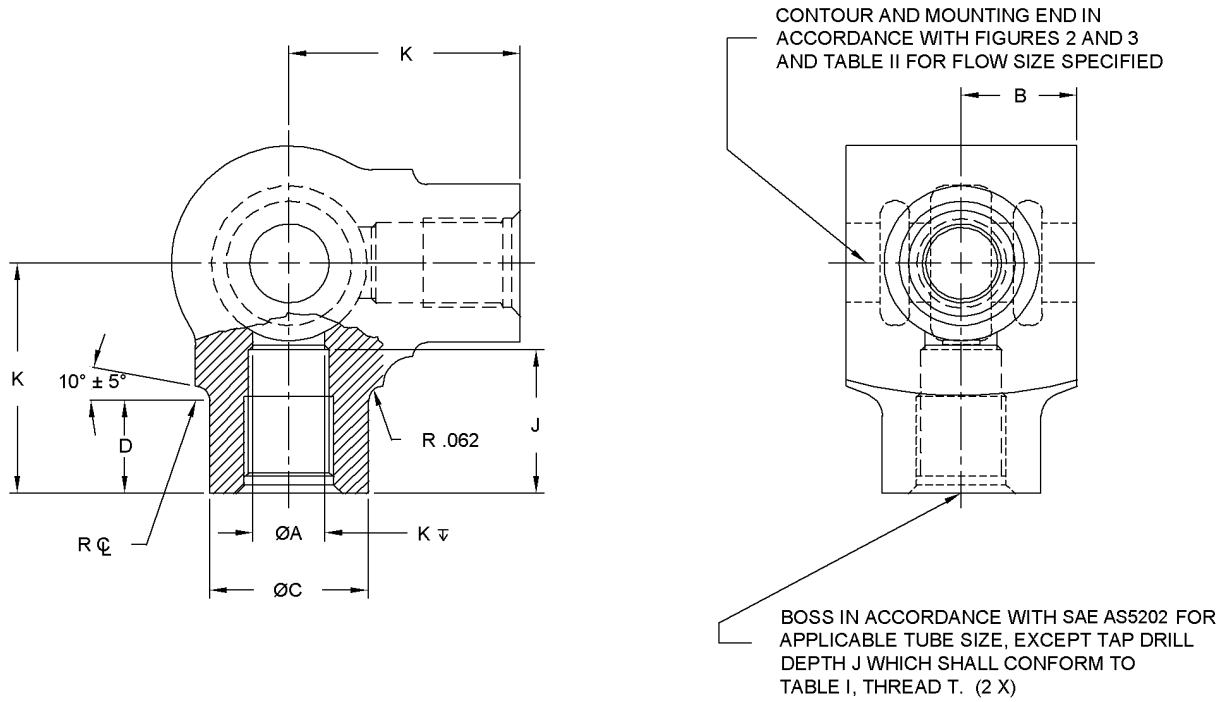

Inches	mm
.062	1.58

FIGURE 1. Body, cluster fitting.

TABLE I. Dimensions. 1/ 2/ 3/

Low flow sizes									
Low flow size		Tube OD Inches (mm)	Thread T SAE AS8879	A Inches (mm)	B Inches (mm)	C ± .031 Inches (mm)	D ± .031 Inches (mm)	J Inches (mm)	K Inches (mm)
Al Alloy 7075	Al Alloy 2014/2024								
W4L	-4L	.250 (6.35)	.4375-20UNJF-3B	.312 (7.93)	.500 (12.7)	.688 (17.48)	.406 (10.31)	.625 (15.88)	1.062 (26.98)
W5L	-5L	.312 (7.93)	.500-20UNJF-3B	.344 (8.74)	.500 (12.7)	.750 (19.05)	.438 (11.13)	.625 (15.88)	1.094 (27.79)
W6L	-6L	.375 (9.53)	.5625-18UNJF-3B	.344 (8.74)	.500 (12.7)	.812 (20.63)	.469 (11.91)	.625 (15.88)	1.125 (28.58)

TABLE I. Dimensions - Continued. 1/ 2/ 3/

High flow sizes									
High flow size		Tube OD Inches (mm)	Thread T SAE AS8879	A Inches (mm)	B Inches (mm)	C ± .031 Inches (mm)	D ± .031 Inches (mm)	J Inches (mm)	K Inches (mm)
Al Alloy 7075	Al Alloy 2014/2024								
W4H	-4H	.250 (6.35)	.4375-UNJF-3B	.312 (7.93)	.594 (15.09)	.688 (17.48)	.297 (7.54)	.625 (15.88)	1.219 (30.96)
W5H	-5H	.312 (7.93)	.500-UNJF-3B	.375 (9.53)	.594 (15.09)	.750 (19.05)	.312 (7.93)	.625 (15.88)	1.250 (31.75)
W6H	-6H	.375 (9.53)	.5625-UNJF-3B	.406 (10.31)	.594 (15.09)	.812 (20.63)	.375 (9.53)	.625 (15.88)	1.312 (33.33)
W8H	-8H	.500 (12.7)	.750-UNJF-3B	.422 (10.72)	.594 (15.09)	1.125 (28.58)	.625 (15.88)	.750 (19.05)	1.500 (38.1)

1/ Aluminum alloy 2014 and 2024 parts are cancelled. Use Aluminum alloy 7075 parts for new design. Cancelled parts may be used till stock is exhausted.
2/ Dimensions are in inches.
3/ Metric equivalents are given for information only.

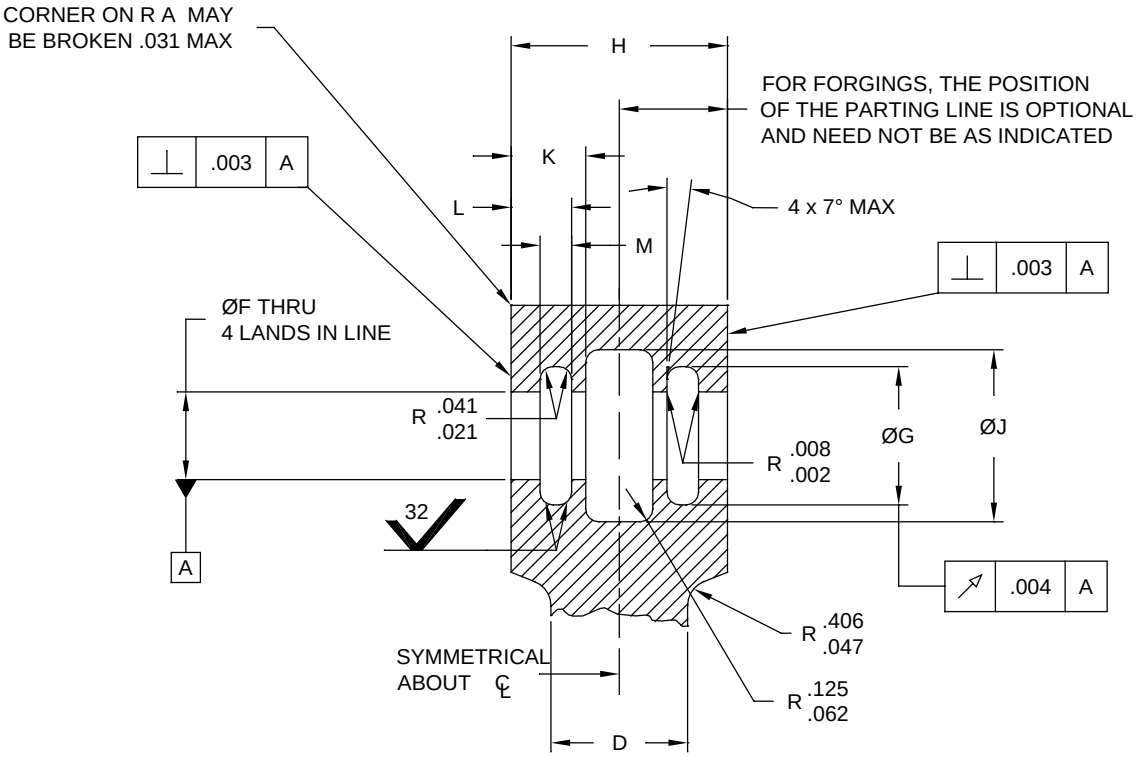

MOUNTING END DIMENSIONS

Inches	mm	Inches	mm	Inches	mm
.002	.05	.021	.53	.062	1.57
.003	.08	.031	.79	.125	3.18
.004	.10	.041	1.04	.406	10.31
.008	.20	.047	1.19		

FIGURE 2. Mounting end.

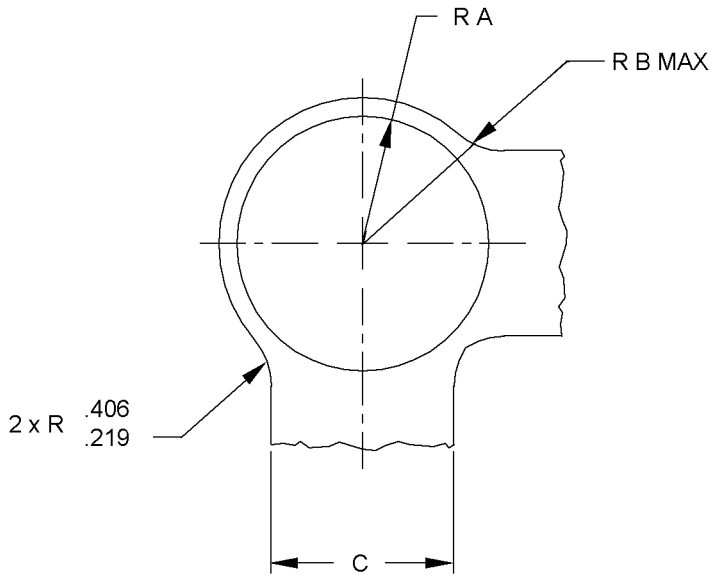

CONTURE DIMENSIONS EXTERNAL

Inches	mm	Inches	mm
.406	10.31	.219	5.56

FIGURE 3. External contour.

TABLE II. Dimensions for contour and mounting end. 1/ 2/ 3/ 4/

Type Fitting	A ± .031 Inches (mm)	B Max Inches (mm)	C Max Inches (mm)	D Max Inches (mm)	F ± .0005 Inches (mm)	G ± .004 Inches (mm)	H ± .005 Inches (mm)	J ± .010 Inches (mm)	K ± .010 Inches (mm)	L ± .004 Inches (mm)	M ± .005 Inches (mm)
Low Flow	.562 (14.28)	.636 (16.15)	.844 (21.44)	.995 (25.27)	.500 (12.7)	.664 (16.87)	1.000 (25.4)	.797 (20.24)	.312 (7.93)	.249 (6.33)	.143 (3.63)
High Flow	.812 (20.63)	.909 (23.09)	1.156 (29.36)	1.188 (30.18)	.8125 (20.64)	1.045 (26.54)	1.188 (30.18)	1.078 (27.38)	.375 (9.53)	.283 (7.19)	.175 (4.45)

1/ B radius is the max envelope dimension for forging draft, flash, and other projections on A radius.
2/ Dimensions C and D represent the max envelope which shall be large enough to meet final part dimensions.
3/ Dimensions are in inches.
4/ Metric equivalents are given for information only.

REQUIREMENTS:

Dimensions. See figure 1, figure 2, figure 3, table I and table II.
Unless otherwise specified tolerances for decimals are ± .010, angles ± .5°.

Dimensioning and tolerancing are in accordance with ASME Y14.5.

Material. Aluminum alloy 7075-T73 in accordance with SAE AMS-QQ-A-225/9. Aluminum alloy forging, 7075-T73 in accordance with SAE AMS-QQ-A-367.

Finish. See aerospace standard SAE AS4875. Aluminum alloy 7075 fittings shall be dyed brown.

Surfaces. All machined surfaces shall be finished to 250 μin Ra (.00635mm), unless otherwise specified.

Surface finish shall be in accordance with ASME B46.1.

Fitting surface shall be free of all burrs and slivers.

Identification of product. The Part or Identifying Number (PIN) for the fitting consists of the MS number, the material code and size number.

Example of PIN: MS21959W4L

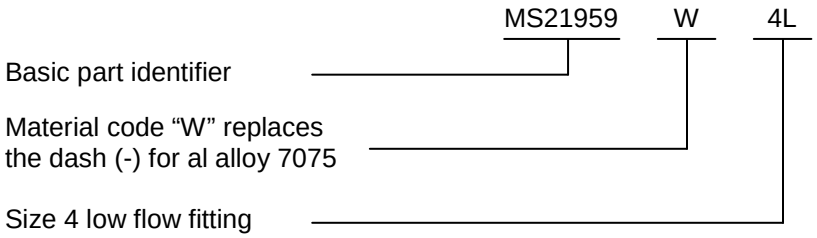

Changes from previous issue. Marginal notations are not used in the revision to identify changes with respect to the previous issue due to the extensiveness of the changes.

Referenced documents. In addition to SAE AS4875, this document references the following:

SAE AMS-QQ-A-225/9	SAE AS5202	ASME B46.1
SAE AMS-QQ-A-367	SAE AS8879	ASME Y14.5

CONCLUDING MATERIAL

Custodians:
Army - AV
Navy – AS
Air Force – 99
DLA - CC

Review activities:
Army – AR
Navy – SA, MC
Air Force - 71

Preparing activity:
DLA - CC

(Project 4730-2011-068)

NOTE: The activities listed above were interested in this document as of the date of this document. Since organization and responsibilities can change, you should verify the currency of the information above using the ASSIST Online database at https://assist.daps.dla.mil.