INCH-POUND

AN917 Rev 9
19 July 2011
SUPERSEDING
AN917 Rev 8
21 March 1979

DETAIL SPECIFICATION SHEET

TEE, PIPE

Reinstated after 19 July 2011. Inactive for new design.
For new design, use SAE-AS4857.

This specification is approved for use by all Departments and Agencies of the Department of Defense.

The requirements for acquiring the product described herein shall consist of this specification sheet and SAE-AS4842.

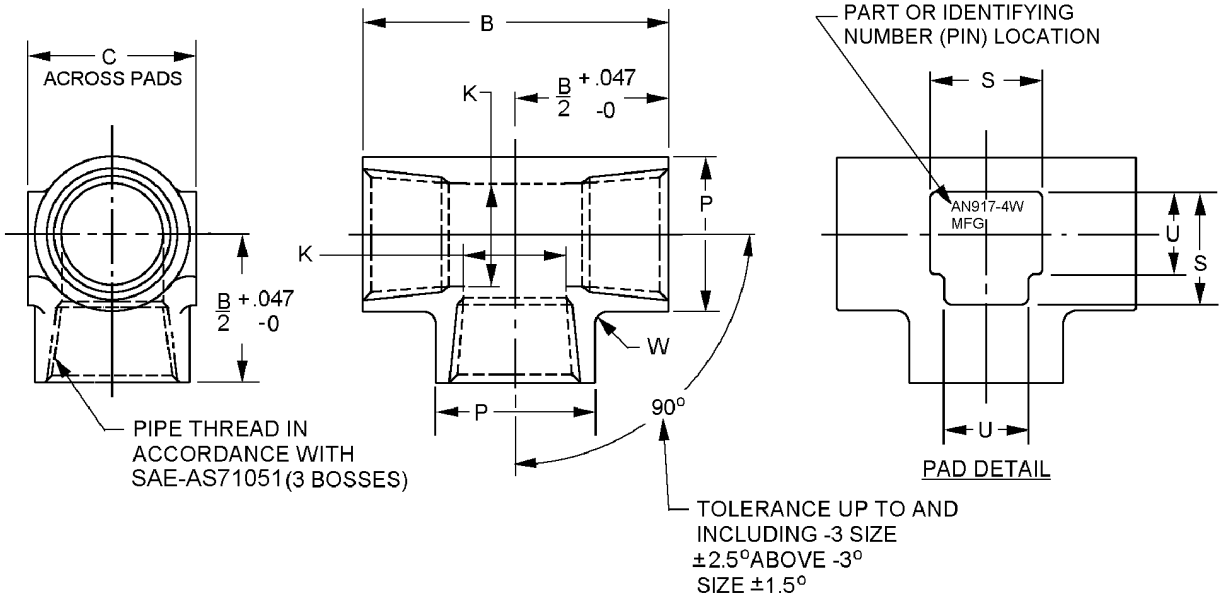

Inch	mm
.047	1.19

FIGURE 1. Tee dimensions and configurations.

Dash number	A Pipe thread ANPT SAE-AS71051	B +.094 (2.39) -0.00 inches (mm)	C inches (mm)	K Dia. inches (mm)	
1	1/8-27	1.281 (32.54)	.625 (15.88)	.327 (8.31)	+.000 -.016 (0.41)
2	1/4-18	1.781 (45.24)	.813 (20.65)	.423 (10.74)	+.000 -.019 (0.48)
3	3/8-18	1.938 (49.23)	.938 (23.83)	.557 (14.15)	+.000 -.028 (0.71)
4	1/2-14	2.469 (62.71)	1.188 (30.18)	.688 (17.48)	+.000 -.034 (0.86)
6	3/4-14	2.688 (68.28)	1.375 (34.93)	.897 (22.78)	+.000 -.040 (1.02)
8	1-11 1/2	3.250 (82.55)	1.750 (44.45)	1.128 (28.65)	+.000 -.037 (0.94)
10	1/ 1/4-11 1/2	3.375 (85.73)	2.156 (54.76)	1.471 (37.36)	+.000 -.036 (0.91)

Dash number	P Dia. inches (mm)	S Approx inches (mm)	U Approx inches (mm)	W Rad. inches (mm)
1	.578 (14.68)	.500 (12.70)	. 250 (6.35)	.063 (1.60)
2	.781 (19.84)	.625 (15.88)	.375 (9.53)	.094 (2.39)
3	.922 (23.42)	.750 (19.05)	.500 (12.70)	.094 (2.39)
4	1.156 (29.36)	.875 (22.23)	.625 (15.88)	.125 (3.18)
6	1.359 (34.52)	1.000 (25.40)	.750 (19.05)	.125 (3.18)
8	1.688 (42.88)	1.125 (28.58)	.875 (22.23)	.125 (3.18)
10	2.094 (53.19)	1.250 (31.75)	1.000 (25.40)	.156 (3.96)

NOTES:

1. Dimensions are in inches.
2. Metric equivalents are given for information only.
3. Unless otherwise specified tolerances are ±.016 inch (0.41 mm).
4. Break sharp edges .and remove all hanging burrs and slivers
5. Machined surfaces shall be finished to 125µin Ra, forged surfaces shall be 250µin Ra, unless otherwise specified on the figures. Surface finish shall be in accordance with ASME B46.1.
6. For design features purposes, this standard takes precedence over documents referenced herein.
7. Referenced documents shall be of the issue in effect on date of invitation for bid.

FIGURE 1. Tee dimensions and configurations - Continued.

REQUIREMENTS:

Dimensions and configuration shall be in accordance with figure 1.

Materials and finishes shall be in accordance with SAE-AS4842, see table I for material code.

TABLE I. Material and code letters.

Code letter	Material
Blank	Copper alloy
J	CRES, type 304
K	CRES, type 316
R	CRES, type 321
T 1/	Titanium
W	Aluminum alloy 7075-T73

1/ Not for use in oxygen systems.

PIN: The PIN consists of the prefix “AN” the specification sheet number, a dash number for pipe size, and material code letter. Unassigned PIN’s shall not be used.

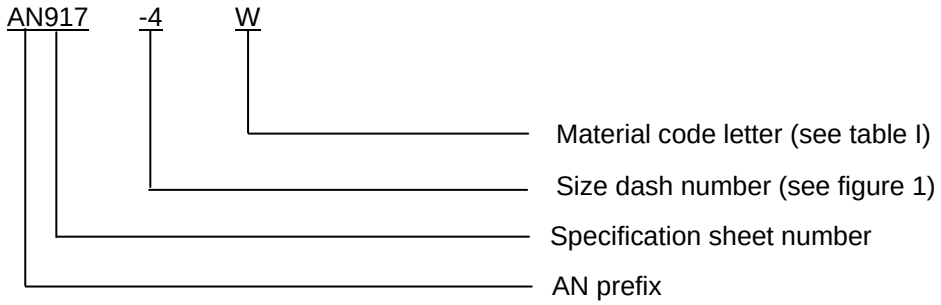

PIN example: AN917-4W indicates a tee, 1/2-14 ANPT internal pipe threads, aluminum alloy 7075-T73.

Supersession data:

Due to stress corrosion cracking aluminum alloys 2014 and 2024 “D” designator has been replaced by aluminum alloy 7075 “W” designator. Example: AN917-8D use AN917-8W.

Metal cracking due to high temperatures CRES alloy 347 “S” designator has been replaced by CRES alloy 321 “R” designator. Example: AN917-8S use AN917-8R.

Marking: Part shall be permanently marked with the AN PIN, and include the manufacturers CAGE, name, or trademark.

Table II provides a detailed cross-reference of AN917 PINs and replacement SAE-AS4857 PINs. Users are cautioned to evaluate replacements for their particular application.

CAUTION: The superseding information is valid as of the date of this specification and may be superseded by subsequent revisions of the superseding document.

TABLE II. Cross-reference data.

AN PIN (inactive)	Pipe size	Replacement AS PIN (for new design)	Replacement AN PIN (inactive)
AN917-1	.125	AS4857-01	
AN917-1D	.125	AS4857W01	AN917-1W
AN917-1J	.125	AS4857J01	
AN917-1K	.125	AS4857K01	
AN917-1S	.125	AS4857R01	AN917-1R
AN917-1T	.125	None	
AN917-1W	.125	AS4857W01	
AN917-2	.250	AS4857-02	
AN917-2D	.250	AS4857W02	AN917-2W
AN917-2J	.250	AS4857J02	
AN917-2K	.250	AS4857K02	
AN917-2S	.250	AS4857R02	AN917-2R
AN917-2T	.250	None	
AN917-2W	.250	AS4857W02	
AN917-3	.375	AS4857-03	
AN917-3D	.375	AS4857W03	AN917-3W
AN917-3J	.375	AS4857J03	
AN917-3K	.375	AS4857K03	
AN917-3S	.375	AS4857R03	AN917-3R
AN917-3T	.375	None	
AN917-3W	.375	AS4857W03	
AN917-4	.500	AS4857-04	
AN917-4D	.500	AS4857W04	AN917-4W
AN917-4J	.500	AS4857J04	
AN917-4K	.500	AS4857K04	
AN917-4S	.500	AS4857R04	AN917-4R
AN917-4T	.500	None	
AN917-4W	.500	AS4857W04	

TABLE II. Cross-reference data - Continued.

AN PIN (inactive)	Pipe size	Replacement AS PIN (for new design)	Replacement AN PIN (inactive)
AN917-6	.750	AS4857-06	
AN917-6D	.750	AS4857W06	AN917-6W
AN917-6J	.750	AS4857J06	
AN917-6K	.750	AS4857K06	
AN917-6S	.750	AS4857R06	AN917-6R
AN917-6T	.750	None	
AN917-6W	.750	AS4857W06	
AN917-8	1.000	AS4857-08	
AN917-8D	1.000	AS4857W08	AN917-8W
AN917-8J	1.000	AS4857J08	
AN917-8K	1.000	AS4857K08	
AN917-8S	1.000	AS4857R08	AN917-8R
AN917-8T	1.000	None	
AN917-8W	1.000	AS4857W08	
AN917-10	1.250	AS4857-10	
AN917-10D	1.250	AS4857W10	AN917-10W
AN917-10J	1.250	AS4857J10	
AN917-10K	1.250	AS4857K10	
AN917-10S	1.250	AS4857R10	AN917-10R
AN917-10T	1.250	None	
AN917-10W	1.250	AS4857W10	

Changes from previous issues. Marginal notations are not used in this revision to identify changes with respect to the previous issue due to the extent of the changes.

Referenced documents. In addition to SAE-AS4842, this document references the following:

ASME B46.1
SAE-AS4857
SAE-AS71051

CONCLUDING MATERIAL

Custodians:
Army - AV
Navy - AS
Air Force - 99
DLA - CC

Review activities:
Navy - MC, SH
Air Force - 71

Preparing activity:
DLA - CC

(Project 4730-2011-078)

NOTE: The activities listed above were interested in this document as of the date of this document. Since organizations and responsibilities can change, you should verify the currency of the information above using the ASSIST Online database at https://assist.daps.dla.mil.