INCH-POUND

AN910 Rev 11
7 June 2011
SUPERSEDING
AN910 Rev 10
5 October 1983

DETAIL SPECIFICATION SHEET

COUPLING, PIPE

Reinstated after 7 June 2011. Inactive for new design.
For new design, use SAE-AS4859.

This specification is approved for use by all Departments and Agencies of the Department of Defense.

The requirements for acquiring the product described herein shall consist of this specification sheet and SAE-AS4842.

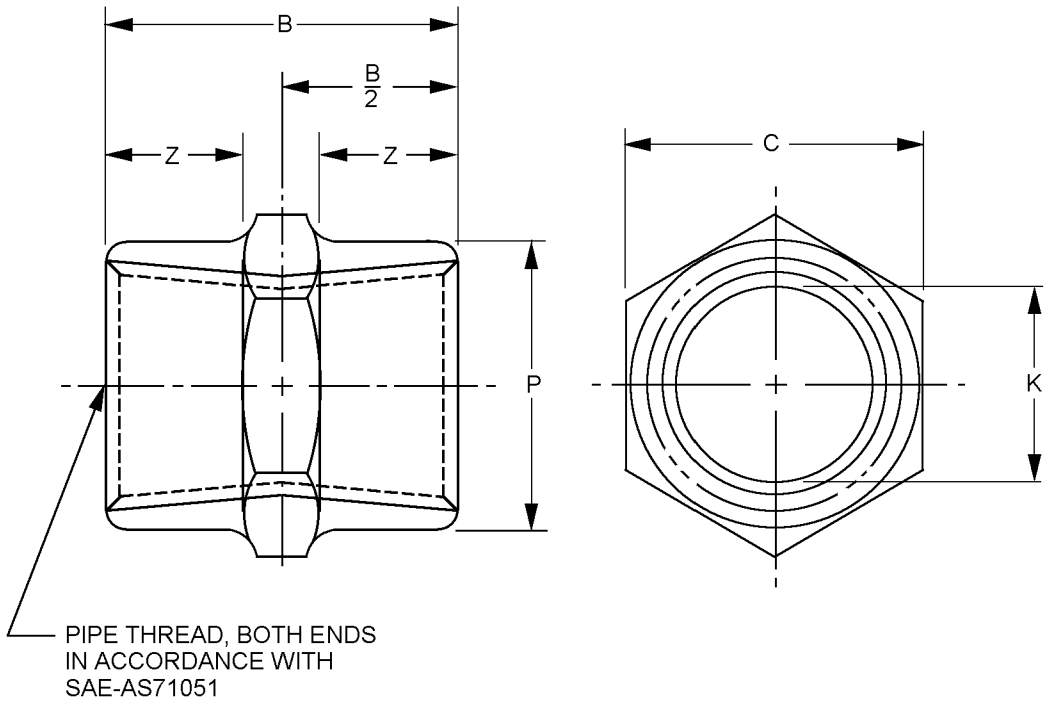

FIGURE 1. Coupling pipe dimensions and configuration.

Dash number	A Pipe thread SAE-AS71051	B +.031 (0.79) inches (mm)	C inches (mm)		K Diameter inches (mm)	
1	1/8-27 ANPT	.844 (21.44)	.625 (15.88)	±.004 (0.10)	.327 (8.31)	+.000 -.016 (0.41)
2	1/4-18 ANPT	1.125 (28.58)	.813 (20.65)	±.004 (0.10)	.423 (10.74)	+.000 -.019 (0.48)
3	3/8-18 ANPT	1.219 (30.96)	.938 (23.83)	±.004 (0.10)	.557 (14.15)	+.000 -.028 (0.71)
4	1/2-14 ANPT	1.594 (40.89)	1.188 (30.18)	±.005 (0.13)	.688 (17.48)	+.000 -.034 (0.86)
6	3/4-14 ANPT	1.625 (41.28)	1.375 (34.93)	±.005 (.013)	.897 (22.78)	+.000 -.040 (1.02)
8	1-11.5 ANPT	1.938 (49.23)	1.750 (44.45)	±.016 (0.41)	1.128 (28.65)	+.000 -.037 (0.94)
10	1/ 1/4-11.5 ANPT	1.938 (49.23)	2.125 (53.98)	±.020 (0.51)	1.471 (37.36)	+.000 -.036 (0.91)

Dash number	P Diameter ±.016 (0.41) inches (mm)	Z ±.016 (0.41) inches (mm)
1	.578 (14.68)	.313 (7.95)
2	.781 (19.84)	.438 (11.13)
3	.922 (23.42)	.469 (11.91)
4	1.156 (29.36)	.641 (16.28)
6	1.359 (34.52)	.641 (16.28)
8	1.688 (42.88)	.781 (19.84)
10	1.094 (27.79)	.781 (19.84)

NOTES:
1. Dimensions are in inches.
2. Metric equivalents are given for information only.
3. Break sharp edges .and remove all hanging burrs and slivers
4. Machined surfaces shall be finished to 125µ in Ra, forged surfaces shall be 250µ inches Ra, unless otherwise specified on the figures. Surface finish shall be in accordance with ASME B46.1.
5. For design features purposes, this standard takes precedence over documents referenced herein.
6. Referenced documents shall be of the issue in effect on date of invitation for bid.

FIGURE 1. Coupling pipe dimensions and configuration - Continued.

REQUIREMENTS:

The Coupling pipe dimensions and configuration shall be in accordance with figure 1 and table I.

Materials and finishes shall be in accordance with SAE-AS4842, see table I for material code letters.

TABLE I. Material and code letters.

Code letter	Material
Blank	Copper alloy
J	Corrosion resistant steel (CRES), type 304
K	CRES, type 316
R	CRES. Type 321
S	CRES, type 347
W	Aluminum alloy 7075-T73

Part or Identifying Number (PIN): The PIN consists of the letter “AN” the specification sheet number, a dash number for pipe thread size, and a material code letter for material type. Unassigned PIN’s shall not be used.

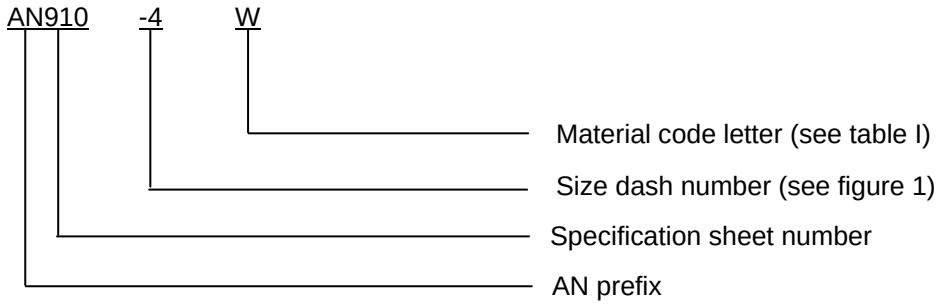

PIN example: AN910-4W indicates a coupling pipe, .500 inch (12.70 mm) ID, aluminum alloy 7075-T73.

Supersession data. The aluminum “D” designator has been replaced by the “W” designator.

Marking: Part shall be permanently marked with the AN PIN, and include the manufacturers CAGE, name, or trademark.

Table II provides a detailed cross-reference of AN910 PINs and replacement SAE-AS4859 PINs. Users are cautioned to evaluate replacements for their particular application.

CAUTION: The superseding information is valid as of the date of this specification and may be superseded by subsequent revisions of the superseding document.

TABLE II. Cross-reference data. 1/

AN PIN	Pipe Thread	Replacement AS PIN	New design
AN910-1	.125	AS4859-01	
AN910-1D	.125	AS4859W01	AS4859W01
AN910-1J	.125	AS4859J01	
AN910-1K	.125	AS4859K01	
AN910-1R	.125	AS4859R01	
AN910-1S	.125	AS4859R01	AS4859R01
AN910-1W	.125	AS4859W01	
AN910-2	.250	AS4859-02	
AN910-2D	.250	AS4859W02	AS4859W02
AN910-2J	.250	AS4859J02	
AN910-2K	.250	AS4859K02	
AN910-2R	.250	AS4859R02	
AN910-2S	.250	AS4859R02	AS4859R02
AN910-2W	.250	AS4859W02	
AN910-3	.375	AS4859-03	
AN910-3D	.375	AS4859W03	AS4859W03
AN910-3J	.375	AS4859J03	
AN910-3K	.375	AS4859K03	
AN910-3R	.375	AS4859R03	
AN910-3S	.375	AS4859R03	AS4859R03
AN910-3W	.375	AS4859W03	
AN910-4	.500	AS4859-04	
AN910-4D	.500	AS4859W04	AS4859W04
AN910-4J	.500	AS4859J04	
AN910-4K	.500	AS4859K04	
AN910-4R	.500	AS4859R04	
AN910-4S	.500	AS4859R04	AS4859R04
AN910-4W	.500	AS4859W04	

See note at end of table.

TABLE II. Cross-reference data - Continued. 1/

AN PIN	Pipe Thread	Replacement AS PIN	New design
AN910-6	.750	AS4859-06	
AN910-6D	.750	AS4859W06	AS4859W06
AN910-6J	.750	AS4859J06	
AN910-6K	.750	AS4859K06	
AN910-6R	.750	AS4859R06	
AN910-6S	.750	AS4859R06	AS4859R06
AN910-6W	.750	AS4859W06	
AN910-8	1.000	AS4859-08	
AN910-8D	1.000	AS4859W08	AS4859W08
AN910-8J	1.000	AS4859J08	
AN910-8K	1.000	AS4859K08	
AN910-8R	1.000	AS4859R08	
AN910-8S	1.000	AS4859R08	AS4859R08
AN910-8W	1.000	AS4859W08	
AN910-10	1.250	AS4859-10	
AN910-10D	1.250	AS4859W10	AS4859W10
AN910-10J	1.250	AS4859J10	
AN910-10K	1.250	AS4859K10	
AN910-10R	1.250	AS4859R10	
AN910-10S	1.250	AS4859R10	AS4859R10
AN910-10W	1.250	AS4859W10	

1/ For new design use material designator R and W.

Changes from previous issues. Marginal notations are not used in this revision to identify changes with respect to the previous issue due to the extent of the changes.

Referenced documents. In addition to SAE-AS4842, this document references the following:

ASME B46.1
SAE-AS4859
SAE-AS71051

CONCLUDING MATERIAL

Custodians:
Army - AV
Navy - AS
Air Force - 99
DLA - CC

Review activity:
Air Force - 71

Preparing activity:
DLA - CC

(Project 4730-2011-062)

NOTE: The activities listed above were interested in this document as of the date of this document. Since organizations and responsibilities can change, you should verify the currency of the information above using the ASSIST Online database at https://assist.daps.dla.mil.