INCH-POUND

AN818 Rev 20
w/AMENDMENT 2
19 August 2014
SUPERSEDING
w/AMENDMENT 1
23 January 2013

DETAIL SPECIFICATION SHEET

NUT, TUBE COUPLING, SHORT

This specification is approved for use by all Departments and Agencies of the Department of Defense .

The requirements for acquiring the product described herein shall consist of this specification sheet and SAE-AS4841.

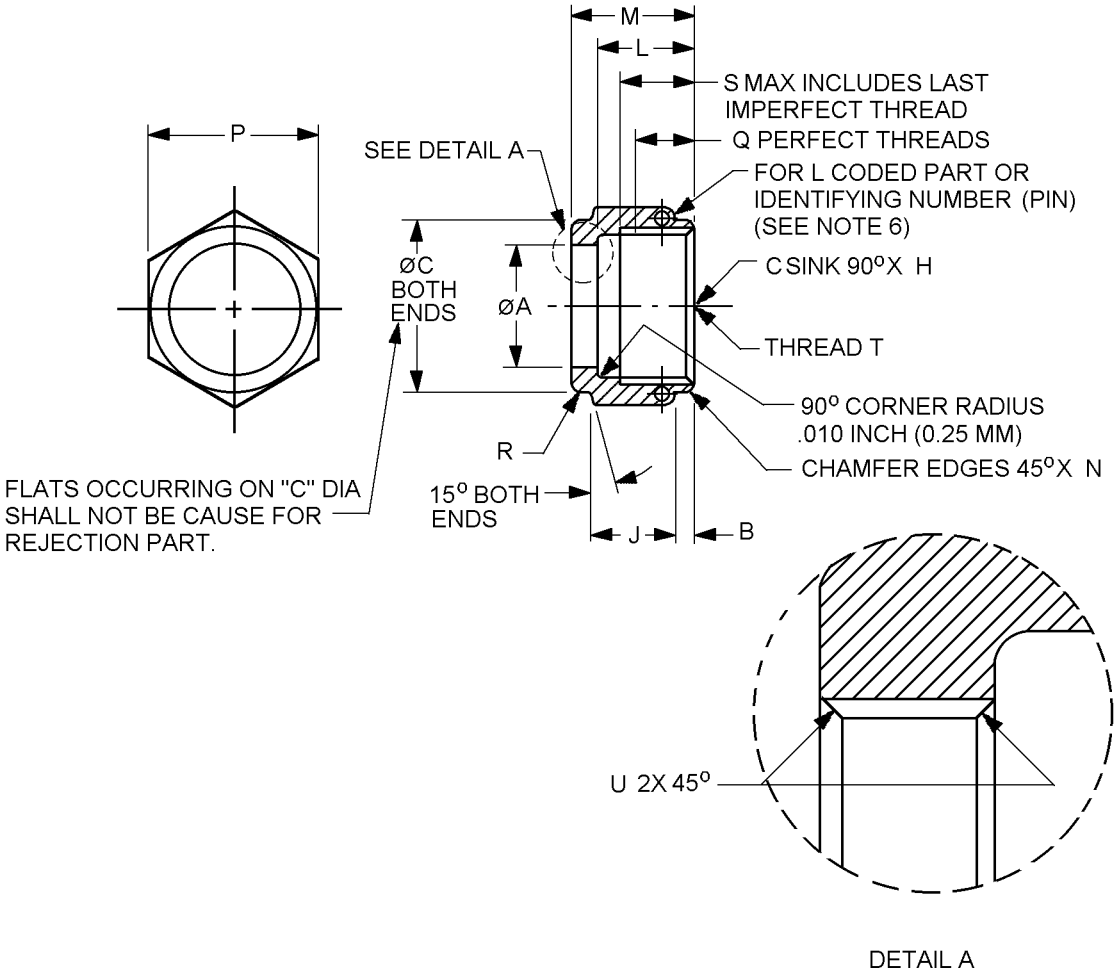


FIGURE 1. Nut, tube coupling.

| Dash number | Tube OD inches (mm) | Thread T SAE-AS8879 (See note 5) | A dia. +.003 (0.08) -.000 inches (mm) | B inches (mm) | C dia. +.000 -.010 (0.3) inches (mm) |
|---|---|---|---|---|---|
| -2 | .125 (3.18) | .3125 - 24UNJF -3B | .180 (4.57) | .109 (2.77) | .375 (9.53) |
| -3 | .188 (4.78) | .3750 - 24UNJF -3B | .242 (6.15) | .141 (3.58) | .437 (11.10) |
| -4 | .250 (6.35) | .4375 - 20UNJF -3B | .305 (7.75) | .125 (3.18) | .562 (14.27) |
| -5 | .313 (7.95) | .5000 - 20UNJF -3B | .374 (9.50) | .125 (3.18) | .625 (15.88) |
| -6 | .375 (9.53) | .5625 - 18UNJF - 3B | .440 (11.18) | .156 (3.96) | .687 (17.45) |
| -8 | .500 (12.70) | .7500 - 16UNJF - 3B | .570 (14.48) | .156 (3.96) | .875 (22.23) |
| -10 | .625 (15.88) | .8750 - 14UNJF - 3B | .698 (17.73) | .172 (4.37) | 1.000 (25.40) |
| -12 | .750 (19.05) | 1.0625 - 12UNJ - 3B | .834 (21.18) | .125 (3.18) | 1.250 (31.75) |
| -16 | 1.000 (25.40) | 1.3125 - 12UNJ - 3B | 1.089 (27.66) | .219 (5.56) | 1.500 (38.10) |
| -20 | 1.250 (31.75) | 1.6250 -12UNJ - 3B | 1.347 (34.21) | .312 (7.92) | 2.000 (50.80) |
| -24 | 1.500 (38.10) | 1.8750 - 12UNJ - 3B | 1.617 (41.07) | .359 (9.12) | 2.250 (57.15) |
| -28 | 1.750 (44.45) | 2.2500 - 12UNJ - 3B | 1.890 (48.01) | .375 (9.53) | 2.625 (66.68) |
| -32 | 2.000 (50.80) | 2.500 - 12UNJ - 3B | 2.167 (55.04) | .438 (11.13) | 2.875 (73.03) |
| -40 | 2.500 (63.50) | 3.000 - 12UNJ - 3B | 2.667 (67.74) | .406 (10.31) | 3.375 (85.73) |
| -48 | 3.000 (76.20) | 3.500 - 12UNJ - 3B | 3.180 (80.77) | .438 (11.13) | 4.000 (101.60) |

| Dash number | H dia. +.031 (0.79) -.000 inches (mm) | J inches (mm) | L inches (mm) | M inches (mm) | | N |
|---|---|---|---|---|---|---|
| -2 | .312 (7.92) | .312 (7.92) | .460 (11.68) | .542 (13.77) | ±.005 (0.13) | .010 (0.25) |
| -3 | .375 (9.53) | .375 (9.53) | .506 (12.85) | .604 (15.34) | | |
| -4 | .438 (11.13) | .406 (10.31) | .532 (13.51) | .620 (15.75) | | |
| -5 | .500 (12.70) | .484 (12.39) | .579 (14.71) | .683 (17.35) | | |
| -6 | .562 (14.27) | .500 (12.70) | .603 (15.32) | .724 (18.39) | ±.010 (0.25) | |
| -8 | .750 (19.05) | .578 (14.68) | .723 (18.36) | .849 (21.56) | | |
| -10 | .875 (22.23) | .688 (17.48) | .817 (20.75) | .974 (24.74) | | |
| -12 | 1.062 (26.97) | .750 (19.05) | .868 (22.05) | 1.021 (25.93) | | |
| -16 | 1.312 (33.32) | .766 (19.46) | .962 (24.43) | 1.131 (28.73) | | |
| -20 | 1.625 (41.28) | .766 (19.46) | 1.017 (25.83) | 1.224 (31.09) | | |
| -24 | 1.875 (47.63) | .875 (22.23) | 1.170 (29.72) | 1.412 (35.86) | | |
| -28 | 2.250 (57.15) | 1.000 (25.40) | 1.316 (33.43) | 1.568 (39.83) | | .015 (0.38) |
| -32 | 2.500 (63.50) | 1.078 (27.38) | 1.462 (37.13) | 1.740 (44.20) | | |
| -40 | 3.000 (76.20) | .969 (24.61) | 1.328 (33.73) | 1.631 (41.43) | | |
| -48 | 3.500 (88.90) | 1.063 (27.00) | 1.452 (36.88) | 1.756 (44.60) | | |

FIGURE 1. Nut, tube coupling - Continued.

| Dash number | P (Hex) inches (mm) | | Q min inches (mm) | R rad inches (mm) | S max inches (mm) | U inches (mm) |
|---|---|---|---|---|---|---|
| -2 | .375 (9.53) | +.003 (0.08) -.004 (0.10) | .251 (6.38) | .031 (0.79) | .376 (9.55) | .005 (0.13) |
| -3 | .438 (11.13) | | .338 (8.59) | .031 (0.79) | .428 (10.87) | |
| -4 | .563 (14.30) | | .380 (9.65) | .031 (0.79) | .500 (12.70) | |
| -5 | .625 (15.88) | | .401 (10.19) | .031 (0.79) | .542 (13.77) | |
| -6 | .688 (17.48) | | .413 (10.49) | .047 (1.19) | .569 (14.45) | .010 (0.25) |
| -8 | .875 (22.23) | | .484 (12.29) | .047 (1.19) | .647 (16.43) | |
| -10 | 1.000 (25.40) | | .542 (13.77) | .047 (1.19) | .727 (18.47) | |
| -12 | 1.250 (31.75) | +.003 (0.08) -.006 (0.15) | .537 (13.64) | .062 (1.57) | .753 (19.13) | |
| -16 | 1.500 (38.10) | | .563 (14.30) | .078 (1.98) | .813 (20.65) | |
| -20 | 2.000 (50.80) | ±.016 (0.41) | | .094 (2.39) | | |
| -24 | 2.250 (57.15) | ±.020 (0.51) | .661 (16.79) | .094 (2.39) | .911 (23.14) | |
| -28 | 2.625 (66.68) | | .730 (18.54) | .094 (2.39) | .930 (23.62) | .015 (0.38) |
| -32 | 2.875 (73.03) | | .844 (21.44) | .109 (2.77) | 1.094 (27.79) | |
| -40 | 3.375 (85.73) | | .718 (18.24) | .109 (2.77) | .968 (24.59) | |
| -48 | 4.000 (101.60) | | .781 (19.84) | .109 (2.77) | 1.031 (26.19) | |

NOTES:
1. Dimensions are in inches.
2. Metric equivalents are given for information only.
3. Unless otherwise specified, tolerances: Decimals ±.005 inch (0.13 mm), angles ±5°.
4. Radius or break all corners .005 +.005/-.000 inch (0.13 +0.13/-0.00 mm).
5. Dimension A and thread T shall be concentric within .005 inch (0.13 mm) full indicator movement.
6. Remove all burrs and slivers.
7. Safety wire holes and location in accordance with SAE-AS1043.
8. For design features purposes, this standard takes precedence over documents referenced herein.

FIGURE 1. Nut, tube coupling - Continued.

REQUIREMENTS:

Dimensions and configurations: See figure 1.

Materials: See table I, alloys in accordance with SAE-AS4841.

TABLE I. Material and nut alloys.

| Nut AN818 | | |
|---|---|---|
| Designator | Material | Alloy |
| Blank | Steel | 4130 or 4140 |
| D 1/ | Aluminum | 2014-T6 or 2024-T6 or T851 |
| J | CRES | 304 |
| K | CRES | 316 |
| T 2/ | Titanium | 6AI-4V |
| W | Aluminum | 7075-T73 |
| Z 3/ | Steel | 4130 or 4140 |

1/ Inactive for new design.
2/ Titanium shall not be used in oxygen systems.
3/ Zinc plate in accordance with ASTM B633; type II or III, Fe/Zn 5, or ASTM B695, type II, class 5.

Finish: Unless otherwise specified finishes shall be accordance with SAE-AS4841.

When specified dry film lubricant in accordance with MIL-PRF-46010 on all internal surfaces. Applicable only to material designators J or K. Over spray on C dimension is permitted, see figure 1.

PIN:

AN 818 - 8 J N

- N — Dry film applicable to material J and K only.
- J — Material code “J” for CRES 304 (see table I).
- 8 — Assembly size (see figure 1)
  Pre-fix L - drilled for lockwire
- 818 — Specification sheet number
- AN — AN prefix

PIN Examples:

AN818-8W identifies a nut assembly .500 inch (tube), without lock wire holes, aluminum (7075-T73).
AN818-L8K identifies a nut assembly .500 inch (tube), drilled for lockwire, CRES (316).
AN818-L8JN identifies a nut assembly .500 inch (tube), with lock wire holes, CRES (304), coated internally with solid film lubricant (J and K materials only).

Supersession data: Aluminum alloys 2014 and 2024 “D” designator is inactive for new design. For new design use aluminum alloy 7075 “W” designator to improve stress corrosion resistance and tensile strength.

Amendment notations. The margins of this specification are marked with vertical lines to indicate modifications generated by this amendment. This was done as a convenience only and the Government assumes no liability whatsoever for any inaccuracies in these notations. Bidders and contractors are cautioned to evaluate the requirements of this document based on the entire content irrespective of the marginal notations.

Referenced documents. In addition to SAE-AS4841, this document references the following:

MIL-PRF-46010
ASTM B633
ASTM B695
SAE-AS1043
SAE-AS8879

CONCLUDING MATERIAL

Custodians:
Army - AV
Navy - AS
Air Force - 99
DLA - CC

Review activities:
Army - CR4
Air Force - 71

Preparing activity:

DLA - CC

(Project 4730-2014-077)

NOTE: The activities listed above were interested in this document as of the date of this document. Since organizations and responsibilities can change, you should verify the currency of the information above using the ASSIST Online database at https://assist.dla.mil.