INCH-POUND

AN774 Rev 8
19 July 2011
SUPERSEDING
AN774 Rev 7
4 August 1983

DETAIL SPECIFICATION SHEET

BOLT - FLARED TUBE FITTING END UNIVERSAL

Reinstated after 19 July 2011. Inactive for new design.
For new design, use SAE-AS5160.

This specification is approved for use by all Departments and Agencies of the Department of Defense.

The requirements for acquiring the product described herein shall consist of this specification sheet and SAE-AS4841.

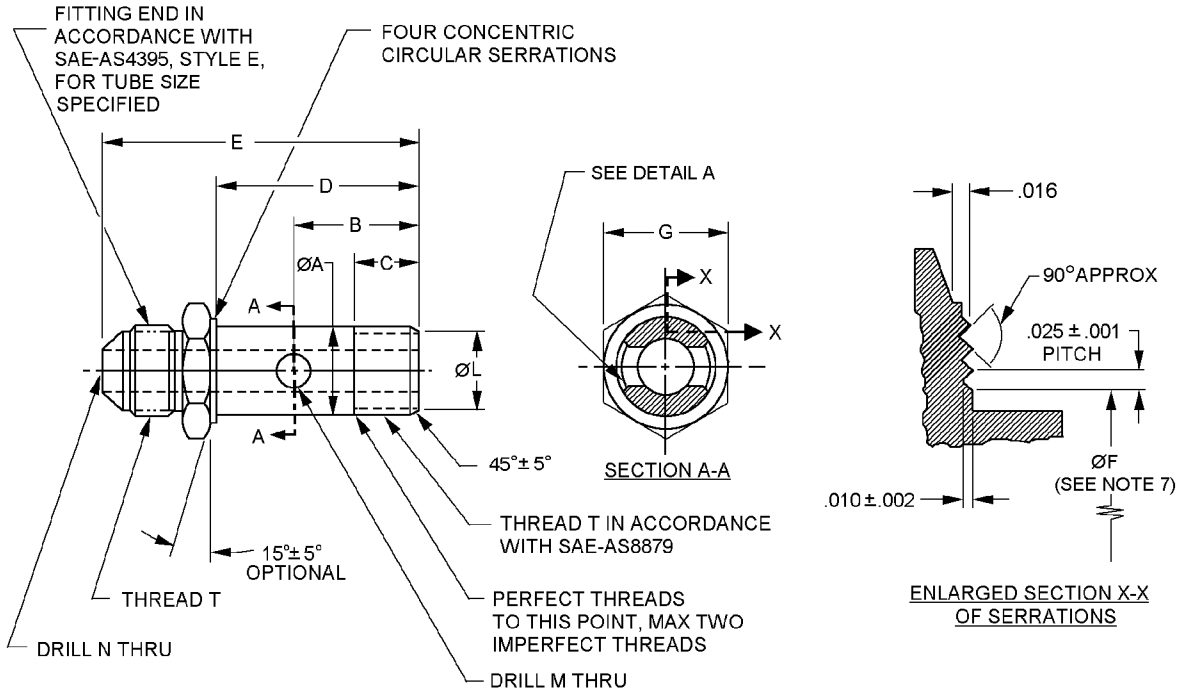

Inches	mm
.002	0.05
.005	0.13
.010	0.25
.016	0.41
.025	0.64

FIGURE 1. Bolt - flared tube dimensions and configurations.

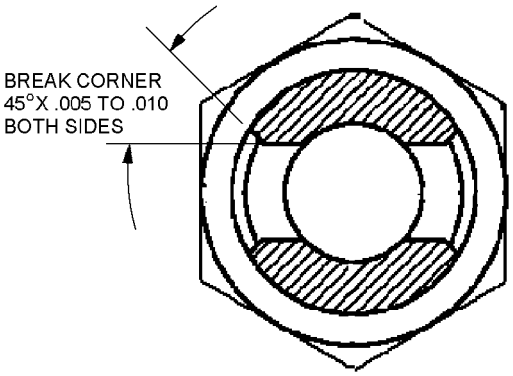

DETAIL A

Dash number	Tubing OD inches (mm)	Thread T (Ref) SAE-AS8879	A Dia. +.000 -.004 (0.10) inches (mm)	B ±.010 (0.25) inches (mm)	C ±.015 (0.38) inches (mm)
-4	.250 (6.35)	.4375-20UNJF-3A	.435 (11.05)	.781 (19.84)	.438 (11.13)
-5	.313 (7.95)	.5000-20UNJF-3A	.498 (12.65)	.781 (19.84)	.438 (11.13)
-6	.375 (9.53)	.5625-18UNJF-3A	.560 (14.22)	.875 (22.23)	.469 (11.91)
-8	.500 (12.70)	.750-16UNJF-3A	.748 (19.00)	1.094 (27.79)	.563 (14.30)
-10	.625 (15.88)	.8750-14UNJF-3A	.873 (22.17)	1.250 (31.75)	.594 (15.09)
-12	.750 (19.05)	1.0625-12UNJ-3A	1.060 (26.92)	1.468 (37.29)	.656 (16.66)
-16	1.000 (25.40)	1.3125-12UNJ-3A	1.310 (33.27)	1.687 (42.85)	.656 (16.66)

Dash number	D ±.015 (0.38) inches (mm)	E ±.015 (.038) inches (mm)	F Dia. +010 (0.25) -.000 (see note 7) inches (mm)	G Hex (ref) (see note 5) inches (mm)	L Dia. .015 (0.38) inches (mm)
-4	1.188 (30.18)	1.922 (48.82)	.469 (11.91)	.688 (17.48)	.344 (8.74)
-5	1.188 (30.18)	1.922 (48.82)	.531 (13.49)	.750 (19.05)	.406 (10.31)
-6	1.344 (34.14)	2.125 (53.98)	.594 (15.09)	.813 (20.65)	.469 (11.91)
-8	1.688 (42.88)	2.594 (65.89)	.781 (19.84)	1.000 (25.40)	.625 (15.88)
-10	1.969(50.01)	3.000 (76.20)	.906 (23.01)	1.125 (28.58)	.750 (19.05)
-12	2.313 (58.75)	3.484 (88.49)	1.094 (27.79)	1.375 (34.93)	.938 (23.83)
-16	2.813 (71.45)	4.094 (103.99)	1.344 (34.14)	1.625 (41.28)	1.188 (30.18)

FIGURE 1. Bolt - flared tube dimensions and configurations - Continued.

Dash number	M Dia. .015 (0.38) inches (mm)	N Dia. (ref) (see note 5) inches (mm)
-4	.188 (4.78)	.172 (4.37)
-5	.219 (5.56)	.234 (5.94)
-6	.250 (6.35)	.297 (7.54)
-8	.313 (7.95)	.391 (9.93)
-10	.375 (9.53)	.484 (12.29)
-12	.438 (11.13)	.609 (15.47)
-16	.625 (15.88)	.844 (21.44)

NOTES:
1. Dimensions are in inches.
2. Metric equivalents are given for information only.
3. Break sharp edges .and remove all hanging burrs and slivers.
4. Unless otherwise noted tolerances shall be ±.005 inches (0.13 mm) and angles ±.5°.
5 Tolerances for dimensions G and N are in accordance with SAE-AS4395 style E.
6. Machined surfaces shall be smooth to 125µin Ra, hex surfaces may be 250µin Ra, unless otherwise specified on the figures. Surface finish shall be in accordance with ASME B46.1.
7. Diameter F is last pitch diameter of last serration from point to point.
8. For design features purposes, this standard takes precedence over documents referenced herein.
9. Referenced documents shall be of the issue in effect on date of invitation for bid.

FIGURE 1. Bolt - flared tube dimensions and configurations - Continued.

REQUIREMENTS:

Dimensions and configuration shall be in accordance with figure 1.

Size -2 through -12 aluminum alloy, steel, corrosion resistant steel (CRES), and titanium maximum operating pressure is 3000 psi (21 MPa). Larger sizes maximum operating pressure is 1500 psi (10 MPa).

Except as otherwise noted materials shall be in accordance with SAE-AS4841, see table I for material code.

TABLE I. Material and code letters.

Code letter	Material
F	Steel alloy 4120 or 4130 In accordance with SAE-AMS6370 or SAE-AMS6382 1/
J	CRES, type 304
K	CRES, type 316
R	CRES, type 321
S	CRES, type 347, cond A
T	Titanium alloy 2/
W	Aluminum alloy 7075-T73

1/ Steel alloy 125,000 psi (860 MPa) minimum tensile strength.
2/ Not for use in oxygen systems.

Finishes shall be in accordance with SAE-AS4841.

Part or Identifying Number (PIN): The PIN consists of the letter “AN” the specification sheet number, a letter designator for material type and a dash number for tube size. Unassigned PIN’s shall not be used.

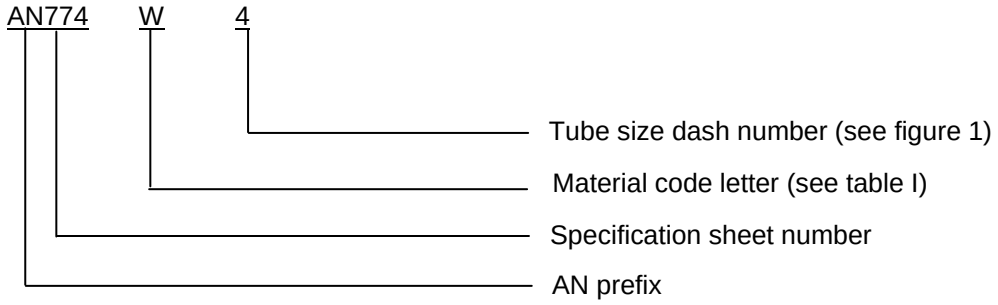

PIN example: AN774W4 indicates a bolt - flared tube, aluminum alloy 7075-T73, .250 inch (6.35 mm) tube.

Supersession data:

Due to stress corrosion cracking aluminum alloys 2014 and 2024 “D” designator has been replaced by aluminum alloy 7075 “W” designator example: AN774-D4 use AN774-W4.

Steel dash (-) designator has been replaced by steel alloy “F” designator.

CRES 347 “S” designator had been replaced by the CRES (alloy 321) “R” designator.

Table II provides a detailed cross-reference of inactive AN774 PINs and replacement SAE-AS5160 PINs. Users are cautioned to evaluate replacements for their particular application.

CAUTION: The superseding information is valid as of the date of this specification and may be superseded by subsequent revisions of the superseding document.

TABLE II. Cross-reference data.

AN PIN (inactive part)	Thread	Replacement AS PIN (for new design part)	Replacement AN PIN (inactive part)
AN774-4	.4375	AS5160-04	AN774F4
AN774D4	.4375	AS5160W04	AN774W4
AN774J4	.4375	AS5160J04	
AN774K4	.4375	AS5160K04	
AN774R4	.4375	AS5160R04	
AN774S4	.4375	AS5160R04	AN774R4
AN774T4	.4375	AS5160T04	
AN774W4	.4375	AS5160W04	
AN774-5	.2500	AS5160-05	AN774F5
AN774D5	.2500	AS5160W05	AN774W5
AN774J5	.2500	AS5160J05	
AN774K5	.2500	AS5160K05	
AN774R5	.2500	AS5160R05	
AN774S5	.2500	AS5160R05	AN774R5
AN774T5	.2500	AS5160T05	
AN774W5	.2500	AS5160W05	
AN774-6	.5000	AS5160-06	AN774F6
AN774D6	. 5000	AS5160W06	AN774W6
AN774J6	. 5000	AS5160J06	
AN774K6	. 5000	AS5160K06	
AN774R6	. 5000	AS5160R06	
AN774S6	. 5000	AS5160R06	AN774R6
AN774T6	. 5000	AS5160T06	
AN774W6	. 5000	AS5160W06	
AN774-8	.5625	AS5160-08	AN774F8
AN774D8	.5625	AS5160W08	AN774W8
AN774J8	.5625	AS5160J08	
AN774K8	.5625	AS5160K08	
AN774R8	.5625	AS5160R08	
AN774S8	.5625	AS5160R08	AN774R8
AN774T8	.5625	AS5160T08	
AN774W8	.5625	AS5160W08	

TABLE II. Cross-reference data - Continued.

AN PIN (inactive part)	Thread	Replacement AS PIN (for new design part)	Replacement AN PIN (inactive part)
AN774-10	.7500	AS5160-16	AN774F10
AN774D10	.7500	AS5160W16	AN774W10
AN774J10	.7500	AS5160J16	
AN774K10	.7500	AS5160K16	
AN774R10	.7500	AS5160R16	
AN774S10	.7500	AS5160R16	AN774R10
AN774T10	.7500	AS5160T16	
AN774W10	.7500	AS5160W16	
AN774-12	.8750	AS5160-12	AN774F12
AN774D12	.8750	AS5160W12	AN774W12
AN774J12	.8750	AS5160J12	
AN774K12	.8750	AS5160K12	
AN774R12	.8750	AS5160R12	
AN774S12	.8750	AS5160R12	AN774R12
AN774T12	.8750	AS5160T12	
AN774W12	.8750	AS5160W12	
AN774-16	1.3125	AS5160-16	AN774F16
AN774D16	1.3125	AS5160W16	AN774W16
AN774J16	1.3125	AS5160J16	
AN774K16	1.3125	AS5160K16	
AN774R16	1.3125	AS5160R16	
AN774S16	1.3125	AS5160R16	AN774R16
AN774T16	1.3125	AS5160T16	
AN774W16W	1.3125	AS5160W16	

Changes from previous issues. Marginal notations are not used in this revision to identify changes with respect to the previous issue due to the extent of the changes.

Referenced documents. In addition to SAE-AS4841, this document references the following:

ASME B46.1
SAE-AMS6370
SAE-AMS6382
SAE-AS4395
SAE-AS5160
SAE-AS8879

CONCLUDING MATERIAL

Custodians:
Army - AV
Navy - AS
Air Force - 99
DLA - CC

Review activities:
Navy - SH
Air Force - 71

Preparing activity:
DLA - CC

(Project 4730-2011-071)

NOTE: The activities listed above were interested in this document as of the date of this document. Since organizations and responsibilities can change, you should verify the currency of the information above using the ASSIST Online database at https://assist.daps.dla.mil.