INCH POUND

MIL-DTL-9177C
24 February 2014
SUPERSEDING
MIL-C-9177B(USAF)
30 April 1981

DETAIL SPECIFICATION

CONNECTOR, AUDIO, AIRBORNE, GENERAL SPECIFICATION FOR

This specification is approved for use by all Departments and Agencies of the Department of Defense.

1. SCOPE

1.1 Scope. This specification covers the general requirements for airborne audio connectors for use in electrical and electronic equipment. Electrical, mechanical, and environmental features of these connectors include environmental resisting, RFI/EMI protection, low-level circuit capabilities, and high-cross talk resistance.

2. APPLICABLE DOCUMENTS

2.1 General. The documents listed in this section are specified in section 3, 4, or 5 of this specification. This section does not include documents cited in other sections of this specification or recommended for additional information or as examples. While every effort has been made to ensure the completeness of this list, document users are cautioned that they must meet all specified requirements of documents cited in 3, 4, or 5 of this specification, whether or not they are listed.

2.2 Government documents.

2.2.1 Specifications, standards, and handbooks. The following specifications, standards, and handbooks form a part of this document to the extent specified herein. Unless otherwise specified, the issues of these documents are those cited in the solicitation or contract.

FEDERAL STANDARD

FED-STD-H28 - Screw-Thread Standards for Federal Services.

(Copies of specifications, standards, drawings, and publications required by contractors in connection with specific procurement functions should be obtained from the procuring activity or as directed by the contracting officer.)

Comments, suggestions, or questions on this document should be addressed to: DLA land and Maritime, Attn: VAI, P.O. Box 3990, Columbus, Ohio, 43218-3990 or emailed to: Sound@dla.mil. Since contact information can change, you may want to verify the currency of this address information using the ASSIST Online database at https://assist.dla.mil.

AMSC N/A FSC 5935

DEPARTMENT OF DEFENSE SPECIFICATIONS

MIL-W-76	- Wire and Cable, Hookup, Electrical, Insulated.
MIL-DTL-5898	- Cords, Electrical.
MIL-DTL-55330	- Connectors, Electrical and Fiber Optic.
MIL-DTL-9177/1	- Connector, Audio, Airborne, Plug, 4 Contact.
MIL-DTL-9177/2	- Connector, Audio, Airborne, Plug, Miniature, 4 Contact.
MIL-DTL-9177/3	- Connector, Audio, Airborne, Jack, Cable, 4 Contact.
MIL-DTL-9177/4	- Connector, Audio, Airborne, Jack, Panel Mount, 4 Contact.
MIL-DTL-9177/5	- Connector, Audio, Airborne, Jack, Switch, 4 Contact.

DEPARTMENT OF DEFENSE STANDARDS

MIL-STD-202	- Test Methods for Electronic and Electrical Component Parts.
MIL-STD-1285	- Marking of Electrical and Electronic Parts.
MIL-STD-1916	- DoD Preferred Methods for Acceptance of Product.

(Copies of these documents are available online at http://quicksearch.dla.mil.)

2.3 Non-Government publications. The following documents from a part of this document to the extent specified herein. Unless otherwise specified, the issues of these documents are those cited in the solicitation or contract.

INTERNATIONAL ORGANIZTION FOR STANDARDIZATION (ISO)

ISO 17025	- General requirements for the competence of testing and calibration laboratories, Test methods for hydraulic fluid power connections.

(Copies of these documents are available online at http://www.iso.ch ro from the International Organization for Standardization American National Standards Institute, 11 West 42nd Street, 13th Floor, New York, NY 10036.)

NCSL INTERNATIONAL

NCSL Z540.3	- Requirements for the Calibration of Measuring and Test Equipment.

(Copies of these documents are available online at http://www.ncsli.org or from NCSL International 2995 Winderness Place, Suite 107, Boulder, Colorado 80301-5404)

SAE INTERNATIONAL

SAE-AS22520	- Crimping Tools, Wire Termination.

(Copies of these documents are available on line at www.sae.org from SAE International, 400 Commonwealth Drive, Warrendale, PA 15096-0001, and Tel: 877-606-7323 [inside USA and Canada] or 724-776-4970 [outside USA], email at CustomerService@sae.org.)

2.4 Order of precedence. Unless otherwise noted herein or in the contract, in the event of a conflict between the text of this document and the references cited herein, the text of this document takes precedence. Nothing in this document, however, supersedes applicable laws and regulations unless a specific exemption has been obtained.

3. REQUIREMENTS

3.1 Specification sheets. The individual item requirements shall be as specified herein and in accordance with the applicable specification sheet. In the event of any conflict between the requirements of this specification and the specification sheet, the latter shall govern.

3.2 Classification of requirements. The requirements for the connectors are classified herein as follows:

Requirement	Paragraph
Qualification	3.3
Materials	3.4
Design and construction	3.5
Performance	3.6

3.3 Qualification. Connectors furnished under this specification shall be products that are manufactured by a manufacturer authorized by the qualifying activity for listing on the applicable qualified manufacturers list before contract award (see 4.4 and 6.4).

3.4 Materials (see 4.6.1). The materials shall be as specified herein (see 3.1), when a definite material is not specified, a material shall be used which will enable the connector to meet the performance requirements of this specification. Materials used in the construction of these connectors shall be fungus inert. Acceptance or approval of any constituent material shall not be construed as a guaranty of the acceptance of the finished product.

3.4.1 Shells. Unless otherwise specified (see 3.1), shells shall be plastic or optional materials shown on the applicable specification sheet.

3.4.2 Metal parts. All metal parts shall be of corrosion-resistant material or shall be plated to resist corrosion, to permit compliance with the salt spray requirements of 3.6.12.

3.4.3 Springs. Contact springs shall be nickel-silver or copper alloy. Copper alloy springs shall be suitably plated to prevent corrosion of the base metal.

3.4.4 Insulating material. The insulating material between the contact of the connector shall be of such quality and workmanship that it does not chip, crack, or deteriorate under service conditions encountered in military usage. The heat resulting from soldering a conductor to or unsoldering a conductor from the contact terminals shall not cause a reduction in contact-spring pressure, deterioration of insulation material, or loosening of any other connections that were made during the fabrication of the connector (see 6.1.1).

3.5 Design and construction (see 4.6.1).

3.5.1 Connectors. Connectors shall be of the design and construction specified (see 3.1).

3.5.2 Screw threads. Screw threads on removable or replaceable threaded parts shall be in accordance with FED-STD-H28.

3.5.3 Solder terminals. The solder terminal for each contact shall be tinned and so shaped and located that a mechanical connection can be conveniently made with the stranded conductor of electrical cord WF-14/U in accordance with MIL-DTL-5898 before the solder connection is made. The exposed parts of the terminals shall be hot-tie-dipped or hot-solder-dipped to facilitate soldering. Care shall be taken that the terminal lug holes are not closed by the solder. When solder-dipping is employed, only noncorrosive fluxes shall be used. The size of each terminal shall be such as to accommodate two conductors of electrical cord WF-14/U in accordance with MIL-DTL-5898. Bright tin plate over nickel plate on contact springs may be used in lieu of hot-tin-dip of terminal ends of contact springs. Between each contact and its corresponding terminal, there shall be no connections depending solely on the mechanical pressure between metal parts for electrical continuity. There shall be no connections depending upon soft solder for mechanical strength.

3.5.4 Contact mating position. When jack and plug are mated the No. 1 jack contact shall engage the No. 1 plug contact groove in such a manner as to maintain contact between the reference plane surfaces of plug and jack (see 3.1). The points of contact between contact No. 2 and contact No. 3 of the plug and their corresponding jack contacts shall be within 0.022 inch (0.56 mm) of the plug contact corresponding jack contact shall be no closer than 0.032 inch (0.81 mm) from the insulation between plug contacts No. 3 and No. 4.

3.5.5 Crimp sleeve (when specified, see 3.1). Each connector shall include a crimp sleeve which is compatible with SAE-AS22520 crimping tools for anchoring the specified electrical cable to the frame of the jack. Anchoring shall prevent twisting, outward movement, and inward movement of the cable. The cable retaining mechanism shall not interfere with the dressing of the conductors. Cabling instructions including applicable SAE-AS22520 tool part numbers shall be included and shall be packaged with each connector.

3.5.6 Spring attachment clip (when specified, see 3.1). The spring attachment clip shall enable the user to attach the connector to his clothing or parachute harness. The spring clip assembly shall open and close without binding, and the clip teeth shall mate. The teeth of the clip shall be dulled so that they do not puncture or damage the clothing or parachute harness.

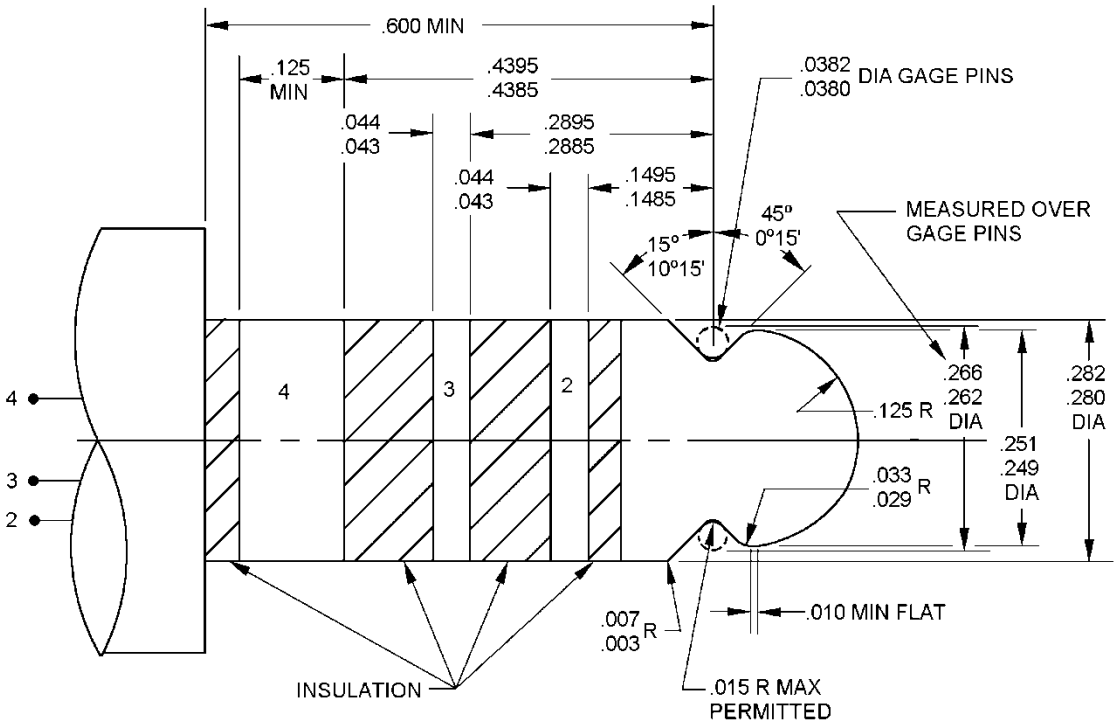

Inches	mm	Inches	mm
.003	.08	.1495	3.797
.007	.18	.249	6.32
.010	.25	.251	6.38
.015	.38	.262	6.65
.029	.74	.266	6.76
.033	.84	.280	7.11
.0380	.965	.282	7.16
.0382	.970	.2885	7.328
.043	1.09	.2895	7.353
.044	1.12	.4385	11.138
.125	3.18	.4395	11.163
.1485	3.772	.600	15.24

FIGURE 1. Contact mating position test plug.

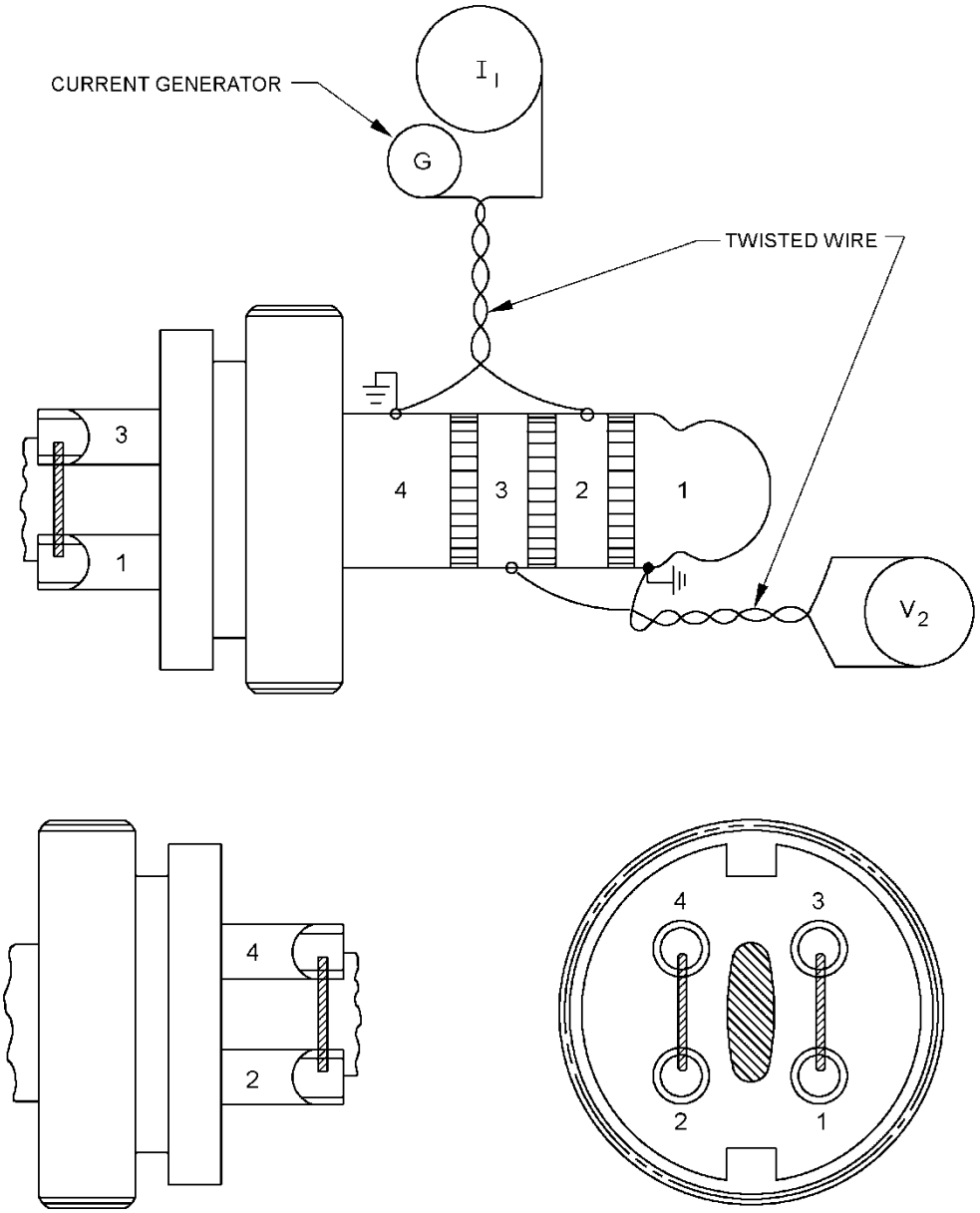

FIGURE 2. Test circuit, plug M9177/1 (short-circuit) electromagnetic coupling.

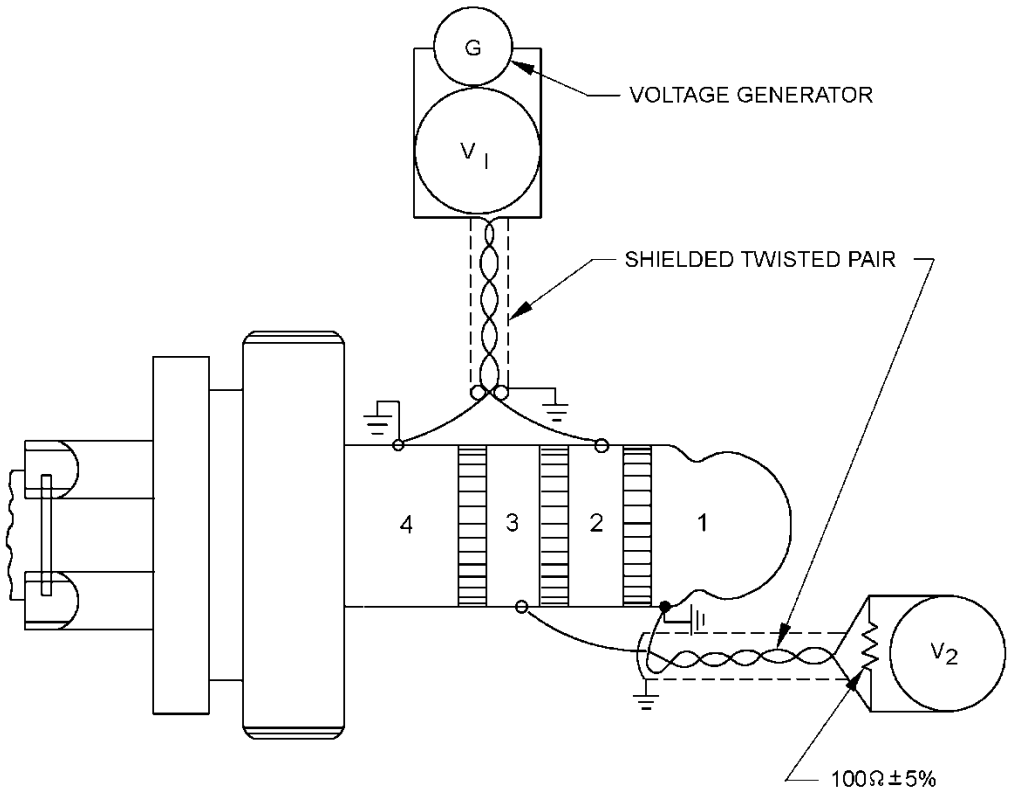

FIGURE 3. Test circuit, plug M9177/1 (open-circuit) dielectric coupling.

3.5.7 Anti-rotation detents (when specified, see 3.1). Shell halves shall be so designed as to prevent rotation of jack contact insert and switch.

3.6 Performance.

3.6.1 Contact mating (when specified, see 3.1) (see figure 1). When connectors are tested as specified in 4.6.2, there shall be no discontinuity.

3.6.2 Contact resistance. When connectors are tested as specified in 4.6.3, the contact resistance shall not exceed 0.02 ohm, except following the salt spray test, the contact resistance shall not exceed 0.10 ohm.

3.6.3 Insulation resistance. When connectors are tested as specified in 4.6.4, the insulation resistance shall be 1.000 megohms or greater, and 100 megohms or greater after the moisture resistance test (see 4.6.10).

3.6.4 Dielectric withstanding voltage. When tested as specified in 4.6.5, connectors shall withstand a minimum of 500 volts root mean square (rms) without dielectric breakdown or flashover.

3.6.5 Insertion and withdrawal forces. When connectors are tested as specified in 4.6.6, the insertion and withdrawal forces shall be as specified (see 3.1).

3.6.6 Electromagnetic coupling (when specified) (see figure 2). When tested as specified in 4.6.7, the voltages induced into the voltmeter shall not exceed the values listed below.

Frequency (Hz) +5Δ	Voltage (mV)
200	0.020
1,000	0.07
5,000	0.35
10,000	0.70

3.6.7 Dielectric coupling (when specified, see 3.1) (see figure 3). When tested in accordance with 4.6.8, the voltages induced into voltmeter (V2) shall not exceed the values listed below.

Frequency (Hz) +5Δ	Voltage (V2) (mV)
200	0.020
1,000	0.10
5,000	0.50
10,000	1.0

3.6.8 Thermal shock. When connectors are tested as specified in 4.6.9, the insulation shall not be cracked, warped, or delaminated; all marking shall remain legible; and it shall be possible to remove and replace screw-on shells (where used) (see 3.1) without the use of tools other than a screwdriver.

3.6.9 Moisture resistance. When connectors are tested as specified in 4.6.10, the initial insulation resistance shall be as specified in 3.6.3. Following step 6 of the final cycle, the insulation resistance shall be not less than 1 megohm. Following the drying period, the contact resistance, insulation resistance, and dielectric withstanding voltage shall be as specified in 3.6.2, 3.6.3, and 3.6.4, respectively; the insulation shall not be cracked, warped, or delaminated; there shall be no excessive corrosion (see 3.6.12) of metal parts; all marking shall remain legible; and it shall be possible to remove and replace screw-on shells (where used) (see 3.1) without the use of tools other than a screwdriver.

3.6.10 Vibration. When connectors are tested as specified in 4.6.11, there shall be no damage or loosening of parts, loss of electrical continuity for more than a period of 1 microsecond with a current of 100 milliamperes dc, and the mating connector shall not separate from the test connector and the contact resistance shall be as specified in 3.6.2.

3.6.11 Shock (specified pulse). When connectors are tested as specified in 4.6.12, there shall be no visual evidence of mechanical damage, rupture of dielectric materials, loss of electrical continuity for more than period of 3 microsecond with a current of 100 milliamperes dc, or loosening of parts.

3.6.12 Salt spray (corrosion). When connectors are tested as specified in 4.6.13, there shall be no excessive corrosion of metal parts; the insulation shall not be cracked, warped, or delaminated; and the contact resistance shall be as specified in 3.6.2. Excessive corrosion shall be construed as any corrosion which interferes with electrical performance, or, in the case of plated metals, when the corrosive action has passed through the plating and attacked the base metal or underplate. Exposed screw threads may be protected with a suitable coating.

3.6.13 Torque (when specified, see 3.1). When connectors are tested as specified in 4.6.14, torque applied between the separate metal parts of the connector finger shall cause no damage to, or loosening of, any parts thereof.

3.6.14 Controlled drop (when specified, see 3.1). When tested in accordance with 4.6.15, there shall be no damage or loosening of parts affecting performance. Local abrasion or indentation of surfaces due to load application shall not be considered damage affecting performance. Contact resistance and dielectric withstanding voltage shall be as specified in 3.6.2 and 3.6.4.

3.6.15 Stack assembly (when specified, see 3.1). When tested in accordance with 4.6.16, there shall be no damage or loosening of parts affecting performance. Local abrasion or indentation of surfaces due to load application shall not be considered damage affecting performance. Contact resistance and dielectric withstanding voltage shall be as specified in 3.6.2 and 3.6.4.

3.6.16 Static load (when specified, see 3.1). When tested in accordance with 4.6.17, there shall be no visual evidence of mechanical damage, rupture of dielectric materials, or loosening of parts. Local abrasion or indentation of surfaces due to load application shall be considered permissible damage.

3.6.17 Shell impact. When tested in accordance with 4.6.18, there shall be no visual evidence of mechanical damage, rupture of dielectric materials, and dielectric withstanding voltage shall be as specified in 3.6.4. Local abrasion or indentation of surfaces due to load application shall be considered permissible damage.

3.6.18 Contact spring pressure (when specified, see 3.1).

3.6.18.1 Mated connectors. When tested in accordance with 4.6.19.1, the force required to lift each contact spring sufficiently to break electrical contact with the mating connector shall be 16 ounces minimum.

3.6.18.2 Unmated connectors. When tested in accordance with 4.6.19.2, each contact spring of the test connector shall be deflected by an amount not more than 0.015 (0.38 mm).

3.6.19 Spring life (when specified, see 3.1). When connectors are tested as specified in 4.6.20, there shall be no damage or loosening of parts, and the contact resistance, dielectric withstanding voltage, and insertion and withdrawal forces shall be as specified in 3.6.2, 3.6.4, and 3.6.5.

3.6.20 Frame strength (when specified, see 3.1). When connectors are tested as specified in 4.6.21, there shall be no rupture of joints.

3.6.21 Spring attachment clip life (when specified, see 3.1). When tested in accordance with 4.6.22, the force needed to begin separation of the clip jaws, after cycling, shall be greater than 80 percent of the force needed to begin separation of the clip jaws prior to testing. The clip separation force prior to cycling shall be as specified (see 3.1).

3.6.22 Cable retention (when specified, see 3.1). When tested in accordance with 4.6.23, there shall be no evidence of mechanical failure, individual cord conductor shall not become taut between contact terminals and cord crimping area, and cord conductors within the connector shall neither be short circuited nor broken.

3.6.22.1. Anti-rotation detents (when specified, see 3.1). When tested in accordance with 4.6.23.1, the jack contact insert shall not rotate within the shell halves nor shall there be failure of the cable attachment means.

3.6.22.2 RFI shielding (when specified, see 3.1). When tested as specified in 4.6.24, the RFI shielding capabilities of mated connectors shall not be less than the tabulated values at the specified frequencies.

Frequency (MHz)	Leakage attenuation (dB)
100	55
200	50
300	45
400	45
800	35
1,000	35

3.7 Marking (see 4.6.1). Connectors shall be marked in accordance with method I of MIL-STD-1285, and shall include the manufacturer's name, trademark, or source code and the part number (see 3.1).

3.8 Recycled, recovered, environmentally preferable, or biobased materials. Recycled, recovered, environmentally preferable, or biobased materials should be used to the maximum extent possible, provided that the material meets or exceeds the operational and maintenance requirements, and promotes economically advantageous life cycle costs.

3.9 Workmanship (see 4.6.1). Connectors shall be processed in such a manner as to be uniform in quality and shall be free from defects that will affect life, serviceability, and appearance. There shall be no evidence of loose contacts; poor or improper molding or fabrication; damaged or improperly assembled contacts; peeling, flaking, or chipping of plating or finish; mechanical damage due to testing environment; nicks or burrs of metal parts or surfaces; improper or incorrect marking; or improper tinning of solder cups, terminals, pins, or contacts.

4. VERIFICATION

4.1 Test equipment and inspection facilities. Test and measuring equipment and inspection facilities of sufficient accuracy, quality, and quantity to permit performance of the required inspection shall be established and maintained or identified by the contractor. The establishment and maintenance of a calibration system to control the accuracy of the measuring and test equipment shall be in accordance with ISO 17025 and NCSL Z540.3 as applicable.

4.1.1 Classification of inspections. The inspections specified herein are classified as follows:

a. Qualification inspection (see 4.4).
b. Quality conformance inspection (see 4.5).

4.2 Inspection conditions. Unless otherwise specified herein, all inspections shall be performed in accordance with the test conditions specified in the "GENERAL REQUIREMENTS" of MIL-STD-202.

4.3 Mating connectors. Mating connectors used for inspection shall have been listed on, or approved for listing on, the applicable qualified products list.

4.4 Qualification inspection. Qualification inspection shall be performed at a laboratory acceptable to the Government (see 6.4) on sample units produced with equipment and procedures normally used in production.

4.4.1 Sample size. Fourteen connectors of each type shall be subjected to qualification inspection.

4.4.2 Inspection routine. The sample shall be subjected to the inspections specified in table I, in the order shown. All sample units shall be subjected to the inspections of group 1. The sample shall then be divided into three groups, six units for group II, six units for group III, and two units for group IV.

4.4.3 Failures. One or more failures shall be cause for refusal to grant qualification approval.

4.4.4 Retention of qualification. To retain qualification, the contractor shall forward a report to the qualifying activity at the end of 24 months. The qualifying activity shall establish the initial reporting date. Subsequent reporting periods will be 36 months each. The report shall consist of:

a. A summary of the results of the tests performed for inspection of product for delivery groups A and B, indicating as a minimum the number of lots that have passed and the number that have failed. The results of tests of all reworked lots shall be identified and accounted for.
b. A summary of the results of tests performed for periodic inspection, group C, including the number and mode of failures. The summary shall include results of all periodic inspection tests performed and completed during the 24- or 36-month period. If the summary of the test results indicates nonconformance with specification requirements, and corrective action acceptable to the qualifying activity has not been taken, action may be taken to remove the failing product from the qualified products list.

Failure to submit the report within 30 days after the end of each 24- or 36-month period may result in loss of qualification for a product. In addition to the periodic submission of inspection data, the contractor shall immediately notify the qualifying activity at any time during the 24- or 36-month period that the inspection data indicates failure of the qualified product to meet the requirements of this specification. In the event that no production occurred during the reporting period, a report shall be submitted certifying that the company still has the capabilities and facilities necessary to produce the item. If during two consecutive reporting periods there has been no production, the manufacturer may be required, at the discretion of the qualifying activity, to submit a representative product of each type to testing in accordance with the qualification inspection requirements.

4.4.5 Extension of qualification. Connectors of the same type shall be qualified for any permissible color other than that tested during qualification inspection, provided that the material and design and construction used are identical.

4.4.6 Group qualification. Group qualification shall be as specified (see 3.1).

4.5 Quality conformance inspection.

4.5.1 Inspection of product for delivery. Inspection of product for delivery shall consist of groups A and B inspections.

4.5.1.1 Inspection lot. An inspection lot shall consist of all connectors of the same basic type produced under essentially the same conditions, and offered for inspection at one time. An inspection lot may include connectors of the same basic type having shells of different colors, provided that the connectors are otherwise mechanically and dimensionally identical.

TABLE I. Qualification inspection.

Inspection	Requirement paragraph	Test method paragraph
Group I (14 sample units)		
Visual and mechanical inspection 1/	3.1, 3.4, 3.5, 3.7, 3.8	4.6.1
Contact mating	3.6.1	4.6.2
Contact resistance	3.6.2	4.6.3
Insulation resistance	3.6.3	4.6.4
Dielectric withstanding voltage	3.6.4	4.6.5
Insertion and withdrawal forces	3.6.5	4.6.6
Electromagnetic coupling (when specified)	3.6.6	4.6.7
Dielectric coupling (when specified)	3.6.7	4.6.8
Group II (6 sample units)		
Thermal shock	3.6.8	4.6.9
Moisture resistance	3.6.9	4.6.10
Vibration	3.6.10	4.6.11
Shock (specified pulse)	3.6.11	4.6.12
Insulation resistance	3.6.3	4.6.4
Dielectric withstanding voltage	3.6.4	4.6.5
Salt spray (corrosion)	3.6.12	4.6.13
Torque (when specified)	3.6.13	4.6.14
Controlled drop (when specified)	3.6.14	4.6.15
Stack assembly (when specified)	3.6.15	4.6.16
Static load (when specified)	3.6.16	4.6.17
Shell impact	3.6.17	4.6.18
Group III (6 sample units)		
Thermal shock	3.6.8	4.6.9
Contact spring pressure (when specified)	3.6.18	4.6.19
Spring life (when specified)	3.6.19	4.6.20
Frame strength (when specified)	3.6.20	4.6.21
Spring attachment clip life (when specified)	3.6.21	4.6.22
Cable retention (when specified)	3.6.22	4.6.23
Ant-rotation detents (when specified)	3.6.22.1	4.6.23.1
Group IV (2 sample units)		
RFI shielding (when specified)	3.6.22.2	4.6.24

1/ Marking will be considered defective only if it is illegible at the completion of the required tests.

4.5.1.2 Group A inspection. Group A inspection shall consist of visual and mechanical inspection (see 4.6.1).

4.5.1.2.1 Rejected lots (group A inspection). If an inspection lot is rejected, the contractor may rework it to correct the defects, or screen out the defective units, and resubmit for reinspection. Resubmitted lots shall be inspected using tightened inspection and shall not thereafter be tendered for acceptance unless the former rejection or requirement of correction is disclosed. Such lots shall be separate from new lots, and shall be clearly identified as reinspected lots.

4.5.1.3 Group B inspection. Group B inspection shall consist of the inspections specified in table II, in the order shown, and shall be made on sample units which have been subjected to and have passed the group A inspection.

TABLE II. Group B inspection.

Inspection	Requirement paragraph	Test method paragraph
Contact resistance	3.6.2	4.6.3
Insulation resistance	3.6.3	4.6.4
Dielectric withstanding voltage	3.6.4	4.6.5
Torque	3.6.13	4.6.14
Insertion and withdrawal forces	3.6.5	4.6.6

4.5.1.3.1 Sampling plan (group B inspection). The sampling plan shall be in accordance with MIL-STD-1916 for special inspection level S-4. The sample size shall be based on the inspection lot size from which the sample was selected for group A inspection. The AQL shall be 4.0 percent defective.

4.5.1.3.2 Rejected lots (group B inspection). If an inspection lot is rejected, the contractor may rework it to correct the defects, or screen out the defective units, and resubmit for reinspection. Resubmitted lots shall be inspected using tightened inspection and shall not thereafter be tendered for acceptance unless the former rejection or requirement of correction is disclosed. Such lots shall be separate from new lots, and shall be clearly identified as reinspected lots.

4.5.1.3.3 Disposition of sample units. Sample units which have passed all group B inspection may be delivered on the contract or purchase order if the lot is accepted and the sample units are still within specified electrical tolerances.

4.5.2 Periodic inspection. Periodic inspection shall consist of group C inspection. Except where the results of this inspection show noncompliance with the applicable requirements (see 4.5.2.1.4), delivery of products which have passed groups A and B inspections shall not be delayed pending the results of this periodic inspection.

4.5.2.1 Group C inspection. Group C inspection shall consist of the inspections specified in table III, in the order shown. Group C inspection shall be made on sample units selected from inspection lots which have passed the groups A and B inspections.

4.5.2.1.1 Sampling plan (group C inspection). Twelve sample units of each basic type shall be selected at random from items produced every 24- or 36-months, as applicable (see 4.4.4). The sample units shall be subdivided as specified for each subgroup in table III.

4.5.2.1.2 Failures. If any sample units fail to pass group C inspection, the entire sample shall be considered to have failed and if the contractor has been inspecting on a 36-month basis as permitted in 4.4.4, he shall revert to a 24-month testing basis. He can return to a 36-month inspection basis by meeting requirements of 4.5.2.1.1.

4.5.2.1.3 Disposition of sample units. Sample units which have been subjected to group C inspection shall not be delivered on the contract or purchase order.

4.5.2.1.4 Noncompliance. If a sample fails to pass group C inspection, the contractor shall take corrective action on the materials or processes, or both, as warranted, and on all units of product which can be corrected and which were manufactured under essentially the same conditions, with essentially the same materials, processes, etc., and which are considered subject to the same failure. Acceptance of the product shall be discontinued until corrective action, acceptable to the Government, has been taken. After the corrective action has been taken, group C inspection shall be repeated on additional sample units (all inspections, or the inspection which the original sample failed, at the option of the Government). Groups A and B inspections may be reinstituted; however, final acceptance shall be

withheld until group C reinspection has shown that the corrective action was successful. In the event of failure after reinspection, information concerning the failure and the corrective action taken shall be furnished to the cognizant inspection activity and the qualifying activity.

TABLE III. Group C inspection.

Inspection	Requirement paragraph	Test method paragraph
Subgroup 1 (6 specimens)		
Moisture resistance	3.6.9	4.6.10
Torque	3.6.13	4.6.14
Controlled drop	3.6.14	4.6.15
Shell impact	3.6.17	4.6.18
Static load	3.6.16	4.6.17
Subgroup 2 (6 specimens)		
Thermal shock	3.6.8	4.6.9
Vibration	3.6.10	4.6.11
Shock (specified pulse)	3.6.11	4.6.12
Salt spray	3.6.12	4.6.13
Torque	3.6.13	4.6.14
Frame strength	3.6.19	4.6.20
Spring attachment clip life	3.6.21	4.6.22

4.5.3 Inspection of packaging. Sample packages and packs and the inspection of the preservation, packing and marking for shipment and storage shall be in accordance with the requirements of MIL-DTL-55330.

4.6 Methods of inspection.

4.6.1 Visual and mechanical inspection (see 3.1, 3.4, 3.5, 3.7, and 3.8). Connectors shall be inspected to verify that the materials, screw threads, physical dimensions, marking, and workmanship are in accordance with the applicable requirements.

4.6.2 Contact mating (see 3.6.1). A test plug conforming to figure 1 is mated to the jack. Each jack shall be monitored for electrical continuity using a test current of 100 ± 2 milliamperes. Any discontinuity constitutes a failure.

4.6.3 Contact resistance (see 3.6.2). The test connector shall be mated to the approved mating connector six times before testing, to insure that the connector is clean. With the test connector mated to the approved mating connector, a direct current of 100 ± 2 milliamperes shall flow through the contacts under test. The contact resistance shall be measured between each test connector terminal and the corresponding mating connector terminal at the point of normal connection.

4.6.4 Insulation resistance (see 3.6.3). Connectors shall be tested in accordance with method 302, test condition B of MIL-STD-202, except electrification time shall not exceed 1 minute.

4.6.5 Dielectric withstanding voltage (see 3.6.4). Connectors shall be tested in accordance with method 301 of MIL-STD-202. The following details shall apply:

a. Magnitude of test voltage and nature of potential – 500 volts ac.
b. Duration of application – For qualification inspection, the test voltage shall be applied at a rate of 100 volts per second. For quality conformance inspection, the voltage may be applied instantaneously and shall be maintained for at least 5 seconds.
c. Points of application – Between mutually insulated terminals of the connector.

4.6.6 Insertion and withdrawal forces (see 3.6.5). The specified mating connector (see 3.1) conforming to the applicable specification sheet shall be used. The maximum force required to insert and withdraw the test connector shall be measured as follows:

a. The axis of the test connector shall be alined with the axis of the mating connector;
b. A straight thrust shall then be applied gradually in a direction along the axis of the test connector until it is completely inserted in the mating connector;
c. A straight pull shall then be applied gradually in a direction along the axis of the test connector until it is completely separated.

4.6.7 Electromagnetic coupling (see 3.6.6) (see figure 2). The specified mating connector (see 3.1) conforming to the applicable specification sheet shall be used. Terminals 1 and 3 of the mating connector shall be short circuited, terminals 2 and 4 of the mating connector shall also be short circuited. Terminals 2 and 4 of the test connector shall be connected to a current generator and an ammeter by using a twisted pair of conductors. Terminals 1 and 3 of the test connector shall be connected, by using a twisted pair of conductors, to a high-impedance electronic voltmeter such as Ballantine Model No. 300, or its equivalent. The two pairs of conductors shall be as short as possible and shall be so oriented that their axes are at right angles to each other. Terminals 1 and 4 shall be grounded. The current through the ammeter shall be set at 2.5 ± 0.1 amperes. With the current generator set at frequencies of 200, 1,000, 5,000, and 10,000 hertz, the voltages induced into the voltmeter shall not exceed those specified in 3.6.6. The ambient electrical noise level in the circuit with no signal shall be less than 0.01 millivolt.

4.6.8 Dielectric coupling (see 3.6.7) (see figure 3). The specified mating connector (see 3.1) conforming to the applicable specification sheet shall be used. Terminals 2 and 4 of the test connector shall be connected, by using a twisted pair of shielded conductors, to a voltage generator with a high-impedance electronic voltmeter, V1, such as Ballantine Model No. 300, or its equivalent, across the voltage generator. Terminals 1 of 3 of the test connector shall be connected, by using a twisted pair of shielded conductors, to a 100 ohm, 5 percent resistor with another high-impedance electronic voltmeter, V2, across the resistor. (The two pairs of conductors shall be kept as far away from each other as possible.) The cable shields, terminals 1 and 4 shall be grounded. The voltage across voltmeter V1 shall be 15 ± 0.1 volt. With the voltage generator set at frequencies of 200, 1,000, 5,000, and 10,000 hertz, the voltages induced into the voltmeter V2 shall not exceed those specified in 3.6.7. The ambient electrical noise level in the circuit with no signal shall be less than 0.01 millivolt.

4.6.9 Thermal shock (see 3.6.8). Connectors shall be tested in accordance with method 107 of MIL-STD-202. The following details shall apply:

a. The test connector shall be mated to the approved mating connector and shall remain mated throughout the test.
b. Measurements before and after test – None.
c. Test condition – A.

4.6.10 Moisture resistance (see 3.6.9). Connectors shall be tested in accordance with method 106 of MIL-STD-202. The following details and exceptions shall apply:

a. Mounting – Polyvinylchloride-insulated wires conforming to the type MW of MIL-W-76 shall be connected in the normal manner to the terminals. The connectors shall then be held in an approximately vertical position, with the finger pointed upward, by means of a nylon cord fastened to the sleeve, or by other suitable means simulating this condition.
b. Initial measurements – The insulation resistance shall be measured with a direct-current potential of 500 volts applied between mutually insulated terminals of the connectors. The dielectric withstanding voltage shall then be measured as specified in 4.6.5.
c. Subcycle (steps 7a and 7b) – Not applicable.
d. Polarization – A direct-current potential of 100 volts shall be applied between the terminals of 50 percent of the connectors. No potential shall be applied to the remaining 50 percent of the connectors.

e. Final measurements – After completion of step 6 of the final cycle, and not sooner than 1/2-hour nor later than 3 hours after the sample connectors have been removed from the chamber, the insulation resistance shall be measured as specified in 4.6.4. The connectors shall then be conditioned at a relative humidity of 50 ± 5 percent for a period of 24 hours, after which the contact resistance, insulation resistance, and dielectric withstanding voltage shall be measured as specified in 4.6.3, 4.6.4, and 4.6.5, respectively.

4.6.11 Vibration (see 3.6.10). Connectors shall be tested in accordance with method 204 of MIL-STD-202. The following details and exceptions shall apply:

a. Test condition number – A.
b. Method of mounting – Connectors shall be mounted with their axes in a horizontal plane.
c. Mating connector – Test connectors shall be mated to the approved mating connector and shall remain mated throughout the test. Each connector tested shall have a 3-foot length of cord, of the type usually used with the connector, attached and hanging free.
d. Direction of motion – Along the axis of the connector and then perpendicular to the axis of the connector.
e. Measurements after vibration – The contact resistance shall be measured as specified in 4.6.3.
f. Continuity shall be monitored during the test with a detector capable of detecting interruption of 1 microsecond or longer, or as specified with at least 100 milliamperes dc flowing through each set of contacts.

4.6.12 Shock (specified pulse) (see 3.6.11). Connectors shall be tested in accordance with method 213 of MIL-STD-202. The following details shall apply:

a. Test condition letter H (75 G's).
b. 6 blows in 3 planes (total 18 blows).
c. Mounting – Connectors shall be mounted on rigid test plate and tested in vertical position.
d. The test shall then be repeated with the connectors mounted on a horizontal plate.
e. Continuity shall be monitored during the test with a detector capable of detecting interruption of 1 microsecond or longer, or as specified with at least 100 milliamperes dc flowing through each set of contacts.
f. Measurement after test – The contact resistance shall be measured as specified in 4.6.3.

4.6.13 Salt spray (corrosion) (see 3.6.12). Connectors shall be tested in accordance with method 101 of MIL-STD-202. The following details shall apply:

a. Test condition letter B.
b. Measurement after test – Contact resistance shall be measured as specified in 4.6.3.
c. Unless otherwise specified, 5 percent salt solution.

4.6.14 Torque (unless otherwise specified, see 3.1) (see 3.6.13). With the sleeve of the connector held rigid, a twisting force of 2 pound-inches shall be applied for at least 1 minute to the tip of the connector assembly in a direction tending to loosen the tip. On three-element connectors having a dead collar between the tip and the ring, a twisting force of 1-1/2 pound-inches shall also be applied to the dead collar, in a direction tending to loosen it from the assembly.

4.6.15 Controlled drop (see 3.6.14). With the connector in the horizontal position each contact shall be subjected to the impact of a 0.75 ounce (minimum) brass weight dropped from a vertical distance of 6 feet (minimum). The weight shall be dropped through a tube 6 feet (minimum) long having an internal diameter of 7/16 ± 1/16 inch (11.11 ± 1.59 mm). Each contact shall be subjected to 3 consecutive blows with the connector being rotated 120° ± 10° between each blow.

4.6.16 Stack assembly (see 3.6.15). With the connector in the horizontal position, the connector shall be subjected to a static load of 8 pounds (minimum), on the number one contact, for a minimum period of 24 hours.

4.6.17 Static load (see 3.6.16). A static load of 150 pounds minimum shall be applied to the connector at approximately midpoint for 1 minute (minimum). The connector shall be resting in a horizontal position on a concrete floor or rigid metal surface. The load shall be applied perpendicular to the longitudinal axis of the connector through a rigid bar 0.50 ± 0.25 inch (12.70 ± 6.35 mm) wide placed tangent to the shell surface and parallel to the floor or surface supporting the connector.

4.6.18 Shell impact (see 3.6.17). With the connector in a horizontal position, the shell of the connector shall be subjected to the impact of a 3 ounce (minimum) weight dropped three times from a height of 6 feet (minimum) onto the shell of the connector. The weight shall be a solid brass cylinder having a diameter of 3/8 ± 1/16 inch (9.53 ± 1.59 mm). The weight shall be dropped through a vertical 1/2 ± 1/16 inch (12.7 ± 1.59 mm), inside diameter tube, so positioned that the weight strikes the shell approximately midway between the ends of the shell.

4.6.19 Contact spring pressure (see 3.6.18).

4.6.19.1 Mated connectors (see 3.6.18.1). The specified mating connector (see 3.1) conforming to the applicable specification shall be used. Each set of contacts shall be monitored for electrical continuity with a detector capable of detecting interruptions of 1 microsecond or longer with at least 100 milliamperes dc flowing through the set of contacts. Force shall be applied to the contact spring close to the point of contact in a direction perpendicular to and away from the connector axis. The force required to interrupt the monitor circuit shall be as specified in 3.6.18.1.

4.6.19.2 Unmated connectors (see 3.6.18.2). While in the unmated state, each contact spring shall be subjected to a force of 12 ounces minimum applied in a direction perpendicular to the connector axis away from the connector body.

4.6.20 Spring life (see 3.6.19). A standard steel test pin having the dimensions of the specified mating connector (see 3.1) conforming to the applicable specification sheet shall be used. The connectors should be lubricated, but the lubricant shall be removed at the completion of the last cycle of insertion and withdrawal. The test connector shall be subjected to 5,000 cycles of mating and unmating with the specified mating connector. The test connector shall then be examined for damage and loosening of parts, after which the contact resistance, dielectric withstanding voltage and insertion and withdrawal forces shall be tested as specified in 3.6.2, 3.6.4, and 3.6.5, respectively.

4.6.21 Frame strength (see 3.6.20). With the axis of the connector mated in a horizontal plane to a solid steel plug conforming to the dimensions of plug M9177/1-1, a 20-pound (minimum) load shall be freely suspended from the cord end of the connector for a minimum of five minutes in each of four 90 degree positions.

4.6.22 Spring attachment clip life (see 3.6.21). The spring attachment clip shall be subjected to 25,000 cycles of full opening and full closing of the clip jaws.

4.6.23 Cable retention (see 3.6.22). The specified cable (see 3.1) shall be assembled to the test connector. The connector body shall be secured and a tensile load applied to the cable parallel to the axis of the connector. The force shall be held for 30-seconds minimum. The force shall be as specified (see 3.1).

4.6.23.1 Anti-rotation detents (see 3.6.22.1). The specified cable (see 3.1) shall be assembled to the test connector. The connector body shall be secured and the cable shall be clamped close to the point that it exits the connector body. A twisting force of seven pound-inches shall be applied to the cable in each direction for a minimum of one minute.

4.6.24 RFI shielding (see 3.6.22.2). The RFI shielding effectiveness of mated connectors with RFI shells shall be measured in a triaxial radio frequency leakage fixture shown on figure 4. The RFI leakage from the conductor inside the connector in the inner coaxial line into the outer coaxial line shall be measured at the frequencies specified in 3.6.22.2 within a frequency accuracy of ± 5 percent. The level of detected

signal power shall be indicated by a tunable radio frequency field intensity meter isolated from the test circuit by a 3 to 10 dB pad. Care shall be taken to ensure that the signal is a result of RFI leakage from within the mated connector and not due to a faulty termination inside the fixture. All terminations inside the fixture, whether to the RFI shells or between internal conductors, shall have a leakage at least 10 dB less than the test requirements. The signal source shall be set to the desired frequency. The signal shall be fed through a 3 to 10 dB isolation pad to a parallel circuit consisting of a coaxial switch (DPDT) so connected that the signal can be manually or electrically fed alternately to the fixture and to a variable 100 dB reference attenuator. The attenuator shall be adjustable in 1 dB steps and calibrated to ± 3 dB.

a. The inserts may be removed from the connectors under test or the contacts removed and a hole drilled through the inserts to accommodate a center conductor of suitable geometry to provide a good 50-ohm impedance match with the inside diameter of the mated connector shells. Tapered transitions may be used to provide a means of changing diameters without introducing significant discontinuities in the line. The maximum VSWR in the inner coaxial line shall be 1.5 dB. The outer shall of the test fixture shall be so constructed as to provide a good 50-ohm impedance match with the outside diameter of the mated connector shells. The maximum VSWR of the outer coaxial line shall be 1.5 dB.
b. A sliding circumferential short shall be positioned behind the connector on the single input end of the fixture to provide for tuning the outer coaxial line for maximum output at each test frequency. The allowable travel of this short shall be greater than 1/2 wave length at the lowest test frequency of 1.5 meters minimum for 100 MHz. The inner coaxial line shall be terminated in a fixed 50-ohm load impedance behind the connector at the output end of the fixture.
c. The connectors used to couple together the various elements of the test system shall be of a low-leakage type which have a nominal impedance of 50 ohms, a VSWR of less than 1.5 dB, and a minimum leakage attenuation of 100 dB. The output impedance of the signal source and the input impedance of the detector shall be nominally 50 ohms with a maximum VSWR of 1.5 dB. The input and output VSWR of the standard attenuator shall be less than 1.5 in the 20 to 100 dB range.
d. The relative signal level in the variable attenuator shall be equal to the signal level through the leakage fixture by adjusting the attenuator. The signal loss in the fixture can then be read from the setting on the variable attenuator.

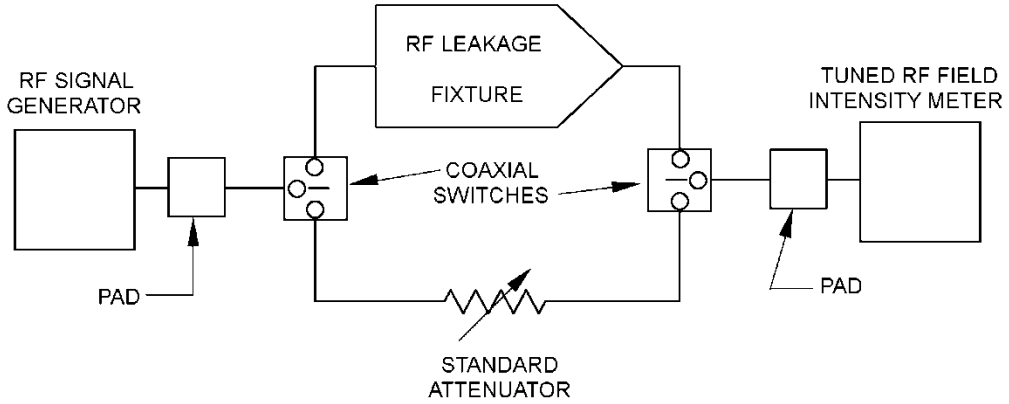

SCHEMATIC TEST SYSTEM

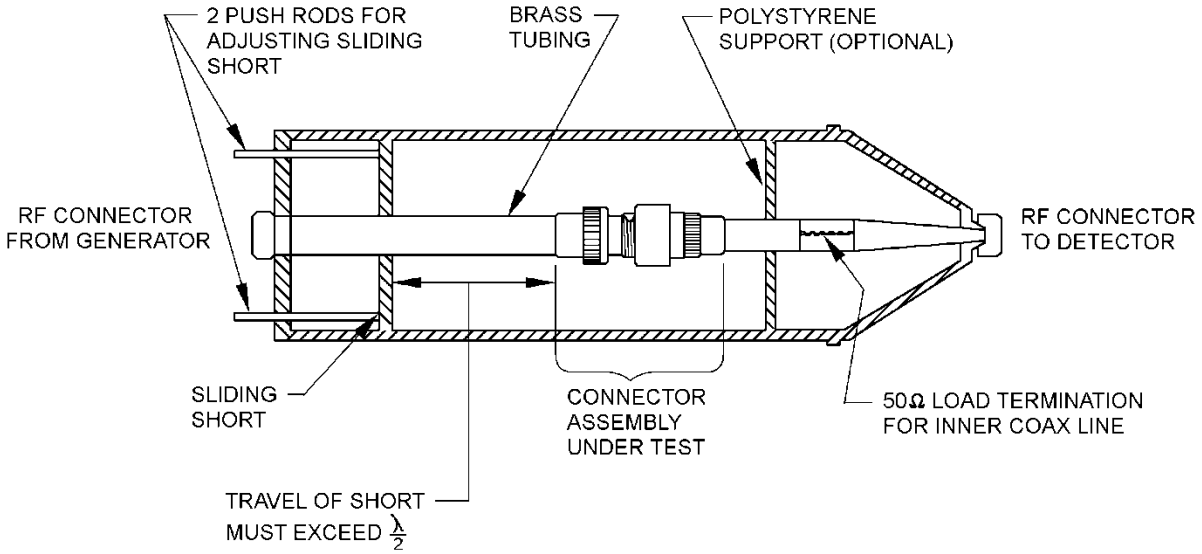

FIGURE 4. RFI leakage test fixture.

5. PACKAGING

5.1 Packaging requirements. For acquisition purposes, the packaging requirements shall be as specified in the contract or order (see 6.2). When actual packaging of materiel is to be performed by DoD or in-house contractor personnel, these personnel need to contact the responsible packaging activity to ascertain packaging requirements. Packaging requirements are maintained by the Inventory Control Point's packaging activity within the Military Service or Defense Agency, or within the military service system commands. Packaging data retrieval is available from the managing Military Department's or Defense Agency's automated packaging files, CD-ROM products, or by contacting the responsible packaging activity.

6. NOTES

(This section contains information of a general or explanatory nature, which may be helpful but is not mandatory.)

6.1 Intended use. The connectors covered by this specification are primarily for use in airborne audio systems.

6.1.1 Soldering and unsoldering. Connector terminals should not be soldered or unsoldered while connectors are mated.

6.2 Acquisition requirements. Acquisition documents should specify the following:

a. Title, number, and date of this specification.
b. Title, number, and date of the applicable specification sheet, and the complete PIN (see 3.1).
c. Packaging requirements (see 5.1).

6.3 Qualification. With respect to products requiring qualification, awards will be made only for products which are, at the time of award of contract, qualified for inclusion in Qualified Products List QPL No. 9177 whether or not such products have actually been so listed by that date. The attention of the contractors is called to these requirements, and manufacturers are urged to arrange to have the products that they propose to offer to the Federal Government tested for qualification in order that they may be eligible to be awarded contracts or orders for the products covered by this specification. Information pertaining to qualification of products may be obtained from (insert name, mailing address, and email of qualifying activity). An online listing of products qualified to this specification may be found in the Qualified Products Database (QPD) at https://assist.dla.mil.

6.4 Environmentally preferable material. Environmentally preferable materials should be used to the maximum extent possible to meet the requirements of this specification. As of the dating of this document, the U.S. Environmental Protection Agency (EPA) is focusing efforts on reducing 31 priority chemicals. The list of chemicals and additional information is available on their website http://www.epa.gov/osw/hazard/wastemin/priority.htm. Included in the EPA list of 31 priority chemicals are cadmium, lead, and mercury. Use of these materials should be minimized or eliminated unless needed to meet the requirements specified herein (see Section 3).

6.5 Subject term (key word) listing.

Plug
Contact

6.6 Changes from previous issue. Marginal notations are not used in this revision to identify changes with respect to the previous issue due to the extent of the changes.

CONCLUDING MATERIAL

Custodian:
Air Force – 85
DLA - CC

Review activities:
Air Force – 19, 99

Preparing activity:
DLA - CC

(Project 5935-2013-144)

NOTE: The activities listed above were interested in this document as of the date of this document. Since organizations and responsibilities can change, you should verify the currency of the information above using the ASSIST Online database at https://assist.dla.mil.