FED SUP CLASS
5930

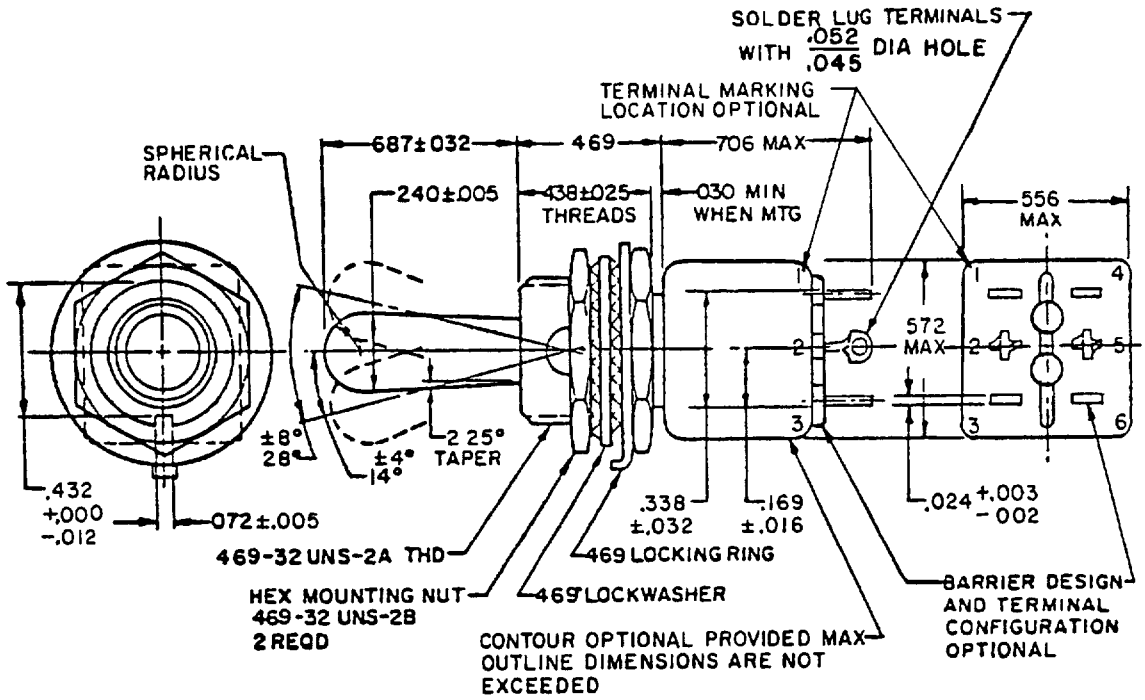

DETAIL REQUIREMENTS·

MS DASH NO. 1/	MS DASH NO. 2/	CIRCUIT MADE BETWEEN TERMINALS AS INDICATED WITH TOGGLE LEVER IN THESE POSITIONS· (a)			CURRENT CAPACITY IN AMPERES						LIFE LOW CURRENT LEVEL SWITCHING 5 mV
					RESISTIVE LOAD			INDUCTIVE LOAD			
		OPPOSITE KEYWAY SIDE	CENTER POSITION	KEYWAY SIDE	28 VOLTS DC	115 VOLTS 60 HERTZ AC	115 VOLTS 400 HERTZ AC	28 VOLTS DC	115 VOLTS 60 HERTZ AC	115 VOLTS 400 HERTZ AC	
-831	-331	2-3 5-6 ON	2-3 4-5 ON	1-2 4-5 ON	5	2	3	(b) 1	1	2	(c) 25 µA
-841	-341	2-3 5-6 MOM-ON	2-3 4-5 ON	1-2 4-5 MOM-ON							
-821	-321	NONE	2-3 5-6 ON	1-2 4-5 MOM-ON							
-851	-351	2-3 5-6 ON	2-3 4-5 ON	1-2 4-5 MOM-ON							

(a) Direction of movement of internal mechanism is opposite to the direction of the toggle movement.
(b) With time constant of .020 ±.002 seconds
(c) Contact resistance not to exceed 50 ohms during life, low current level switching

1/ 800 series toggle seal (water) 15' head, 300 series toggle seal (water) 1/2" head
See note 7

2/ Delayed action of the switch toggle lever may cause circuit to close or open before snap action mechanism trips.

(J) denotes change

P A AF - 85 Other Cust Army - ER Navy - AS	International interest	TITLE SWITCH, TOGGLE, POSITIVE BREAK, SPECIAL CIRCUIT, MINIATURE, TOGGLE SEALED, SOLDER LUG, DOUBLE POLE, 469 MOUNTING BUSHING	MILITARY STANDARD MS21353
Procurement Specification MIL-S-8834		SUPERSEDES MS0021353	PAGE 1 OF 2

DD FORM 1 MAY 73 672 (Coordinated) PREVIOUS EDITIONS OF THIS FORM ARE OBSOLETE 5930-1275-6

Distribution Statement A. Approved for public release, distribution is unlimited.

APPROVED 17 Mar 72 REVISED (E) 20 Jul 77 (F) 16 MAR 1978 (G) 15 MAY 1980 (H) 10 Dec 81 (J) 18 OCT 1985

User activities Army - MI Navy - Air Force -
Review activities Army - AR, AV Navy - EC Air Force 11,17,99

This military standard is approved for use by all Departments and Agencies of the Department of Defense. Selection for all new engineering and design applications and for repetitive use shall be made from this document when applicable

INCHES	MM	INCHES	MM	INCHES	MM
.002	.05	.030	.76	.432	10.97
.003	08	.032	.81	438	11 13
.005	.13	045	1.14	469	11.91
.010	.25	052	1.32	.556	14.12
.012	.30	.072	1.83	572	14.53
.016	.41	.169	4.29	.687	17.45
.024	.61	240	6.10	.706	17.93
.025	.64	.338	8.59		

(J) NOTES

1. Dimensions are in inches.
2. Metric equivalents are given for general information only
3. Unless otherwise specified, tolerances are ±.010 (0.25 mm) on decimals and ±.5° on angles
4. For hardware detail specifications see appendix of MIL-S-8834.
5. In the event of a conflict between the text of this standard and the references cited herein, the text of this standard shall take precedence
6. Referenced Government documents of the issue listed in that issue of the Department of Defense Index of Specifications and Standards (DoDISS) specified in the solicitation form a part of this standard to the extent specified herein.
7. Toggle seal test. Method I for 800 series, Method II for 300 series
8. Shock Method I and Method II (high impact) The switch shall be electrically and mechanically operative at the conclusion of the shock test except there can be mechanical transfer of the contact mechanism at all levels when tested in accordance with Method II (high impact).
9. Weight .0463 pound maximum (21 grams)
10. Strength of terminal 5 pounds pull perpendicular to mounting plane and 2 pounds in other planes
11. Dielectric withstanding voltage. 1,200 V rms at sea level
12. Altitude. 50,000 feet
13. 115 V ac, 60 hertz electrical endurance tests are to be performed at room temperature and pressure.

User activities Army - MI Navy - Air Force -
Review activities Army Navy - Air Force AR, AV EC 11,17,99
This military standard is approved for use by all Departments and Agencies of the Department of Defense Selection for all new engineering and design applications and for repetitive use shall be made from this document when applicable
APPROVED 17 Mar 72 REVISED (J) FOR CHANGE SEE PAGE 2