INCH-POUND

MIL-DTL-8783/1A
30 July 2008
SUPERSEDING
MIL-DTL-8783/1
6 July 1998

DETAIL SPECIFICATION SHEET

CLAMP, HOSE, FLAT BAND 500 °F

This specification is approved for use by all Departments and Agencies of the Department of Defense.

The requirements for acquiring the product described herein shall consist of this specification sheet and MIL-DTL-8783.

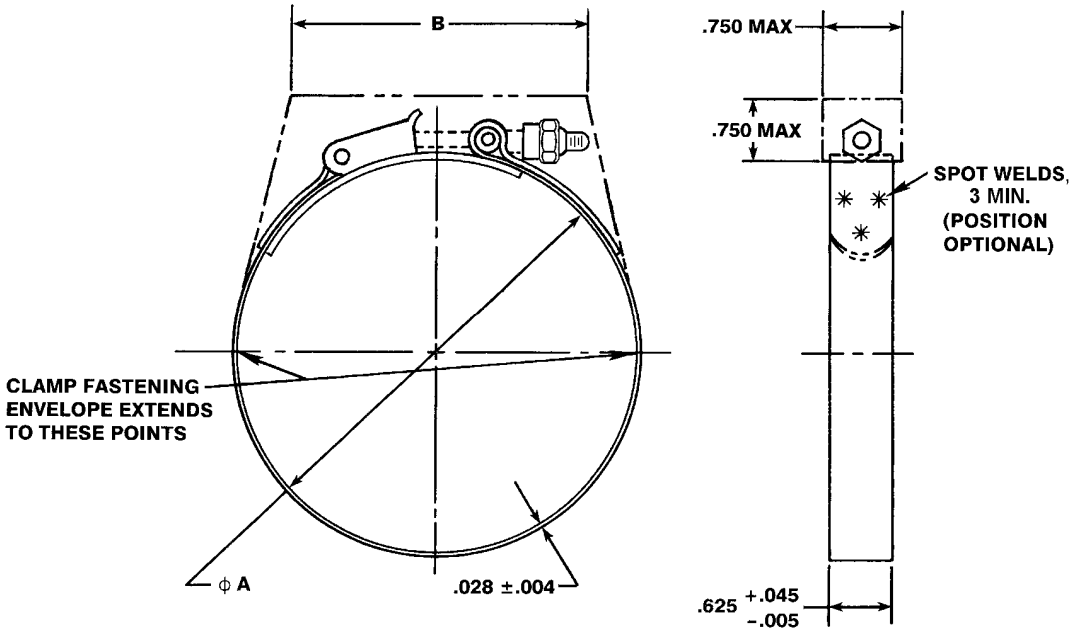

Inches	mm
.004	0.10
.005	0.13
.028	0.71
.045	1.14
.625	15.88
.750	19.05

NOTES:

1. Dimensions in inches, metric equivalents are given for information only.
2. The illustration is for identification purposes only and is not intended to restrict designs and shapes of fastening devices, which conform to the requirements and are within the envelope dimensions.

FIGURE 1. Hose clamp.

TABLE I. Dimensions for parts that are active for new design (new weapon systems only). 1/ 2/

T-bolt latch	Quick release latch	A Inside diametral range				B Maximum		Adjustment range T-bolt	Wt/lbs max quick release	Wt/lbs max T-bolt
		Extended min		Compressed max		T-bolt type	Quick release type			
		Inches	mm	Inches	mm					
MS21920-20	MS21920-20R	2.50	63.5	2.25	57.2				.139	.095
MS21920-22	MS21920-22R	2.75	69.9	2.50	63.5				.143	.099
MS21920-24	MS21920-24R	3.00	76.2	2.75	69.9				.146	.102
MS21920-26	MS21920-26R	3.25	82.6	3.00	76.2			.25	.150	.106
MS21920-28	MS21920-28R	3.50	88.9	3.25	82.6			(6.35)	.153	.109
MS21920-30	MS21920-30R	3.75	95.3	3.50	88.9				.157	.113
MS21920-33	MS21920-33R	4.12	104.6	3.75	95.3				.164	.120
MS21920-35	MS21920-35R	4.38	111.3	4.00	101.6				.167	.123
MS21920-37	MS21920-37R	4.62	117.3	4.25	108.0				.171	.127
MS21920-39	MS21920-39R	4.88	124.0	4.50	114.3				.174	.130
MS21920-41	MS21920-41R	5.12	130,0	4.75	120.7	3.0			.178	.134
MS21920-43	MS21920-43R	5.38	136.7	5.00	127.0	(76.2)	3.4		.181	.137
MS21920-45	MS21920-45R	5.62	142.7	5.25	133.4		(86.36)		.185	.141
MS21920-47	MS21920-47R	5.88	149.4	5.50	139.7			.38	.188	.144
MS21920-49	MS21920-49R	6.12	155.4	5.75	146.1			(9.65)	.192	.148
MS21920-51	MS21920-51R	6.38	162.1	6.00	153.4				.195	.151
MS21920-53	MS21920-53R	6.62	168.1	6.25	158.8				.199	.155
MS21920-55	MS21920-55R	6.88	174.8	6.50	165.1				.202	.158
MS21920-57	MS21920-57R	7.12	180.8	6.75	171.5				.205	.161
MS21920-59	MS21920-59R	7.38	187.5	7.00	177.8				.209	.165
MS21920-61	MS21920-61R	7.62	193.5	7.25	184.2				.212	.168
MS21920-66	MS21920-66R	8.25	209.5	7.62	193.5				.227	.188
MS21920-70	MS21920-70R	8.75	222.3	8.12	206.2				.234	.190
MS21920-74	MS21920-74R	9.25	235.0	8.62	218.9	3.8	4.2	.62	.241	.197
MS21920-78	MS21920-78R	9.75	246.4	9.12	231.6	(96.52)	(106.68)	(157.48)	.248	.204
MS21920-80	MS21920-80R	10.00	254.0	9.38	238.3				.251	.207

1/ Dimensions are in inches.
2/ Metric equivalents are given for information only.

TABLE II. Dimensions, for parts that are Inactive for new design (replacement parts only). 1/ 2/

T-bolt latch	Quick release latch	A Inside diametral range				B Maximum		Adjustment range ref	Weight Pounds max
		Extended min		Compressed max		T-bolt type	Quick-release type		
		Inches	mm	Inches	mm				
MS21920-21	MS21920-21R	2.62	66.5	2.38	60.5	3.0 (76.2)	3.4 (86.36)	.25 (6.35)	.143
MS21920-23	MS21920-23R	2.88	73.2	2.62	66.5				.146
MS21920-25	MS21920-25R	3.12	79.2	2.88	73.2				.150
MS21920-27	MS21920-27R	3.38	85.9	3.12	79.2				.153
MS21920-29	MS21920-29R	3.62	91.9	3.38	85.9				.157
MS21920-32	MS21920-32R	4.00	101.6	3.62	91.9			.38 (9.65)	.164
MS21920-34	MS21920-34R	4.25	108.0	3.88	98.6				.167
MS21920-36	MS21920-36R	4.50	114.3	4.12	104.6				.171
MS21920-38	MS21920-38R	4.75	120.7	4.38	111.3				.174
MS21920-40	MS21920-40R	5.00	127.0	4.62	117.3				.178
MS21920-42	MS21920-42R	5.25	133.4	4.88	124.0				.181
MS21920-44	MS21920-44R	5.50	139.7	5.12	130.0				.185
MS21920-46	MS21920-46R	5.75	146.1	5.38	136.7				.188
MS21920-48	MS21920-48R	6.00	152.4	5.62	142.7				.192
MS21920-50	MS21920-50R	6.25	158.8	5.88	149.4				.195
MS21920-52	MS21920-52R	6.50	165.1	6.12	155.4				.199
MS21920-54	MS21920-54R	6.75	171.5	6.38	162.1				.202
MS21920-56	MS21920-56R	7.00	177.8	6.62	168.1				.205
MS21920-58	MS21920-58R	7.25	184.2	6.88	174.8				.209
MS21920-60	MS21920-60R	7.50	190.5	7.12	180.8				.212
MS21920-64	MS21920-64R	8.00	203.2	7.38	187.5	3.8 (96.52)	4.2 (106.68)	.62 (15.74)	.227
MS21920-68	MS21920-68R	8.50	215.9	7.88	200.2				.234
MS21920-72	MS21920-72R	9.00	228.6	8.38	212.9				.241
MS21920-76	MS21920-76R	9.50	241.3	8.88	225.6				.248

1/ Dimensions are in inches.
2/ Metric equivalents are given for information only.

REQUIREMENTS:

The hose clamp shall be specified on figure 1 and in tables I and II.
Material: See acquisition specification.
Finish: See acquisition specification.
Dimension B applies when the clamp is in the tightened condition at the maximum and minimum positions of its diametral range.
The T-bolt head/shank fillet radius shall be 0.030 inch minimum.
Remove all burrs and sharp edges.

Changes from previous issue. Marginal notations are not used in this revision to identify changes with respect to the previous issue due to the extent of the changes.

Referenced document. This document references MIL-DTL-8783.

CONCLUDING MATERIAL

Custodians:
Army - AR
Navy - AS
Air Force - 99
DLA - CC

Preparing activity:
DLA - CC

(Project 4730-2008-093)

Review activities:
Army - AT, AV, MI
Navy - CG, MC, SA, SH
Air Force - 71

NOTE: The activities listed above were interested in this document as of the date of this document. Since organizations and responsibilities can change, you should verify the currency of the information above using the ASSIST Online database at http://assist.daps.dla.mil