MILITARY SPECIFICATION

COAXIAL ASSEMBLIES, TNC TYPE (0.03 to 18 GHz)

This specification is approved for use by the Department of the Air Force, and is available for use by all Departments of the Department of Defense.

1. SCOPE

1.1 This specification covers the detail requirements for a series of TNC type coaxial assemblies operating over the frequency range of 0.03 to 18 GHz.

2. APPLICABLE DOCUMENTS

2.1 Issues of documents. The following document, of the issue in effect on date of invitation for bids or request for proposal, forms a part of this specification to the extent specified herein.

SPECIFICATION

MILITARY

MIL-C-87104 -Coaxial Assemblies, General Specification For

(Copies of specifications, standards, drawings, and publications required by contractors in connection with specific procurement functions should be obtained from the procuring activity or as directed by the contracting officer.)

3. REQUIREMENTS

3.1 General specification applicability. All requirements of MIL-C-87104 shall apply to this specification with modifications as specified herein. Modifications (options, specific values, exceptions, or additions) to MIL-C-87104 shall be identified by similarity of paragraph headings herein. When the general specification and this document conflict, the requirements of this document shall govern.

3.2 Qualification. This specification requires qualification inspection.

FSC 5985

Beneficial comments (recommendations, additions, deletions) and any pertinent data which may be of use in improving this document should be addressed to: ASD/ENESS, Wright-Patterson AFB, OH 45433 by using the self-addressed Standardization Document Improvement Proposal (DD Form 1426) appearing at the end of this document or by letter.

3.3 Parts, materials, and processes

3.3.1 Finishes

3.3.1.1 Plating

3.3.1.1.1 The center contacts on connectors and receptacles shall be gold-plated.

3.3.1.1.2 The outer contacts on male connectors and the inner contact surfaces of the outer contact on female connectors and receptacles shall be gold-plated.

3.3.1.2 Dimensions. All dimensions specified on the figures herein shall apply after plating.

3.3.1.3 Sharp edges. All sharp edges outlined on the figures herein shall be broken 0.015 inch.

3.3.1.4 Surface roughness. Unless otherwise indicated on the figures herein, surface roughness on all machined surfaces shall be 125μ.

3.3.2 Marking

3.3.2.1 Tags A and B information. The information contained on tags A and B, referenced on the figures herein, shall be as required by the contract (see 6.1.1 herein).

3.4 Design and construction

3.4.1 Functional subassemblies, form factor, and interface design. Functional subassemblies, form factor, and interface design requirements for the coaxial assemblies shall be in accordance with table I herein.

3.5 Performance

3.5.1 Electrical properties. Specific values for the electrical properties of the coaxial assemblies shall be as specified herein.

3.5.1.1 Frequency range. The coaxial assemblies shall operate over the frequency range of 0.03 to 18 GHz.

TABLE I. Design and construction parameters.

COAXIAL ASSEMBLIES	FORM FACTOR	MALE INTERFACE	FEMALE INTERFACE
CABLE ASSEMBLY CG-3778/U (Type A)	Figure 1	Figure 7	
CABLE ASSEMBLY CG-3799/U (Type B)	Figure 2	Figure 7	
CABLE ASSEMBLY CG- (Type C)	Figure 3	Figure 7	Figure 9
CABLE ASSEMBLY CG- (Type D)	Figure 4	Figure 7	Figure 9
RIGHT ANGLE ADAPTER	Figure 5	Figure 7	Figure 9
PANEL RECEPTACLE	Figure 6		Figure 9

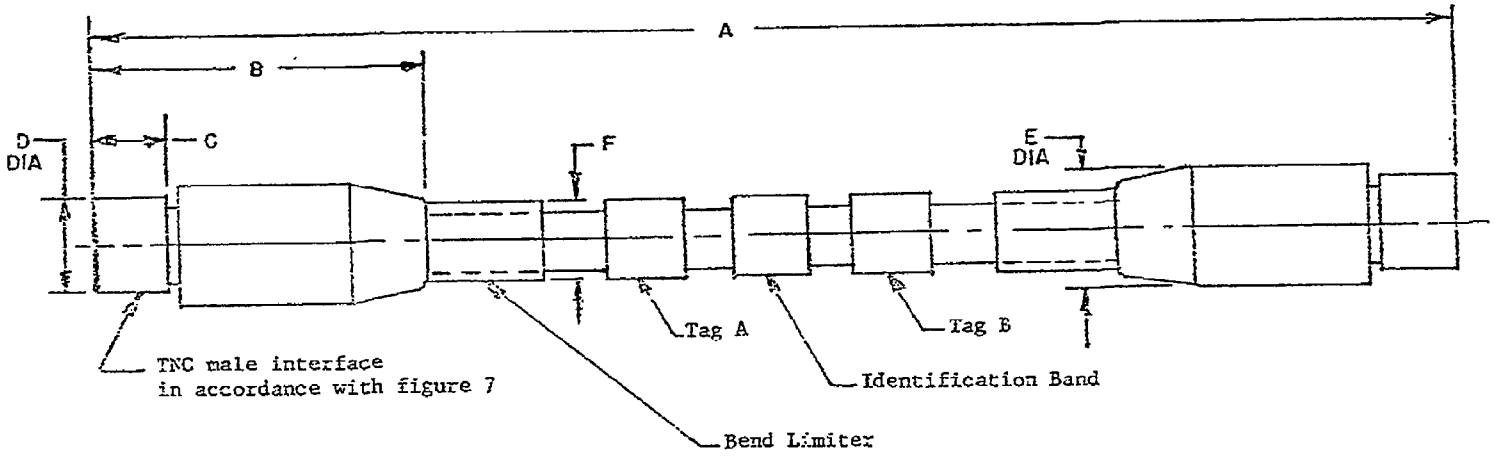

CODE LETTER	INCHES		MM	
	DIMENSION	TOLERANCE	DIMENSION	TOLERANCE
A	as required	note 1	as required	note 1
B	2.25	max	57.15	max
C	0.520	±0.005	13.21	±0.127
D	0.625	±0.005	15.88	±0.127
E	0.800	max	20.32	max
F	0.510	±0.03	12.95	±0.75

NOTES:

1. Tolerance for over-all cable length is ±0.25 inch up to 100 inches, and an additional ±0.25 inch for each additional 100 inches in excess of the first 100 inches.

2. Tags A and B to identify mating connector.

FIGURE 1. TNC cable assembly (Type A).

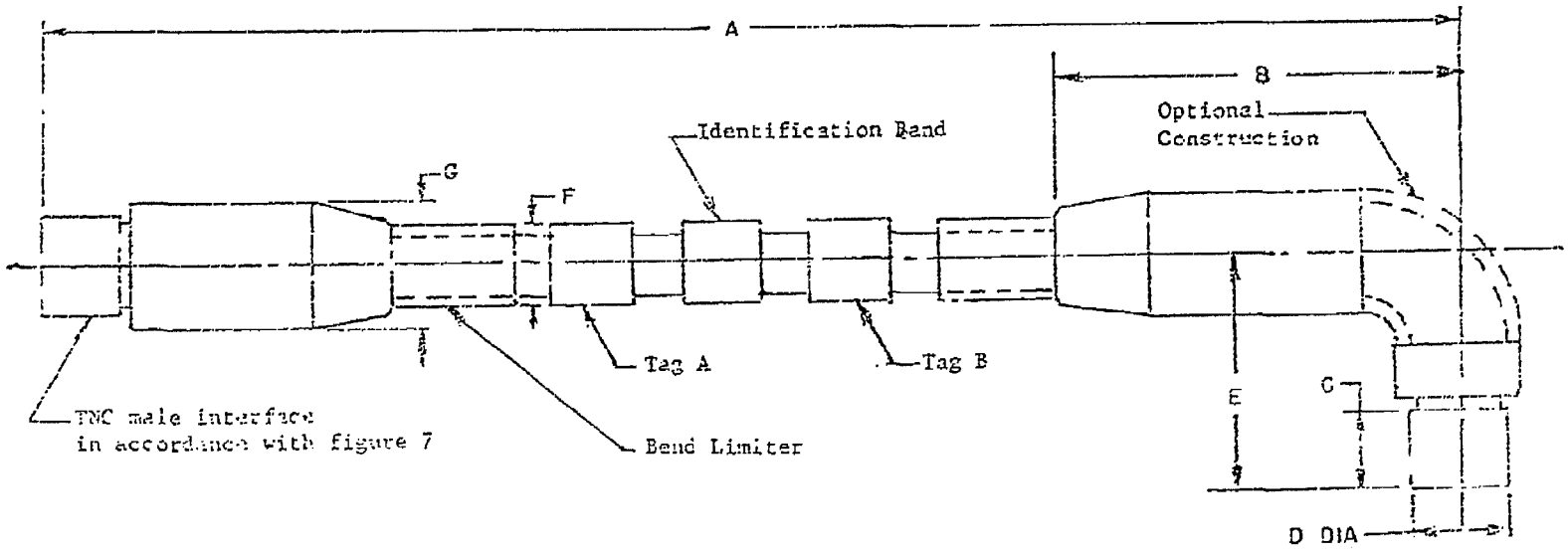

CODE LETTER	INCHES		MM	
	DIMENSION	TOLERANCE	DIMENSION	TOLERANCE
A	as required	note 1	as required	note 1
B	3.0	max	76.2	max
C	0.520	±0.005	13.21	±0.127
D	0.625	±0.005	15.88	±0.127
E	1.50	±0.015	38.1	±0.381
F	0.510	±0.03	12.95	±0.75
G	0.800	max	20.32	max

NOTES:

1. Tolerance for over-all cable length is ±0.25 inch up to 100 inches, and an additional ±0.25 inch for each additional 100 inches in excess of the first 100 inches.

2. Tags A and B to identify mating connector.

FIGURE 2. TNC cable assembly (Type B).

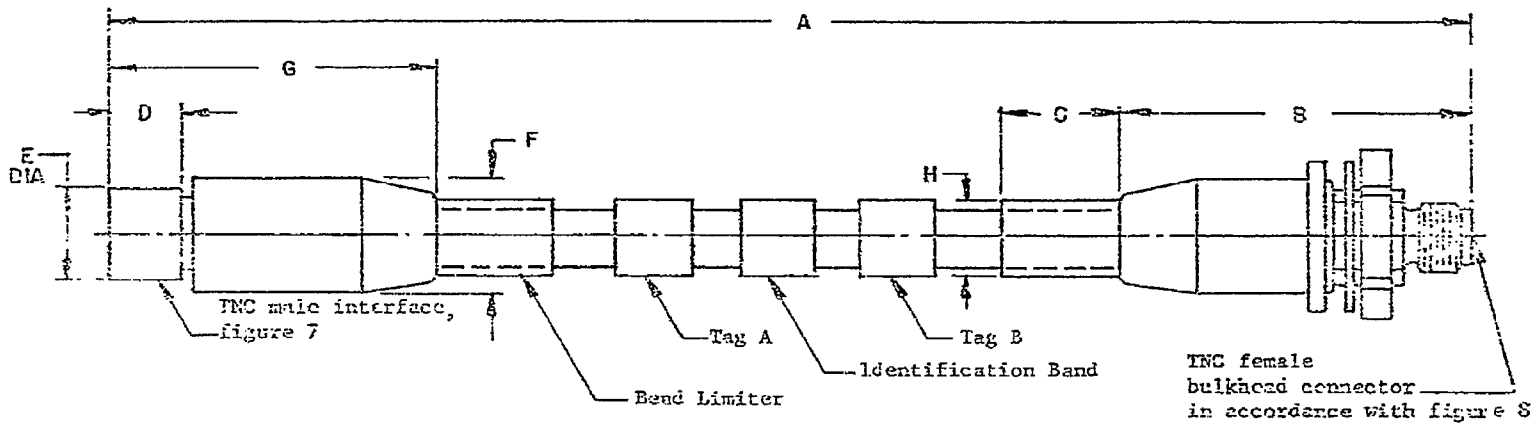

CODE LETTER	INCHES		MM	
	DIMENSION	TOLERANCE	DIMENSION	TOLERANCE
A	as required	note 1	as required	note 1
B	2.50	±0.06	63.5	±1.6
C	1.0	±0.06	25.4	±1.6
D	0.520	±0.005	13.21	±0.127
E	0.625	±0.005	15.88	±0.127
F	0.800	max	20.32	max
G	2.25	max	57.15	max
H	0.510	±0.03	12.95	±0.75

NOTES:

1. Tolerance for over-all cable length is ±0.25 inch up to 100 inches, and an additional ±0.25 inch for each additional 100 inches in excess of the first 100 inches.

2. Tags A and B to identify mating connector.

FIGURE 3. TNC cable assembly (Type C).

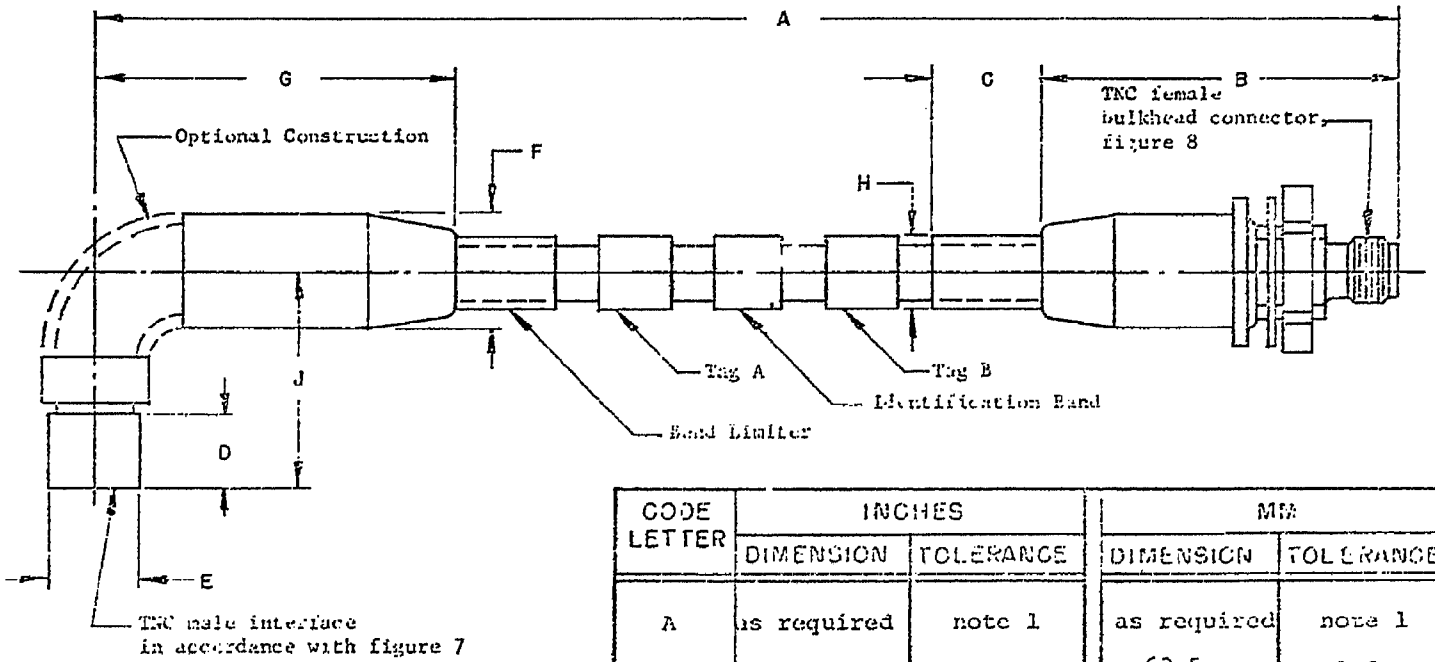

NOTES:

1. Tolerance for overall cable length is ±0.5 inch up to 100 inches, and an additional ±0.25 inch for each additional 100 inches in excess of the first 100 inches.

2. Tags A and B to identify mating connector.

CODE LETTER	INCHES		MM	
	DIMENSION	TOLERANCE	DIMENSION	TOLERANCE
A	as required	note 1	as required	note 1
B	2.50	±0.06	63.5	±1.6
C	1.0	±0.06	25.4	±1.6
D	0.520	±0.005	13.21	±0.13
E	0.625	±0.005	15.88	±0.13
F	0.800	max	20.32	max
G	3.00	max	76.2	max
H	0.510	±0.03	12.95	±0.75
J	1.50	±0.015	38.1	±0.38

FIGURE 4. TNC cable assembly (Type D).

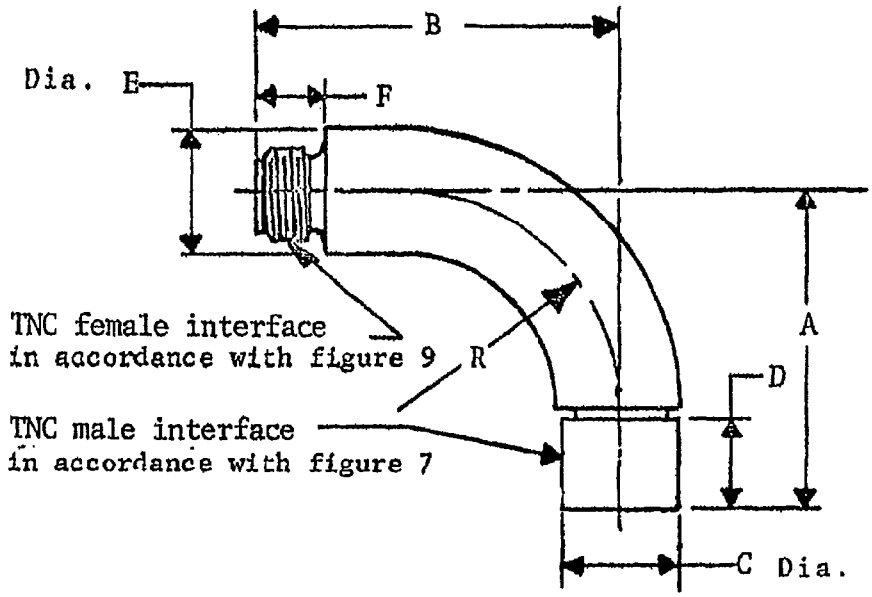

CODE LETTER	INCHES		MM	
	DIMENSION	TOLERANCE	DIMENSION	TOLERANCE
A	1.75	max	44.45	max
B	2.00	max	50.8	max
C	0.625	±0.005	15.88	±0.127
D	0.520	±0.005	13.21	±0.127
E	0.630	max	16.0	max
F	0.390	±0.015	9.91	±0.381
R	as required		as required	

FIGURE 5. TNC right angle adapter.

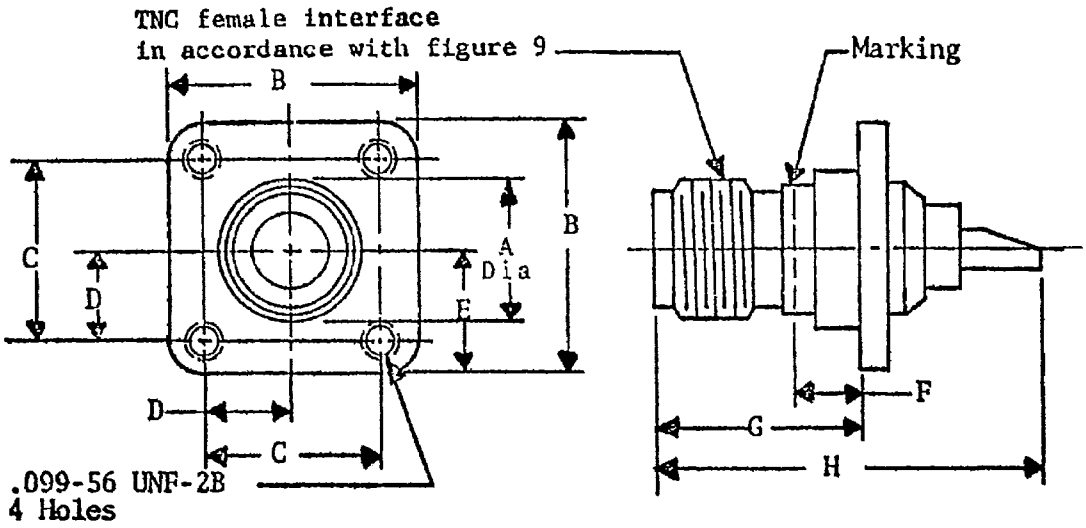

NOTE: Dimension F is for maximum panel depth.

CODE LETTER	INCHES		MM	
	DIMENSION	TOLERANCE	DIMENSION	TOLERANCE
A	0.434	±0.02	11.02	±0.51
B	0.69	±0.01	17.54	±0.25
C	0.500	±0.004	12.7	±0.102
D	0.250	±0.005	6.35	±0.127
E	0.343	±0.005	8.71	±0.127
F	0.125	max	3.17	max
G	0.625	± .06	15.88	±1.52
H	1.187	max	30.15	max

FIGURE 6. TNC panel receptacle (flange mounted).

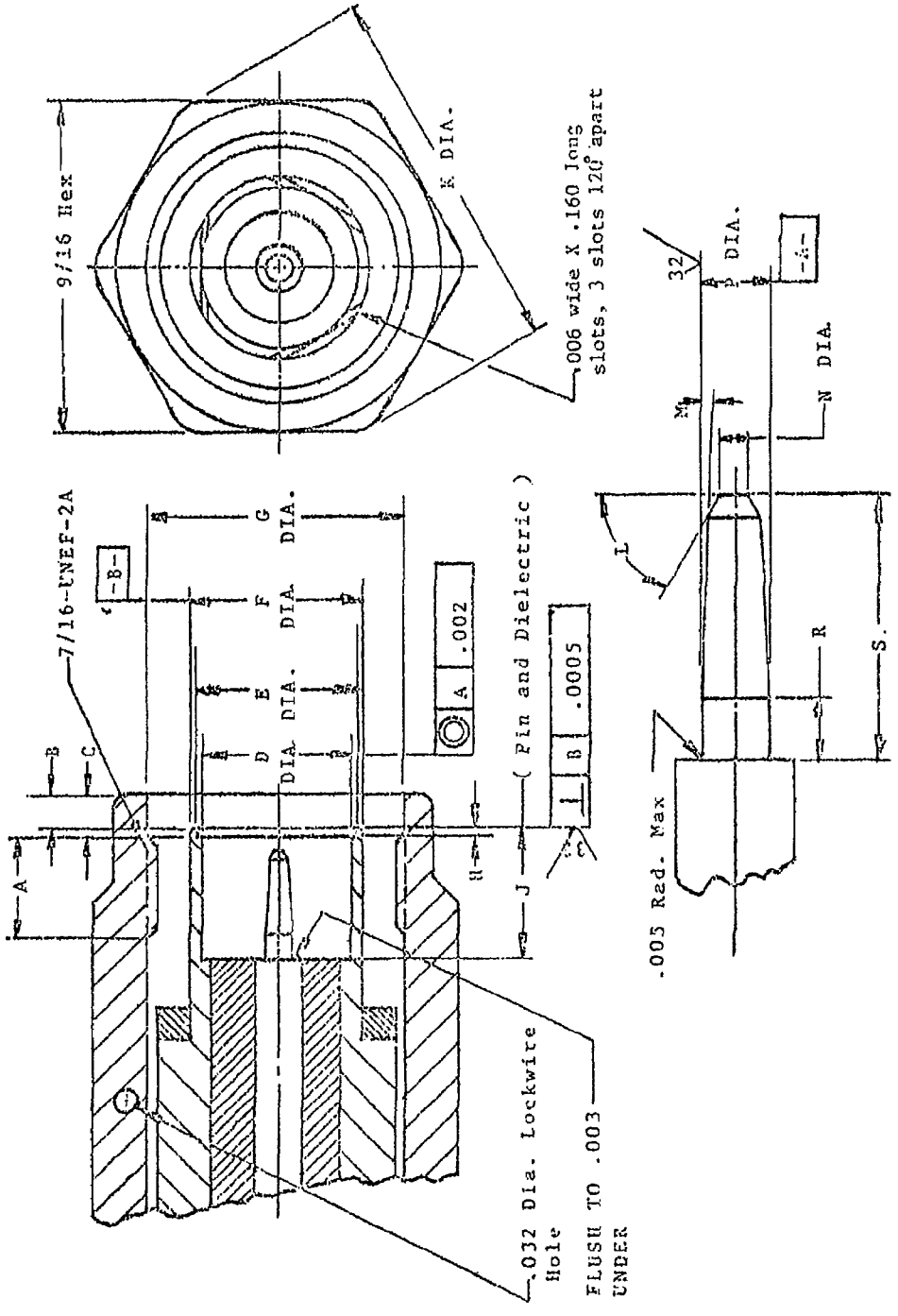

FIGURE 7 (Sheet 1 of 2). TNC male interface dimensions.

CODE LETTER	INCHES		MM	
	DIMENSION	TOLERANCE	DIMENSION	TOLERANCE
A	0.195	+0.020	4.953	±0.500
B	0.030	+0.010	0.762	±0.254
C	0.075	±0.010	1.905	±0.254
D	0.239	±0.001	6.071	±0.025
E	0.267	±0.001	6.781	±0.025
F	0.3235	±0.0015	8.217	±0.038
G	0.440	min	11.18	min
H	0.0075	±0.0015	0.191	±0.038
J	0.2105	±0.0015	5.347	±0.038
K	0.630	±0.010	16.002	±0.254
L	60°	+0° -30'		
M	2°	+0° -30'		
N	0.020	±0.005	0.508	±0.127
P	0.0535	±0.0005	1.359	±0.013
R	0.040	±0.005	1.016	±0.127
S	0.187	±0.005	4.750	±0.127

FIGURE 7 (Sheet 2 of 2). TNC male interface dimensions.

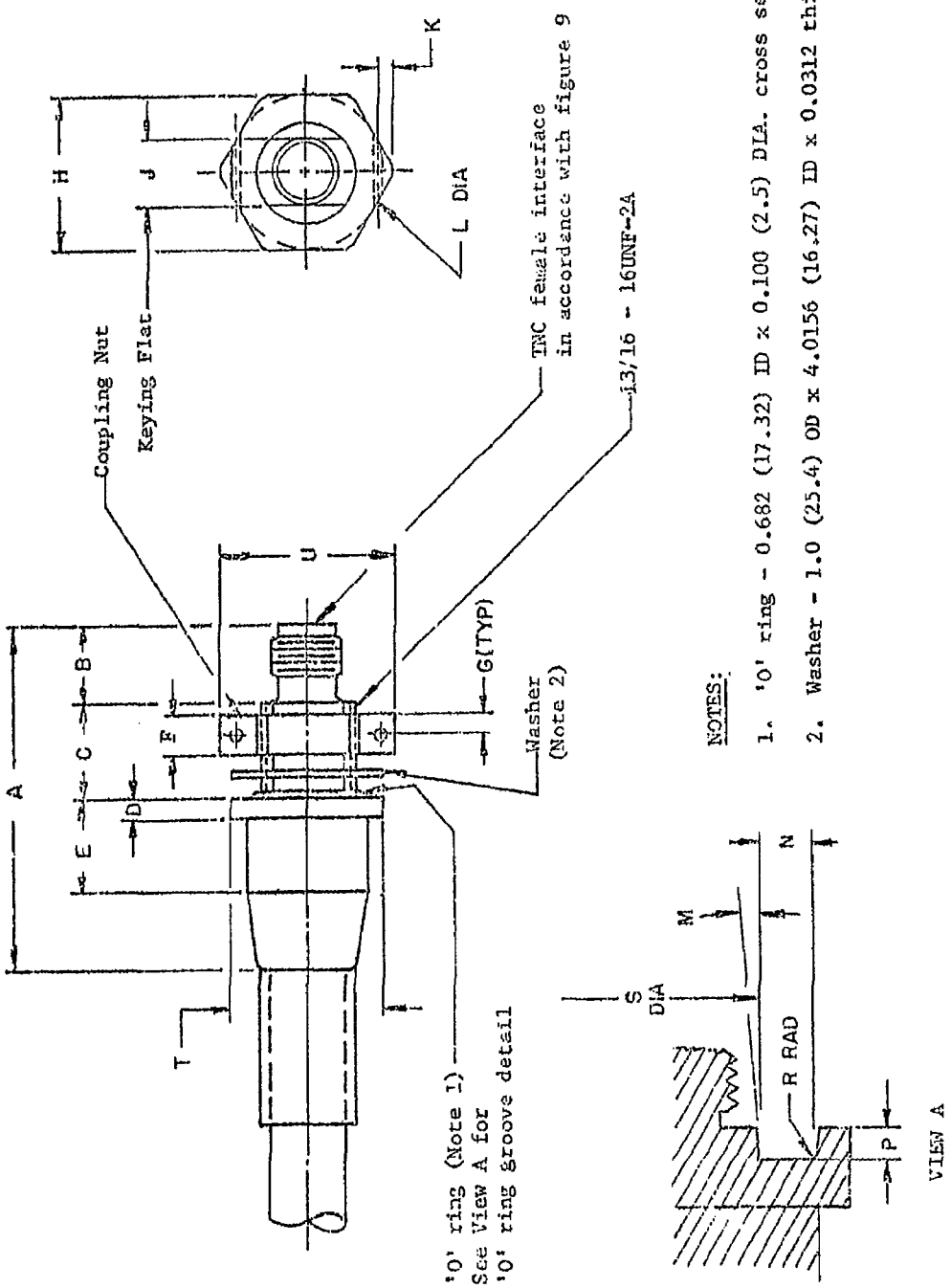

NOTES:

1. 'O' ring - 0.682 (17.32) ID x 0.100 (2.5) DIA. cross section.
2. Washer - 1.0 (25.4) OD x 4.0156 (16.27) ID x 0.0312 thick.

FIGURE 8 (Sheet 1 of 2). TNC female bulkhead connector.

CODE LETTER	INCHES		MM	
	DIMENSION	TOLERANCE	DIMENSION	TOLERANCE
A	2.50	±0.06	63.5	±1.6
B	0.50	+0.03 - .0	12.7	+0.8 -0.0
C	0.63	±0.03	15.88	±0.8
D	0.13	±0.03	3.175	±0.8
E	0.63	±0.03	15.88	±0.8
F	0.25	±0.03	6.35	±0.8
G	0.13	±0.02	3.175	±0.4
H	1.0	±0.02	25.4	±0.4
J	0.438	±0.001	11.125	±0.025
K	0.09	±0.02	2.381	±0.4
L	0.064	+0.004 -0.001	1.626	+0.100 -0.025
M	5°	max		max
N	0.104	±0.003	2.642	±0.075
P	0.050	±0.001	1.127	±0.025
R	0.01	max	0.254	max
S	0.678	±0.001	17.22	±0.025
T	1.0	±0.03	25.4	±0.8
U	1.15	+0.0 -0.05	29.21	+0.0 -1.27

FIGURE 8 (Sheet 2 of 2). TNC female bulkhead connector.

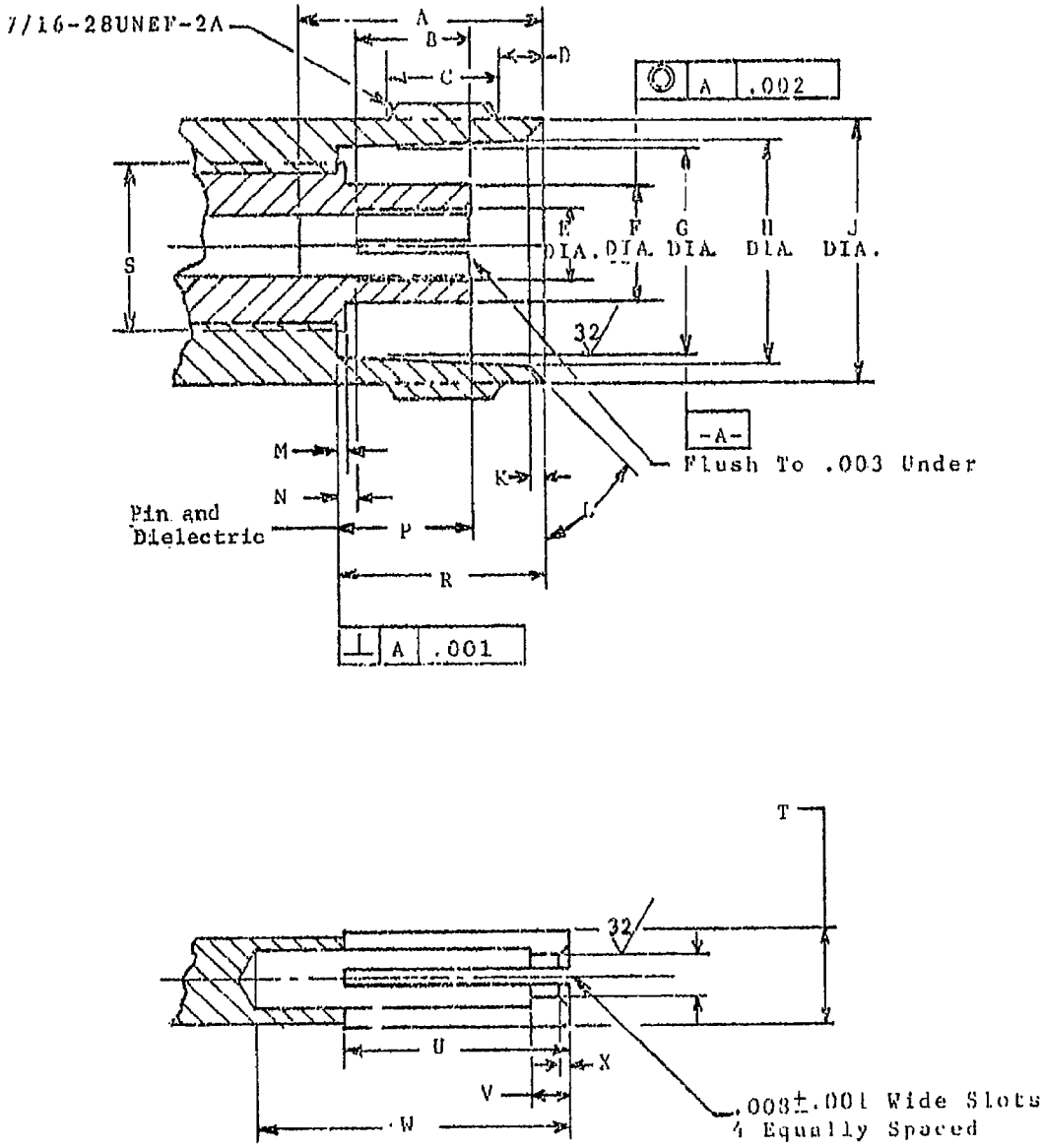

FIGURE 9 (Sheet 1 of 2). TNC female interface dimensions.

CODE LETTER	INCHES		MM	
	DIMENSION	TOLERANCE	DIMENSION	TOLERANCE
A	0.420	min	10.668	min
B	0.185	±0.005	4.70	±0.127
C	0.210	±0.020	5.334	±0.508
D	0.078	±0.010	1.981	±0.254
E	0.091	±0.001	2.31	±0.025
F	0.185	±0.001	4.699	±0.025
G	0.320	±0.001	8.128	±0.025
H	0.330	±0.003	8.382	±0.075
J	0.380	±0.001	9.652	±0.025
K	0.030	±0.001	0.762	±0.025
L	45°	+15° -0°		
M	0.0045	+0.0015	0.114	+0.038
N	0.031	±0.005	0.787	±0.127
P	0.2065	±0.0015	5.25	±0.038
R	0.331	±0.002	8.407	±0.051
S	0.265	±0.001	6.731	±0.025
T	0.0855	± .0005	0.217	±0.0013
U	0.185	±0.005	4.699	±0.127
V	0.025	±0.010	0.635	±0.254
W	0.200 min		5.080min	
X	0.0075	±0.0025	0.127	±0.063

FIGURE 9 (Sheet 2 of 2). TNC female interface dimensions.

3.5.1.2 VSWR. The VSWR at the input to the coaxial assemblies shall not exceed the values specified in table II herein.

3.5.1.3 Insertion loss

3.5.1.3.1 Cable assemblies. The insertion loss of the cable assemblies shall not exceed the values specified in table III herein, as applicable.

3.5.1.3.2 Right angle adapter. The insertion loss of the right angle adapter shall not exceed 0.22 dB at 18 GHz.

3.5.1.3.3 Panel receptacle. The insertion loss of the panel receptacle shall not exceed 0.16 dB at 18 GHz.

3.5.1.4 Corona. The corona extinction point of the coaxial assemblies shall not be less than 2000 volts rms.

3.5.1.5 High potential. The high potential test voltage shall be 2500 volts rms.

3.5.1.6 Altitude compliance

3.5.1.6.1 Corona requirements. The corona extinction point shall not be less than 1000 volts rms at the altitude specified in MIL-C-87104.

3.5.1.6.2 High potential requirements. The high potential test voltage shall be 2000 volts rms at the altitude specified in MIL-C-87104.

3.5.1.7 PHC. The coaxial assemblies shall withstand the CW power specified in table II herein and 4000 watts of peak power, at a duty cycle of 5 percent at 18 GHz.

3.5.1.8 R-f leakage. The r-f suppression capability shall be 90 dB/ft.

TABLE II. VSWR values.

VSWR	FREQUENCY (GHz)	CW POWER (Watts)
1.25:1	0.03 to 8.0	250
1.35:1	8.0 to 16.0	200
1.50:1	16.0 to 18.0	200

TABLE III. Insertion loss for cable assemblies.

FREQUENCY (GHz)	ATTENUATION (W)	LOSSES IN dB OF CONNECTORS (Y)	(Z)
0.03	0.68	0.025	0.050
0.30	2.70	0.030	0.070
1.00	5.80	0.035	0.075
2.00	9.00	0.040	0.080
3.00	11.60	0.045	0.090
5.00	16.10	0.055	0.100
8.00	21.10	0.064	0.120
10.00	25.10	0.075	0.135
12.00	28.20	0.080	0.140
16.00	33.00	0.100	0.200
18.00	36.50	0.110	0.220

COMPUTATION: The insertion loss for cable assemblies shall be computed as follows for each frequency shown above:

For Types A and C: Insertion loss in dB = $\frac{W \times L}{100} + 2Y$

For Types B and D: Insertion loss in dB = $\frac{W \times L}{100} + (Y + Z)$

WHERE:

W = Attenuation in dB per 100 feet
L = Lehgth in feet
Y = Insertion loss of straight connector
Z = Insertion loss of right angle connector.

3.5.1.9 VP

3.5.1.9.1 Cable assemblies. The velocity of propagation for cable assemblies shall be as specified in table IV herein.

3.5.1.9.2 Right angle adapter and panel receptacle. The velocity of propagation for the right angle adapter and panel receptacle shall be not less than 69 percent.

3.5.2 Mechanical requirements. Mechanical values for the coaxial assemblies shall be as specified herein.

3.5.2.1 Tensile load stress force. The coaxial assemblies shall withstand a tensile load stress force of 75 pounds.

3.5.2.2 Torque values

3.5.2.2.1 Cable assemblies. Cable assemblies shall withstand a torque force of 25 inch-pounds.

3.5.2.2.2 Rigid assemblies and connectors. Rigid assemblies and connectors shall withstand a torque force of 60 inch-pounds.

3.5.2.2.3 Coupling nut. The coupling nut shall be torqued to 23 inch-pounds prior to performing the torque test.

3.5.2.3 Outer diameter of cable. The outer diameter of coaxial cable shall be a nominal 0.375 inch.

3.5.3 Environmental conditions

3.5.3.1 Flow test weight. The flow test weight shall be 9 pounds.

TABLE IV. Velocity of propagation for cable assemblies.

COMPUTATION: The velocity of propagation (VP) for cable assemblies shall not be less than the values as calculated in the equation below:

For Types A and C: $VP = \frac{(80.0 \times L) - 25.2 \text{ (in. \%)}}{L}$

For Types B and D: $VP = \frac{(80.0 \times L) - 53.2 \text{ (in. \%)}}{L}$

WHERE:

L = Inches
Quotient = Percent of free space propagation.

4. QUALITY ASSURANCE PROVISIONS

4.1 The quality assurance provisions of MIL-C-87104 shall apply to this specification, with additions and exceptions specified herein. When the general specification and this specification conflict, this specification shall govern.

4.2 Quality conformance test program. A coaxial assembly that is procured with lesser frequency coverage than that specified herein shall be subjected to quality conformance testing in the frequency range of 0.03 GHz to the maximum frequency required for that assembly.

4.3 Methods of inspection. The required specific testing values for electrical properties, mechanical requirements, and environmental conditions shall be as specified herein under 3.5.1, 3.5.2, and 3.5.3, respectively. Additional testing requirements shall be as specified herein.

4.3.1 Insertion loss frequencies. The insertion loss tests shall be conducted at each of the frequencies specified under 3.5.1.3 herein.

4.3.2 Interface gauging tests

4.3.2.1 Procedure I. Procedure I shall be an acceptance test for female TNC type connectors.

4.3.2.1.1 Test apparatus. Gauge pins shall be in accordance with figures 10 and 11 herein.

4.3.2.1.2 Procedural steps. Procedure I shall be conducted in accordance with the following steps:

a. Step 1: Insert pin A into the center contact until it bottoms.

b. Step 2: Carefully invert the receptacle so that the pin can, without jarring or shaking, fall free of the center contact.

c. Step 3: Insert pin B into the center contact.

d. Step 4: Attach a spring scale, or other appropriate means of measuring tension, to pin B.

e. Step 5: Slowly withdraw pin B from the center contact. Record the number of pounds of force required to withdraw pin B.

f. Step 6: Repeat step 5, two additional times.

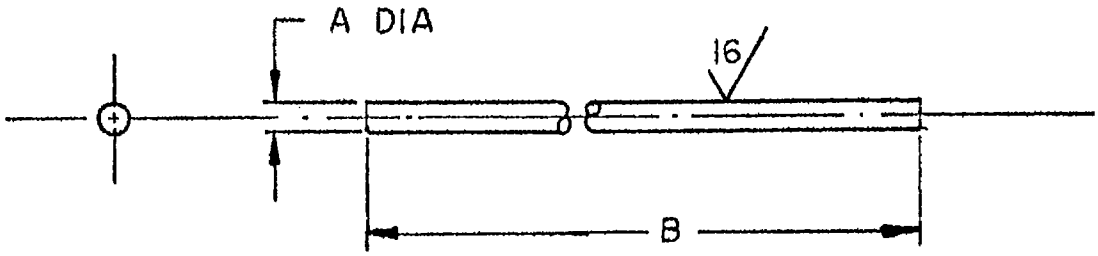

CODE LETTER	INCHES		MM	
	DIMENSION	TOLERANCE	DIMENSION	TOLERANCE
A	0.042	+0.000 -0.001	1.067	+0.000 -0.025
B	2.25	±0.25	57.150	±6.350

FIGURE 10. TNC pin gauge A.

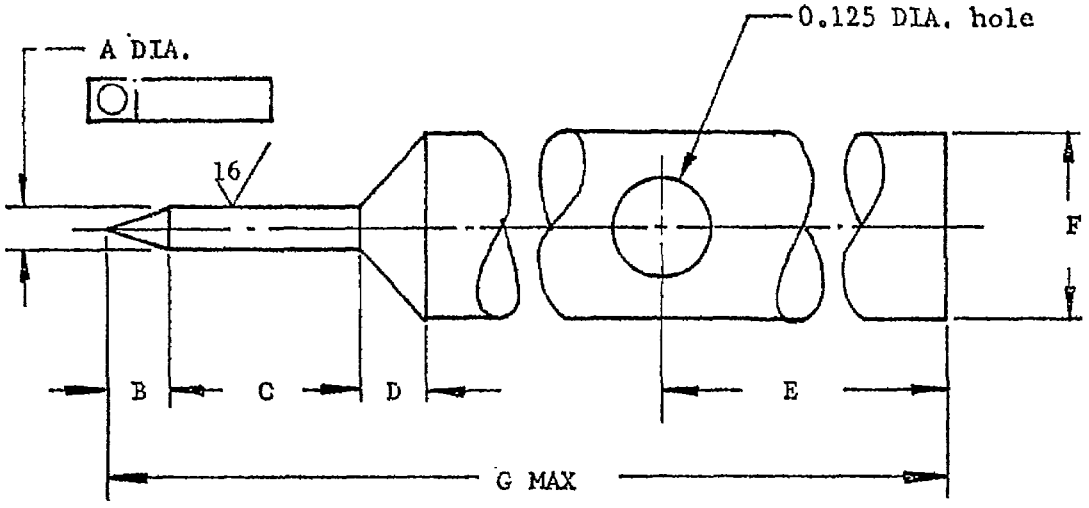

CODE LETTER	INCHES		MM	
	DIMENSION	TOLERANCE	DIMENSION	TOLERANCE
A	0.0535	±0.0005	1.359	±0.0127
B	0.06	±0.01	1.524	±0.25
C	0.250	±0.005	6.350	±0.127
D	0.06	±0.01	1.524	±0.25
E	0.75	±0.01	19.050	±0.25
F	0.25	±0.01	6.350	±0.25
G	2.00	max	50.80	max

FIGURE 11. TNC pin gauge B.

4.3.2.1.3 Accept-reject criteria (procedure I). The female TNC type connector shall be considered to have passed the interface gauging test if:

a. During step 2, pin A falls of its own weight from the center contact when the connector is inverted.

b. During step 5, the force required to withdraw pin B is 3; +2, -1 ounce.

4.3.2.2 Procedure II. Procedure II shall be an acceptance test for male TNC type connectors.

4.3.2.2.1 Test apparatus. Ring and fit gauges shall be in accordance with figures 12 and 13 herein. Associated indicator light circuits shall also be required.

4.3.2.2.2 Procedural steps. Procedure II shall be oonducted in accordance with the following steps:

a. Step 1: Connect ring A to an indicator light circuit.

b. Step 2: Place ring A over the outer contact until it seats.

c. Step 3: Keeping ring A firmly seated, slowly rotate the ring gauge through 360° while observing the indicator light.

d. Step 4: Remove ring A and connect the indicator light circuit to ring B.

e. Step 5: Place ring B over the outer contact until it seats.

f. Step 6: Keeping ring B firmly seated, slowly rotate the ring gauge with translation while observing the indicator light.

g. Step 7: Remove ring B.

4.3.2.2.3 Accept-reject criteria (procedure II). The male TNC type connector shall be considered to have passed the interface gauging test if:

a. The indicator light remains lit at all angles of rotation during step 3.

b. There is a position of no contact between ring B and the outer contact as evidenced by the unlighted condition of the indicator lamp during step 6.

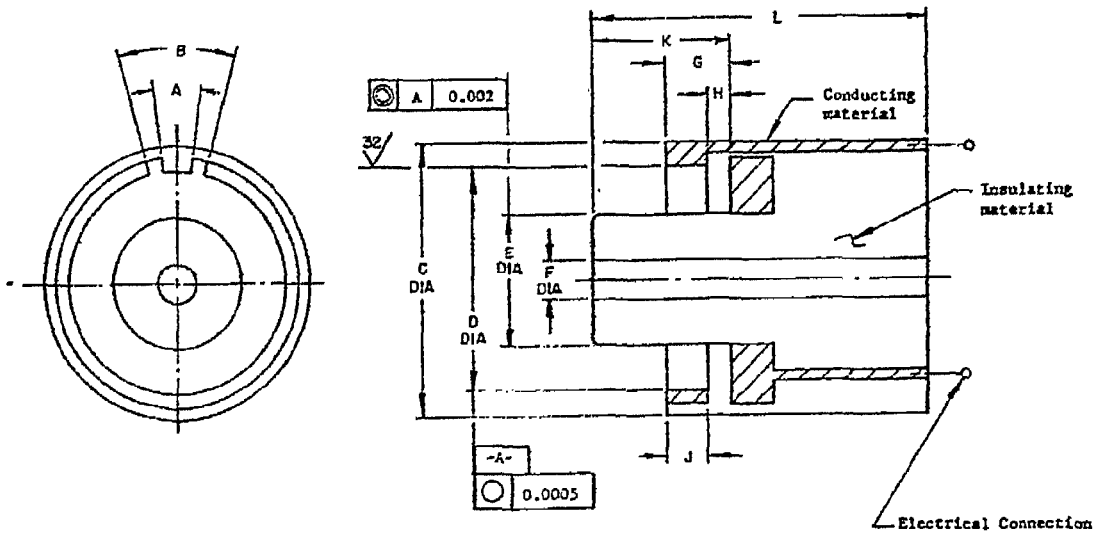

CODE LETTER	INCHES		MM	
	DIMENSION	TOLERANCE	DIMENSION	TOLERANCE
A	15°	±30'		
B	30°	±30'		
C	0.40	+0.000 -0.005	10.160	+0.000 -0.127
D	0.321	±0.0005	8.153	±0.013
E	0.236	+0.000 -0.002	5.994	+0.000 -0.051
F	0.056	±0.001	1.422	±0.025
G	0.063	±0.016	1.600	±0.406
H	0.016	+0.0156 -0.000	0.406	+0.396 -0.000
J	0.063	±0.016	1.60	±0.406
K	0.205	±0.001	5.207	±0.025
L	0.50	min	12.70	min

FIGURE 12. TNC ring gauge A.

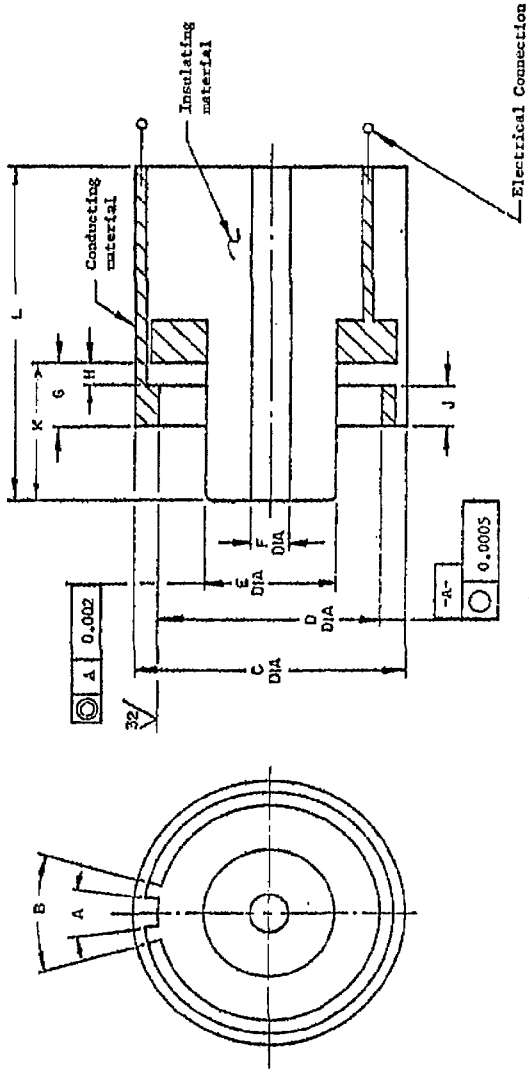

CODE LETTER	INCHES		MM	
	DIMENSION	TOLERANCE	DIMENSION	TOLERANCE
A	15°	±30'		
B	30°	±30'		
C	0.40	+0.000 -0.005	10.160	+0.000 -0.127
D	0.327	±0.0005	8.306	±0.013
E	0.236	+0.000 -0.002	5.994	+0.000 -0.051
F	0.056	±0.001	1.422	±0.025
G	0.063	±0.016	1.600	±0.406
H	0.016	+0.0156 -0.000	0.406	+0.396 -0.000
J	0.063	±0.016	1.60	±0.406
K	0.205	±0.001	5.207	±0.025
L	0.50	min	12.70	min

FIGURE 13. TNC ring gauge B.

5. PACKAGING

5.1 Section 5 of MIL-C-87104 shall apply.

6. NOTES

6.1 Section 6 of MIL-C-87104 shall apply.

6.1.1 The contract should specify the required information for tags A and B.

Custodian:
Air Force - 11

Preparing activity:
Air Force - 11

Project No. 5985-F472-2