INCH-POUND

MIL-DTL-83798/6C
w/AMENDMENT 1
9 January 2012
SUPERSEDING
MIL-DTL-83798/6C
18 August 2008

DETAIL SPECIFICATION SHEET

FITTINGS, RUBBER HOSE, LIGHTWEIGHT, MEDIUM PRESSURE, FLARELESS, SWIVEL NUT, 90 DEGREES

This specification is approved for use by all Departments and Agencies of the Department of Defense.

The requirements for acquiring the product described herein shall consist of this specification sheet and MIL-DTL-83798.

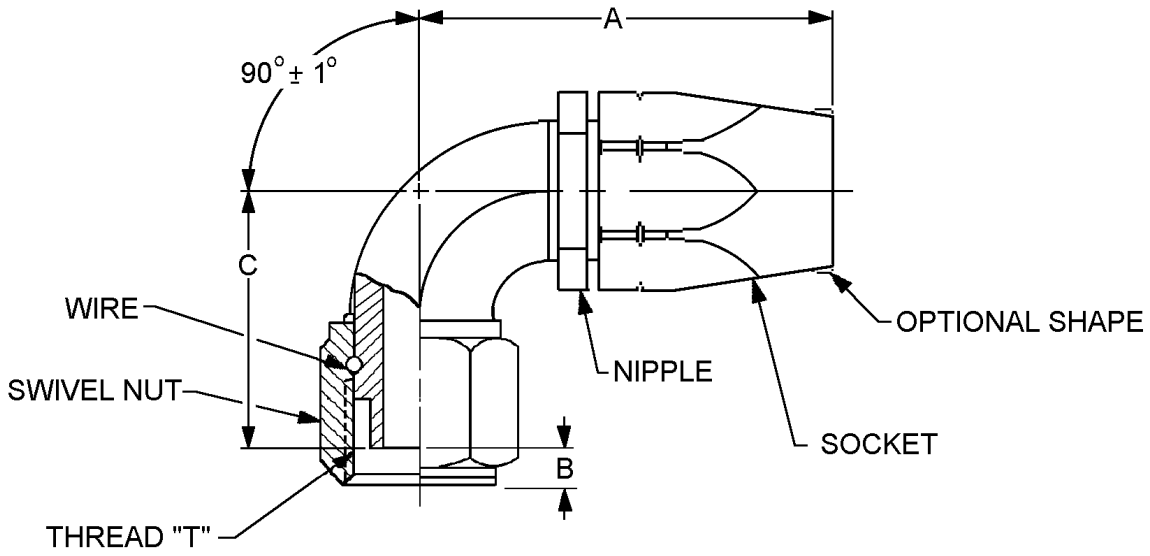

FIGURE 1. Fitting, flareless, swivel nut, 90 degrees.

Dash number	Thread "T"	A (max)		B		C		Weight (max)	
		inch	mm	inch ±0.03	mm ±0.76	inch ±0.035	mm ±0.883	lbs	grams
-3	.375-24UNJF-3B	1.58	40.13	.14	3.56	.867	22.022	.050	22.68
-4	.438-20UNJF-3B	1.60	40.64	.22	5.59	.860	21.844	.077	34.93
-5	.500-20UNJF-3B	1.68	42.67	.22	5.59	1.000	25.400	.100	45.36
-6	.563-18UNJF-3B	1.85	46.99	.20	5.08	1.112	28.245	.060	27.22
-8	.750-16UNJF-3B	2.01	51.05	.21	5.33	1.156	29.362	.092	41.73
-10	.875-14UNJF-3B	2.25	57.15	.24	6.10	1.392	35.357	.130	58.97
-12	1.063-12UNJ-3B	2.66	67.56	.32	8.13	1.626	41.300	.202	91.63
-16	1.313-12UNJ-3B	2.97	75.44	.33	8.38	1.776	45.110	.320	145.15
-20	1.625-12UNJ-3B	3.38	85.85	.37	9.40	2.056	52.222	.556	252.20
-24	1.875-12UNJ-3B	3.77	95.76	.34	8.64	2.440	61.976	.711	322.50
-32	2.500-12UNJ-3B	4.06	103.12	.37	9.40	3.020	76.708	1.296	587.86

NOTES:
1. Dimensions are in inches.
2. Metric equivalents are given for information only.
3. If required, lockwire holes to be drilled in accordance with SAE-AS1043. Use the letter "L" for ordering fittings with lockwire hole.

FIGURE 1. Fitting, flared, swivel nut, 90 degrees - Continued.

REQUIREMENTS:

Design and construction:

Dimensions and configuration: See figure 1.

Swivel nut and seat of nipple shall mate with SAE-AS33514.

Materials and finishes. Materials and finishes for the socket, nipple, nut, and wire (swivel nut to nipple) shall be in accordance with MIL-DTL-83798.

Part or Identifying Number (PIN) example:

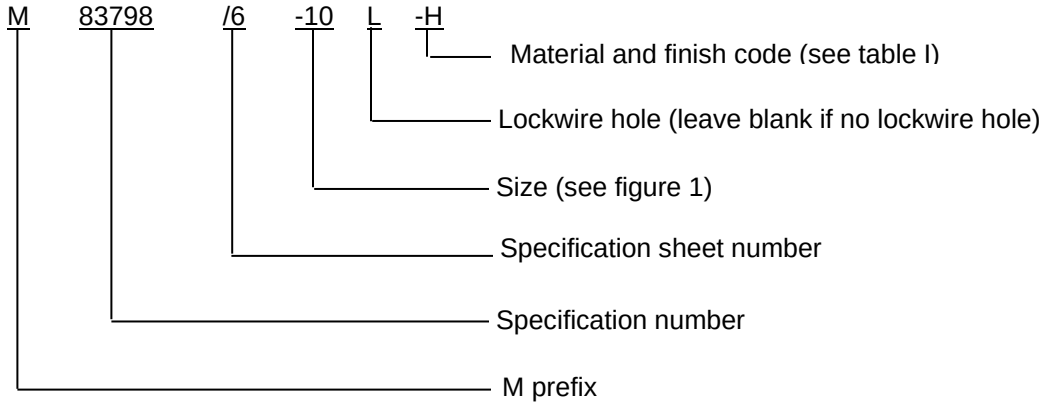

M83798/6-10L-H indicates: 7/8″ fitting, flareless, swivel nut, 90 degrees, with lockwire hole, with zinc phosphate finish on nipple and nut.

Nut and nipple material and finish code for steel (sizes -3, -4, and -5) are specified in table I.

TABLE I. Nut and nipple material and finish code. 1/

PIN code dash letter	Material	Plating Finish
Blank	Steel (sizes -3, -4, and -5)	Cadmium plating in accordance with SAE-AMS-C-81562, type II, class 3 or SAE-AMS-QQ-P-416, type II, class 2.
	Aluminum (sizes -6 and above)	Anodize in accordance with MIL-A-8625, type II.
-A	Steel (sizes -3, -4, and -5)	Aluminum-nickel in accordance with ASTM F1136, grade 3, NC.
-B	Aluminum (sizes -6 and above)	Anodize in accordance with MIL-A-8625, type II with Naval Air Systems Command (NAVAIR) trivalent chromium pretreatment (TCP) in accordance with MIL-DTL-81706, type 2, class 1A.
-CN	Steel (sizes -3, -4, and -5)	Cadmium plating in accordance with SAE-AMS-C-81562, type II, class 3 or SAE-AMS-QQ-P-416, type II, class 2 with NAVAIR TCP in accordance with MIL-DTL-81706, type 2, class 1A.
-H	Steel (sizes -3, -4, and -5)	Zinc phosphate finish in accordance MIL-DTL-16232 type Z, class1. 2/
-J	Steel (sizes -3, -4, and -5)	Zinc plating in accordance with ASTM B633; type II or III, Fe/Zn 5, or ASTM B695, type II, class 5.
N	Steel (sizes -3, -4, and -5)	NAVAIR TCP in accordance with MIL-DTL-81706, type 2, class A.
-R	Steel (sizes -3, -4, and -5)	Zinc plating in accordance with ASTM B633; type VI, Fe/Zn 5.
-S	Corrosion resistant steel (sizes -3, -4, and -5)	No additional finish. Passivation in accordance with SAE-AMS2700, method 2.
-T 3/	Titanium (all sizes)	Annealed
-V	Steel (sizes -3, -4, and -5)	Zinc-nickel in accordance with SAE-AMS2417, type 1.
-Z	Steel (sizes -3, -4, and -5)	Zinc any type above PIN code H, J, R, V
-ZN	Steel (sizes -3, -4, and -5)	Zinc any type above PIN code H, J, R, V with trivalent chromium pretreatment (TCP) in accordance with MIL-DTL-81706, type 2, class 1A.

1/ Shall be capable of withstanding minimum of 96 hours salt spray.
2/ Hexavalent chromium free.
3/ Not to be used on oxygen systems.

Guidance on use of alternative parts with less hazardous or nonhazardous materials. This specification provides for a number of alternative plating materials via the PIN. Users should select the PIN with the least hazardous material that meets the form, fit and function requirements of their application.

Amendment notations. The margins of this specification are marked with vertical lines to indicate modifications generated by this amendment. This was done as a convenience only and the Government assumes no liability whatsoever for any inaccuracies in these notations. Bidders and contractors are cautioned to evaluate the requirements of this document based on the entire content irrespective of the marginal notations.

Referenced documents. In addition to MIL-DTL-83798, this document references the following:

MIL-A-8625	SAE-AMS-C-81562
MIL-DTL-16232	SAE-AMS-QQ-P-416
MIL-DTL-81706	SAE-AMS2700
ASTM B633	SAE-AMS2417
ASTM B695	SAE-AS1043
ASTM F1136	SAE-AS33514

CONCLUDING MATERIAL

Custodians:
Army - AV
Navy - AS
Air Force - 99
DLA - CC

Review activities:
Army - AT
Navy - SA
Air Force - 71, 85

Preparing activity:
DLA - CC

(Project 4730-2011-102)

NOTE: The activities listed above were interested in this document as of the date of this document. Since organizations and responsibilities can change, you should verify the currency of the information above using the ASSIST Online database at https://assist.daps.dla.mil.