INCH-POUND

MIL-DTL-83796/5D
w/AMENDMENT 1
16 December 2014
SUPERSEDING
MIL-DTL-83796/5D
6 August 2014

DETAIL SPECIFICATION SHEET

HOSE ASSEMBLY, RUBBER, LIGHTWEIGHT, MEDIUM PRESSURE, FIELD ATTACHABLE END FITTINGS, FLARE TO FLANGE

This specification is approved for use by all
Departments and Agencies of the Department of Defense.

The requirements for acquiring the product described herein shall consist of this specification sheet and MIL-DTL-83796.

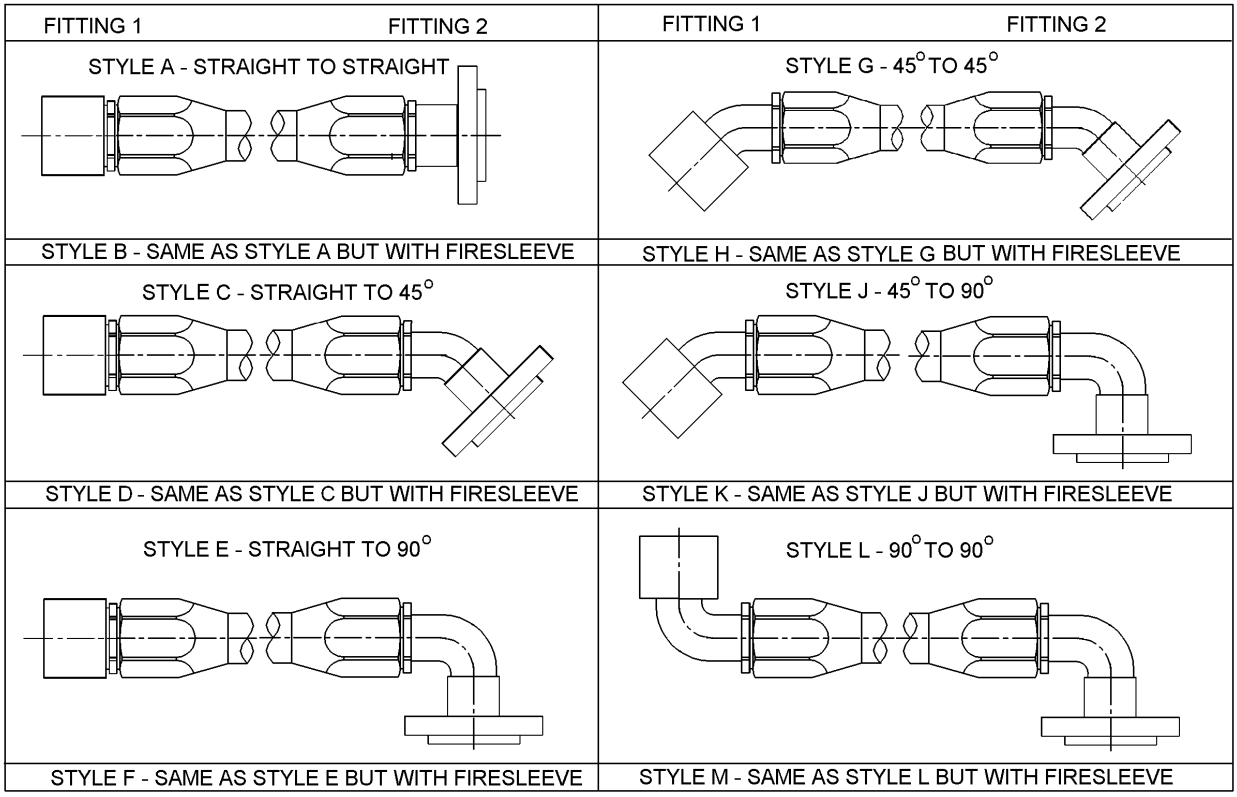

FIGURE 1. Hose assembly styles, field attachable fittings, flare-to-flange.

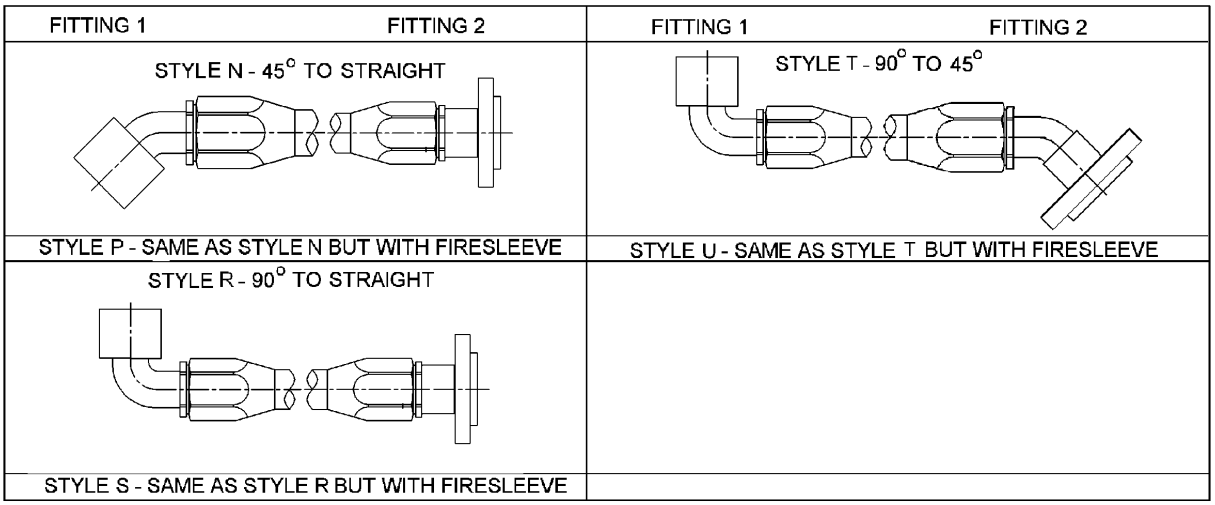

FIGURE 1. Hose assembly styles, field attachable fittings, flare-to-flange - Continued.

Hose cut-off factor (HCOF). HCOF is calculated as shown in table I.

TABLE I. Hose assembly, field attachable fittings, HCOF, styles A thru U.

Style	Fitting ends MIL-DTL-83798		MIL-DTL-83797 HCOF 1/ inches verses hose dash size number						
	Fitting 1	Fitting 2	-08	-10	-12	-16	-20	-24	-32
A and B	M83798/1	M83798/7	2.12	2.19	2.36	2.80	3.38	3.30	3.78
C and D	M83798/1	M83798/8	2.19	2.38	2.58	3.21	3.65	3.99	4.61
E and F	M83798/1	M83798/9	2.12	2.32	2.70	3.27	3.77	4.17	4.90
G and H	M83798/2	M83798/8	2.63	2.75	3.29	3.90	4.42	4.82	5.47
J and K	M83798/2	M83798/9	2.46	2.71	3.31	3.96	4.54	5.00	5.76
L and M	M83798/3	M83798/9	2.30	2.54	3.18	3.86	4.46	4.94	5.72
N and P	M83798/2	M83798/7	2.46	2.58	2.97	3.48	3.98	4.13	4.64
R and S	M83798/3	M83798/7	2.30	2.41	2.84	3.38	3.90	4.07	4.60
T and U	M83798/3	M83798/8	2.37	2.58	3.16	3.80	4.34	4.76	6.43

1/ Example of HOCF: for a -08, ½ hose OD, 20-1/2 inch assembly length, style A, the bulk hose length = 20.50 - the HCOF = 20.50 -2.12 = 18.38. Bulk hose length required is 18.38 inches.

Hose assembly length. The length is calculated as shown on figure 2.

Hose assembly elbow fitting drop height. Elbow fitting drop height B and C is calculated as shown on figure 2. Drop height dimensions for B and C can be found in the applicable MIL-DTL-83798 slash sheet as specified in table I herein.

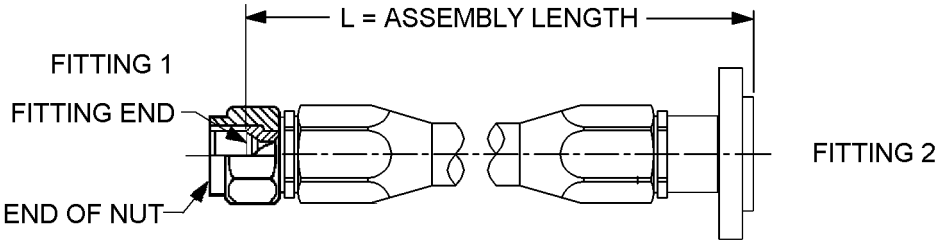

STYLE A or B

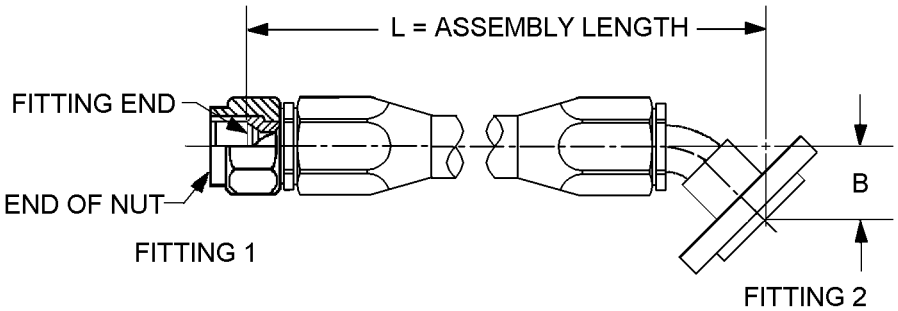

STYLE C or D

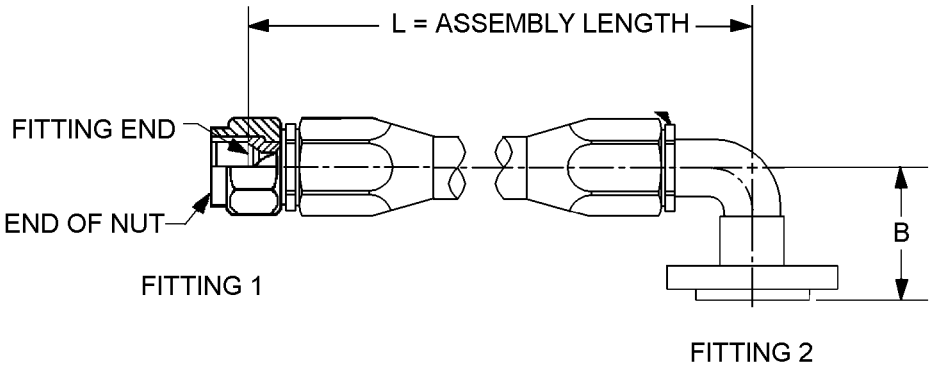

STYLE E or F

FIGURE 2. Hose assembly dimensions.

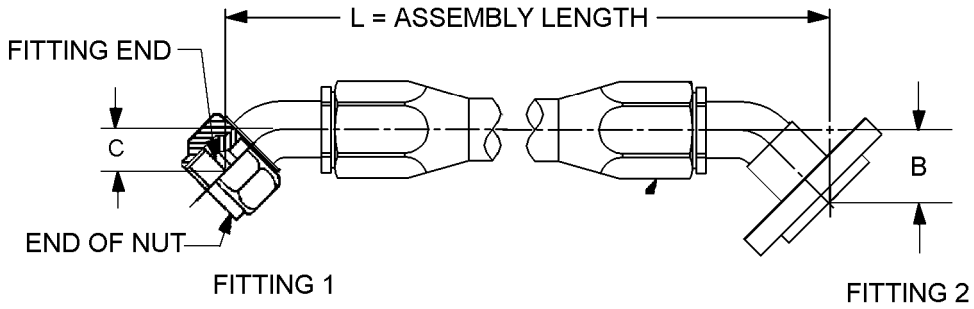

STYLE G or H

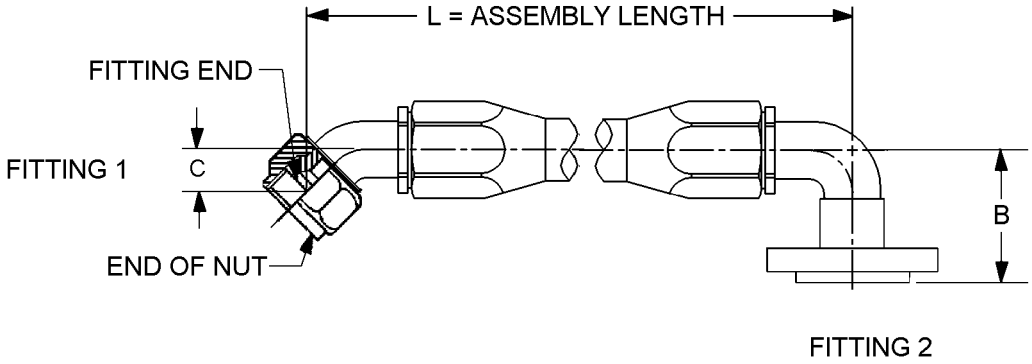

STYLE J or K

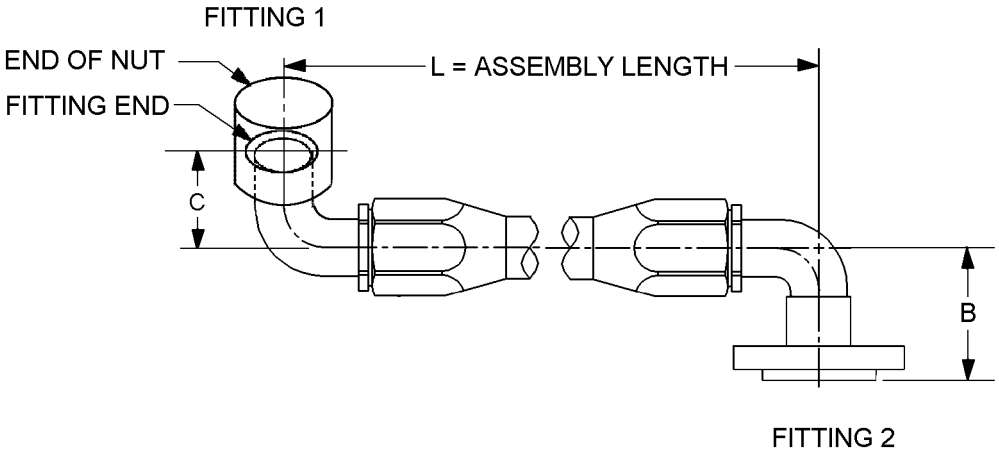

STYLE L or M

FIGURE 2. Hose assembly dimensions - Continued.

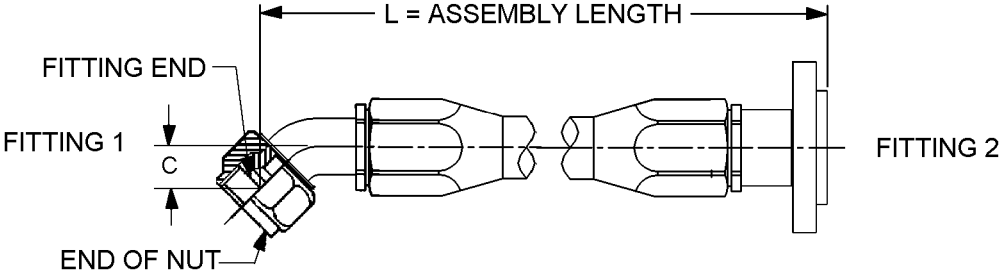

STYLE N or P

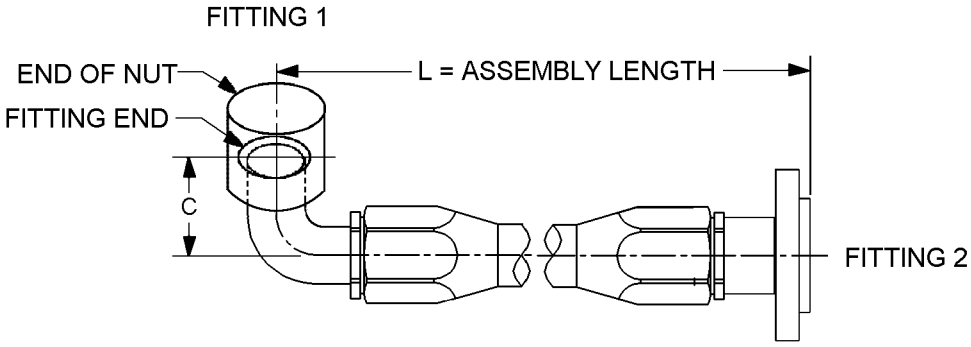

STYLE R or S

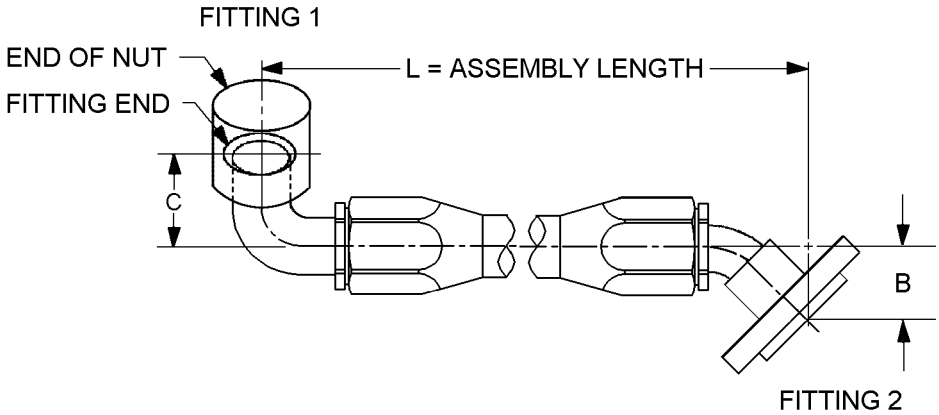

STYLE T or U

FIGURE 2. Hose assembly dimensions - Continued.

NOTES:

1. For straight fitting end to straight flange hose assembly types the length “L” is to be measured between straight fitting end along a straight line parallel to hose, with hose laid out horizontally and straight, to front of straight flange.
2. For straight fitting end to 45° flange hose types the length “L” is to be measured between straight fitting end along a straight line parallel to hose, with hose laid out horizontally and straight, to front edge of 45° flange.
3. For straight fitting end to 90° flange hose types the length “L” is to be measured between straight fitting end along a straight line parallel to hose, with hose laid out horizontally and straight, to the center line of the 90° flange.
4. For 90° fitting end to 90° flange hose assembly types the length “L” is to be measured between center line of 90° fitting end along a straight line parallel to hose, with hose laid out horizontally and straight, to the center line of the 90° flange.

FIGURE 2. Hose assembly dimensions - Continued.

Angular displacement. Angular displacement shall be as shown on figure 3.

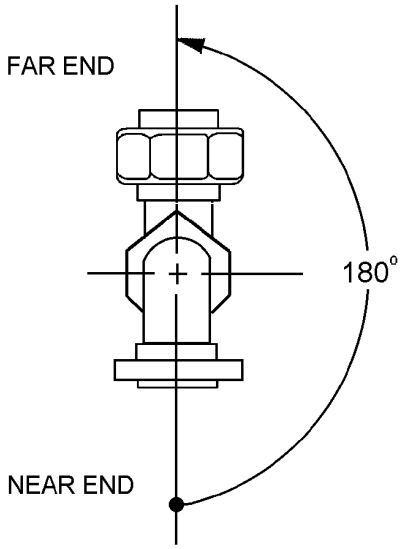

NOTES:

1. Angular displacement for hose assemblies with elbow fittings on both ends shall have the angular displacement between elbows, measured counter-clockwise from the centerline of the nearest fitting, positioned at six-o’ clock, to the centerline of the other fitting (see SAE-J517).
2. The near end of the connector shall be put in numerical order relative to the far end (see table I). Example: Near end adapter 45°, far end 90°.
3. Angular displacement shall be measured in degrees with a tolerance of ± 3° for lengths up to 2 feet (61 cm) and ± 5° for all lengths over 2 feet (61 cm).
4. The angular displacement shall be expressed in two digits number of degrees divided by 5, example 50°/5 = 10.
5. Making the angular determination in the wrong direction will result in an unacceptable part.

FIGURE 3. Elbow fitting angular alignment.

REQUIREMENTS

Hose assemblies shall be as specified on figures 1, 2, and 3.

Fitting end shall mate with SAE-AS4395 and fitting flange shall mate with MS20756. Flange installation shall be in accordance with MS33786 as applicable.

Hose assembly length tolerance shall be in accordance with MIL-DTL-83796.

Size codes shall be as specified in table II. Flange fittings are not available for sizes -03, -04, -05, and -06.

TABLE II. Size code. 1/ 2/

Dash number		-08	-10	-12	-16	-20	-24	-32
Size code		H	J	K	M	N	P	R
Hose OD reference	Inches fraction	1/2	5/8	3/4	1	1 1/4	1 1/2	2
	Inches decimal	.500	.625	.750	1.000	1.250	1.500	2.000
	mm	12.70	15.88	19.05	25.40	31.75	38.10	50.80

1/ Dimensions are in inches.
2/ Metric equivalents are given for information only.

Materials and finishes shall be in accordance with MIL-DTL-83796 and table III.

TABLE III. Material and finish code.

Material and finish code	Material	Plating finish
Blank	Aluminum	Anodize in accordance with MIL-A-8625, type II
T	Titanium 1/	Anodized in accordance with SAE-AMS2488, type 2 or fluoride phosphated in accordance with SAE-AMS2486

1/ Titanium shall not be used on potable water or oxygen systems.

PIN example:

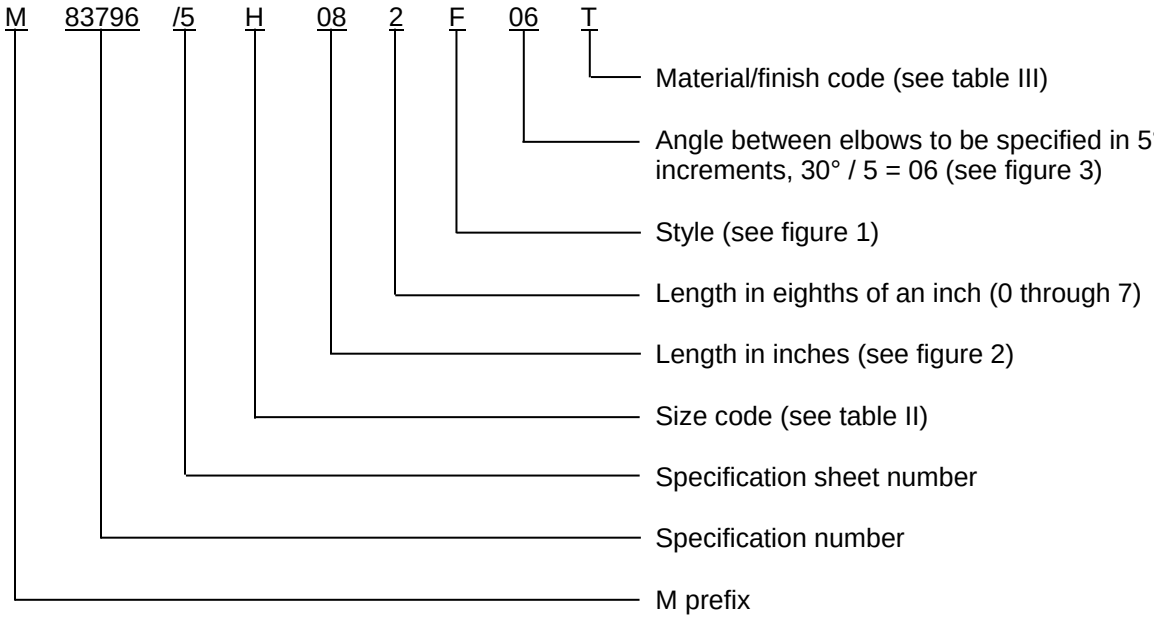

M83796/5H082F06T indicates - Hose assembly for 1/2 inch hose OD, 8 1/4 inches in length, style F, 30° between elbows, titanium alloy.

Amendment notations. The margins of this specification are marked with vertical lines to indicate modifications generated by this amendment. This was done as a convenience only and the Government assumes no liability whatsoever for any inaccuracies in these notations. Bidders and contractors are cautioned to evaluate the requirements of this document based on the entire content irrespective of the marginal notations.

Referenced documents. In addition to MIL-DTL-83796, this document references the following:

MIL-A-8625	SAE-AMS2486
MIL-DTL-83797	SAE-AMS2488
MIL-DTL-83798	SAE-AS4395
MS20756	SAE-J517
MS33786	

CONCLUDING MATERIAL

Custodians:
Army - AV
Navy - AS
Air Force - 99
DLA - CC

Preparing activity:
DLA - CC

(Project 4720-2014-053)

Review activities:
Army - AT
Navy - MC, SA, SH
Air Force - 71, 85

NOTE: The activities listed above were interested in this document as of the date of this document. Since organizations and responsibilities can change, you should verify the currency of the information above using the ASSIST Online database at https://assist.dla.mil.