INCH-POUND

MIL-DTL-83796/3C
w/AMENDMENT 1
16 December 2014
SUPERSEDING
MIL-DTL-83796/3C
6 August 2014

DETAIL SPECIFICATION SHEET

HOSE ASSEMBLY, RUBBER, LIGHTWEIGHT, MEDIUM PRESSURE, FIELD ATTACHABLE END FITTINGS, FLARELESS TO FLARELESS

This specification is approved for use by all
Departments and Agencies of the Department of Defense.

The requirements for acquiring the product described herein shall consist of this specification sheet and MIL-DTL-83796.

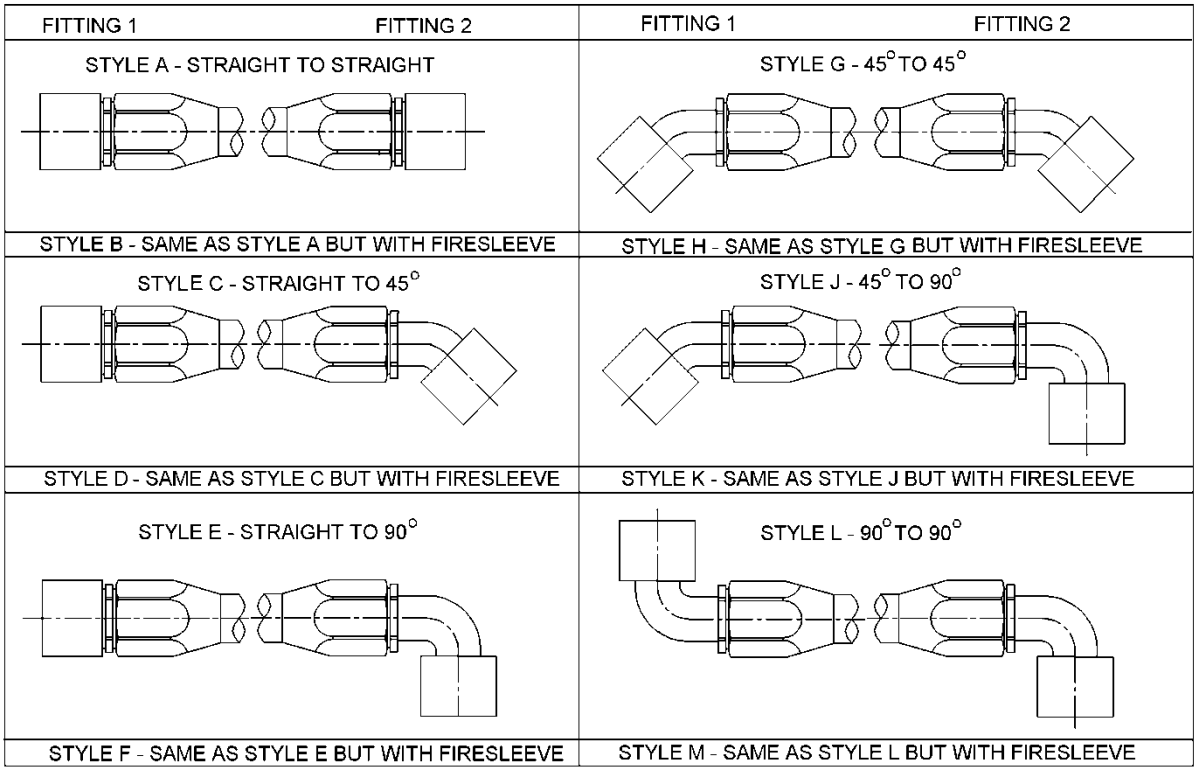

FIGURE 1. Hose assembly styles, field attachable fittings, flareless-to-flareless.

Hose assembly elbow fitting drop height. Elbow fitting drop height, A and B as shown on figure 2, are as specified in the applicable fitting specification sheet (see table I).

TABLE I. Hose assembly, field attachable fittings, HCOF, styles A thru M.

Style	Fitting ends MIL-DTL-83798		MIL-DTL-83797 hose cut off factor (HCOF) 1/ inches verses hose dash size number										
	Fitting 1	Fitting 2	-03	-04	-05	-06	-08	-10	-12	-16	-20	-24	-32
A and B	M83798/4	M83798/4	1.88	1.78	1.84	2.08	2.38	2.56	2.74	3.20	3.60	4.14	4.92
C and D	M83798/4	M83798/5	2.03	2.06	2.17	2.40	2.66	2.91	3.27	3.82	4.30	4.89	5.71
E and F	M83798/4	M83798/6	1.73	1.83	1.90	2.11	2.34	2.55	2.96	3.53	4.03	4.64	5.32
G and H	M83798/5	M83798/5	2.18	2.34	2.50	2.72	2.94	3.26	3.80	4.44	5.00	5.64	6.50
J and K	M83798/5	M83798/6	1.88	2.11	2.23	2.43	2.62	2.90	3.49	4.15	4.73	5.29	6.11
L and M	M83798/6	M83798/6	1.58	1.88	1.96	2.14	2.30	2.54	3.18	3.86	4.46	4.94	5.72

1/ Example of hose cut-off factor: for a -04, 1/4 hose OD, 18-1/2 assembly length, style D, the bulk hose length = 18.50 - the HCOF = 18.50 -2.06 = 16.44. Bulk hose length required is 16.44.

Hose assembly length. The hose assembly length is calculated as shown on figure 2.

Hose assembly elbow fitting drop height. Elbow fitting drop height B and C is calculated as shown on figure 2. Drop height dimensions for B and C can be found in the applicable MIL-DTL-83798 slash sheet as specified in table I herein.

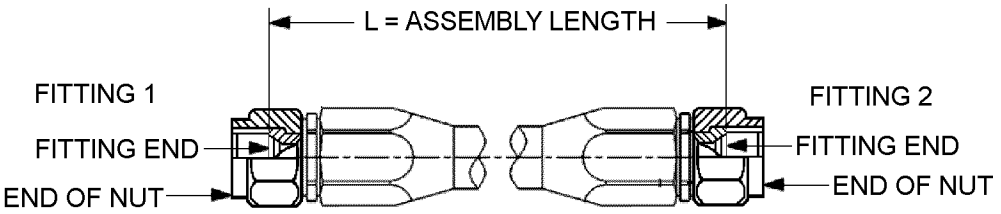

STYLE A or B

FIGURE 2. Hose assembly dimensions.

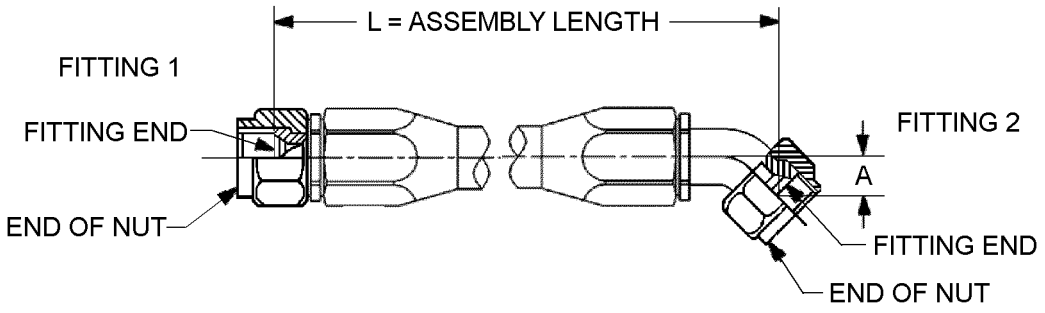

STYLE C or D

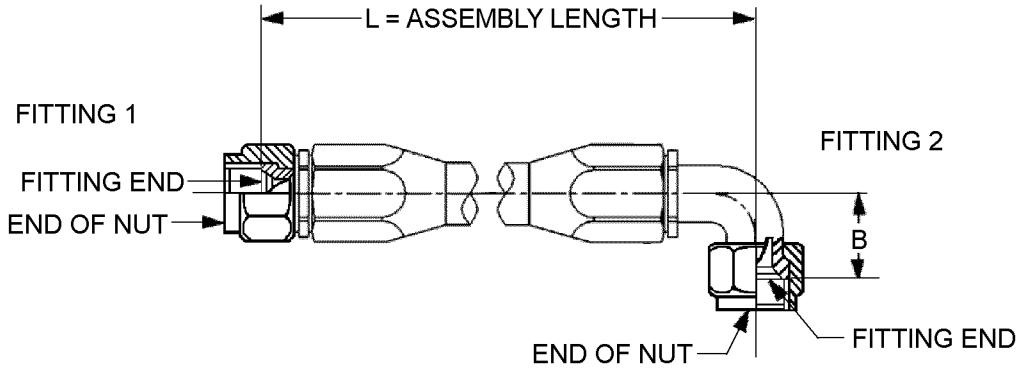

STYLE E or F

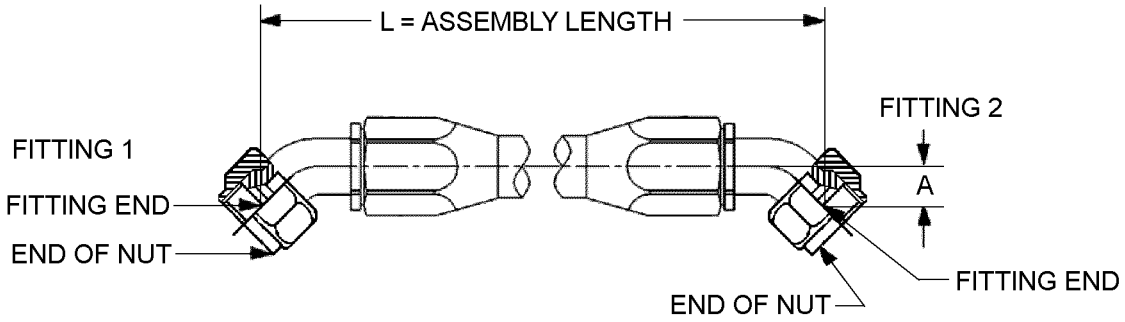

STYLE G or H

FIGURE 2. Hose assembly dimensions - Continued.

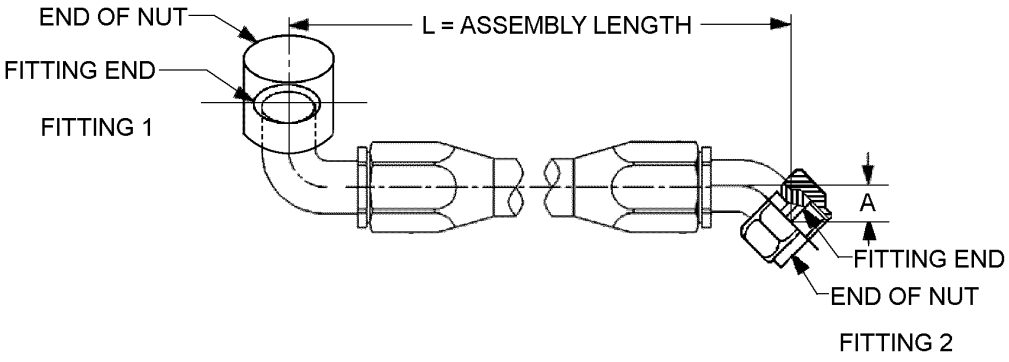

STYLE J or K

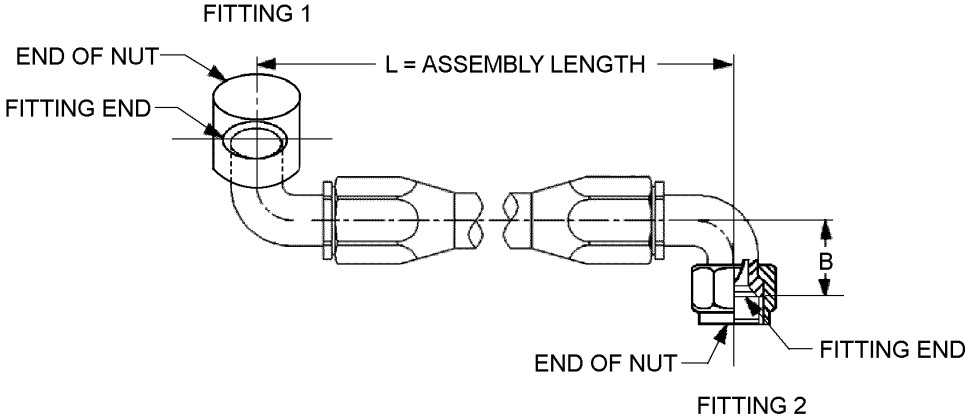

STYLE L or M

NOTES:

1. For straight hose assembly types the length “L” is to be measured between straight fitting end along a straight line parallel to hose, with hose laid out horizontally and straight, to straight fitting end.
2. For straight and 45° hose assembly types the length “L” is to be measured between sealing surface of fitting end along a straight line parallel to hose, with hose laid out horizontally and straight, to center line of 45° fitting end.
3. For straight and 90° hose assembly types the length “L” is to be measured between straight fitting end along a straight line parallel to hose, with hose laid out horizontally and straight, to center line of 90° fitting.
4. 45° and 90° hose assembly types the length “L” is to be measured between center line of 45° fitting end along a straight line parallel to hose, with hose laid out horizontally and straight, to center line of 90° fitting.
5. 90° hose assembly types the length “L” is to be measured between center line of 90° fitting end along a straight line parallel to hose, with hose laid out horizontally and straight, to center line of 90° fitting end.

FIGURE 2. Hose assembly dimensions - Continued.

Angular displacement. Angular displacement shall be as shown on figure 3.

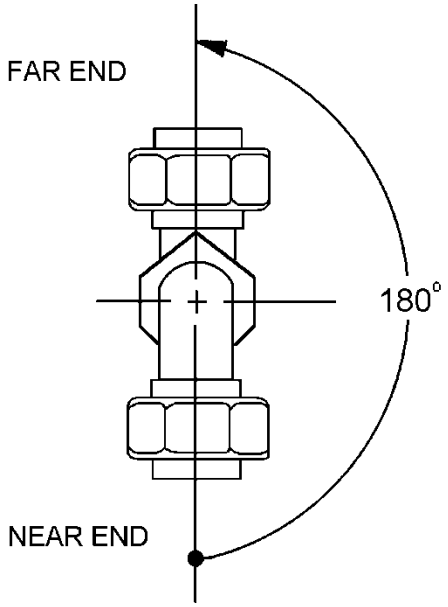

NOTES:

1. Angular displacement for hose assemblies with elbow fittings on both ends shall have the angular displacement between elbows, measured counter-clockwise from the centerline of the nearest fitting, positioned at six-o' clock, to the centerline of the other fitting (see SAE-J517).
2. The near end of the connector shall be put in numerical order relative to the far end (see table I). Example: Near end adapter 45°, far end 90°.
3. Angular displacement shall be measured in degrees with a tolerance of ± 3° for lengths up to 2 feet (61 cm) and ± 5° for all lengths over 2 feet (61 cm).
4. The angular displacement shall be expressed in two digits number of degrees divided by 5, example 120°/5 = 24.
5. Making the angular determination in the wrong direction will result in an unacceptable part.

FIGURE 3. Elbow fitting drop height and angular alignment.

REQUIREMENTS

Hose assemblies shall be specified on figures 1, 2, and 3.

Fittings shall mate with parts in accordance with SAE-AS33514.

Hose assembly length tolerance shall be in accordance with MIL-DTL-83796.

Size codes shall be as specified in table II.

TABLE II. Size code. 1/ 2/

Dash number		-03	-04	-05	-06	-08	-10	-12	-16
Size code		B	E	F	G	H	J	K	M
Hose OD reference	Inches fraction	3/16	1/4	5/16	3/8	1/2	5/8	3/4	1
	Inches decimal	.188	.250	.313	.375	.500	.625	.750	1.000
	mm	4.78	6.35	7.95	9.53	12.70	15.88	19.05	25.40

Dash number		-20	-24	-32
Size code		N	P	R
Hose OD reference	Inches fraction	1 1/4	1 1/2	2
	Inches decimal	1.250	1.500	2.000
	mm	31.75	38.10	50.80

1/ Dimensions are in inches.
2/ Metric equivalents are given for information only.

Materials and finishes for hose fittings shall be in accordance with MIL-DTL-83798 and table III.

TABLE III. Nut and nipple material and finish code. 1/

Material and finish code	Material	Plating Finish
Blank	Steel (sizes -3, -4, and -5)	Cadmium plating in accordance with SAE-AMS-C-81562, type II, class 3 or SAE-AMS-QQ-P-416, type II, class 2. 2/
	Aluminum (sizes -6 and above)	Anodize in accordance with MIL-A-8625, type II
A	Steel (sizes -3, -4, and -5)	Aluminum-nickel in accordance with ASTM F1136/F1136M, grade 3, NC
B	Aluminum (sizes -6 and above)	Anodize above with NAVAIR trivalent chromium pretreatment (TCP) in accordance with MIL-DTL-81706, type II, class 1A.
CN	Steel (sizes -3, -4, and -5)	Cadmium plating in accordance with SAE-AMS-C-81562, type II, class 3 or SAE-AMS-QQ-P-416, type II, class 2 with NAVAIR TCP in accordance with MIL-DTL-81706, type II, class 1A. 2/
H	Steel (sizes -3, -4, and -5)	Zinc phosphate finish in accordance MIL-DTL-16232 type Z, class1 3/
J	Steel (sizes -3, -4, and -5)	Zinc plating in accordance with ASTM B633; type II or III, Fe/Zn 5, or ASTM B695, type II, class 5
N	Steel (sizes -3, -4, and -5)	NAVAIR TCP above.
R	Steel (sizes -3, -4, and -5)	Zinc plating in accordance with ASTM B633; type VI, Fe/Zn 5.
S	Corrosion resistant steel	No additional finish. Passivation in accordance with SAE-AMS2700, method 2
T 2/	Titanium (all sizes)	Annealed
V	Steel (sizes -3, -4, and -5)	Zinc-nickel in accordance with SAE-AMS2417, type 1
Z	Zinc any type above	PIN code F, G, H, J, R, V
ZN	Zinc any type above	PIN code F, G, H, J, R, V with NAVAIR TCP in accordance with MIL-DTL-81706, type II, class 1A.

1/ Shall be capable of withstanding minimum of 96 hours salt spray.
2/ Cadmium and titanium shall not be used on potable water or oxygen systems.
3/ Hexavalent chromium free.

Trivalent wrenchability. When the finish has been damaged due to poor wrenchability, the surface of the connector shall be touched up using the brush plating process below. The term “trivalent wrenchability” is used to evaluate the ability of the finish to withstand abrasion from an excessive amount of wrenching.

a. Brush plating of hard chromium by electrodeposition shall be in accordance with SAE-AMS2451/5.
b. Brush plating of medium-hardness, low stress nickel by electrodeposition shall be in accordance with SAE-AMS2451/9.
c. Brush plating of NAVAIR TCP shall be in accordance with MIL-DTL-81706, type II, class 1A, material form 1 through 6, application method B. Example of a PIN: M817062A6B.

PIN example:

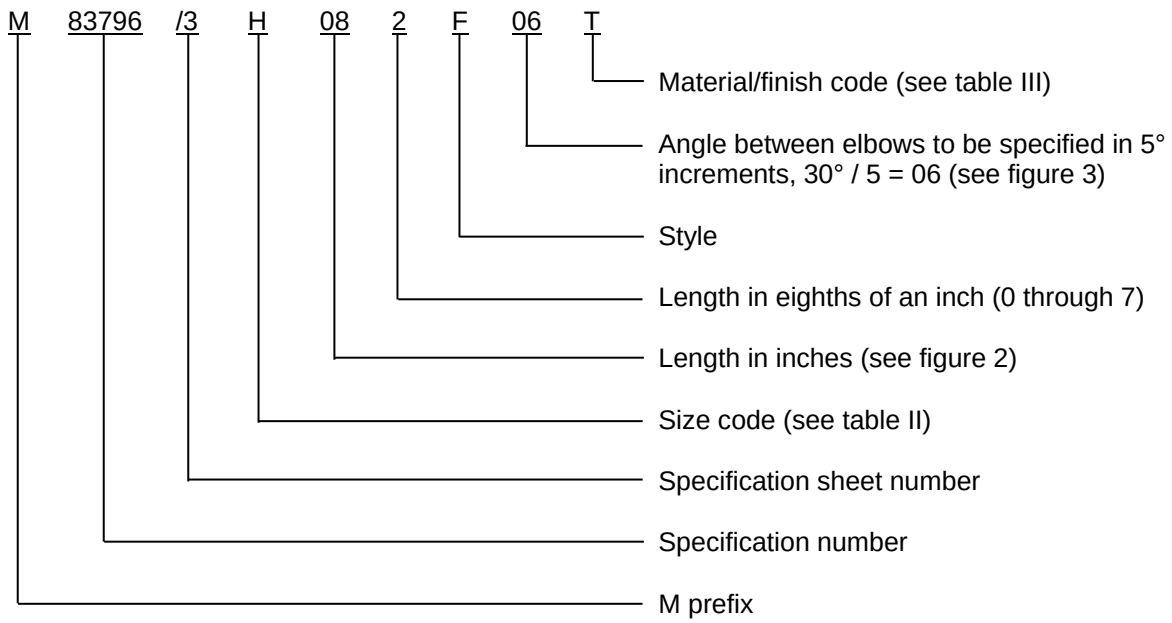

M83796/30H082F06T indicates - Hose assembly for 1/2 inch hose OD, 8 1/4 inches in length, style F, 30° between elbows, titanium alloy.

M83796/30H082F06S indicates - Hose assembly for 1/2 inch hose OD, 8 1/4 inches in length, style F, 30° between elbows, corrosion resistant steel.

Cadmium is not recommended. To the users of this document, it is recommended that the use of carbon steel material with cadmium plating be used only when other materials and finishes specified in this document cannot meet performance requirements.

Amendment notations. The margins of this specification are marked with vertical lines to indicate modifications generated by this amendment. This was done as a convenience only and the Government assumes no liability whatsoever for any inaccuracies in these notations. Bidders and contractors are cautioned to evaluate the requirements of this document based on the entire content irrespective of the marginal notations.

Referenced documents. In addition to MIL-DTL-83796, this document references the following:

MIL-A-8625	ASTM B695	SAE-AMS2451/9
MIL-DTL-16232	ASTM F1136/F1136M	SAE-AMS2700
MIL-DTL-81706	SAE-AMS2417	SAE-AS33514
MIL-DTL-83797	SAE-AMS-C-81562	SAE-J517
MIL-DTL-83798	SAE-AMS-QQ-P-416	
ASTM B633	SAE-AMS2451/5	

CONCLUDING MATERIAL

Custodians:
Army - AV
Navy - AS
Air Force - 99
DLA - CC

Preparing activity:
DLA - CC

(Project 4720-2014-051

Review activities:
Army - AT
Navy - MC, SA, SH
Air Force 71, 85

NOTE: The activities listed above were interested in this document as of the date of this document. Since organizations and responsibilities can change, you should verify the currency of the information above using the ASSIST Online database at https://assist.dla.mil.