INCH-POUND

MIL-DTL-83796/18A
26 April 2010
SUPERSEDING
MIL-DTL-83796/18
11 August 2008

DETAIL SPECIFICATION SHEET

HOSE ASSEMBLY, RUBBER, LIGHTWEIGHT, MEDIUM PRESSURE, INTERNAL SUPPORT COIL, FIELD ATTACHABLE END FITTINGS, FLANGE TO FLANGE

This specification is approved for use by all
Departments and Agencies of the Department of Defense.

The requirements for acquiring the product described herein shall consist of this specification sheet and MIL-DTL-83796.

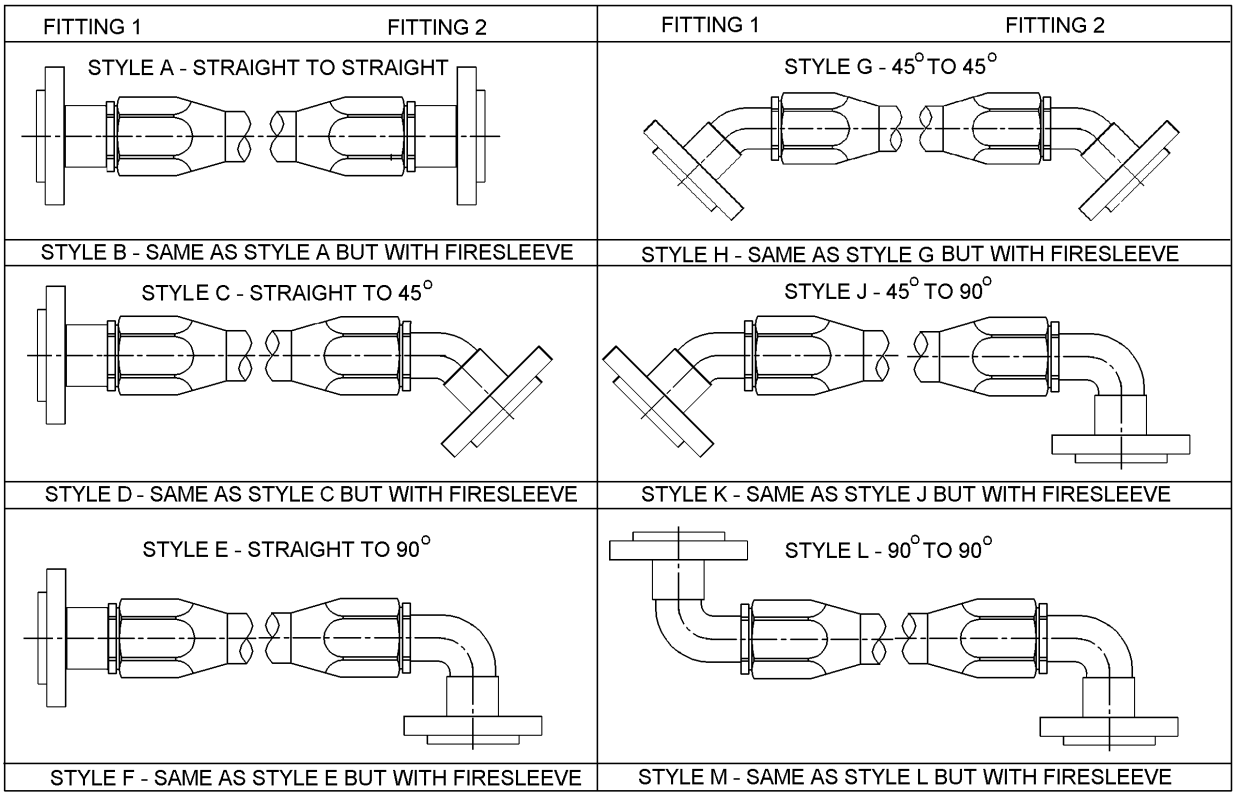

FIGURE 1. Hose assembly styles, field attachable fittings, flange to flange.

Hose cut-off factor (HCOF). HCOF is calculated as shown in table I.

TABLE I. Hose assembly, field attachable fittings, HCOF, styles A thru M.

Style	Fitting ends MIL-DTL-83798		MIL-DTL-83797 hose cut off factor (HCOF) 1/ inches verses hose dash size number						
	1	2	-08	-10	-12	-16	-20	-24	-32
A and B	M83798/7	M83798/7	2.30	2.28	2.50	2.92	3.54	3.20	3.48
C and D	M83798/7	M83798/8	2.37	2.45	2.82	3.33	3.38	3.89	4.31
E and F	M83798/7	M83798/9	2.30	2.41	2.84	3.39	4.00	4.07	4.60
G and H	M83798/8	M83798/8	2.44	2.62	3.14	3.74	4.22	4.58	5.14
J and K	M83798/8	M83798/9	2.37	2.58	3.16	3.80	4.34	4.76	5.43
L and M	M83798/9	M83798/9	2.30	2.54	3.18	3.86	4.46	4.94	5.72

1/ Example of HOCF: for a -08, ½ hose OD, 20-1/2 inch assembly length, style A, the bulk hose length = 20.50 - the HCOF = 20.50 -2.30 = 18.20. Bulk hose length required is 18.20 inches.

Hose assembly length. The hose assembly length is calculated as shown on figure 2.

Hose assembly elbow fitting drop height. Elbow fitting drop height B is calculated as shown on figure 2.

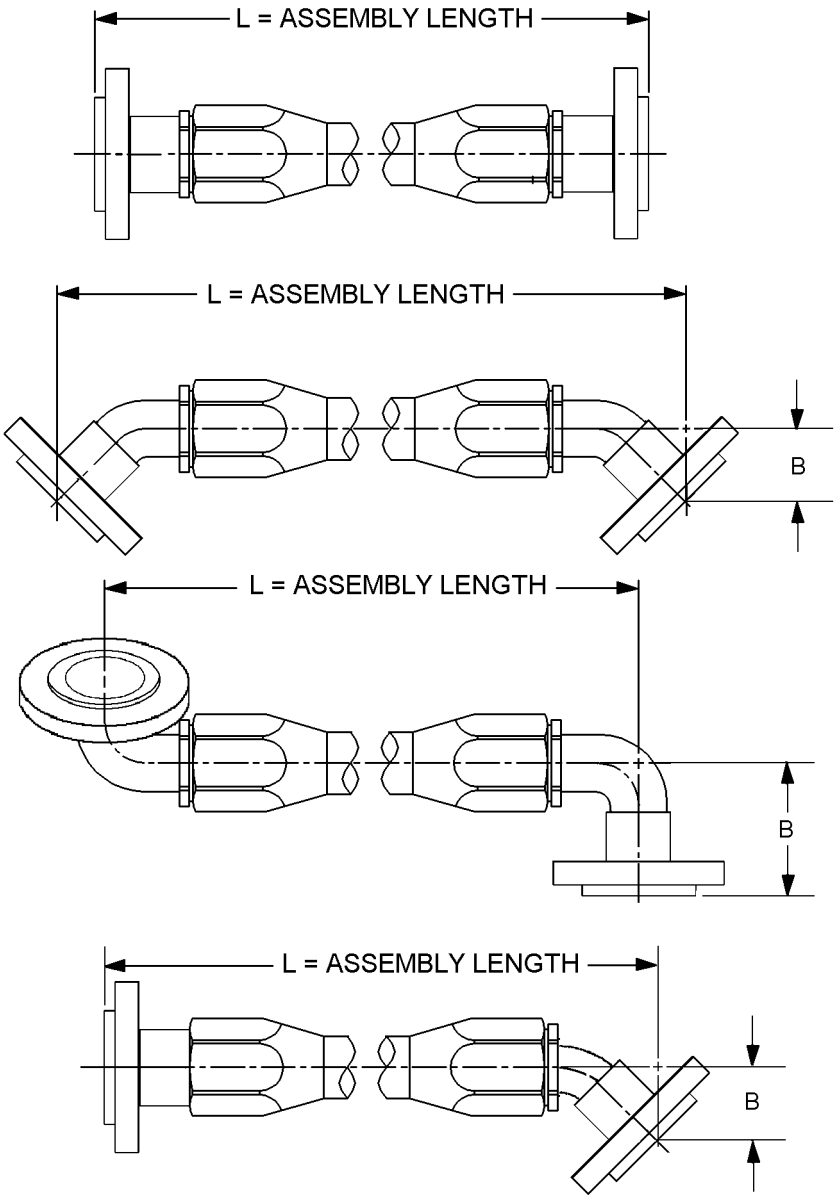

NOTES:
1. Drop height B can be found in the applicable MIL-DTL-83798 slash sheet specified in table I.
2. Hose length “L” is measured from one fitting end to another fitting end.

FIGURE 2. Hose assembly dimensions.

Angular displacement. Angular displacement shall be as shown on figure 3.

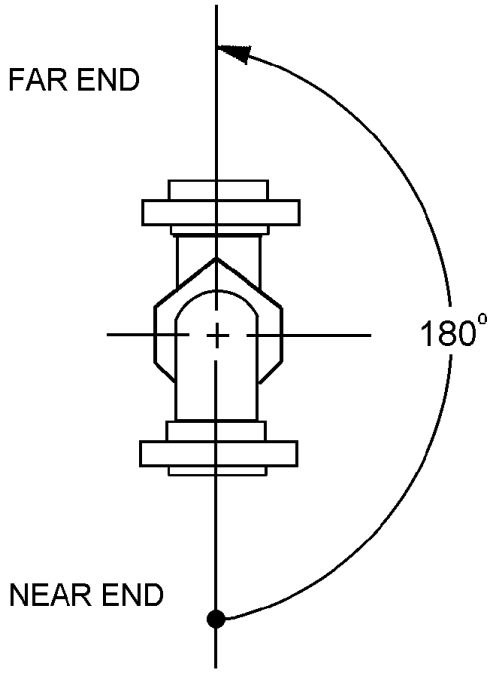

NOTES:

1. Angular displacement for hose assemblies with elbow fittings on both ends shall have the angular displacement between elbows, measured counter-clockwise from the centerline of the nearest fitting, positioned at six-o' clock, to the centerline of the other fitting (see SAE-J517).
2. The near end of the connector shall be put in numerical order relative to the far end (see table I). Example: Near end 45° flange, far end 90° flange.
3. Angular displacement shall be measured in degrees with a tolerance of ± 3° for lengths up to 2 feet (61 cm) and ± 5° for all lengths over 2 feet (61 cm).
4. The angular displacement shall be expressed in two digits number of degrees divided.
5. Making the angular determination in the wrong direction will result in an unacceptable part.

FIGURE 3. Elbow fitting angular alignment.

REQUIREMENTS

Hose assemblies shall be specified on figures 1, 2, and 3.

Fittings shall mate with parts in accordance with SAE-AS4395 and the mounting pad in accordance with MS33786, as applicable.

Hose assembly length tolerance shall be in accordance with MIL-DTL-83796.

Internal support coil. Internal support coil shall be in accordance with Defense Supply Center Columbus drawing 08001. Sleeves shall be spot welded to end of spring to prevent damage to ID of hose assembly.

Internal support coil length. The internal support coil length shall be the overall hose assembly length minus the sum of the overall lengths of each end fitting.

Size codes shall be as specified in table II. Flange fittings not available for sizes -03, -04, -05, and -06.

TABLE II. Size code. 1/ 2/

Dash number		-08	-10	-12	-16	-20	-24	-32
Size code		H	J	K	M	N	P	R
Hose OD reference	Inches fraction	1/2	5/8	3/4	1	1 1/4	1 1/2	2
	Inches decimal	.500	.625	.750	1.000	1.250	1.500	2.000
	mm	12.70	15.88	19.05	25.40	31.75	38.10	50.80

1/ Dimensions are in inches.
2/ Metric equivalents are given for information only.

Materials and finishes shall be in accordance with MIL-STD-83796 and in table III.

TABLE III. Material and finish code.

Part or Identifying Number code dash letter	Material	Plating Finish
Blank	Aluminum	Anodize in accordance with MIL-A-8625, type II
-T	Titanium	Anodized in accordance with SAE-AMS2488, type 2 or fluoride phosphated in accordance with SAE-AMS2486

PIN example:

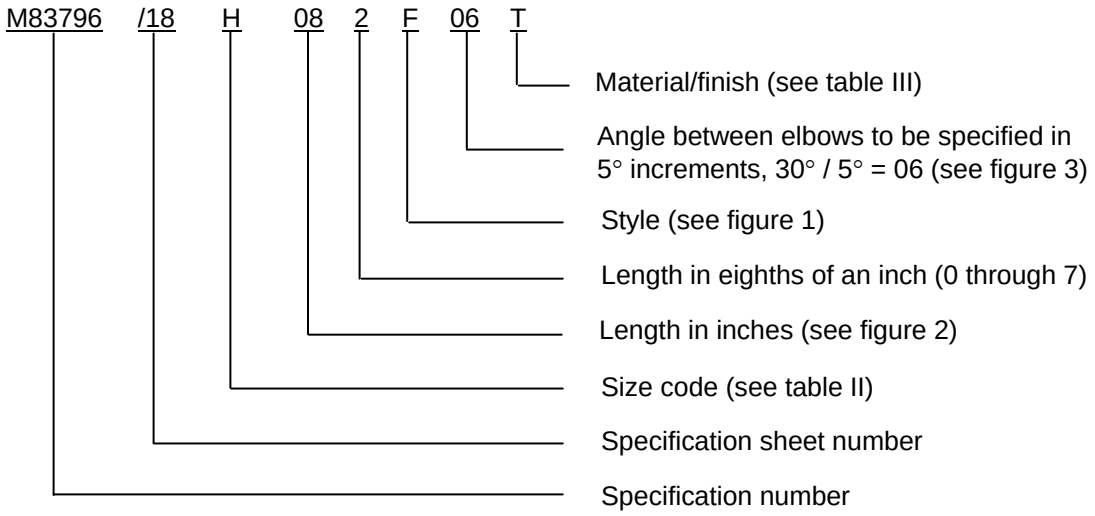

M83796/18H082F06T indicates - Hose assembly for 1/2 hose OD, 8 1/4 inches in length, style F, 30° between elbows, titanium alloy.

Changes from previous issues. Marginal notations are not used in this revision to identify changes with respect to the previous issue due to the extent of the changes.

Referenced documents. In addition to MIL-DTL-83796, this document references the following:

MIL-A-8625	SAE-AMS2486
MIL-DTL-83797	SAE-AMS2488
MIL-DTL-83798	SAE-AS4395
MS33786	SAE-J517
08001	

CONCLUDING MATERIAL

Custodians:
Army - AV
Navy - AS
Air Force - 99
DLA - CC

Review activities:
Army - AT
Navy - MC, SA
Air Force - 71, 85

Preparing activity:
DLA - CC

(Project 4720-2009-028)

NOTE: The activities listed above were interested in this document as of the date of this document. Since organizations and responsibilities can change, you should verify the currency of the information above using the ASSIST Online database at https://assist.daps.dla.mil.