INCH-POUND

MIL-DTL-83796/13
w/AMENDMENT 1
24 May 2012
SUPERSEDING
MIL-DTL-83796/13
11 August 2008

DETAIL SPECIFICATION SHEET

HOSE ASSEMBLY, RUBBER, LIGHTWEIGHT, MEDIUM PRESSURE, INTERNAL SUPPORT COIL, FIELD ATTACHABLE END FITTINGS, FLARELESS TO FLARELESS, WITH LOCKWIRE HOLE

This specification is approved for use by all
Departments and Agencies of the Department of Defense.

The requirements for acquiring the product described herein shall consist of this specification sheet and MIL-DTL-83796.

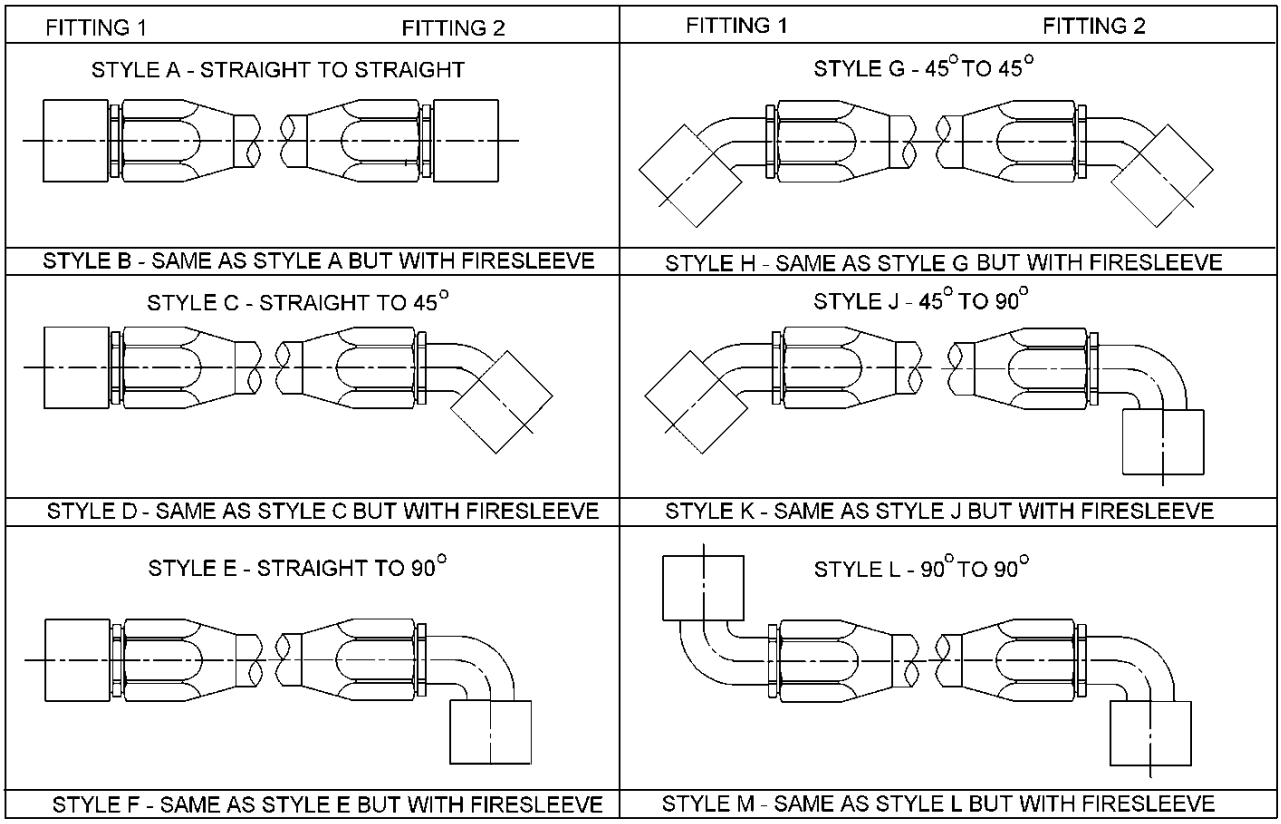

FIGURE 1. Hose assembly styles, field attachable fittings, flareless-to-flareless.

Hose assembly elbow fitting drop height. Elbow fitting drop height, A and B as shown on figure 2, are as specified in the applicable fitting specification sheet (see table I).

TABLE I. Hose assembly, field attachable fittings, HCOF, styles A thru M.

Style	Fitting ends MIL-DTL-83798		MIL-DTL-83797 hose cut off factor (HCOF) 1/ Inches verses hose dash size number										
	Fitting 1	Fitting 2	-3	-4	-5	-6	-8	-10	-12	-16	-20	-24	-32
A and B	M83798/4	M83798/4	1.88	1.78	1.84	2.08	2.38	2.56	2.74	3.20	3.60	4.14	4.92
C and D	M83798/4	M83798/5	2.03	2.06	2.17	2.40	2.66	2.91	3.27	3.82	4.30	4.89	5.71
E and F	M83798/4	M83798/6	1.73	1.83	1.90	2.11	2.34	2.55	2.96	3.53	4.03	4.64	5.32
G and H	M83798/5	M83798/5	2.18	2.34	2.50	2.72	2.94	3.26	3.80	4.44	5.00	5.64	6.50
J and K	M83798/5	M83798/6	1.88	2.11	2.23	2.43	2.62	2.90	3.49	4.15	4.73	5.29	6.11
L and M	M83798/6	M83798/6	1.58	1.88	1.96	2.14	2.30	2.54	3.18	3.86	4.46	4.94	5.72

1/ Example of hose cut-off factor: for a -6, 3/8 hose OD, 20-1/2 assembly length, style A, the bulk hose length = 20.50 - the HCOF = 20.50 -2.08 = 18.42. Bulk hose length required is 18.42 inches.

Hose assembly length. The hose assembly length is calculated as shown on figure 2.

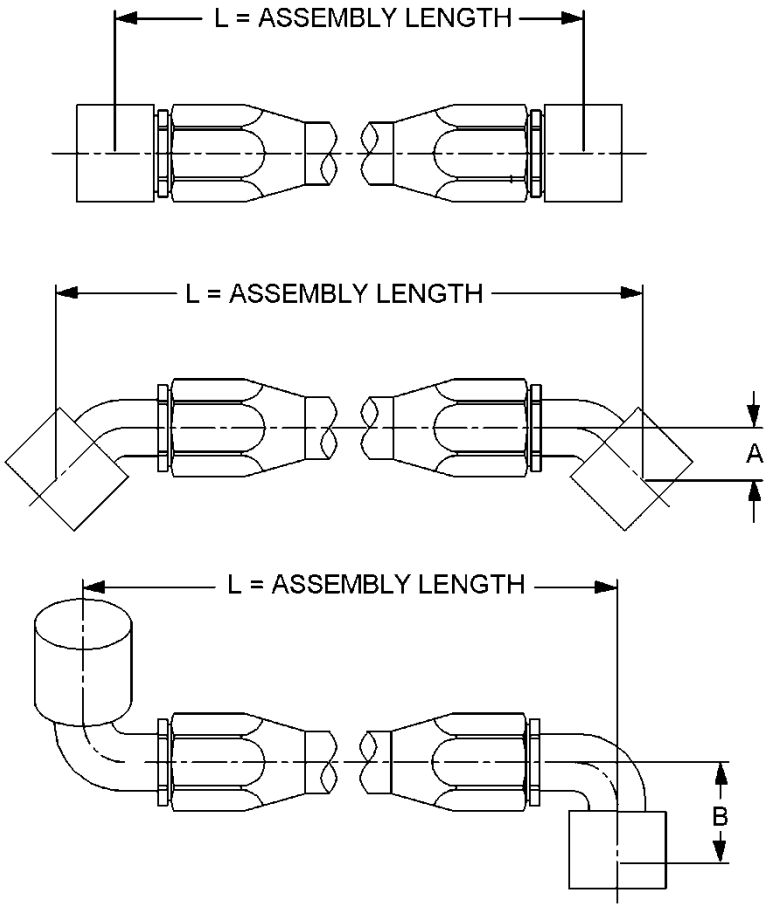

NOTES:
1. Elbow fitting drop height, A and B are as specified in the applicable fitting specification sheet (see table I).
2. Length “L” to be measured between centers of nipple ends along a straight line parallel to hose length with hose laid out horizontally and straight.

FIGURE 2. Hose assembly dimensions and elbow fitting drop height.

Angular displacement. Angular displacement shall be as shown on figure 3.

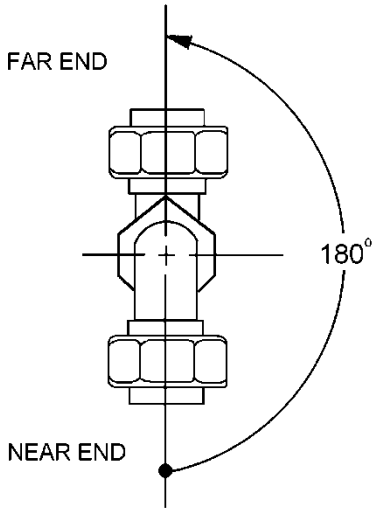

NOTES:

1. Angular displacement for hose assemblies with elbow fittings on both ends shall have the angular displacement between elbows, measured counter-clockwise from the centerline of the nearest fitting, positioned at six-o' clock, to the centerline of the other fitting (see SAE-J517).
2. The near end of the connector shall be put in numerical order relative to the far end (see table I). Example: Near end adapter 45°, far end 90°.
3. Angular displacement shall be measured in degrees with a tolerance of ± 3° for lengths up to 2 feet (61 cm) and ± 5° for all lengths over 2 feet (61 cm).
4. The angular displacement shall be expressed in two digits number of degrees divided.
5. Making the angular determination in the wrong direction will result in an unacceptable part.

FIGURE 3. Elbow fitting drop height and angular alignment.

REQUIREMENTS

Hose assemblies shall be as specified on figures 1, 2, and 3.

Fittings shall mate with parts in accordance with SAE-AS33514.

Hose assembly length tolerance shall be in accordance with MIL-DTL-83796.

Internal support coil. Internal support coil shall be in accordance with Defense Supply Center Columbus drawing 08001.

Support coil length. The support coil length shall be the overall hose assembly length minus the sum of the overall lengths of each end fitting.

Size codes shall be as specified in table II.

TABLE II. Size code. 1/ 2/

Dash number		-03	-04	-05	-06	-08	-10	-12	-16
Size code		B	E	F	G	H	J	K	M
Hose OD reference	Inches fraction	3/16	1/4	5/16	3/8	1/2	5/8	3/4	1
	Inches decimal	.188	.250	.313	.375	.500	.625	.750	1.000
	mm	4.78	6.35	7.95	9.53	12.70	15.88	19.05	25.40

Dash number		-20	-24	-32
Size code		N	P	R
Hose OD reference	Inches fraction	1 1/4	1 1/2	2
	Inches decimal	1.250	1.500	2.000
	mm	31.75	38.10	50.80

1/ Dimensions are in inches.
2/ Metric equivalents are given for information only.

Materials and finishes shall be in accordance with MIL-DTL-83796 and in table III.

TABLE III. Nut and nipple material and finish code. 1/

PIN code dash letter 2/	Material	Plating Finish
Blank	Steel (sizes -3, -4, and -5)	Cadmium plating in accordance with SAE-AMS-C-81562, type II, class 3 or SAE-AMS-QQ-P-416, type II, class 2.
	Aluminum (sizes -6 and above)	Anodize in accordance with MIL-A-8625, type II
-A	Steel (sizes -3, -4, and -5)	Aluminum-nickel in accordance with ASTM F1136/F1136M, grade 3, NC
-B	Aluminum (sizes -6 and above)	Anodize above with NAVAIR trivalent chromium pretreatment (TCP) in accordance with MIL-DTL-81706, type 2, class 1A.
-CN	Steel (sizes -3, -4, and -5)	Cadmium plating in accordance with SAE-AMS-C-81562, type II, class 3 or SAE-AMS-QQ-P-416, type II, class 2 with NAVAIR TCP in accordance with MIL-DTL-81706, type 2, class 1A.
-H	Steel (sizes -3, -4, and -5)	Zinc phosphate finish in accordance MIL-DTL-16232 type Z, class1 3/
-J	Steel (sizes -3, -4, and -5)	Zinc plating in accordance with ASTM B633; type II or III, Fe/Zn 5, or ASTM B695, type II, class 5
-N	Steel (sizes -3, -4, and -5)	NAVAIR TCP above.
-R	Steel (sizes -3, -4, and -5)	Zinc plating in accordance with ASTM B633; type VI, Fe/Zn 5.
-S	Corrosion resistant steel	No additional finish. Passivation in accordance with SAE-AMS2700, method 2
-T	Titanium (all sizes) 4/	Annealed
-V	Steel (sizes -3, -4, and -5)	Zinc-nickel in accordance with SAE-AMS2417, type 1
-Z	Zinc any type above	PIN code F, G, H, J, R, V
-ZN	Zinc any type above	PIN code F, G, H, J, R, V with NAVAIR TCP in accordance with MIL-DTL-81706, type 2, class 1A.

1/ Shall be capable of withstanding minimum of 96 hours salt spray.
2/ Part or Identifying Number (PIN).
3/ Hexavalent chromium free.
4/ Not for use in oxygen systems.

PIN example:

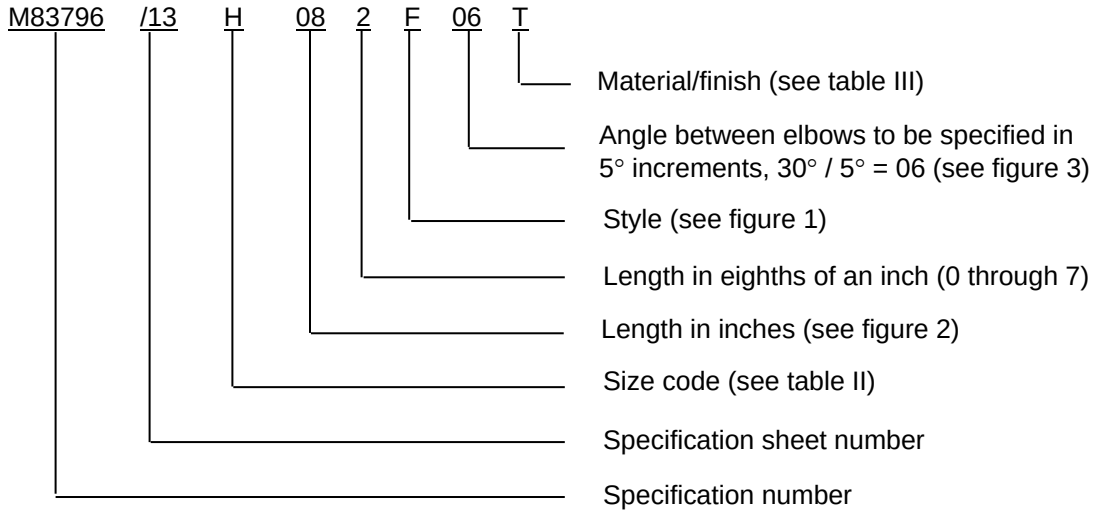

M83796/13H082F06T indicates - Hose assembly for 1/2 hose OD, 8 1/4 inches in length, style F, 30° between elbows, titanium alloy.

Referenced documents. In addition to MIL-DTL-83796, this document references the following:

MIL-A-8625	ASTM B695
MIL-DTL-16232	ASTM F1136/F1136M
MIL-DTL-81706	SAE-AMS-C-81562
MIL-DTL-83797	SAE-AMS-QQ-P-416
MIL-DTL-83798	SAE-AMS2417
08001	SAE-AMS2700
ASTM B633	SAE-AS33514
	SAE-J517

CONCLUDING MATERIAL

Custodians:
Army - AV
Navy - AS
Air Force - 99
DLA - CC

Review activities:
Army - AT
Navy - MC, SA
Air Force - 71, 85

Preparing activity:
DLA - CC

(Project 4720-2012-007)

NOTE: The activities listed above were interested in this document as of the date of this document. Since organizations and responsibilities can change, you should verify the currency of the information above using the ASSIST Online database at https://assist.daps.dla.mil.