INCH-POUND

MIL-DTL-83734/6F
w/AMENDMENT 1
13 July 2012
SUPERSEDING
MIL-DTL-83734/6F
30 April 2007

DETAIL SPECIFICATION SHEET

SOCKETS, PLUG-IN ELECTRONIC COMPONENTS,
(FOR 22 PIN DUAL-IN-LINE PACKAGES)

This specification is approved for use by all Departments and Agencies of the Department of Defense.

The requirements for acquiring the product described herein shall consist of this specification sheet and MIL-DTL-83734.

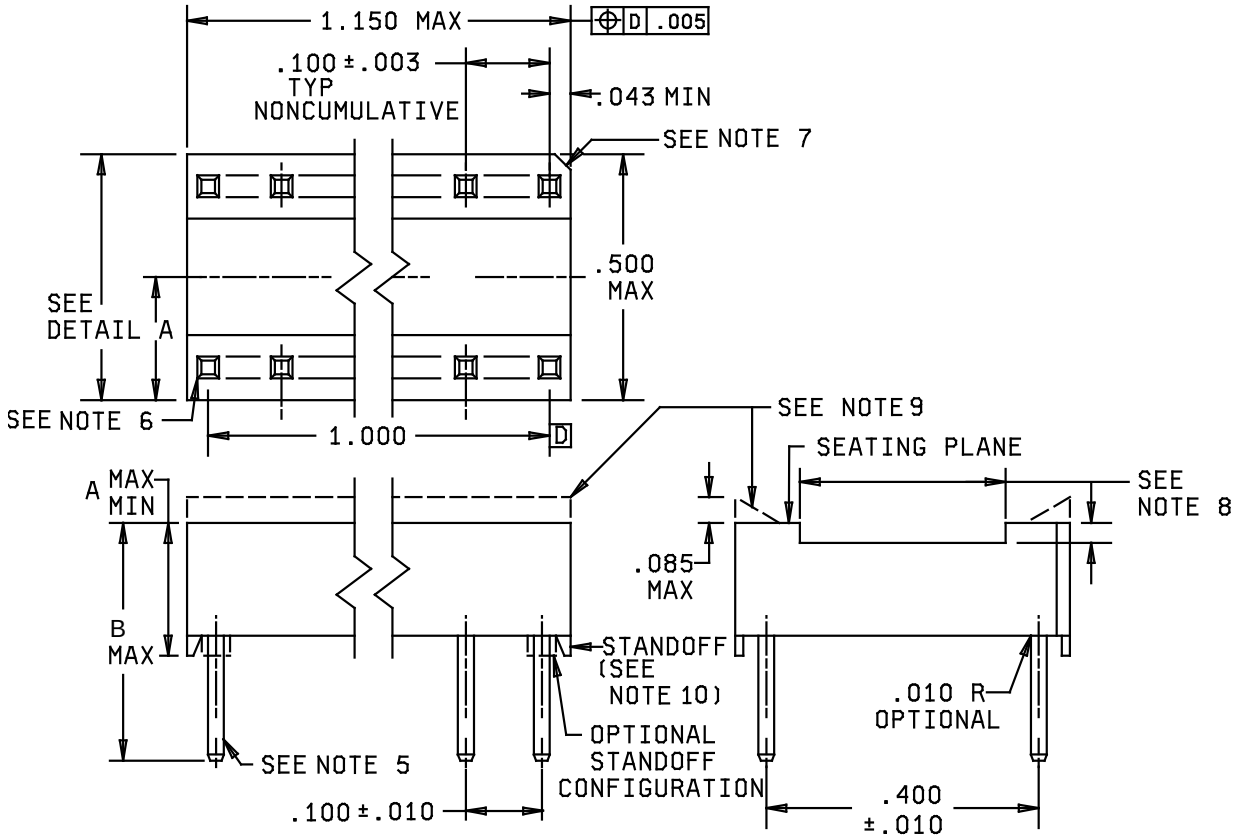

CONFIGURATION 1 (SOLID BODY WITHOUT MOUNTING HOLES)

FIGURE 1. Dimensions and configurations.

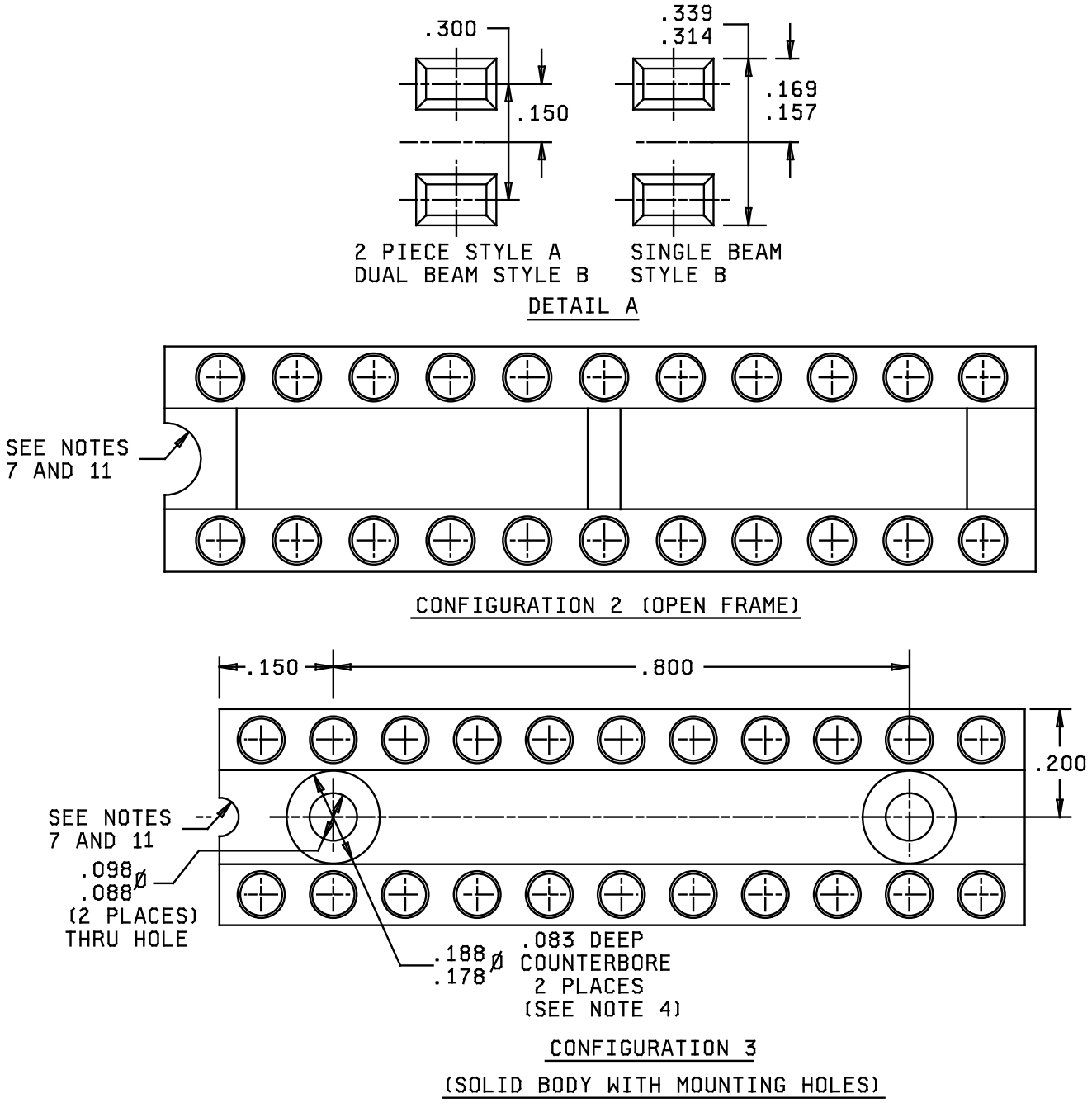

FIGURE 1. Dimensions and configurations - Continued.

Inches	mm	Inches	mm
.003	0.08	.178	4.52
.005	0.13	.188	4.78
.010	0.25	.200	5.08
.020	0.51	.207	5.26
.043	1.09	.220	5.59
.083	2.11	.400	10.16
.085	2.16	.414	10.51
.088	2.24	.439	11.15
.098	2.49	.500	12.70
.100	2.54	.800	20.32
.135	3.43	.980	24.89
.150	3.81	1.000	25.40
.175	4.45	1.150	29.21

Dash number	Dimension "A" max/min (mm)	Dimension "B" max (mm)
-010, 011, 012	.210/.190 (5.33/4.83)	.715 (18.20)
-028, 029, 030, 031, 032, 033	.175/.155 (4.44/3.94)	.300 (7.62)

NOTES:
1. Dimensions are in inches.
2. Metric equivalents are given for information only.
3. Unless otherwise specified tolerances are ±.005 inch (0.13 mm) for three place decimals and ±.01 inch (0.3 mm) for two place decimals.
4. A recess to be provided to fully enclose the head or nut of the fastener below the surface of the socket.
5. Contact termination's may be round, squared, or rectangular.
6. Devices shall accept flat leads .008 inch (0.20 mm) to .015 (0.38 mm) inch thick by .015 inch (0.38 mm) to .021 inch (0.53 mm) wide. The values for mating forces are based upon the use of standard leads .011 ±.002 (inch 0.28 ±0.05 mm) thick by .018 ±.002 inch (0.46 ±0.05 mm) wide. The length of the lead accepted by the device shall be .150 inch (3.81 mm). Contact shall be made at or before reaching a depth of .100 inch (2.54 mm).
7. A visual polarization index shall be provided in the first quadrant. If the visual index overlaps into the fourth quadrant, it shall be adjacent to or clockwise from contact number one.
8. It is desirable that the socket face shall be relieved to facilitate removal of the integrated circuit.
9. Ramped edges optional. Configuration of edges optional.
10. Standoffs optional for termination type I leads.
11. All dimensions of configuration 1 are applicable to configurations 2 and 3.
12. For termination type II, there shall be a minimum of 2 standoffs. The configuration and location of the standoffs is optional.

FIGURE 1. Dimensions and configurations - Continued.

REQUIREMENTS:

Design and construction:

Dimensions and configurations: See figure 1 and table I.

Material and contact finish: In accordance with MIL-DTL-83734.

Terminations (see table I and MIL-DTL-83734).

a. Type I: Solderless wrap.
b. Type II: Printed circuit terminal.

Contact identification: See figure 1 and note 7.

Part or Identifying Number (PIN): The PIN shall consist of this specification sheet and the dash number from table I.

Example:

M83734/6 010

Basic document number

Dash number (dash number from table I)

TABLE I. Dash numbers and characteristics. 1/

Dash number M83734/6	Termination type	Contact style	Insulator Configuration	Contact engagement area finish	Termination finish
-010	I	A	3	Gold	Gold
-011	I	A	3	Gold	Tin/lead
-012	I	A	3	Tin/lead	Tin/lead
-029	II	A	2	Gold	Tin/lead
-030	II	A	2	Tin/lead	Tin/lead
-031	II	A	3	Gold	Gold
-032	II	A	3	Gold	Tin/lead
-033	II	A	3	Tin/lead	Tin/lead

1/ For replacement purposes, the Government will stock, store, and issue -010, and -031 parts only. (See MIL-DTL-83734.)

Supersession information: See table II.

TABLE II. Supersession information.

Superseded PIN M83734/6- 1/ 2/ 3/	New PIN M83734/6-
001	010
002	011
003	012
004	028
005	029
006	030
013	028
014	029
015	030
007, 016	No superseding PIN
008, 017	No superseding PIN
009, 018	No superseding PIN

1/ Dash numbers 001 through 009 are high profile sockets.
2/ Dash numbers 007 through 009 and 016 through 018 are solder cup terminations.
3/ Dash numbers 013 through 015 are configuration 2 (open frame).

Replacement information: See table III.

TABLE III. Replacement information.

Replaced PIN M83734/6-	Replacement PIN M83734/6- 1/
013	028
014	029
015	030
019	028 open body frame 2/
020	029 open body frame 2/
021	030 open body frame 2/
022	031
023	032
024	033
025	028 open body frame 2/
026	029 open body frame 2/
027	030 open body frame 2/

1/ Replacement PINs are 2-piece contacts, style A.
2/ Dash numbers -019, -020, -021, -025, -026, -027 are solid body with type II leads.

Amendment notations. The margins of this specification are marked with vertical lines to indicate modifications generated by this amendment. This was done as a convenience only and the Government assumes no liability whatsoever for any inaccuracies in these notations. Bidders and contractors are cautioned to evaluate the requirements of this document based on the entire content irrespective of the marginal notations.

Referenced documents. This document references MIL-DTL-83734.

CONCLUDING MATERIAL

Custodians:
Army - CR
Navy - EC
Air Force - 85
DLA - CC

Review activities:
Navy - AS, MC, OS, SH
Air Force - 19, 99

Preparing activity:
DLA - CC

(Project 5935-2012-144)

NOTE: The activities listed above were interested in this document as of the date of this document. Since organizations and responsibilities can change, you should verify the currency of the information above using the ASSIST Online database at https://assist.dla.mil/.