INCH-POUND

MIL-DTL-83723/87E
1 October 2009
SUPERSEDING
MIL-C-83723/87D
30 June 1992

DETAIL SPECIFICATION SHEET

CONNECTORS, ELECTRICAL, (CIRCULAR, ENVIRONMENT RESISTING), PLUG, (THREADED COUPLING, CRIMP PIN CONTACT), (SERIES III, CLASSES A, G, K, M, R, T, W AND Z)

This specification is approved for use by all Departments and Agencies of the Department of Defense.

The requirements for acquiring the product described herein shall consist of this specification sheet and MIL-DTL-83723.

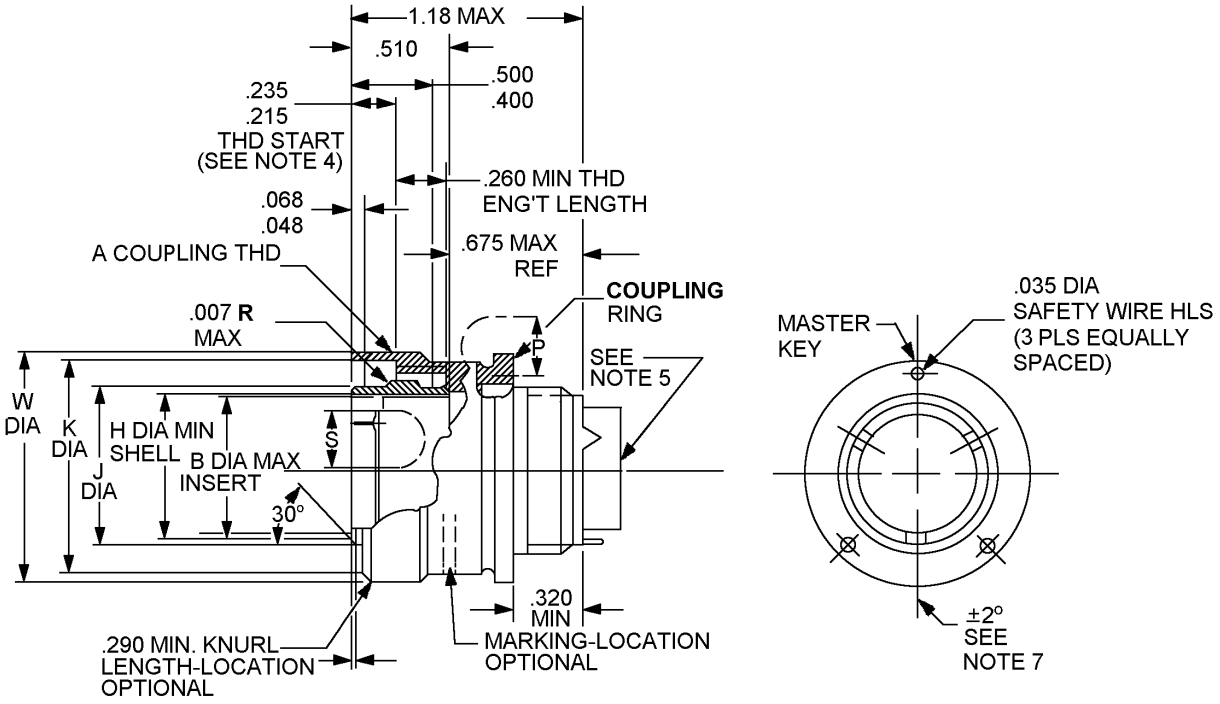

FIGURE 1. Dimensions and configurations.

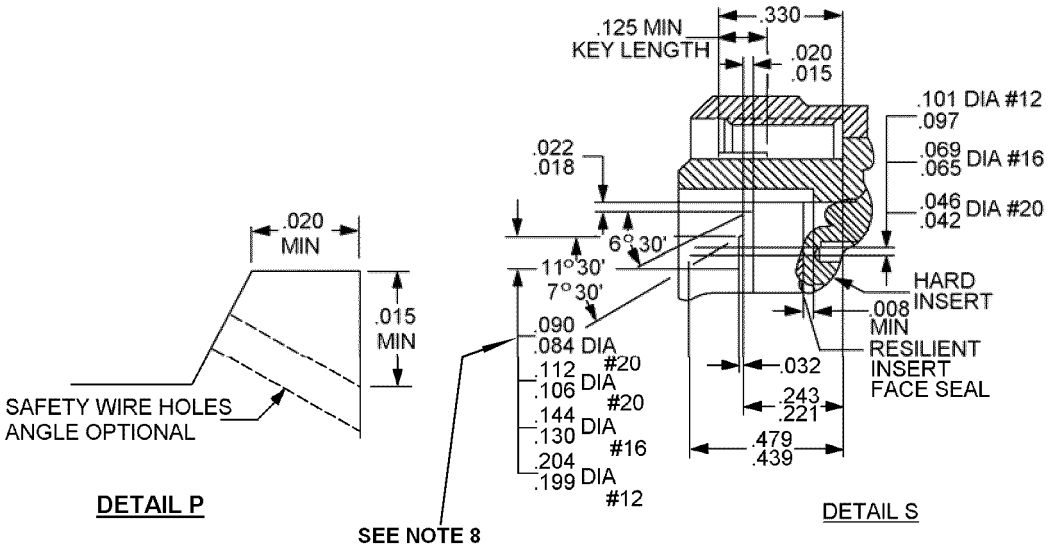

FIGURE 1. Dimensions and configurations - Continued.

Shell size	A Thread UNEF-2B	B	C	H	J	K	W
8	.5625-24	.290 (7.37)	.025 (.64)	.294 (7.47)	.405 (10.29) .396 (10.06)	.575 (14.61)	.776 (19.71)
10	.6875-24	.388 (9.86)	.031 (.79)	.428 (10.87)	.526 (13.36) .517 (13.13)	.707 (17.96)	.908 (23.06)
12	.875-20	.558 (14.17)		.598 (15.19)	.696 (17.68) .687 (17.45)	.895 (22.73)	1.080 (27.43)
14	.9375-20	.627 (15.93)		.667 (16.94)	.765 (19.43) .756 (19.20)	.957 (24.31)	1.143 (29.03)
16	1.0625-18	.772 (19.61)		.794 (20.17)	.892 (22.66) .883 (22.43)	1.084 (27.53)	1.268 (32.21)
18	1.1875-18	.860 (21.84)		.900 (22.86)	.998 (25.35) .989 (25.12)	1.209 (30.71)	1.377 (34.98)
20	1.3125-18	.985 (25.02)		1.025 (26.04)	1.123 (28.52) 1.114 (28.30)	1.334 (33.88)	1.512 (38.40)
22	1.4375-18	1.110 (28.19)		1.150 (29.21)	1.248 (31.70) 1.239 (31.47)	1.459 (37.06)	1.627 (41.33)
24	1.5625-18	1.235 (31.37)		1.275 (32.39)	1.373 (34.87) 1.364 (34.65)	1.584 (40.23)	1.762 (44.75)

FIGURE 1. Dimensions and configurations - Continued.

Inches	mm	Inches	mm	Inches	mm	Inches	mm
.005	0.13	.215	5.46	.687	17.45	1.114	28.29
.007	0.18	.221	5.46	.6875	17.46	1.123	28.52
.008	0.20	.235	5.97	.696	17.68	1.150	29.21
.015	0.38	.243	6.17	.707	17.96	1.180	29.97
.018	0.46	.260	6.60	.756	19.20	1.1875	30.16
.020	.51	.290	7.37	.765	19.43	1.209	30.71
.022	.56	.294	7.47	.772	19.61	1.235	31.37
.031	.79	.330	8.38	.794	20.17	1.236	31.39
.032	.81	.388	9.86	.832	21.13	1.239	31.47
.042	1.07	.396	10.05	.860	21.84	1.248	31.70
.046	1.17	.400	10.16	.875	22.23	1.275	32.39
.048	1.22	.405	10.29	.883	22.43	1.334	33.88
.065	1.65	.428	10.87	.892	22.66	1.360	34.54
.068	1.73	.433	11.00	.895	22.73	1.364	34.65
.069	1.75	.479	12.17	.900	22.86	1.373	34.87
.084	2.13	.500	12.70	.9375	23.81	1.4375	36.51
.090	2.29	.510	12.95	.957	24.31	1.459	37.06
.097	2.46	.517	13.13	.959	24.36	1.5625	39.69
.101	2.57	.526	13.36	.985	25.02	1.584	40.23
.106	2.69	.558	14.71	.989	25.12	1.586	40.28
.112	2.84	.5625	14.29	.998	25.35	1.703	43.26
.125	3.18	.575	14.60	1.025	26.03	1.846	46.89
.138	3.51	.598	15.19	1.0625	26.99		
.144	3.66	.627	15.93	1.084	27.53		
.198	5.03	.667	16.94	1.097	27.86		
.204	5.18	.675	17.15	1.110	28.19		

NOTES:

1. Dimensions are in inches.
2. Metric equivalents are given for information only.
3. Unless otherwise specified, tolerances are ± .005 (0.13 mm) for three place decimals and ± .01 (0.25 mm) for two place decimals and ± 1° for all angles.
4. The dimensions showing the relationship between the coupling ring and shell apply only when the coupling ring is in the fully forward position.
5. Rear accessory interchangeability dimensions shall be in accordance with MIL-DTL-83723.
6. Shell size 8 will not mate with MIL-DTL-26500 connectors.
7. The centerline of indicated projection must be located on vertical centerline ± 2°.
8. See table I for contact cavities requiring this dimension.

FIGURE 1. Dimensions and configurations - Continued.

REQUIREMENTS:

Dimensions and configurations: See figure 1.

This connector mates with MIL-DTL-83723/82 and MIL-DTL-83723/84.

Insert arrangements and polarizing positions: See MIL-STD-1554 and table I.

TABLE I. Insert arrangements requiring reduced diameters for raised seal barriers on contact cavities as indicated.

Shell size	Insert arrangements	Contact cavities
8	03	1, 2, 3
10	06	1, 2, 3, 4, 5, 6

Connector accessories: See SAE-AS85049.

Part or Identifying Number (PIN) example:

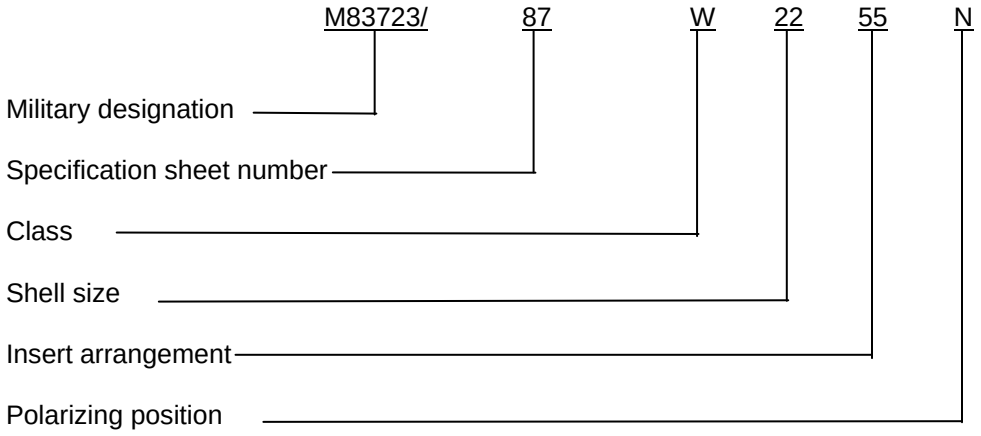

Changes from previous issue. Marginal notations are not used in this revision to identify changes with respect to the previous issue, due to the extent of the changes.

Referenced documents. In addition to MIL-DTL-83723, this document references the following:

MIL-STD-1554
MIL-DTL-26500
MIL-DTL-83723/82
MIL-DTL-83723/84
SAE-AS85049

CONCLUDING MATERIAL

Custodians:
Army - CR
Navy - AS
Air Force - 85
DLA - CC

Review activities:
Army - AR, MI
Navy - EC
Air Force - 19, 99

Preparing activity:
DLA - CC

(Project 5935-2008-167)

NOTE: The activities listed above were interested in this document as of the date of this document. Since organizations and responsibilities can change, you should verify the currency of the information above using the ASSIST Online database at http://assist.daps.dla.mil.