INCH-POUND

MIL-DTL-83723/22B
w/AMENDMENT 2
16 May 2011
SUPERSEDING
MIL-C-83723/22B(USAF)
AMENDMENT 1
14 September 1993

DETAIL SPECIFICATION SHEET

CONNECTORS, ELECTRICAL, (CIRCULAR, ENVIRONMENT RESISTING), RECEPTACLE, (BOX MOUNT, THREADED COUPLING, CRIMP PIN CONTACTS), (SERIES II, CLASSES A, G, AND R)

Inactive for new design after 13 July 1976. For new design, use SAE-AS34521 and SAE-AS50151.

This specification is approved for use by all Departments and Agencies of the Department of Defense.

The requirements for acquiring the product described herein shall consist of this specification sheet and MIL-DTL-83723.

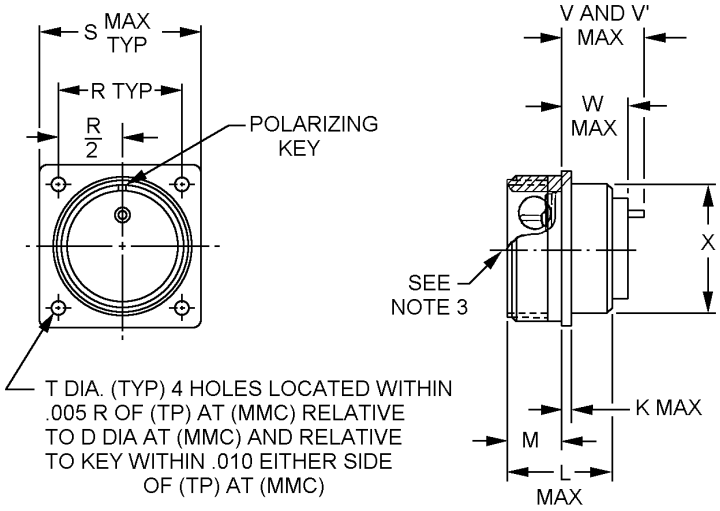

Inch	mm
.005	0.13

FIGURE 1. Dimensions and configurations.

Shell size	SAE-AS50151 size shell	K max	L max	M	R BSC	S max	X max	T	V (for contact size 0, see note 4)	V1 contact sizes 8 and 4	W max (see note 4)
08	8S	.100 (2.54)	.943 (23.952)	.578 (14.681) .562 (14.274)	.594 (15.087)	.906 (23.012)	.449 (11.404)	.130 (3.302) .115 (2.921)			.557 (14.147)
10	10S	.100 (2.54)	.943 (23.952)	.578 (14.681) .562 (14.274)	.719 (18.262)	1.031 (26.187)	.509 (12.928)	.130 (3.302) .115 (2.921)			.557 (14.147)
11	10SL	.115 (2.921)	1.065 (27.051)	.548 (13.919) .562 (14.274)	.719 (18.262)	1.031 (26.187)	.625 (15.875)	.130 (3.302) .115 2.921)			.521 (13.233)
13	12S	.100 (2.54)	.960 (24.384)	.578 (14.681) .562 (14.274)	.812 (20.624)	1.125 (28.575)	.625 (15.875)	.130 (3.302) .115 (2.921)			.557 (14.147)
12	12	.100 (2.54)	1.150 (29.21)	.766 (19.456) .750 (19.05)	.812 (20.624)	1.125 (28.575)	.625 (15.875)	.130 (3.302) .115 (2.921)			.625 (15.875)
15	14S	.100 (2.54)	.960 (24.384)	.578 (14.681) .562 (14.274)	.906 (23.012)	1.218 (30.937)	.750 (19.05)	.130 (3.302) .115 (2.921)			.557 (14.147)
14	14	.100 (2.54)	1.150 (29.21)	.766 (19.456) .750 (19.05)	.906 (23.012)	1.218 (30.937)	.750 (19.05)	.130 (3.302) .115 (2.921)			.625 (15.875)
17	16S	.100 (2.54)	.960 (24.384)	.578 (14.681) .562 (14.274)	.969 (24.612)	1.312 (33.324)	.875 (22.225)	.130 (3.302) .115 (2.921)			.557 (14.147)
16	16	.100 (2.54)	1.150 (29.21)	.766 (19.456) .750 (19.05)	.969 (24.612)	1.312 (33.324)	.875 (22.225)	.130 (3.302) .115 (2.921)		.790 (20.066	.625 (15.875)
18	18	.140 (3.556)	1.130 (28.702)	.766 (19.456) .750 (19.05)	1.062 (26.974)	1.406 (35.712)	.984 (24.993)	.130 (3.302) .115 2.921)	.915 (23.241)	.790 (20.066	.640 (16.256)
20	20	.140 (3.556)	1.161 (29.481)	.766 (19.456) .750 (19.05)	1.156 (29.362)	1.531 (38.887)	1.171 (29.743)	.130 (3.302) .115 (2.921)	.915 (23.241)	.790 (20.066	.640 (16.256)

FIGURE 1. Dimensions and configurations – Continued.

Shell size	SAE-AS50151 size shell	K max	L max	M	R BSC	S max	X max	T	V (for contact size 0, see note 4)	V1 contact sizes 8 and 4	W max (see note 4)
22	22	.140 (3.556)	1.161 (29.481)	.766 (19.456) .750 (19.05)	1.250 (31.75)	1.656 (42.062)	1.265 (32.131)	.130 (3.302) .115 (2.921)	.915 (23.241)	.790 (20.066	.640 (16.256)
24	24	.140 (3.556)	1.317 (33.451)	.828 (21.031) .812 (20.624)	1.375 (34.925)	1.781 (45.237)	1.390 (35.306)	.157 (3.987) .142 (3.606)	.853 (21.666)	.728 (18.491)	.578 (14.681)
28	28	.140 (3.556)	1.317 (33.451)	.828 (21.013) .812 (20.624)	1.562 (39.674)	2.031 (51.587)	1.640 (41.656)	.157 (3.987) .142 (3.606	.853 (21.666)	.728 (18.491)	.578 (14.681)
32	32	.170 (4.318)	1.317 (33.451)	.891 (22.631 .875 (22.225)	1.750 (44.45)	2.281 (57.937)	1.890 (48.006)	.183 (4.649) .168 (4.267)	.790 (20.066)	.655 (16.637)	.515 (13.081)
36	36	.170 (4.318)	1.317 (33.451)	.891 (22.631) .875 (22.225)	1.938 (49.225)	2.531 (64.287)	2.140 (54.356)	.183 (4.648) .168 (4.267	.790 (20.066)	.655 (16.637)	.515 (13.081)
40	40	.170 (4.318)	1.348 (34.239)	.891 (22.631 .875 (22.225)	2.188 (55.575)	2.781 (70.637)	2.359 (59.918)	.183 (4.648) .168 (4.267)	.790 (20.066)	.655 (16.637)	.515 (13.081)

NOTES:

1. All dimensions are in inches. Metric equivalents are given for information only.
2. All dimensions are after plating.
3. For details of connector front end configuration, see procurement specification.
4. When insulator arrangement sizes 18 thru 40 contain one or more size No. 0 contacts, V and W dimension will increase .150 max.

FIGURE 1. Dimensions and configurations – Continued.

REQUIREMENTS:

Dimensions and configuration: See figure 1.

This receptacle mates with MIL-DTL-83723/23.

For insert arrangements, see MIL-STD-1651.

Insert positions and alternate rotations: The letter N indicates normal (or standard) insert position. Alternate positions are identified in MIL-STD-1651.

Part or Identifying Number (PIN) example:

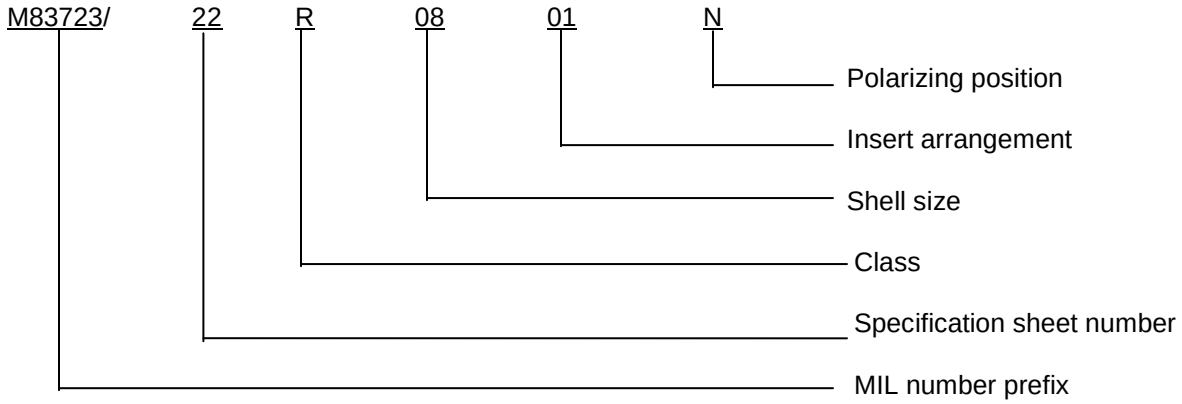

Amendment notations. The margins of this specification are marked with vertical lines to indicate modifications generated by this amendment. This was done as a convenience only and the Government assumes no liability whatsoever for any inaccuracies in these notations. Bidders and contractors are cautioned to evaluate the requirements of this document based on the entire content irrespective of the marginal notation.

Referenced documents. In addition to MIL-DTL-83723, this document references the following:

MIL-DTL-83723/23
MIL-STD-1651
SAE-AS34521
SAE-AS50151

CONCLUDING MATERIAL

Custodians:
Army – CR
Navy – AS
Air force – 85
DLA - CC

Preparing activity:
DLA - CC

Review activities:
Air Force – 19, 99

(Project 5935-2010-093)

NOTE: The activities listed above were interested in this document as of the date of this document. Since organizations and responsibilities can change, you should verify the currency of the information above using the ASSIST Online database at https://assist.daps.dla.mil.