INCH-POUND

MIL-DTL-83723/19C
w/AMENDMENT 2
16 May 2011
SUPERSEDING
MIL-C-83723/19C(USAF)
AMENDMENT 1
14 September 1993

DETAIL SPECIFICATION SHEET

CONNECTORS, ELECTRICAL, (CIRCULAR, ENVIRONMENT RESISTING), RECEPTACLE, (WALL MOUNT, THREADED COUPLING, CRIMP SOCKET CONTACTS), (SERIES II, CLASSES A, G, K, AND R)

Inactive for new design after 13 July 1976. For new design, use SAE-AS34501 and SAE-AS50151.

This specification is approved for use by all Departments and Agencies of the Department of Defense.

The requirements for acquiring the product described herein shall consist of this specification sheet and MIL-DTL-83723.

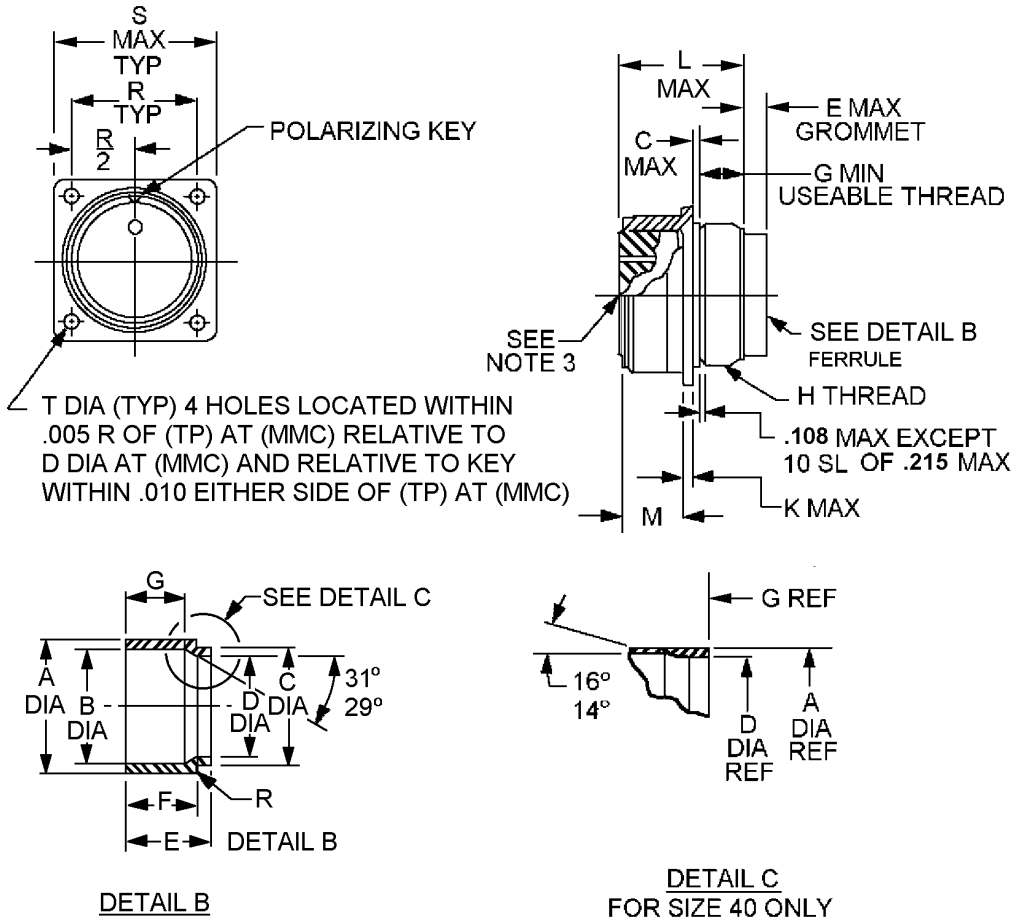

Inches	mm
.108	2.74
.215	5.46

FIGURE 1. Dimensions and configurations.

AMSC N/A

FSC 5935

Shell size	SAE-AS50151 shell size	C	E max (see note 3)	G max	H Thread class 2A	K max	L max	M	R BSC	S max	T
08	8S	.056 (1.422)	.400 (10.16)	.375 (9.525)	.4375-28UNEF	.110 (2.794)	1.135 (28.829)	.577 (14.655) .562 (14.274)	.594 (15.087)	.906 (23.012)	.130 (3.302) .115 (2.921)
10	10S	.056 (1.422)	.400 (10.16)	.375 (9.525)	.500-28UNEF	.110 (2.794)	1.135 (28.829)	.577 (14.655 .562 (14.274)	.719 (18.262)	1.031 (26.187)	.130 (3.302) .115 (2.921)
11	10SL	.056 (1.422)	.400 (10.16)	.375 (9.525	.5625-24UNEF	.110 (2.794)	1.135 (28.829)	.577 (14.655) .562 (14.274)	.719 (18.262)	1.031 (26.187)	.130 (3.302) .115 (2.921)
13	12S	.041 (1.041)	.400 (10.16)	.375 (9.525)	.625-24UNEF	.130 (3.302)	1.135 (28.829)	.577 (14.655) .562 (14.274)	.812 (20.624)	1.125 (28.575)	.130 (3.302) .115 (2.921)
12	12	.072 (1.828)	.317 (8.051)	.375 (9.525)	.625-24UNEF	.130 (3.302)	1.495 (37.973)	.765 19.431) .750 (19.05)	.812 (20.624)	1.125 (28.575)	.130 (3.302) .115 (2.921)
15	14S	.041 (1.041)	.400 (10.16)	.375 (9.525)	.750-20UNEF	.130 (3.302)	1.135 (28.829)	.577 (14.655) .562 (14.274)	.906 (23.012)	1.219 (30.962)	.130 (3.302) .115 (2.921)
14	14	.072 (1.828)	.317 (8.051)	.375 (9.525)	.750-20UNEF	.130 (3.302)	1.495 (37.973)	.765 (19.431) .750 (19.05)	.906 (23.012)	1.219 (30.962)	.130 (3.302) .115 (2.921)
17	16S	.041 (1.041)	.400 (10.16)	.375 (9.525)	.875-20UNEF	.130 (3.302)	1.135 (28.829)	.577 (14.655) .562 (14.274)	.969 (24.612)	1.312 (33.324)	.130 (3.302) .115 (2.921)
20	20	.056 (1.422)	.380 (9.652)	.500 (12.7)	1.125-18UNEF	.160 (4.064)	1.495 (37.973)	.765 (19.431) .750 (19.05	1.156 (29.362)	1.531 (38.887)	.130 (3.302) .115 (2.921)

FIGURE 1. Dimensions and configuration – Continued.

Shell size	SAE-AS50151 shell size	C	E max (see note 3)	G max	H Thread class 2A	K max	L max	M	R BSC	S max	T
22	22	.056 (1.422)	.380 (9.652)	.500 (12.7)	1.250-18UNEF	.160 (4.064)	1.495 (37.973)	.765 (19.431) .750 (19.05)	1.250 (31.75)	1.656 (42.062)	.130 (3.302) .115 (2.921
24	24	.041 (1.041)	.315 (8.001)	.500 (12.7)	1.375-18UNEF	.160 (4.064)	1.556 (37.973)	.827 (21.005) .812 (20.624)	1.375 (34.925)	1.781 (45.237)	.157 (3.987) .142 (3.606)
28	28	.041 (1.041)	.315 (8.001)	.500 (12.7)	1.625-18UNEF	.160 (4.064)	1.556 (37.973)	.827 (21.005) .812 (20.624)	1.562 (39.674)	2.031 (51.587)	.157 (3.987) .142 (3.606)
32	32		.260 (6.604)	.531 (12.7)	1.875-16UN	.160 (4.064)	1.620 (41.148)	.890 (22.606) .875 (22.225)	1.750 (44.45)	2.281 (57.937)	.183 (4.648) .168
36	36		.260 (6.604)	.531 (12.7)	2.125-16UN	.160 (4.064)	1.620 (41.148)	.890 (22.606) .875 (22.225)	1.938 (49.225)	2.531 (64.287	.183 (4.648) .168
40	40		.260 (6.604)	.531 (12.7)	2.375-16UN	.160 (4.064)	1.620 (41.148)	.890 (22.606) .875 (22.225)	2.188 (55.575)	2.781 (70.637)	.183 (4.648) .168 (4.267)

FIGURE 1. Dimensions and configurations – Continued.

Detail B dimensions								
Shell size	A	B	C	D	E	F	G	R
8S	.280 (7.112) .270 (6.858)	.250 (6.35) .237 (6.019)	.245 (6.223) .232 (5.892)	.180 (4.572) .167 (4.241)	.427 (10.845) .401 (10.185)	.342 (8.686) .326 (8.280)	.286 (7.264) .276 (7.010)	
10S	.340 (8.636) .332 (8.432)	.312 (7.924) .299 (7.594)	.298 (7.569) .285 (7.239)	.242 (6.146) .229 (5.816)	.420 (10.668) .397 (10.083)	.335 (8.509) .322 (8.178)	.272 (6.908) .262 (6.654)	
10SL	.409 (10.338) .401 (10.185)	.380 (9.652) .367 (9.321)	.378 (9.601) .365 (9.271)	.310 (7.874) .291 (7.391)	.430 (10.922) .407 (10.337)	.335 (8.509) .322 (8.178)	.237 (6.019) .227 (5.765)	
12 & 12S	.460 (11.684) .452 (11.480)	.432 (10.972) .419 (10.642)	.403 (10.236) .390 (9.906)	.355 (9.017) .342 (8.686)	.419 (10.642) .396 (10.058)	.340 (8.636) .326 (8.280)	.270 (6.885) .260 (6.604)	
14 & 14S	.563 (14.300) .550 (13.97)	.518 (13.157) .505 (12.827)	.485 (12.319) .472 (11.988)	.448 (11.379) .435 (11.049)	.414 (10.515) .391 (9.931)	.339 (8.610) .326 (8.280)	.261 (6.629) .251 (6.375)	.040 (1.106) .020 (.508)
16 & 16S	.689 (17.500) .676 (12.170)	.644 (16.357) .631 (16.027)	.605 (15.367) .592 (15.036)	.574 (14.579) .561 (14.249)	.424 (10.769) .401 (10.185)	.339 (8.610) .326 (8.280)	.266 (6.756) .256 (6.502)	.040 (1.016) .020 (.508)
18	.806 (20.472) .793 (20.142)	.760 (19.304) .747 (18.973)	.725 (18.415) .712 (18.084)	.690 (17.526) .677 (9.575)	.574 (14.579) .551 (13.995)	.449 (11.404) .436 (11.074)	.371 (9.423) .361 (9.169)	.060 (1.524) .040 (1.016)
20	.941 (23.901) .928 (23.571)	.894 (22.707) .881 (22.377)	.863 (21.920) .850 (21.59)	.814 (20.675) .801 (20.345)	.573 (14.554) .550 (13.97)	.458 (11.633) .445 (11.303)	.385 (9.779) .375 (9.525)	.060 (1.524) .040 (1.016)
22	1.059 (26.898) 1.046 (26.568)	.982 (24.942) .969 (24.612)	.973 (24.714) .960 (24.384)	.902 (22.910) .889 (22.580)	.551 (13.995) .528 (13.411)	.456 (11.582) .443 (11.252)	.389 (9.880) .379 (9.626)	.060 (1.524) .040 (1.016)
24	1.170 (29.718) 1.157 (29.387)	1.106 (28.092) 1.093 (27.762)	1.085 (27.559) 1.072 (27.228)	1.026 (26.060) 1.013 (25.730)	.547 (13.893) .524 (13.309)	.457 (11.607 .444 (11.277	.385 (9.779) .375 (9.525)	.060 (1.524) .040 (1.016)
28	1.401 (35.585) 1.388 (35.255)	1.330 (33.782) 1.317 (33.451)	1.245 (31.623) 1.232 (31.292)	1.185 (30.099) 1.172 (29.768)	.573 (14.554) .550 (13.97)	.458 (11.633 .445 (11.303	.329 (8.356) .319 (8.102)	.060 (1.524) .040 (1.016)

FIGURE 1. Dimensions and configurations – Continued.

Detail B dimensions								
Shell size	A	B	C	D	E	F	G	R
32	1.652 (41.960) 1.639 (41.630)	1.608 (40.843) 1.595 (40.513)	1.515 (38.481) 1.502 (38.150)	1.440 (36.576) 1.427 (36.245)	.544 (13.817) .521 (13.233)	.459 (11.658) .446 (11.328)	.316 (8.026) .306 (7.772)	.060 (1.524) .040 (1.016)
36	1.860 (47.244) 1.847 (46.913)	1.796 (45.618) 1.783 (45.288)	1.751 (44.475) 1.738 (44.145)	1.653 (41.986) 1.640 (41.656)	.573 (14.554) .550 (13.97)	.463 (11.760) .450 (11.43)	.355 (9.017) .345 (8.763)	.060 (1.524) .040 (1.016)
40	2.105 (53.467) 2.092 (53.136)	2.000 (50.8) 1.989 (50.520)		1.905 (48.387) 1.892 (48.056)	.823 (20.604) .800 (20.32)		.379 (9.626) .279 (7.086)	

NOTES:

1. Dimensions are in inches.
2. Metric equivalents are in parentheses.
3. When insulator arrangement sizes 18 thru 40 contain one or more size No. 0 contacts, E dimension will increase .150 max.
4. For details of connector front end configuration see procurement specification.

FIGURE 1. Dimensions and configurations – Continued.

REQUIREMENTS:

Dimensions and configuration: See figure 1.

This receptacle mates with MIL-DTL-83723/24.

For insert arrangements see MIL-STD-1651.

Rear hardware as specified in MIL-DTL-83723/27, /35, or /50 must be used for correct wire sealing.

Insert positions and alternate rotations: The letter N indicates normal (or standard) insert position. Alternate positions are identified in MIL-STD-1651.

Part or Identifying Number (PIN) example:

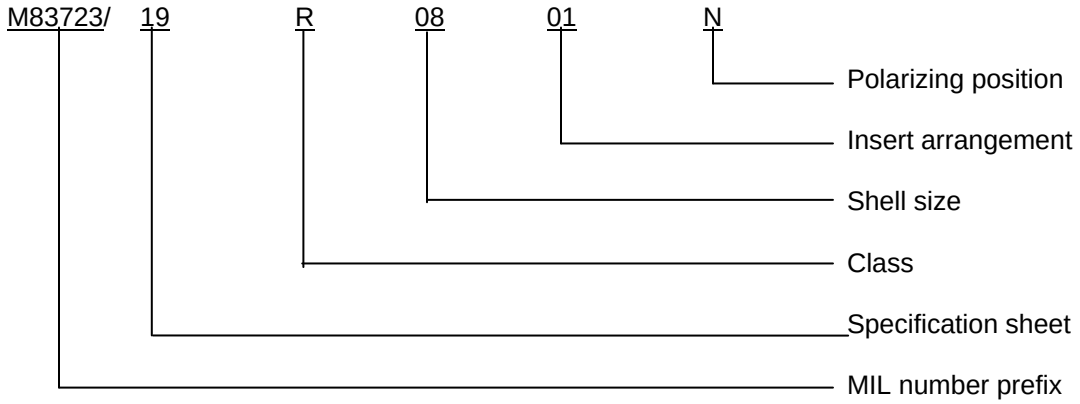

Amendment notations. The margins of this specification are marked with vertical lines to indicate modifications generated by this amendment. This was done as a convenience only and the Government assumes no liability whatsoever for any inaccuracies in these notations. Bidders and contractors are cautioned to evaluate the requirements of this document based on the entire content irrespective of the marginal notation.

Referenced documents. In addition to MIL-DTL-83723 this document references the following:

MIL-DTL-83723/24
MIL-DTL-83723/27
MIL-DTL-83723/35
MIL-DTL-83723/50
MIL-STD-1651
SAE-AS34501
SAE-AS50151

CONCLUDING MATERIAL

Custodians:
Air Force – 85
DLA – CC

Preparing activity:
DLA - CC

Review activities:
Air Force – 19, 99

(Project 5935-2010-090)

NOTE: The activities listed above were interested in this document as of the date of this document. Since organizations and responsibilities can change, you should verify the currency of the information above using the ASSIST Online database at https://assist.daps.dla.mil.