METRIC

MIL-DTL-83538D
30 October 2006
SUPERSEDING
MIL-DTL-83538C
13 May 2005

DETAIL SPECIFICATION

CONNECTORS AND ACCESSORIES, ELECTRICAL, CIRCULAR, UMBILICAL, ENVIRONMENT RESISTANT, REMOVABLE CRIMP CONTACTS FOR MIL-STD-1760 APPLICATIONS (METRIC), GENERAL SPECIFICATION FOR

This specification is approved for use by all Departments and Agencies of the Department of Defense.

1. SCOPE

1.1 Scope. This specification covers connectors and accessories, electrical, circular, umbilical. The connector assembly provides the necessary connections required to meet MIL-STD-1760, class I electrical interface between stores and their associated launchers using a "blind mating" mechanism. The connector assembly consists of a receptacle installed on the launcher, a receptacle installed on the store, and a buffer plug installed between the two receptacles. This specification also includes the required mounting adapters and nut, accessory adapter, cable bushing, and protective covers (see 6.1 for details on intended use and application). The connectors covered by this specification are intended for use with launcher mechanisms with an applied holding force in the range 271 Newtons (61 lbs) to 427 Newton (96 lbs).

1.1.1 Part or Identifying Number (PIN) construction. The following is an example of the PIN (see 3.40.1 and 3.46):

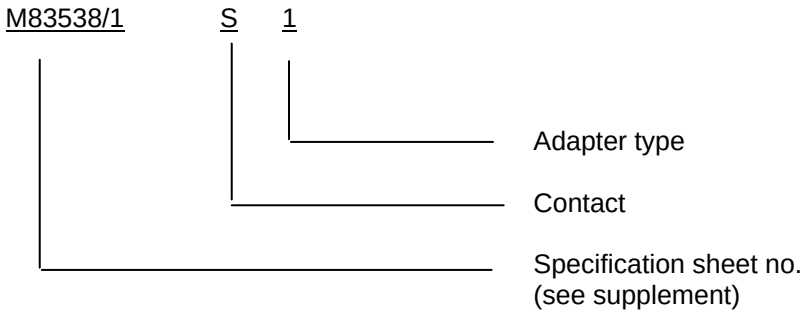

Comments, suggestions, or questions on this document should be addressed to Defense Supply Center Columbus, ATTN: VAI, P.O. Box 3990, Columbus OH 43218-3990 or emailed to circularconnector@dscc.dla.mil. Since contact information can change, you may want to verify the currency of this address information using the ASSIST Online database at http://assist.daps.dla.mil.

1.2 Physical characteristics. The connector assembly (see figure 1) consists of a launcher receptacle, MIL-DTL-83538/4, buffer plugs, MIL-DTL-83538/3 and MIL-DTL-83538/11, and a store receptacle, MIL-DTL-83538/1. In addition, there are connector caps to protect the launcher receptacle and the store receptacle after they have been installed on launchers and stores and are not mated with the buffer plug. The launcher receptacle cap, MIL-DTL-83538/8, meets all the environmental and retention requirements that apply to the buffer plug. The store receptacle cap, MIL-DTL-83538/7, meets the sand and dust requirement (see 3.36). The launcher receptacle accessory adapter, MIL-DTL-83538/9, mates with the same accessories in accordance with MIL-DTL-38999, series III and as specified in SAE-AS85049.

1.2.1 Contact styles:

Connectors used with standard contact arrangements as specified in MIL-STD-1560, are as follows:

P - Pin: Buffer plug only (nonremovable).
S - Socket: Receptacles only (Crimp, removable).
L - No contacts are provided with the receptacle.

The "P" or "S" designators are used to indicate that connectors will be used with full complements of the applicable standard contacts as specified in MIL-STD-1560.

Receptacles accommodate crimp removable contacts "(S)" and may be ordered without standard contacts by using an “L” designator.

2. APPLICABLE DOCUMENTS

2.1 General. The documents listed in this section are specified in sections 3, 4, or 5 of this specification. This section does not include documents cited in other sections of this specification or recommended for addition information or as examples. While every effort has been made to ensure the completeness of this list, document users are cautioned that they must meet all specified requirements of documents cited in sections 3, 4, or 5 of this specification, whether or not they are listed.

2.2 Government documents.

2.2.1 Specifications, standards, and handbooks. The following specifications, standards, and handbooks form a part of this document to the extent specified herein. Unless otherwise specified, the issues of these documents are those cited in the solicitation or contract.

DEPARTMENT OF DEFENSE SPECIFICATIONS

MIL-DTL-22520	-	Crimping Tools, Wire Termination, General Specification for
MIL-DTL-38999	-	Connectors, Electrical, Circular, Miniature, High Density, Quick Disconnect (Bayonet, Threaded, and Breech Coupling), Environment Resistant, Removable Crimp and Hermetic Solder Contacts, General Specification for
MIL-A-46146	-	Adhesive Sealants, Silicone, RTV, NonCorrosive (For Use with Sensitive Metals and Equipment)
MIL-I-81969/8	-	Installing and Removal Tools, Connector Electrical Contact, Types I and II, Class 2, Composition A
MIL-I-81969/14	-	Installing and Removal Tools, Connector Electrical Contact, Type III, Class 2, Composition B

MIL-DTL-83538/1	-	Connectors and Accessories, Electrical, Circular, Umbilical, Receptacle, Store Assembly, Removable crimp contacts, Sockets, For MIL-STD-1760 Applications (Metric)
MIL-DTL-83538/3	-	Connectors and Accessories, Electrical, Circular, Umbilical, Adapter, Buffer Plug, Non-removable Pin Contacts, For MIL-STD-1760 Applications (Metric)
MIL-DTL-83538/4	-	Connectors and Accessories, Electrical, Circular, Umbilical, Receptacle, Launcher Assembly, Removable crimp contacts, Sockets, For MIL-STD-1760 Applications (Metric)
MIL-DTL-83538/6	-	Connectors and Accessories, Electrical, Circular, Umbilical, Nut, Hexagon, Store Receptacle Connector Mounting, For MIL-STD-1760 Applications (Metric)
MIL-DTL-83538/7	-	Connectors and Accessories, Electrical, Circular, Umbilical, Cover, Protective, Store Receptacle for MIL-STD-1760 Applications (Metric)
MIL-DTL-83538/8	-	Connectors and Accessories, Electrical, Circular, Umbilical, Cover, Protective, Launcher Receptacle, for MIL-STD-1760 Applications (Metric)
MIL-DTL-83538/9	-	Connectors and Accessories, Electrical, Circular, Umbilical, Adapter, Accessory, Launcher Receptacle, For MIL-STD-1760 Applications (Metric)
MIL-DTL-83538/11	-	Connectors and Accessories, Electrical, Circular, Umbilical, Adapter, Buffer Plug, Non-Removable PIN Contacts, For MIL-STD-1760 Applications (Metric)
MIL-DTL-83538/12	-	Connectors and Accessories, Electrical, Circular, Umbilical, Protective Cap, Installation and Removal Tool, For MIL-STD-1760 Applications (Metric)

DEPARTMENT OF DEFENSE STANDARDS

MIL-STD-790	-	Established Reliability and High Reliability Qualified Products List (QPL) Systems for Electrical, Electronic, and Fiber Optic Parts Specifications
MIL-STD-810	-	Environmental Engineering Considerations and Laboratory TestS
MIL-STD-889	-	Dissimilar Metals
MIL-STD-1285	-	Marking of Electrical and Electronic Parts
MIL-STD-1472	-	Human Engineering
MIL-STD-1560	-	Insert Arrangements for MIL-DTL-38999, MIL-C-29600 Series A, and MIL-C-27599 Electrical, Circular Connectors
MS27488	-	Plug, End Seal, Electrical Connector
MS51835	-	Insert and Stud, Locked In - Key Locked, Hole Dimensions For And Assembly Of

(See supplement 1 for list of specifications sheets.)

(Copies of these documents are available online at http://assist.daps.mil/quicksearch/ or http://assist.daps.dla.mil or from the Standardization Document Order Desk, 700 Robbins Avenue, Building 4D, Philadelphia, PA 19111-5094.)

2.3 Non-Government publications. The following documents form a part of this document to the extent specified herein. Unless otherwise specified, the issues of these documents are those cited in the solicitation or contract.

ASTM INTERNATIONAL

ASTM B488	-	Standard Specification for Electrodeposited Coatings of Gold for Engineering Uses.

(Copies of these documents are available at http://www.astm.org or ASTM International, 100 Barr Harbor Drive, PO Box C700, West Conshohocken, Pennsylvania 19428-2959.)

ELECTRONIC INDUSTRIES ASSOCIATION (EIA)

EIA-RS359	-	Colors for Color Identification and Coding EIA Standard
EIA-364	-	Electrical Connector/Socket Test Procedures Including Environment Classifications
EIA-364-03	-	Altitude Immersion Test Procedure for Electrical Connectors
EIA-364-06	-	Contact Resistance Test Procedure for Electrical Connectors
EIA-364-10	-	Fluid Immersion Test Procedure for Electrical Connectors and Sockets
EIA-364-14	-	Ozone Exposure Test Procedure for Electrical Connectors
EIA-364-20	-	Air Leakage Test Procedure for Electrical Connectors
EIA-364-21	-	Insulation Resistance Test Procedure for Electrical Connectors, Sockets, And Coaxial Contacts
EIA-364-24	-	Maintenance Aging Test Procedure for Electrical Connectors
EIA-364-26	-	Connectors, Contacts and Sockets, Electrical, Salt Spray Test Procedure For
EIA-364-27	-	Connectors, Electrical, Mechanical Shock (Specified Pulse) Test Procedure For
EIA-364-29	-	Contact Retention Test Procedure for Electrical Connectors
EIA-364-31	-	Connectors and Sockets, Electrical, Humidity Test Procedure For
EIA-364-32	-	Connectors And Sockets, Electrical, Thermal Shock (Temperature Cycling) Test Procedure For
EIA-364-35	-	Connectors, Electrical, Insert Retention Test Procedure For
EIA-364-54	-	Connectors, Contacts, and Sockets, Electrical, Magnetic Permeability Test Procedure For
EIA-364-66	-	Electrical Connectors, Emi Shielding Effectiveness Test Procedure For
EIA-364-83	-	Shell-To-Shell and Shell-To-Bulkhead Resistance Test Procedure for Electrical Connectors
EIA-364-105	-	Connectors, Electrical, Altitude - Low Temperature Test Procedure For
EIA-557	-	Statistical Process Control Systems

(Copies of these documents are available at http://global.ihs.com or Global Engineering Documents, 15 Inverness Way East, Englewood, CO 80112.)

INTERNATIONAL STANDARDS ORGANIZATIONS (ISO)

ISO/R68-1973		-	ISO-Basic Profile for Triangular Screw Threads, .25 to 5 mm
ISO/R261-1973		-	ISO-Metric Screw Threads, General Plan, .25 to 300 mm
ISO/R262-1973		-	ISO-Metric Screw Threads for Screws, Bolts, and Nuts, 6 to 39 mm
ISO/R965-1973			
	Part 1	-	ISO General Purpose Metric Screw Threads, Tolerances, Principals and Basic Data
	Part 2	-	ISO General Purpose Metric Screw Threads, Tolerances, Limits of Sizes for Medium Quality Commercial Bolt And Nut Threads 1.6 to 39 mm
	Part 3	-	ISO General Purpose Metric Screw Treads, Tolerances and Deviations for Constructional Threads, Tolerances 1.6 to 355 mm
ISO-10012-1		-	Quality Assurance Requirements for Measuring Equipment

(Copies of these documents are available at http://www.iso.ch or International Organization for Standardization American National Standards Institute, 11 West 42nd Street, 13th Floor, New York, NY 10036.)

EUROFIGHTER Gmbh STANDARDS

JN1003 (J62.017)	-	Connectors, Medium and High Density, 100% Scoop Proof, Generally to Specification LN29729 J62.930 (JN1092) Clamp, Cable, Electrical, Screened, Straight, 45° and 90° Styles.
JN1057 (J64.217)	-	Contacts, Electrical Data Bus.
JN1088 (J61.517)	-	Cable, Special, Electrical, HF.
JN1104 (J64.224)	-	Contacts, Coaxial and Triaxial, Size 12, Matched Impedance.
JN1120 (J64.226)	-	Contacts, Dummy Sizes 12, 08 and 05.
PAN6421 (75.6421)	-	Cable, Special Electric (MIL-STD-1553B Data Bus).

(Copies of these documents are available by calling +44(0)1772 852232, or by Email: glenn.Jackson@baesystems.com or write to: Head of Standards Group, W427B Standards office, Warton Aerodrome, Warton, Nr Preston, Lancashire PR4 1AX, Great Britain.)

SAE INTERNATIONAL

SAE-AMS-QQ-N-290	-	Nickel Plating (Electrodeposited)
SAE-AS3582	-	Packing, Preformed, O-Ring Seal AMS 3304
SAE-AS39029	-	Contacts, Electrical Connector, General Specification for
SAE-AS39029/56	-	Contacts, Electrical Connector, Socket, Crimp Removable, (For MIL-C-38999 Series I, III, and IV Connectors)
SAE-AS39029/75	-	Contacts, Electrical Connector, Socket, Crimp Removable, Shielded, Size 12 (For MIL-C-38999 Series I, III, and IV Connectors)
SAE-AS39029/91	-	Contact, Electrical Connector, Concentric Twinax, Socket, Shielded, Size 8
SAE-AS39029/103	-	Contacts, Electrical Connector, Socket, Crimp Removable, Coaxial, Size 12, (For MIL-C-38999 Series I, II, III and IV Connectors)

SAE-AS85049	-	Connector Accessories, Electrical, General Specification for
SAE-AS85049/19	-	Connector Accessories, Electrical, Backshell, Nonenvironmental, Straight, RFI/EMI, Category 3B (For MIL-C-38999 Series III And IV Connectors)
SAE-AS85049/80	-	Connector Accessories, Electrical, Dummy Contact, Sizes 12 and 8, Category 7 (MIL-C-38999 Connectors)
SAE-AS90376	-	Cap, Dust, Plastic, Electric Connector

(Copies of these documents are available at http://www.sae.org or SAE International, 400 Commonwealth Drive, Warrendale, PA 15096-001.)

STANAG STANDARDS

AEP-7	-	Nuclear, Biological and Chemical (NBC) Defence Factors In The Design, Testing and Acceptance of Military Equipment.

(Copies of this document are available from the North Atlantic Treaty Organization, NATO Headquarters, 1110 Brussels, Belgium.)

2.4 Order of precedence. In the event of a conflict between the text of this document and the references cited herein (except for related specification sheets) the text of this document takes precedence. Nothing in this document, however, supersedes applicable laws and regulations unless a specific exemption has been obtained.

3. REQUIREMENTS

3.1 Specification sheets. The individual item requirements shall be as specified herein and in accordance with the applicable specification sheet. In the event of any conflict between the requirements of this specification and the specification sheet, the latter shall govern.

3.2 Qualification. Connectors furnished under this specification shall be products that are authorized by the qualifying activity for listing on the applicable qualified product list before contract award (see 4.4 and 6.3).

3.2.1 Quality.

3.2.1.1 Statistical process control (SPC). The contractor shall implement and use SPC techniques in the manufacturing process for parts covered by this specification. The SPC program shall be developed and maintained in accordance with EIA-557. The SPC program shall be documented and maintained as part of the overall reliability assurance program as specified in MIL-STD-790.

3.3 Materials.

3.3.1 Recycled, recovered, or environmentally preferable materials. Recycled, recovered, or environmentally preferable materials should be used to the maximum extent possible, provided that the material meets or exceeds the operational and maintenance requirements, and promotes economically advantageous life cycle costs.

3.3.2 Environmental safety. Highly toxic or carcinogenic materials shall not be used in the fabrication or maintenance of the connector assembly.

3.3.3 Metals. Metals shall be of a corrosion-resistant type or shall be plated or treated to resist corrosion.

3.3.3.1 Dissimilar metals and compatible couples. When dissimilar metals are used in intimate contact with each other, protection against galvanic corrosion shall be provided. The use of dissimilar metals in contact, which tend toward active galvanic corrosion (particularly brass, copper, or steel used in contact with aluminum or aluminum alloy) is not acceptable. However, metal plating of dissimilar base metals to provide similar or suitable abutting surfaces is permitted.

The use of dissimilar metals separated by a suitable insulating material is also permitted. Dissimilar metals and compatible couples shall be in accordance with MIL-STD-889.

3.3.4 Components. Materials for specific components of the connector shall be as follows:

a. Shell: Corrosion-resistant steel.
b. Coupling ring: Corrosion-resistant steel.
c. Insert: Reinforced epoxy resin or other suitable rigid dielectric.
d. Spring fingers: Heat-treated beryllium copper or corrosion-resistant steel.
e. Filler compound: RTV silicone in accordance with MIL-A-46146, or equivalent.
f. Gasket, grommet, and interfacial seal: fluorosilicone.
g. Buffer dust cap: Non-metallic.

3.3.5 Fungus resistance. Materials used in the construction of these connectors shall be fungus inert (see 4.3.2).

3.3.6 Magnetic permeability. The relative permeability of the wired, assembled, and fully mated connector assembly shall be less than 2.0μ when measured in accordance with 4.6.34.

3.3.7 Biological and chemical requirements.

3.3.7.1 Minimum requirements. The minimum requirement for the connectors and accessories is to be capable of safe recovery after contamination and to provide the capability to utilize the associated store to its full capacity for a short period (i.e. 4 weeks), involving repeated contamination and without decontamination measures applied. The connectors and accessories shall therefore be inherently resistant to, or protected against, damage from the agents of attack and decontaminants which could affect its operational effectiveness. The connector and accessories shall be designed for ease of operation/use by operators in a BC environment.

3.3.7.2 Defense factors. The AEP-7, “Nuclear, Biological and Chemical (NBC) Defense factors in the Design, Testing and Acceptance of Military Equipment” document shall apply as requirement for the connectors and accessories design, with the exception of the nuclear Hardening Requirement which shall not be taken into consideration.

3.3.7.3 Hardening. Hardening is required against the following agents:

a. Mustard Agent (H)
b. Mustard Lewisite (HL)
c. Thickened Mustard Lewisite (THL)
d. Nerve Agent (GB) and also in thickened form
e. Nerve Agent (GD) and also in thickened form
f. Nerve Agent (VX) and also in thickened form

3.3.7.4 Decontaminants. Protection of the connectors and accessories shall be achieved by use of design and materials resistant to BC agents, and any decontamination will be for protection of personnel. However decontamination procedures for connector and accessories may be used as part of BC defense training, but only non-aggressive decontamination stimulants such as water shall be used.

3.3.7.5 Method of decontamination. The only decontamination method that shall be used on The connectors and accessories shall be washing with a detergent and water. However dusting of small areas or transfer from personnel of Fullers' Earth may occur.

3.3.7.6 Detergent and water. A detergent/water wash is not strictly a decontamination procedure in that the chemical agents are not destroyed, only moved to another location when the agent no longer presents an operationally significant hazard. The detergent/water mix used shall be that specified for aircraft washing.

3.3.7.7 Fullers' Earth (FE). Fullers' Earth is mainly issued as a personal decontaminant but is also reasonably effective for connectors and accessories, except in the case of thickened agents. Agent is physically absorbed and is effectively held by the powder provided that the chemical loading of the absorbent does not exceed 10%. It should be noted that contaminated powder may be harmful if ingested.

3.3.7.8 Chemical hardening operational considerations. Completely effective decontamination of connectors and accessories is not currently considered operationally practicable because the chemical agents may become inaccessible to decontaminants due to:

a. The permeability of materials to chemical agents.
b. The spread and trapping of agents in capillary spaces formed by rivets, screws, joints, inspection plates, bolt-on fixtures etc.

These points shall be taken in consideration when it is realized that chemical agents combine the solvent properties of paint stripper with the spreading characteristics of penetrating and release oils. The connectors and accessories shall therefore be operated without decontamination and as such the connector is to be hardened against damage which could affect its operational effectiveness.

3.4 Design and construction. Connectors and accessories shall be designed and constructed to withstand normal handling incident to installation and maintenance in service.

3.4.1 Human performance/human engineering. The connector assembly design shall be directed toward simplicity and error-free ease of installation and maintenance. The requirements of MIL-STD-1472 shall be met, as appropriate, with emphasis on areas including personnel safety, component marking, and component alignment and keying for blind mate operations. The design of the buffer plug shall be such that the buffer plug can be installed on the launcher receptacle using MIL-DTL-83538/12 tool as an assembly aid by personnel wearing nuclear/biological/chemical warfare protective clothing (specifically, gloves or arctic gloves).

3.4.2 Contacts. Contacts used in this connector shall be standard crimp contacts qualified in accordance with SAE-AS39029. The twinaxial socket contacts shall be in accordance with SAE-AS39029/91. The high bandwidths 1 and 2 coaxial socket contacts shall be in accordance with SAE-AS9029/103. The high bandwidths 3 and 4 coaxial socket contacts shall be in accordance with SAE-AS39029/75. The power and discrete socket contacts shall be in accordance with SAE-AS39029/56. The buffer plug shall contain a full set of nonremovable contacts. Unless otherwise specified, each receptacle shall contain a full complement of contacts with each connector unit package (see 1.2.1).

In order to meet alternative aircraft wiring requirements, alternative contacts are available. Documents JN1003, JN1104, JN1057 and JN1120 are equivalent to SAE-AS39029 contacts, but feature slightly different cable accommodation requirements to fit alternative cables. Users wishing to use alternative contacts should order receptacles without contacts (using the "L" designator), and source the contacts separately. In order to satisfy all aircraft wiring requirements, qualifications shall be conducted on connectors wired with a mixture of wires from military specifications as well as JN/PAN documents (see 4.4.1).

3.4.2.1 Contact arrangement. The contact arrangement shall be in accordance with the 25-20 insert arrangement as specified in MIL-STD-1560. The engaging ends of the pin contacts and socket contacts in assembled connectors shall be located within 0.38 mm (.015 inch) diameter of true position. Test voltages for service ratings shall be as specified in table XI.

3.4.2.2 Installing and removal tools. Both the MIL-I-81969/8 and the MIL-I-81969/14 tools shall properly assemble and disassemble the socket contacts into their connector inserts. If the connectors are to be supplied with contacts, then one MIL-I-81969/14 tool for each contact size shall also be supplied in the unit package. If the connectors are to be supplied without contacts, then no tools shall be supplied in the unit package. For indirect shipments, connectors may be ordered without installing and removal tools (see 6.2).

3.4.3 Insert design. The insert and wire sealing or wire supporting member of the connector shall be designed to provide suitable sealing and support around the wires installed in the connector. The design shall permit the removal and replacement of individual contacts into the launcher receptacle and store receptacle insert with the tools defined in 3.4.2.2. Individual contacts in the buffer plug are not removable. The contact locking device shall be sufficient to meet the contact retention requirements of 3.18. Inserts shall be secured in the connector shell to prevent rotation or axial movement.

3.4.4 Sealing.

3.4.4.1 Wire sealing. Assemblies shall be designed to meet the environmental requirements of this specification using wire outer diameter within the applicable range as shown in table I.

TABLE I. Wire sizes and diameters.

Contact Size	Wire size (AWG)	Finished wire outside dimensions			
		Minimum		Maximum	
		mm	Inches	mm	Inches
20	24, 22, 20	1.02	.040	2.11	.083
16	20, 18, 16	1.65	.065	2.77	.109
12 coaxial	14, 12	2.46	.097	3.61	.142
	12 (JN1088WT)	2.46	.097	2.80	.110
8 twinaxial	M17/176-00002	3.15	.124	3.40	.134
	PAN6421	3.15	.124	3.80	.150

3.4.4.2 Sealing plugs. Store receptacles shall be designed to accept sealing plugs in accordance with MS27488 in lieu of wire where unwired contacts are employed. Sealing plugs in accordance with SAE-AS85049/80 for coaxial, triaxial, or concentric twinaxial contact locations may be used to eliminate requiring the installation of an unwired contact in the launcher receptacle or store receptacle. These sealing plugs, when installed in the receptacles, shall not preclude the mating of a buffer plug that is fully populated with pin contacts. Unless otherwise specified in the purchase order, no sealing plugs shall be enclosed with the receptacle package.

3.4.4.3 Mating seal. Connectors with pin inserts shall have a resilient face with individual pin barriers (see figure 2). The pin barrier projections shall seal in their respective lead-in chambers of the hard face socket insert. The resilient interfacial seal shall provide individual contact seals in the mated condition to ensure circuit isolation between each contact and contact to shell. The receptacles shall be provided with a peripheral seal.

3.4.5 Shell. The store receptacle design shall allow mounting of the receptacle flush with the store outer skin. Shells, including mounting flanges, shall be of one-piece construction and shall be designed to retain their inserts in one position, both axially and with respect to rotation, by mechanical means. Adhesive may be used as a supplementary retention means for environmental resisting connectors. Each receptacle connector shall have at least one blue color band in accordance with EIA-RS359, indicating a rear release contact retention system. The blue color band shall be located so that it is readily visible to any person servicing a mounted connector.

3.4.5.1 Shell spring fingers. Spring fingers shall be designed to make electrical contact with the mating shell without interfering with proper engagement. The springs shall be retained about the shell periphery.

3.4.5.2 Jamnut mounting receptacles. Jamnut mounting receptacles shall be provided with a mounting nut, MIL-DTL-83538/6, with provisions for locking, and an O-ring (see SAE-AS3582).

3.4.5.3 Weight. The launcher receptacle shall not exceed 185 grams max. The buffer plug shall not exceed 80 grams max. The store receptacle shall not exceed 185 grams max. These weights include mounting provisions but do not include accessory hardware (such as cable clamps) and do not include the launcher receptacle engagement/disengagement mechanism.

3.4.6 Screw threads. Screw threads shall be in accordance with ISO/R68-1973, ISO/R261-1973, ISO/R262-1973, and ISO/R965-1973, as applicable. Threads shall be checked using ring or plug gauges. Slight out-of-roundness beyond the specified tolerances is acceptable if threads can accept the gauges without forcing.

3.4.7 Installation. The launcher receptacle and associated buffer plug are designed for installation in an engagement/disengagement mechanism in the launcher. This mechanism provides the engagement and retraction forces for mating and unmating the connector assembly. The connector assembly (see figure 1) shall comply with the alignment requirements herein during and after exposure to any logical combination of environment requirements defined herein.

3.4.7.1 Alignment provisions. The launcher receptacle/buffer plug assembly and store receptacle shall include self-alignment provisions. The interface between the launcher receptacle connector and the buffer plug shall be scoop-proof and keyed.

3.4.7.2 Applied holding force. The force required to maintain sufficient mating of the combined launcher receptacle/buffer plug assembly and store receptacle for complying with the requirements herein shall not exceed 271 Newtons (61 pounds). The applied holding force is the maximum force to be applied to the connector set (launcher receptacle / buffer plug/store receptacle) during the vibration test.

3.4.8 Cavity fill. If the rear grommet design does not allow for intimate contact between it and the complete inner perimeter of the shell, any resulting cavity between the insert and the shell shall be filled with RTV silicone in accordance with MIL-A-46146, or equivalent.

3.4.9 Plating.

3.4.9.1 Contacts for buffer plug unit. Contacts shall be gold-plated to a minimum thickness of 0.00127 mm (.000050 inch) in accordance with ASTM B488 over a suitable underplate. Silver underplate shall not be used.

3.4.9.1.1 Crimp contacts. The plating and plating thickness on crimp contacts shall be as specified in SAE-AS39029.

3.4.9.2 Shell spring fingers. Shell spring fingers shall be suitably protected to prevent corrosion.

3.4.9.3 Shell components – launcher receptacle – store receptacle – buffer plug. Shell components shall be nickel plated (electrodeposited nickel) in accordance with SAE-AMS-QQ-N-290.

3.5 Interchangeability. All major components (launcher receptacle, store receptacle, buffer plug unit, accessories and contacts) of the connector assembly having the same PIN shall be completely interchangeable with each other with respect to installation and performance.

3.6 Maintenance aging. When tested as specified in 4.6.2, the contact installing and removal forces shall not exceed the requirements in table II.

3.7 Temperature cycling. When tested as specified in 4.6.3, there shall be no blistering, peeling, or separation of plating or other damage detrimental to the operation of the connector. The test temperatures shall be -65°C minimum to +175°C maximum.

3.8 Coupling.

3.8.1 Coupling torque of bayonet coupled components. When tested as specified in 4.6.4.1, the coupling torque for mating and unmating of the launcher receptacle from the buffer plug and protective covers from launcher receptacle shall be 4.1 Newton-meters (3 ft-lb) maximum and shall be not less than 0.6 Newton-meters (.5 ft-lb) for unmating. The torque for mating and unmating the protective cover from the store receptacle shall be 1.5 Newton-meters (1.2 ft-lb) maximum and shall be not less than 0.3 Newton-meters (.25 ft-lb) for unmating.

TABLE II. Installing and removal forces.

Contact size	Installing and removal forces (maximum)	
	Newtons	Pounds
20	89	20
16	89	20
12	133	30
8 Triaxial	156	35

3.8.2 Coupling force. When tested as specified in 4.6.4.2, the coupling force required for mating the combined launcher receptacle/buffer plug assembly from the store receptacle shall not exceed 271 Newtons (61 pounds).

3.8.3 Decoupling. When tested as specified in 4.6.4.3, the decoupling force required to achieve full physical separation of the combined launcher receptacle/buffer plug assembly from the store receptacle shall not exceed 320 Newtons (72 pounds) when applied along the Z axis ±10º (see figure 3). During this decoupling, the buffer plug shall remain attached to the launcher receptacle.

3.8.4 Self-alignment. When tested as specified in 4.6.4.4, the self-alignment provisions between the launcher receptacle/buffer plug assembly and the store receptacle shall be such that these assemblies will mate even if they are simultaneously initially misaligned by the following (see figure 3 for axis and angle definitions):

X axis: ± 2.03 mm (.08 inch)
Y axis: ± 2.03 mm (.08 inch)
Angle a: ± 3°
Angle b: ± 3°
Angle c: ± 3°

The following cumulative misalignments shall be tested:

1. X, Y, a
2. X, Y, b
3. a, b, c

3.8.5 Maximum holding force. When tested in accordance with 4.6.37, the launcher receptacle, buffer plug, and store receptacle shall be capable of withstanding a holding force of 578 newtons (130 pounds) maximum, without damage that will impair normal operation of the connectors.

3.9 Durability. When tested as specified in 4.6.5, the launcher receptacle and store receptacle shall comply with the performance requirements herein after 500 mating and unmating cycles, at each mating interface.

3.10 Altitude immersion. For qualifications only. When tested as specified in 4.6.6, the mated connector pair shall have a minimum insulation resistance as specified in 3.11.1 and dielectric withstanding voltage as specified in 3.12.

3.11 Insulation resistance.

3.11.1 Insulation resistance at ambient temperature. When tested as specified in 4.6.7.1, the insulation resistance between any pair of contacts and between any contact and the shell shall be greater than 5,000 megohms. Insulation resistance after altitude immersion shall be 1,000 megohms minimum. Insulation resistance after humidity shall be 100 megohms minimum.

3.11.2 Insulation resistance at elevated temperature. When tested as specified in 4.6.7.2, the insulation resistance between any pair of contacts and between any contact and the shell shall be greater than 1,000 megohms.

3.12 Dielectric withstanding voltage. Applies at sea level/altitude. When tested as specified in 4.6.8.1 or 4.6.8.2, the maximum leakage current shall be 2 milliamperes, and there shall be no evidence of electric breakdown or flashover.

3.13 Insert retention. When tested as specified in 4.6.9, unmated connectors shall retain their inserts in their proper location in the shell and there shall be no evidence of cracking, breaking, separation from the shell, or loosening of parts.

3.14 Salt spray corrosion. When tested as specified in 4.6.10, unmated connectors shall show no exposure of basis material due to corrosion which will adversely affect performance.

3.15 Electrical engagement. When tested as specified in 4.6.11, wired, mated connectors shall provide a minimum of 1.27 mm (.050 inch) electrical engagement.

3.16 Gauge location. Using test gauges as specified on figure 4, the axial location of contacts shall be measured as specified in 4.6.12. Gauge location measurements shall fall within the range specified (see 3.1).

3.17 Gauge retention. When tested as specified in 4.6.13, the test gauges as specified on figure 5 shall be retained in the contact cavities and the axial displacement of the test gauges while under load shall not exceed 0.30 mm (.012 inch).

3.18 Contact retention. When tested as specified in 4.6.14, the axial displacement of the contact shall not exceed 0.30 mm (.012 inch). No damage to contacts or inserts shall result.

3.19 Altitude low temperature. When tested as specified in 4.6.15, the connector shall meet the requirements of dielectric withstanding voltage at sea level specified in 3.12 and insulation resistance at ambient temperature specified in 3.11.

3.20 Accessory thread strength. Applicable to MIL-DTL-83538/4 receptacles only to verify the rear threads. When tested as specified in 4.6.16, the receptacles shall be capable of withstanding a torque of 28.3 $\pm$ 2.8 Newton-meters (20 $\pm$ 2 ft-lb). There shall be no damage to the threads.

3.21 Vibration. Qualification only. When tested as specified in 4.6.17, there shall be no electrical discontinuity and there shall be no disengagement of the mated connectors, backing off of the coupling mechanism, evidence of cracking, breaking, or loosening of parts.

3.22 Shock. When tested as specified in 4.6.18, there shall be no electrical discontinuity and there shall be no disengagement of the mated connectors, evidence of cracking, breaking, or loosening of parts.

3.23 Shell-to-shell conductivity. Not applicable to MIL-DTL-83538/11 buffer plug. When tested as specified in 4.6.19, the resistance from launcher receptacle shell to the buffer plug of a mated launcher receptacle/buffer plug assembly shall not exceed 2.5 milliohms. The resistance from the launcher receptacle rear threads or the nearest accessible point to the store receptacle rear threads shall not exceed 8 milliohms. After conditioning (salt spray and coupling torque) the above values may increase 100 percent.

3.24 Humidity. When tested as specified in 4.6.20, wired, mated connectors shall show no deterioration which will adversely affect performance of the connector. Following the test, and during the final cycle, insulation resistance shall be 100 megohms or greater.

3.25 Shell spring finger forces. When tested as specified in 4.6.21, the forces necessary to engage and separate plugs with receptacle shells shall be within the axial force of 2 Newtons (.5 pound) minimum, and 156 newtons (35 pounds) maximum.

3.26 EMI shielding. When tested as specified in 4.6.22, the EMI shielding capabilities of mated shells shall be not less than that specified in table III at the specified frequencies.

3.27 Insertion loss. This test is only applicable when the MIL-DTL-83538/3 buffer is part of the set under test. When tested as specified in 4.6.23, the mated connector shall comply with the applicable contact resistance requirements of SAE-AS39029 for all contacts except the total allowed resistance though the combined mated triplet of launcher receptacle with buffer plug, and store receptacle with buffer plug shall not exceed 1.5 times the limit of SAE-AS39029 for the applicable size contacts. In addition, the coaxial contacts for the high bandwidth signals shall provide a maximum attenuation of:

High bandwidth 1, referenced to 50 ohms:
20 Hz to 20 MHz measured insertion loss shall not exceed 0.20 dB.
20 MHz to 500 MHz measured insertion loss shall not exceed 0.12 dB.
500 MHz to 2 GHz the measured insertion loss shall not exceed
0.11 dB x $\sqrt{F}$, where F is the test frequency in GHz.

TABLE III. EMI shielding effectiveness.

Frequency MHz	Leakage attenuation (dB) minimum
0.2 to 100	90
200	88
300	88
400	87
800	85
1,000	85
1,500	69
2,000	65
3,000	61
4,000	58
6,000	55
10,000	50

3.27 Insertion loss. This test is only applicable when the MIL-DTL-83538/3 buffer is part of the set under test. When tested as specified in 4.6.23, the mated connector shall comply with the applicable contact resistance requirements of SAE-AS39029 for all contacts except the total allowed resistance though the combined mated triplet of launcher receptacle with buffer plug, and store receptacle with buffer plug shall not exceed 1.5 times the limit of SAE-AS39029 for the applicable size contacts. In addition, the coaxial contacts for the high bandwidth signals shall provide a maximum attenuation of:

High bandwidth 1, referenced to 50 ohms:
20 Hz to 20 MHz measured insertion loss shall not exceed 0.20 dB.
20 MHz to 500 MHz measured insertion loss shall not exceed 0.12 dB.
500 MHz to 2 GHz the measured insertion loss shall not exceed
0.11 dB x $\sqrt{F}$, where F is the test frequency in GHz.

3.28 Voltage standing wave ratio. This test is only applicable when the MIL-DTL-83538/3 buffer is part of the set under test. When tested as specified in 4.6.24, the mated connector sets shall provide a maximum voltage standing wave ratio (VSWR) of 1.75 for the high bandwidth signals over the frequency range of 20 Hz to 2 GHz for high bandwidth 1 referenced to 50 ohms.

3.29 Ozone. When tested as specified in 4.6.25, the connectors shall show no evidence of cracking of dielectric material or other damage due to ozone exposure that will adversely affect performance.

3.30 Fluid immersion. When tested as specified in 4.6.26, connectors shall meet the requirements for coupling torque (see 3.8) and dielectric withstanding voltage (see 3.12).

3.30.1 Retention system fluid immersion. When tested as specified in 4.6.27, the insert assemblies shall meet the requirements of contact retention (see 3.18). Effects of the fluids on resilient sealing members shall not be a consideration of this test.

3.31 Contact walkout. When tested as specified in 4.6.28, contacts shall not become dislodged from their normal position.

3.32 Installing and removal tool abuse. Qualifications only. When tested as specified in 4.6.29, there shall be no evidence of damage to the contacts, the connector insert, or the contact retaining mechanism.

3.33 High temperature exposure. See 4.6.30.

3.33.1 High temperature exposure with contact loading. When tested as specified in 4.6.30.1, the contacts shall maintain their specified locations as shown (see 3.1) and there shall be no electrical discontinuity.

3.33.2 High temperature exposure for connectors. When tested as specified in 4.6.30.2 for 1,000 hours, connectors shall perform satisfactorily and pass succeeding tests in the qualification test sequence.

3.34 Electrolytic erosion. When tested as specified in 4.6.31, pin contacts shall show no exposure of base metal due to electrolytic erosion. Corrosion deposits shall not be considered as defects.

3.35 Icing and freezing rain. When tested as specified in 4.6.32, the connector assembly shall withstand the icing and freezing rain environment (sea spray condition) specified in 4.6.32. The force required to separate the connector shall not exceed 334 Newtons (75 pounds).

3.36 Sand and dust. When tested as specified in 4.6.33, the connector assembly shall withstand the blowing dust and blowing sand conditions of MIL-STD-810, method 510. Blowing dust air velocity shall be 8.9 meters/second minimum. The blowing sand air velocity shall be 29 meters/second minimum with a sand concentration of 2.2 $\pm$0.5 grams/cubic meter. Immediately following this exposure, the coupling force and decoupling force shall not exceed the requirements specified herein (see 3.8.2 and 3.8.3) by more than 25 percent.

3.37 Launcher drive pin strength. Applies to MIL-DTL-83538/4 receptacle only. When tested as specified in 4.6.36, the launcher drive pins shall show no evidence of permanent deformation or damage such as would impair the operation of the connector or launcher mechanism.

3.38 Lightning strike. Not applicable to the MIL-DTL-83538/11 buffer plug. The connector set shall show no damage or degradation in performance, including seizing, pitting, or damage to the insulation of the connector when subjected to the lightening strike requirements specified in 4.6.38. Connectors shall be mated and unmated in accordance with the requirements of 3.8.1 and 3.8.3 without recourse to tools, except for MIL-DTL-83538/12. Failure to unmate the connectors because they have welded together shall constitute a test failure.

3.39 Electrical Integrity. Applicable to MIL-DTL-83538/3 and /11 buffer plugs only.

3.39.1 Electrical resistance. When tested in accordance with 4.6.39, the electrical resistance of the contact path of an assembled connector set comprising; Launcher Receptacle, Buffer plug and Store Receptacle shall be as follows: For the MIL-DTL-83538/3 buffer plug, the electrical resistance shall be not greater than 27 milliohm for size 20 contacts and 15 milliohm for size 16 contacts. For the MIL-DTL-83538/11 buffer plug, the electrical resistance shall be not greater than 36 milliohm for size 20 contacts and 20 milliohm for size 16 contacts.

3.39.2 Applied high current. When tested as specified in 4.6.40, the MIL-DTL-83538/11 buffer plug shall show no evidence of permanent deterioration of electrical continuity through their contact locations.

3.40 Contact location identification. Contact locations shall be identified as indicated on the applicable military standard. All positions shall be identified on the front and rear faces of the insert except where space limitations make this impracticable. Location of contact identifying characters shall be in close proximity to the holes but need not be placed exactly where indicated on the standard. The preferred color of the contact identifying character is white. When the background is a color against which white is difficult to distinguish, a color will be chosen for which the identifying character can be easily distinguished.

3.40.1 JAN and J marking. The United States Government has adopted and is exercising legitimate control over the certification marks "JAN" and "J", respectively, to indicate that items so marked or identified are manufactured to, and meet all the requirements of specifications. Accordingly, items acquired to, and meeting all of the criteria specified herein and in applicable specifications shall bear the certification mark "JAN" except that items too small to bear the certification mark "JAN" shall bear the letter "J". The "JAN" or "J" shall be placed immediately before the PIN except that if such location would place a hardship on the manufacturer in connection with such marking, the "JAN" or "J" may be located on the first line above or below the PIN. Items furnished under contracts or orders which either permit or require deviation from the conditions or requirements specified herein or in applicable specifications shall not bear "JAN" or "J". In the event an item fails to meet the requirements of this specification and the applicable specification sheets, the manufacturer shall remove completely the military PIN and the "JAN" or the "J" from the sample tested and also from all items represented by the sample. The "JAN" or "J" certification mark shall not be used on products acquired to contractor drawings or specification. The United States Government has obtained Certificate of Registration Number 504,860 for the certification mark "JAN" and Registration Number 1,586,261 for the certification mark “J”.

3.41 Dust caps. Dust caps in accordance with MIL-DTL-83538/12 shall be placed over the coupling ring of buffer plugs. Dust caps in accordance with SAE-AS90376 shall be placed over all other mating connector faces.

3.42 Workmanship. The connector assembly and associated components shall be fabricated in a manner such that the criteria for appearance, fit and adherence to specified tolerances are observed. Particular attention shall be given to neatness and thoroughness of marking parts, plating, welding, soldering, reviting, staking, and bonding. The connector components shall be free from crazing, cracks, knit-lines, flow-lines, voids, pimples, chips, blisters, pinholes, sharp cutting edges, burrs, and other defects that will adversely affect life, serviceability, or appearance.

3.43 Pure tin. The use of pure tin, as an underplate or final finish, is prohibited both internally and externally. Tin content of connector components and solder shall not exceed 97 percent, by mass. Tin shall be alloyed with a minimum of 3 percent lead, by mass (see 6.11).

3.44 Change effectivity. Unless otherwise specified by the preparing activity and/or the qualifying activity, all changes from the previous revision of MIL-DTL-83538 shall become effective within 90 days from the date of publication of the latest revision. QPL listed Manufacturers who have concerns regarding possible changes to retention reporting requirements, should contact the Qualifying Activity for clarification.

3.45 Disposition of stock. Unless otherwise specified by the preparing activity and/or the qualifying activity, qualified manufacturers and their selling agents or distributors may ship from stock; connectors and accessories which were manufactured in accordance with the previous revision of MIL-DTL-83538 for a period of 18 months from the date of the latest revision.

3.46 Marking. The launcher receptacle, store receptacle, buffer plug unit, and accessories should be permanently marked with the manufacturer's name or trademark, date code, and the following information, as applicable (see 1.1.1 and 3.40.1). Stamping should be in accordance with MIL-STD-1285 where space permits.

4. VERIFICATION

4.1 Classification of inspections. The inspection requirements specified herein are classified as follows:

a. Qualification inspection (see 4.4).
b. Conformance inspections (see 4.5).

4.2 Inspection conditions. Unless otherwise specified herein, all inspections shall be performed in accordance with the test conditions specified in the "GENERAL REQUIREMENTS" of EIA-364.

4.3 Test equipment and inspection facilities. Test and measuring equipment and inspection facilities of sufficient accuracy, quality, and quantity to permit performance of the required inspections shall be established and maintained by the contractor. The establishment and maintenance of a calibration system to control the accuracy of the measuring and test equipment shall be in accordance with ISO-10012-1 or equivalent system.

4.3.1 Established reliability assurance program. A reliability assurance program shall be established and maintained in accordance with MIL-STD-790. Evidence of such compliance shall be verified by the qualifying activity of this specification as a prerequisite for qualification and continued qualification.

4.3.1.1 Statistical process control. A statistical process control (SPC) program shall be established and maintained in accordance with EIA-557. Evidence of such compliance shall be verified by the qualifying activity as a prerequisite for qualification and retention of qualification.

4.3.2 Fungus resistance certification. Certification of method 508.4 of MIL-STD-810 is required (see 3.3.5).

4.4 Qualification inspection. Qualification inspection shall be performed at a laboratory acceptable to the qualifying activity (see 6.3) on sample units produced with equipment and procedures normally used in production. Qualification approval may be granted upon successful completion of the inspections and tests of 4.4.3 conducted on samples of 4.4.1; such approval to include classes, finishes, shell configurations, and insert arrangements other than those actually tested providing that the capability to manufacture these parts is demonstrated by providing exhibit samples. Subject to Qualification Activity approval, QPL sources on MIL-DTL-38999 series III connectors, may obtain qualification by similarity on the 25-20 insert.

Subject to qualification activity approval, sources that qualify MIL-DTL-83538/4 styles A and C, may obtain qualification by similarity for styles B & D respectively. Also, Subject to qualification activity approval, sources that qualify MIL-DTL-83538/1 type 2, may obtain qualification by similarity on type 1. Manufacturers seeking qualification by similarity shall also be required to submit a signed and dated statement (signed by a company senior executive on company letterhead) certifying that all materials utilized in the fabrication and assembly of the insert, the manufacturing procedures, and the design of the insert retention system are identical to the QPL approved 25-20 insert arrangement in accordance with MIL-DTL-38999. Furthermore, this statement shall also include a reference to the specific QPL listing and test report number.

4.4.1 Preparation of samples. Except as otherwise specified for shielded contacts, wiring of crimp-type contacts shall be accomplished using tools in accordance with MIL-DTL-22520, class I. The length of stripped portion of conductor shall be at least long enough to reach the bottom of the crimp barrel, but shall not be so long that more than 0.79 mm (.031 inch) of conductor is exposed at end of the barrel when conductor end touches bottom of barrel. Samples provided as specified in 4.4.2 shall be wired with wire having a smooth extruded jacket of waterproof construction. Two samples shall have wires as listed for maximum diameter and the other two samples shall have wires as listed for minimum diameter in table IV. Two power contact cavities of each sample provided shall contain unwired contacts and contain sealing plugs in accordance with MS27488. In the case of the size 8 and size 12 contact sizes, in order to satisfy certain aircraft requirements, the connectors shall be wired with a mixture of wires from Military Specifications and JN and/or PAN specifications (see table V). The location of each wire source shall be recorded for each location and reported in the final test report.

TABLE IV. Test wire sizes.

Contact size	Maximum diameter	Minimum diameter
20	M22759/7-20 M22759/8-20	M22759/18, /19, /32, /33 -22 M22759/44, /45, /46 -22 M22759/11, /12, /13, /14 -24 M22759/22, /23
16	M22759/3, /4, /7, or /8 -16	M22759/18, /19, /32, M22759/44, /45 -16
12 coaxial/shielded	M17/94-RG179 M17/113-RG316 JN1088	M17/94-RG179 M17/113-R316 JN1088
8 twinaxial	M17/176-00002 PAN6421	M17/176-00002 PAN6421

TABLE V. Contact locations and cable types.

Contact	Locations	Cable type
M39029/91	A, K,	M17/176-00002
M39029/103	W, 5	M17/113 – RG316
JN1057S	H	PAN6421
JN1104S50C	3, 2	JN1088WT

4.4.2 Sample size. The following test samples, manufactured by normal production methods, shall be provided. Tested and untested connectors, accessories and materials may be required at no cost to the Government for qualification verification by the responsible qualification activity (see 6.3).

a. Each test group (except groups 4 and 5) in table VI shall consist of four mating sets as follows: For each buffer style being qualified, 2 sets shall contain the MIL-DTL-83538/3 buffer plug and 2 sets shall contain the MIL-DTL-83538/11 buffer plug (see 4.4.2e) of the combined launcher receptacle, buffer plug and store receptacle. Connectors shall be fitted with SAE-AS85049 straight strain relief accessories. Where buffer adapter connectors (MIL-DTL-83538/11) are used, the mating store receptacle shall be of the AIM-120 receptacle style or the test fixture as specified in 4.6.1.2, which mates with the store end of the adapter. Any failure of this connector or the test fixture shall not be considered a failure of MIL-DTL-83538 parts.

b. Test group 4 in table VI shall consist of 10 mating sets of the combined launcher receptacle /buffer plug and store receptacle. Where qualification by similarity is claimed for the receptacle inserts (20-25 insert), the samples for this test can be reduced to buffer plugs only. In the case of the MIL-DTL-83538/11 buffer, 10 samples of the individual or standalone MIL-DTL-83538/11 buffer plug shall be tested.

c. Test group 5 in table VI shall consist of 10 (20-25) inserts. Where qualification by similarity is claimed for the receptacle inserts, the samples for this test can be reduced to buffer plugs only. In the case of the MIL-DTL-83538/11 buffer, 10 samples of the individual or standalone MIL-DTL-83538/11 buffer plug shall be tested.

d. Test group 7 in table VI shall consist of 4 mating sets (2 sets containing the MIL-DTL-83538/3 buffer plug and 2 sets containing the MIL-DTL-83538/11 buffer plug, see 4.4.2e) of the combined launcher receptacle, buffer plug and store receptacle.

e. Test assemblies shall consist of the following:

(1) The first 2 assemblies shall comprise:
   a. A clamp (JN1092HS23) or a suitable straight clamp in accordance with SAE-AS85049 (where applicable).
   b. An adapter in accordance with MIL-DTL-83538/9, style C (where applicable).
   c. A launcher receptacle in accordance with MIL-DTL-83538/4, style A or style B.
   d. A hybrid buffer plug in accordance with MIL-DTL-83538/11.
   e. A store receptacle in accordance with 4.4.2a.

(2) The second 2 assemblies shall comprise:
   a. A clamp (PIN: JN1092HS23) or a suitable straight clamp in accordance with SAE-AS85049 (where applicable).
   b. An adapter in accordance with MIL-DTL-83538/9, style C (where applicable).
   c. A launcher receptacle in accordance with MIL-DTL-83538/4, style A or style B.
   d. A buffer plug in accordance with MIL-DTL-83538/3.
   e. A store receptacle in accordance with MIL-DTL-83538/1

4.4.3 Test routine. Samples provided in accordance with 4.4.2 shall be subjected to each test group in table VI in the order shown.

4.4.3.1 Failures. One or more failures shall be cause for refusal to grant qualification.

4.4.4 Retention of qualification. To retain qualification, the contractor shall forward a report at least every 12 months to the qualifying activity. The qualifying activity shall establish the reporting date. The report shall consist of the following:

a. A summary report of the results of the test performed for groups A and B inspection indicating, as a minimum, the number of lots that have passed and the number that have failed. The results of tests of all reworked lots shall be identified and accounted for.

b. A report of the results of tests performed for group C inspection including the number and mode of failures. The report shall include results of all group C inspection tests performed and completed during the reporting period. If the report of the test results indicates nonconformance with specification requirements, and corrective action acceptable to the qualifying activity has not been taken, action may be taken to remove the failing product from the qualified products list. Failure to submit the report within 30 days after the end of each reporting period may result in loss of qualification for the product. In addition to the periodic submission of inspection data, the contractor shall immediately notify the qualifying activity if at any time during the reporting period that the inspection data indicates failure of the qualified product to meet the requirements of this specification.

   In the event that no production occurred during the 12-month reporting period, a report shall be submitted certifying that the company still has capabilities and facilities necessary to produce the item. If during two consecutive reporting periods there has been no production, the manufacturer may be required, at the discretion of the qualifying activity, to submit the products (a representative product of each connector) to testing in accordance with qualification inspection requirements.

TABLE VI. Qualification and group C periodic test.

Inspection	Requirement paragraph	Test method paragraph
Group 1		
Visual and mechanical examination	3.1, 3.3, 3.4, 3.4.5.3, 3.4.6, 3.5, 3.42, 3.46	4.6.1
Magnetic permeability	3.3.6	4.6.34
Self-alignment	3.8.4	4.6.4.4
Maintenance aging 1/	3.6	4.6.2
Temperature cycling	3.7	4.6.3
Electrical resistance 2/	3.39.1	4.6.39
Applied high current 7/	3.39.2	4.6.40
Electrical resistance 2/ 7/	3.39.1	4.6.39
Coupling torque of bayonet coupled components 6/	3.8.1	4.6.4.1
Durability	3.9	4.6.5
Altitude immersion 2/	3.10	4.6.6
Insulation resistance at ambient temperature	3.11.1	4.6.7.1
Dielectric withstanding voltage (at sea level)	3.12	4.6.8.1
Insert retention	3.13	4.6.9
Shell-to-shell conductivity 6/	3.23	4.6.19
Salt spray corrosion	3.14	4.6.10
Coupling force 6/	3.8.2	4.6.4.2
Shell-to-shell conductivity 6/	3.23	4.6.19
Decoupling 6/	3.8.3	4.6.4.3
Electrical engagement 3/	3.15	4.6.11
Post test examination	3.46, 3.42	4.6.35

See footnotes at end of table.

TABLE VI. Qualification and group C periodic test - Continued.

Inspection	Requirement paragraph	Test method paragraph
Group 2		
Visual and mechanical examination	3.1, 3.3, 3.4, 3.4.5.3, 3.4.6, 3.5, 3.42, 3.46	4.6.1
Gauge location	3.16	4.6.12
Gauge retention 1/	3.17	4.6.13
Maintenance aging 1/	3.6	4.6.2
Contact retention	3.18	4.6.14
Altitude (low temperature)	3.19	4.6.15
Insulation resistance at ambient temperature	3.11.1	4.6.7.1
Dielectric withstanding voltage (at sea level)	3.12	4.6.8.1
Electrical resistance	3.39.1	4.6.39
Temperature cycling	3.7	4.6.3
Coupling torque of bayonet coupled components	3.8.1	4.6.4.1
Insulation resistance at elevated temperature	3.11.2	4.6.7.2
Dielectric withstanding voltage (at sea level)	3.12	4.6.8.1
Dielectric withstanding voltage at altitude	3.12	4.6.8.2
Durability	3.9	4.6.5
Insertion loss	3.27	4.6.23
Voltage standing wave ratio 4/	3.28	4.6.24
Accessory thread strength	3.20	4.6.16
Vibration 2/ 5/	3.21	4.6.17.1 or 4.6.17.2
Shock	3.22	4.6.18
Shell-to-shell conductivity	3.23	4.6.19
High temperature exposure 2/	3.33	4.6.30
Humidity	3.24	4.6.20
Insulation resistance at ambient temperature	3.11.1	4.6.7.1
Dielectric withstanding voltage (at sea level)	3.12	4.6.8.1
Contact retention 2/	3.18	4.6.14
Post test examination	3.46, 3.42	4.6.35
Group 3		
Visual and mechanical examination	3.1, 3.3, 3.4, 3.4.5.3, 3.4.6, 3.5, 3.42, 3.46	4.6.1
Durability	3.9	4.6.5
Shell spring finger forces	3.25	4.6.21
Shell-to-shell conductivity	3.23	4.6.19
Salt spray (corrosion)	3.14	4.6.10
Launcher drive pin strength	3.37	4.6.36
Maximum holding force	3.8.5	4.6.37
Shell-to-shell conductivity	3.23	4.6.19
EMI shielding 4/	3.26	4.6.22
Post test examination	3.46, 3.42	4.6.35

See footnotes at end of table.

TABLE VI. Qualification and group C periodic test - Continued.

Inspection	Requirement paragraph	Test method paragraph
Group 4 8/		
Visual and mechanical examination	3.1, 3.3, 3.4, 3.4.5.3, 3.4.6, 3.5, 3.42, 3.46	4.6.1
Ozone exposure	3.29	4.6.25
Insulation resistance at ambient temperature	3.11.1	4.6.7.1
Dielectric withstanding voltage (at sea level)	3.12	4.6.8.1
Fluid immersion	3.30	4.6.26
Dielectric withstanding voltage (at sea level)	3.12	4.6.8.1
Coupling torque of bayonet coupled component	3.8.1	4.6.4.1
Post test examination	3.46, 3.42	4.6.35
Group 5 8/		
Visual and mechanical examination	3.1, 3.3, 3.4, 3.4.5.3, 3.4.6, 3.5, 3.42, 3.46	4.6.1
Retention system fluid immersion	3.30.1	4.6.27
Contact retention	3.18	4.6.14
Post test examination	3.46, 3.42	4.6.35
Group 6		
Visual and mechanical examination	3.1, 3.3, 3.4, 3.4.5.3, 3.4.6, 3.5, 3.42, 3.46	4.6.1
Contact walkout	3.31	4.6.28
Installing and removal tool abuse 2/	3.32	4.6.29
High temperature exposure with contact loading	3.33.1	4.6.30.1
Insert retention	3.13	4.6.9
Post test examination	3.46, 3.42	4.6.35
Group 7:		
Visual and mechanical examination	3.1, 3.3, 3.4, 3.4.5.3, 3.4.6, 3.5, 3.42, 3.46	4.6.1
Dielectric withstanding voltage (at sea level)	3.12	4.6.8.1
Salt spray (corrosion)	3.14	4.6.10
Coupling torque of bayonet coupled components	3.8.1	4.6.4.1
Electrolytic erosion 4/	3.34	4.6.31
Post test examination	3.46, 3.42	4.6.35

See footnotes at end of table.

TABLE VI. Qualification and group C periodic test – Continued.

Inspection	Requirement paragraph	Test method paragraph
Group 8 2/		
Visual and mechanical examination	3.1, 3.3, 3.4, 3.4.5.3, 3.4.6, 3.5, 3.42, 3.46	4.6.1
Ice and freezing rain	3.35	4.6.32
Sand and dust	3.36	4.6.33
Coupling torque of bayonet coupled component	3.8.1	4.6.4.1
Post test examination	3.46, 3.42	4.6.35
Group 9 4/		
Visual and mechanical examination	3.1, 3.3, 3.4, 3.4.5.3, 3.4.6, 3.5, 3.42, 3.46	4.6.1
Durability	3.9	4.6.5
Salt spray (corrosion)	3.14	4.6.10
Lightning strike	3.38	4.6.38
Shell-to-shell conductivity	3.23	4.6.19
Decoupling	3.8.3	4.6.4.3
Coupling torque of bayonet coupled components	3.8.1	4.6.4.1
Dielectric withstanding voltage at sea level	3.12	4.6.8.1
Post test examination	3.46, 3.42	4.6.35
Group 10:		
Visual and mechanical examination	3.1, 3.3, 3.4, 3.4.5.3, 3.4.6, 3.5, 3.42, 3.46	4.6.1
Gunfire vibration	3.21	4.6.17.3
Dielectric withstanding voltage (at sea level)	3.12	4.6.8.1
Electrical resistance	3.39.1	4.6.39
Insulation resistance at elevated temperature	3.11.2	4.6.7.2
Post test examination	3.46, 3.42	4.6.35

1/ Receptacles (sockets) only.
2/ Qualification only.
3/ Test on MIL-DTL-83538/11 store interface for information only.
4/ Not connector sets incorporating MIL-DTL-83538/11.
5/ One launcher receptacle from a set to be fitted with MIL-DTL-83538/8 cover for the duration of the vibration test.
6/ Not applicable to the AIM-120 connector stack (i.e. AIM-120, MIL-DTL-83538/11 and MIL-DTL-83538/4).
7/ Not applicable to the standard connector stack (i.e. MIL-DTL-83538/1, MIL-DTL-83538/3 and MIL-DTL-83538/4).
8/ In lieu of conducting groups 4 and 5 qualification and periodic testing (i.e. initial qual and group C), manufacturers who are already qualified to insert 20-25 under MIL-DTL-38999 can submit a request for qualification by similarity including a reference to the specific QPL listing and test report number.

4.5 Conformance inspections.

4.5.1 Group A inspection. Group A inspection shall consist of the visual and mechanical inspections specified in table VII. The documentation requirements of EIA-364 do not apply.

TABLE VII. Group A inspection. 1/

Inspection	Requirement paragraph	Test paragraph
Visual and mechanical examination 2/	3.1, 3.3, 3.4, 3.4.5.3, 3.4.6, 3.5, 3.42, 3.46	4.6.1
Critical examination 2/ 3/	3.1, 3.2.1, and 3.3	4.5.1.1.1
Insulation resistance at ambient temperature 2/ 3/ 4/	3.11.1	4.6.7.1
Dielectric withstanding voltage at sea level 2/ 3/ 4/	3.12	4.6.8.1
Electrical resistance 2/	3.39.1	4.6.39

1/ Contacts shipped with connectors shall be from lots that have met the requirements as specified in SAE-AS39029.
2/ 100 percent inspection.
3/ The contractor may use in-process controls for this requirement.
4/ Test between adjacent contacts and between two peripheral contacts and the shell.

4.5.1.1 Visual examination. Group A inspection. Each connector and accessory shall be visually examined for completeness, workmanship, and identification requirements. Attention shall be given to those assemblies that require a gasket to determine the condition of the gasket. Gaskets missing, twisted, buckled, kinked, or damaged in any way shall be cause for rejection. Each connector shall be visually inspected for the presence of compound between wire termination end of insert and shell.

4.5.1.1.1 Critical examinations. Group A inspection. The following dimensions and features shown on the pertinent military standard are considered critical.

a. Mating diameters (see 3.1) (maximum on plugs, minimum on receptacles).
b. Key or keyway positions.
c. Registration of grommet and insert markings (hole pattern between the grommet and the front face of the insert).

4.5.1.2 Group B inspection. Group B inspection shall consist of the inspections specified in table VIII in the order shown and shall be made on sample units which have been subjected to and have passed the group A inspection. For group B inspection, the documentation and standard test conditions of EIA-364 do not apply.

4.5.1.2.1 Sampling plan (group B inspection). A sample size shall be randomly selected as specified in table IX. If one or more defects are found the lot shall be rescreened and defects removed. A new sample as specified in table IX shall then be randomly selected. If one or more defects are found in the second sample the lot shall be rejected and shall not be supplied to this specification.

4.5.1.2.2 Lot definition (Group B inspection). The production lot definition as specified in MIL-STD-790 is further defined as follows:

a. A production lot consists of all connectors covered under one military specification or standard, manufactured from the specified raw materials, processed under the same specification and procedures, produced by the same type of equipment, and submitted for inspection at one time. Each production lot of assembled connectors shall be a group identified by a common manufacturing record through all significant assembly operations.
b. Traceability of connectors to specific physical/chemical test reports of incoming raw material is not required.
c. Common manufacturing records and traceability shall begin with the start of connector assembly.

TABLE VIII. Group B inspection.

Inspection	Requirement paragraph	Test paragraph	Number of samples
Visual and mechanical examination 1/	3.1, 3.3, 3.4, 3.4.5.3, 3.4.6, 3.5, 3.42, 3.46	4.6.1	See table IX
Shell spring finger forces (receptacles with spring fingers only) 1/	3.25	4.6.21	

1/ The contractor may use in-house controls for this requirement.

TABLE IX. Sampling plans.

Lot size	Sample size
1 to 13	100 percent
14 to 150	13 units
151 to 280	20 units
281 to 500	29 units
501 to 1,200	34 units
1,201 to 3,200	42 units

4.5.1.2.3 Disposition of sample units. Sample units which have passed all of group B inspections may be delivered on the contract or purchase order if the lot is accepted and the sample units are still within specified tolerances.

4.5.2 Periodic inspection. Periodic inspection shall consist of group C inspection. Except where the results of this inspection show noncompliance with the applicable requirements (see 4.5.2.1.4), delivery of products which have passed groups A and B inspections shall not be delayed pending the results of this periodic inspections.

4.5.2.1 Group C inspection. Periodic tests for group C inspections shall be performed on a 12-month and 24-month basis, beginning with the 12-month periodic test, which must be accomplished within this period after notification of qualification and alternating thereafter with the 24-month periodic test. Samples submitted to either of these periodic tests shall have passed groups A and B inspections.

4.5.2.1.1 Twelve-month periodic test. The following tests shall be performed as follows:

a. On two mating sets of the combined launcher receptacle, buffer plug and the store receptacle in regular production during that period - humidity in accordance with 4.6.20.
b. On two mating sets of the combined launcher receptacle, buffer plug and store receptacle - high temperature exposure with contact loading in accordance with 4.6.30.1, except that the time period shall be 250 hours.
c. On two mating sets of the combined launcher receptacle, buffer plug and store receptacle, each set being subjected to each of the specified fluids (see table X). Fluid immersion shall be in accordance with 4.6.26 except that the fluids shall be:

TABLE X. Test fluids.

Sample number	Test fluid (test procedure EIA-364-10)
1	c
2	d
3	a
4	l
5	e
6	f
7	b
8	k
9	g
10	i

d. On one launcher receptacle, buffer plug and store receptacle conduct the salt spray test of 4.6.10.
e. One mated set of launcher receptacle, buffer plug and store receptacle shall be subjected to the coupling test.

4.5.2.1.2 Twenty-four month periodic tests. Every 24 months, mating connector sample units shall be selected and tested in accordance with the following:

a. Three mating sets of the combined launcher receptacle, buffer plug and store receptacle shall be provided. One set shall be fully wired with the applicable wire listed in maximum diameter column in table IV and subjected to the applicable tests in table VI, group 1. The remaining sample sets shall be fully wired with the applicable wire listed in minimum diameter column in table IV and subjected to the applicable tests in table VI, group 2.
b. On one launcher receptacle, buffer plug and store receptacle conduct the salt spray test of 4.6.10.

4.5.2.1.3 Failures. If one or more sample units fail to pass group C inspection, the sample shall be considered to have failed.

4.5.2.1.4 Noncompliance. If a sample fails to pass group C inspection, the manufacturer shall take corrective action on the materials or processes or both, as warranted, and on all units of product which are to be corrected and which were manufactured with essentially the same materials and processes, and which are considered subject to the same failure. Acceptance and shipment of the product shall be discontinued until corrective action acceptable to the qualifying activity has been taken. After the corrective action has been taken, group C inspection shall be repeated on additional sample units (all inspections, or the inspection which the original sample failed, at the option of the qualifying activity). Groups A and B inspections may be reinstituted; however, final acceptance shall be withheld until the group C reinspection has shown that corrective action was successful. In the event of failure after reinspection, information concerning the failure shall be furnished to the cognizant inspection activity and the qualifying activity.

4.5.3 Failures of groups A, B, or C. Lots which fail groups A, B, or C and are not resubmitted for testing or failed resubmission shall not be shipped and the "JAN" marking shall be removed within 30 days.

4.6 Methods of inspection.

4.6.1 Visual and mechanical examination. Connectors, accessories, and piece parts shall be visually and mechanically examined to ensure conformance with the specification and the applicable military standards (see 1.1.1, 3.1, 3.3, 3.4, 3.5, and 3.41). The contractor may use in process controls to satisfy these requirements.

4.6.1.1 Test methods. The following identified tests and methods assure connector integrity within typical operating conditions and applications. Alternate commercial industry standard test methods are allowed when determined to provide equivalent results; however when an alternate method is used, the qualifying activity must be notified prior to the performance of the test. The test methods described herein are proven methods and shall be the referee methods in case of dispute.

4.6.1.2 Qualification test fixture for MIL-DTL-83538/11 buffer plug. The MIL-DTL-83538/11 buffer plug shall be subjected to the test methods specified in MIL-DTL-83538 as applicable, using the test fixture described on figure 8, or a suitable mating missile receptacle. A failure of the qualification test fixture, or the mating missile receptacle, does not constitute a failure of the MIL-DTL-83538/11 buffer plug.

4.6.2 Maintenance aging. Connectors shall be tested in accordance with test procedure EIA-364-24. The following detail shall apply: Installing/removal tool shall be in accordance with MIL-I-81969/14. A minimum of 20 percent of each contact size of each connector shall be tested. There shall be no lubricant used during this test (see 3.6).

4.6.3 Temperature cycling. Mated connectors shall be subjected to test procedure EIA-364-32, test condition V, 5 cycles, except that steps 2 and 4 shall be of 2 minutes maximum duration. The temperature of step 1 shall be -65°C +0°C -5°C, and the temperature of step 3 shall be +175°C +5°C -0°C. The time for steps 1 and 3 shall be one hour duration for each step. A suitable fixture shall apply the mating force specified in 3.4.7.2. During the last 30 minutes of step 1 and step 3, all high current contact paths shall be subjected to a continuous current of 12.0 amperes (see 3.7).

4.6.4 Coupling. Mating connectors shall be coupled and uncoupled. The forces or torques which must be applied to facilitate full coupling and uncoupled shall be measured and recorded (see 3.8).

4.6.4.1 Coupling torque of bayonet coupled component. Mating connectors shall be coupled and uncoupled. The torques which must be applied to facilitate full coupling and uncoupling shall be as specified in 3.8.1.

4.6.4.2 Coupling force. Mating connectors shall be coupled and uncoupled. The forces which must be applied to facilitate full coupling and uncoupling shall be as specified in 3.8.2.

4.6.4.3 Decoupling. Using an appropriate test fixture that can apply up to a 320 Newton force, the connector halves shall physically and completely separate after the application of the 320 Newton force (see 3.8.3).

4.6.4.4 Self-alignment. The connector shall be tested for compliance with the alignment provisions of 3.8.4 by mounting the launcher receptacle with attached buffer in a fixed mounting assembly and mounting the store receptacle in an adjustable but fixed mount assembly.

4.6.5 Durability. The wired, assembled launcher receptacles (with buffer plug) and store receptacles shall be mated and unmated 500 cycles at a rate of 300 cycles per hour maximum. The mating and unmating shall be accomplished so that the launcher receptacle/buffer plug and buffer plug/store receptacle assembly are completely separated during each cycle. The mating shall use a suitable blind-mate actuation mechanism such that the alignment pins of the connectors are exercised (see 3.9).

4.6.6 Altitude immersion. Qualifications only. Mated connectors shall be tested in accordance with test procedure EIA-364-03. The following details shall apply (see 3.10):

a. Service rating N shall apply to size 16 and size 20 contact locations only.
b. All wire ends shall be located within the chamber and exposed to the chamber atmosphere but not submerged or sealed.
c. At the end of the third cycle, while the connectors are still submerged in the solution, the insulation resistance at ambient temperature, shall be measured as specified in 4.6.7.1 and the dielectric withstanding voltage test shall be performed as specified in 4.6.8.1.
d. A suitable fixture shall apply the holding force specified in 3.4.7.2 to hold the connector pair together.

4.6.7 Insulation resistance.

4.6.7.1 Insulation resistance at ambient temperature. Unmated store receptacle and combined launcher receptacle/buffer plug connectors shall be tested as specified in test procedure EIA-364-21. The following details and exceptions shall apply (see 3.11.1):

a. For lot acceptance testing, where it is undesirable to install actual contacts in connectors, simulated contacts and special techniques may be used in performing this test.
b. The tolerance on the applied voltage shall be ± 10 percent.
c. Connectors shall be mated when testing after altitude immersion, humidity and altitude (low temperature).

4.6.7.2 Insulation resistance at elevated temperature. Unmated store receptacle and combined launcher receptacle/buffer plug connectors shall be tested as specified in test procedure EIA-364-21. The following details and exceptions shall apply (see 3.11.2):

a. The tolerance on the applied voltage shall be ±10 percent.
b. Test temperature of 175 +5°C, -0°C, for 30 minutes.
c. Measurements shall be made while the connectors are still in the chamber at the specified temperature.

4.6.8 Dielectric withstanding voltage. See 3.12.

4.6.8.1 Dielectric withstanding voltage at sea level. Not applicable for coaxial and triaxial contacts. Wired, unmated store receptacle and combined launcher receptacle/buffer plug connectors shall be tested in accordance with test procedure EIA-364-20. Connectors shall be mated when testing after altitude immersion, humidity, and altitude (low temperature). The following details and exceptions shall apply:

a. The magnitude of the test voltage shall be as specified in table XI.
b. Fifty percent of each contact size available shall be tested, but in no case shall less than six dielectric withstanding voltage readings be taken. If the number of contacts is three or less, all contacts shall be tested. The test voltage shall be applied between each wired contact, and each adjacent contact, and the shell.
c. The test voltage shall be maintained at the specified value for 2 seconds minimum.
d. For quality conformance, simulated contacts and special techniques may be used.

TABLE XI. Test voltages, ac rms, 55 ± 7 Hz.

Altitude	Service rating N	
	Mated	Unmated
Sea level	1,000	1,000
15,240 meters (50,000 feet)	600	400
21,336 meters (70,000 feet)	600	260
30,480 meters (100,000 feet)	600	200

4.6.8.2 Dielectric withstanding voltage at altitude. Mated connectors and unmated connector halves with pin contacts shall be tested in accordance with test procedure EIA-364-20. The following details and exceptions shall apply:

a. The magnitude of the test voltages shall be as specified in table XI.
b. Fifty percent of each contact size available shall be tested, but in no case shall less than six dielectric withstanding voltage readings be taken. If the number of contacts is three or less, all contacts shall be tested. The test voltage shall be applied between each wired contact and each adjacent contact and the shell.
c. The test voltage shall be maintained at the specified value for 2 seconds minimum.
d. The leads of all test circuits shall be brought out through the walls of the chamber. There shall be no wire splices inside the chamber. The wire ends of all leads shall be unsealed.
e. The chamber shall be evacuated to each of the specified altitude pressure equivalents as listed.

Altitude	Equivalent pressure
15,240 meters (50,000 feet)	87 torr
21,336 meters (70,000 feet)	33 torr
30,480 meters (100,000 feet)	8 torr

4.6.9 Insert retention. Unmated receptacles and buffer plugs shall be tested in accordance with test procedure EIA-364-35. The following details and exceptions shall apply (see 3.13):

a. Force to be applied is 532 N min (120 lbs).
b. Connectors may be wired.

4.6.10 Salt spray corrosion. The wired and combined launcher receptacle/buffer plug and store receptacle shall be mated and unmated 50 cycles at a rate of 300 cycles per hour maximum. The mating and unmating shall be accomplished so that the connector assemblies are completely separated during each cycle. The connectors shall then be subjected to the salt spray test in accordance with test procedure EIA-364-26. The following details and exceptions shall apply (see 3.14):

a. For connectors that have already been subjected to a mating/unmating test, the 50 mating/unmating cycles prior to salt spray are not required.
b. The pretest mating/unmating cycles shall use a suitable blind-mate actuation mechanism.
c. The MIL-DTL-83538/1 and /4 receptacle connectors shall be tested for 404 hours mated with protective caps (MIL-DTL-83538/7 and /8 respectively). They shall then be tested for a further 48 hours mated as a complete stack (including MIL-DTL-83538/3 and /11 buffer plugs where applicable). Finally, all connectors shall be tested for 48 hours unmated.
The MIL-DTL-83538/3 and /11 buffer plugs shall be tested for 96 hours (48 hours mated and 48 hours unmated).
d. The connectors shall not be mounted but shall be suspended from the top of the chamber using waxed twine or string, glass rods, or glass cord.
e. Wire ends must be protected to prevent salt migration.
f. A suitable fixture shall apply the holding force specified in 3.4.7.2 to hold the connector pair together.
g. The nickel plate on the signal components is to enhance the electrical performance needed on internal components. Degradation of the nickel plate on the OD surfaces of the signal set does not constitute a failure of this test.

4.6.11 Electrical engagement. The combined launcher receptacle/buffer plug and store receptacle shall be wired so it provides a complete series circuit through all contacts of the mated connector. A suitable power source and indicator shall be provided such that the earliest point at which the circuit is completed, during normal connector mating, can be established (see 3.15).

4.6.11.1 Electrical engagement-store receptacle to buffer plug. Connector halves shall be slowly mated by normal mating means until first indication of a completed circuit is observed. Means shall be provided to assure that electrical contact is made between the pin and the spring of the socket contact, rather than the hood of the socket contact. The mating operation shall be held at this point and the overall connector length shall be measured from solid reference points on the connector halves. The mating operation shall then be continued until the connector halves are in the completely mated position by applying the holding force specified in 3.4.7.2. A second overall length measurement shall then be taken from the same reference points. The difference of these two measurements shall be not less than that specified in 3.15. Both the outer shield and inner conductor circuits shall be included in the test of shielded contacts.

4.6.11.2 Electrical engagement-launcher receptacle to buffer plug. Connector halves shall be slowly mated by normal mating means until first indication of a completed circuit is observed. Means shall be provided to assure that electrical contact is made between the pin and the spring of the socket contact, rather than the hood of the socket contact. The mating operation shall be held at this point and the overall connector length shall be measured from solid reference points on the connector halves. The mating operation shall then be continued until the connector halves are in the completely mated position. A second overall length measurement shall then be taken from the same reference points. The difference of these two measurements shall be not less than that specified in 3.15. Both the outer shield and inner conductor circuits shall be included in the test of shielded contacts.

4.6.12 Gauge location. Applicable test gauges, conforming to figure 4 shall be installed in three randomly selected cavities in each connector. With each test gauge fully seated back against its contact retention device, the axial location of the front end of each gauge shall be measured relative to the reference point as specified in 3.1, as applicable (see 3.16).

4.6.13 Gauge retention. Applicable test gauges as specified on figure 5 shall be installed in three randomly selected cavities in each connector. The axial load specified in 4.6.14 shall be applied to individual test gauges in both directions. The load shall be applied at a rate of approximately 4.45 newtons (1 pound) per second until the specified load has been reached. Gauge displacement shall be measured with respect to the connector shell after an initial load of 8.9 Newtons (2 pounds) has been applied to assure that all slack has been taken up (see 3.17).

4.6.14 Contact retention. Unless otherwise specified, contacts shall be tested to procedures I and II (see 3.18).

4.6.14.1 Procedure I. The contact retention shall be tested as specified in test procedure EIA-364-29. The following details and exceptions shall apply:

a. Number of samples: The test shall be performed on one size 8 contact, one size 12 contact, two size 16 contacts and two size 20 contacts. Two size 16 and four size 20 contacts on the AIM-120 side of the buffer adapter shall be tested. The test shall be performed on both receptacles and in each direction on the buffers.
b. Applied axial load: Preload to 13.6 newtons maximum (3 lbs). Apply load as specified in table XII.
c. Special requirements: Where the test sequence required maintenance aging prior to contact retention, the contacts which were subjected to maintenance aging shall also be selected for contact retention.
d. Axial direction: The applicable forces shall be applied along the longitudinal axis of individual contacts in the direction tending to displace the contacts to the rear.
e. Only the contacts to be tested need be installed in the connector.

TABLE XII. Contact retention.

Contact	Load ±10 percent	
	Newtons	Pounds
20	67	15
16	111	25
12 coaxial	111	25
8 twinaxial	111	25

4.6.14.2 Procedure II. The contact retention shall be tested as specified in test procedure of EIA-364-29. The following details and exceptions shall apply:

a. Procedures: 4.6.14.1a through 4.6.14.1c apply.
b. Axial direction: Same as 4.6.14.1d, except the direction shall tend to displace the contacts to the front.
c. Only the contacts to be tested need be installed in the connector.

4.6.15 Altitude low temperature. Wired, mated, assembled connectors shall be subjected to the test specified in test procedure EIA-364-105. The following details shall apply (see 3.19):

a. No wire ends or splices inside the chamber.
b. Dielectric withstanding voltage test to be performed after return to ambient conditions shall be in accordance with 4.6.8.1.
c. Insulation resistance test to be performed at 30,480 meters (100,000 feet) at -65°C and shall be in accordance with 4.6.7.1.
d. A suitable fixture shall apply the holding force specified in 3.4.7.2 to hold the connector pair together.

4.6.16 Accessory thread strength. Applicable to launcher receptacle only, see 3.20. The launcher receptacle shall be fitted into a device that will hold it in place. The torque wrench shall be applied to the adapter thread of the launcher receptacle at a rate of approximately 5 Newton-meter per second (3.7 pound feet per second) until the torque required is achieved (see figure 7). The applied load shall be held for 1 minute, then the load shall be released. The test shall then be repeated on the accessory end of the launcher receptacle accessory adapter using the torque values from MIL-DTL-83538/9.

4.6.17 Vibration. Qualifications only, see 3.21. Wired and mated connectors shall be subjected to the applicable test(s) specified. All contacts shall carry a test current of 100 milliamperes maximum and shall be continuously monitored for discontinuities throughout the test. A detector capable of detecting any discontinuities in excess of 1 microsecond shall be used. A suitable fixture shall apply a holding force not to exceed 271 Newtons (61 pounds) to hold the connector pair together (see figure 14).

The vibration level shall be monitored and recorded for the duration of the testing. It shall be monitored and recorded from at least two different points. One of the measuring sensor shall be installed at the base of the vibration plate and the other very close to the store receptacle. The measuring point adjacent to the store receptacle shall be used for vibration control.

The applied holding force of 271 Newtons (61pounds), initially set before the vibration test, shall be monitored and recorded before and after the test only to assure compliance to the 61 lbs max requirement.

In order that all the data can be captured the above parameters shall be measured at a suitable rate throughout the testing. The sampling rate should be not less than 1 measurement per minute.
The test report shall advise the sampling rate used for each parameter, and the values obtained.

The wire bundle shall be clamped to fixed points at least 203.2 millimeters (8 inches) from the rear of the connector.

Assembly and setup of figure 14 fixture shall be as follows:

The loading force should be applied using the following method:

1. Loosen the screws on the fixture slide to allow free movement.
2. Fit the clamp between the base of the fixture and the fixture slide using a suitable screw. The thread of the screw should be of a fine pitch to enable accurate adjustment and should match the thread in the base of the fixture slide.
3. Apply the load force to the spigots of the M83538/4 connector and clamp the loading device such that the load is maintained. (It is recommended that a load cell or similar is used to apply the load to the spigots. Devices relying on spring compression such as spring balances shall not be used).
4. Tighten the screw between the clamp and fixture slide thus allowing the application of the force to be transferred to the fixture arms until the force reading at the spigots reads no less than 454 grams (1 lb).
5. Tighten the screws on the fixture slide to fix the position.
6. Remove the clamp and screw prior to vibration testing.
7. Steps 1 to 6 should be repeated prior to vibration in each axis.

4.6.17.1 Random vibration. Connectors shall be subjected to the test specified in method 514 of MIL-STD-810 (see figure 9). The following details shall apply:

a. Procedure I: Using the vibration test spectrum of MIL-STD-810, with W_0 functional = 0.20 G^2/Hz, and W_0 Endurance = 0.83 G^2/Hz.
b. Vibration to be conducted at ambient temperature.
c. 0.04 G^2/Hz to 31 Hz (89 Hz for functional test).
d. 4 dB/oct. increase to W_0 at 300 Hz.
e. W_0 from 300 Hz to 1000 Hz.
f. 6 dB/oct. decrease down to 2000 Hz.
g. The connectors shall be assembled utilizing a straight EMC backshell in accordance with SAE-AS85049/19 or equivalent, attached to the launcher receptacle.

The duration shall be 30 minutes functional, 1 hour endurance, 30 minutes functional applied in each of the 3 major axis.

4.6.17.2 Random vibration. Alternative procedure. Procedure 2: A lower endurance test level may be used increasing the test time according to the following formula:

$$W_{of} / W_{oe} = (T_e / T_f)^{0.25}$$

T_f = time in high dynamic environment (300 h)
T_e = endurance test time (hours)
W_{of} = functional test level (g^2/Hz)
W_{oe} = endurance test level (g^2/Hz)

For example, if endurance test level is W_{oe}=0.64 g^2/Hz, then the test time should be set to Te=2 hours and 52 minutes. The level and time periods for the functional vibration shall be as in 4.6.17.1. The vibration level of 0.64 g^2/Hz is the lowest acceptable level to be applied.

This procedure applies to the following assemblies:

1) The first 2 assemblies shall comprise:
   a. A clamp JN1092HS23 or a suitable straight clamp in accordance with SAE-AS85049.
   b. An adapter in accordance with MIL-DTL-83538/9, style C.
   c. A launcher receptacle in accordance with MIL-DTL-83538/4, style B.
   d. A hybrid buffer plug in accordance with MIL-DTL-83538/11.
   e. A store receptacle in accordance with 4.4.2a.

2) The second 2 assemblies shall comprise:
   a. A clamp JN1092HS23 or a suitable straight clamp in accordance with SAE-AS85049.
   b. An adapter in accordance with MIL-DTL-83538/9, style C.
   c. A launcher receptacle in accordance with MIL-DTL-83538/4, style A or style B.
   d. A buffer plug in accordance with MIL-DTL-83538/3.
   e. A store receptacle in accordance with MIL-DTL-83538/1

The frequency specified in 4.6.17.1c will vary depending on the value of W_o selected.

4.6.17.3 Gunfire vibration. Wired and mated connector assemblies shall be subjected to a functional test in accordance with MIL-STD-810, method 519.5, except that T_1 shall be at 20 Hz and 2 kHz instead of 30Hz and 2KHz, at the levels defined in table XIII, which are applied for 26.5 minutes in each of the 3 axis.

TABLE XIII. Gunfire vibration.

T_1 (g^2/Hz) = 0.037	
T_2 (g^2/Hz) = 0.765	
T_3 (g^2/Hz) = 2.518	
Overall gms = 37.18	
F_1 (Hz) = 28.3	
F_2 (Hz) = 56.6	
F_3 (Hz) = 84.9	
F_4 (Hz) = 113.2	
P_1 (g^2/Hz) = 2.312	
P_2 (g^2/Hz) = 2.440	
P_3 (g^2/Hz) = 2.784	
P_4 (g^2/Hz) = 3.833	

4.6.18 Shock. Wired and mated connectors shall be subjected to the applicable test specified. Connectors shall be monitored for any discontinuities. A detector capable of detecting all discontinuities in excess of 1 microsecond shall be used. A suitable fixture, approved by the qualifying activity, shall apply the holding force specified in 3.4.7.2 to hold the connector pair together (see figure 14 and 3.22).

4.6.18.1 Standard shock. Connectors shall be subjected to the test specified in test procedure EIA-364-27. The following details shall apply:

a. The pulse shall be an approximate half sine wave of 300 g's ±15 percent magnitude with a duration of 3 ±1 milliseconds.
b. The wire bundle shall be clamped to fixed points at least 203.2 mm (8 inches) from the rear of the connector.

4.6.19 Shell to shell conductivity. Mated connectors shall be subjected to the test specified in test procedure EIA-364-83. A suitable fixture shall apply the holding force specified in 3.4.7.2 to hold the connector pair together (see 3.23).

4.6.20 Humidity. Wired, mated connectors shall be subjected to the humidity test specified in test procedure EIA-364-31. The following details and exceptions shall apply (see 3.24):

a. Test condition, method IV.
b. The mated connectors shall be mounted in a vertical position.
c. Step 7a shall be performed during the last 5 cycles.
d. Three hours minimum after the start of step 7a during the final cycle and while the connectors are still subjected to high humidity, the insulation resistance shall be measured when the chamber temperature reaches +20°C, - 5°C and condensation is observed on the connector.
e. For qualification testing, insulation resistance readings shall be made on a minimum of 50 percent of the circuits. Outer circuits shall be measured to the connector shell.
f. A suitable fixture shall apply the holding force specified in 3.4.7.2 to hold the connector pair together.

4.6.21 Shell spring finger forces. Plugs shall be completely mated and unmated 10 times with counterpart receptacles less coupling pins (if applicable) and inserts. On the mating of the first cycle, the forces necessary to engage the connectors shall be within the values specified in 3.25. On the unmating of the last cycle, the forces necessary to separate the connectors shall be within the values specified in 3.25.

4.6.22 EMI shielding. Not applicable to the MIL-DTL-83538/11 buffer plug (see 3.26).

4.6.22.1 EMI shielding (from 100 Hz to 1 GHz only). The EMI shielding effectiveness of mated connectors with EMI backshells (backshells may be soldered to the connector) shall be measured in a triaxial radio frequency leakage fixture as specified on figure 10. The EMI leakage from the conductor inside the connector in the same inner coaxial line into the outer coaxial line shall be measured at the frequencies specified in table III within a frequency accuracy of ±5 percent. The level of detected signal power shall be indicated by a tunable radio frequency field intensity meter isolated from the test circuit by a 3 to 10 dB pad. Care shall be taken to ensure that the signal is a result of EMI leakage from within the mated connector and not due to a faulty termination inside the fixture. All terminations inside the fixture, whether to the EMI backshells or between internal conductors, shall have a leakage at least 10 dB less than the test requirements.

The signal source shall be set to the desired frequency. The signal shall be fed through a 3 to 10 dB isolation pad to a parallel circuit consisting of a coaxial switch (DPDT) so connected that the signal can be manually or electronically fed alternately to the fixture and to a variable 100 dB reference attenuator. The attenuator shall be adjustable in 1 dB steps and calibrated to ± 3 dB.

a. The inserts may be removed from the connectors under test or the contacts removed and a hole drilled through the inserts to accommodate a center conductor of suitable geometry to provide a good 50 ohms impedance match with the inside diameter of the mated connector shells and EMI backshells. Tapered transition may be used to provide a means of changing diameters without introducing significant discontinuities in the line. The maximum VSWR in the inner coaxial line shall be 1.5. The outer shell of the test fixture shall be so constructed as to provide a good 50 ohms impedance match with the outside diameter of the mated connector shells, coupling ring, and EMI backshells. The maximum VSWR of the outer coaxial line shall be 1.5.

b. A sliding circumferential short shall be positioned behind the connector on the signal input end of the fixture to provide for tuning the outer coaxial line for maximum output at each test frequency. The allowable travel of this short shall be greater than one-half wave length at the lowest test frequency of 1.5 meters minimum for 100 MHz. The inner coaxial line shall be terminated in a fixed 50-ohm load impedance behind the connector at the output end of the fixture.

c. The connectors used to couple together the various elements of the test system shall be of a low-leakage type which have a nominal impedance of 50 ohms, a VSWR of less than 1.5, and a minimum leakage attenuation of 100 dB. The output impedance of the signal source and the input impedance of the detector shall be nominally 50 ohm with a maximum VSWR of 1.5. The input and output VSWR of the standard attenuator shall be less than 1.5 in the 20 to 100 dB range.

d. The relative signal level in the variable attenuator shall be equaled to the signal level through the leakage fixture by adjusting the attenuator. The signal loss in the fixture can then be read from the setting on the variable attenuator.

e. A suitable fixture shall apply the holding force specified in 3.4.7.2 to hold the connector pair together.

4.6.22.2 EMI shielding (from 1 GHz to 10 GHz). The EMI shielding effectiveness of mated connectors with EMI backshells shall be measured using the mode-stirred technique specified in test procedure EIA-364-66.

4.6.23 Insertion loss. Not applicable to the MIL-DTL-83538/11 buffer plug (see 3.27).

4.6.23.1 Contact resistance. Connectors shall be tested in accordance with the contact resistance test method of SAE-AS39029. The following details and exceptions shall apply:

a. The test shall be conducted on the wired and mated set of launcher receptacle, buffer plug (not MIL-DTL-83538/11) and store receptacle.
b. The total measured maximum resistance through the combined mated sets of launcher receptacle with buffer plug and store receptacle with buffer plug shall be 3 times the limits of SAE-AS39029 for the applicable size contacts.
c. A suitable fixture shall apply the holding force specified in 3.4.7.2 to hold the connector pair together.

4.6.23.2 RF insertion loss. A wired and mated set of launcher receptacle, buffer plug (not MIL-DTL-83538/11) and store receptacle shall be individually tested as shown on figure 11. Insertion loss of a mated connector set is defined as the increase of a loss due to insertion of mated connectors in a cable; this includes the reflection losses to the cable and the dissipating losses in the pair.

First insert cable assembly number 1 and tune out its input VSWR by means of tuner number 4 and balance setup. Then insert the cable assembly number 2 which includes the connector set under test. With tuner number 4 in the same position and the electrical length of the cable assembly the same as that of number 1, record increase of insertion loss; add to this as a correction, the cable loss of the removed section due to the length $\Delta L1 + \Delta L2$ at this frequency. The sum of the increase and the correction is the insertion loss of the connector set. This shall be repeated for the other mated sets.

The following details shall apply:

a. The high bandwidth 1 contact shall be terminated to RG316 cable.
b. The high bandwidth 1 contact (SAE-AS39029/103) shall be tested from 20 Hz to 2.0 GHz with a 50-ohm reference load.
c. For frequencies from 500 MHz to 2.0 GHz, the measured insertion loss shall not exceed 0.11 dB x $\sqrt{F}$, where F is the test frequency in GHz. For frequencies below 500 MHz, the insertion loss shall not exceed 0.12 dB.
d. For frequencies from 20 Hz to 20 MHz, the insertion loss shall not exceed 0.20 dB.
e. A suitable fixture shall apply the holding force specified in 3.4.7.2 to hold the connector pair together.

4.6.24 Voltage standing wave ratio. Not applicable to the MIL-DTL-83538/11 buffer plug (see 3.28). Wired, mated connectors shall be subjected to the following VSWR tests:

a. Conduct the test on a mated set of launcher receptacle, buffer plug, and store receptacle units.
b. High bandwidth 1 contacts shall be tested with RG316 cable and a 50-ohm reference load.
c. After performing a 50-ohm ±1, 1-port calibration of the vector network analyzer, set up the test configuration on figure 12 for the connector set under test. Set the network analyzer starting frequency at 50 MHz maximum and the stopping frequency at 2.0 GHz minimum.
d. Display the linear magnitude of the low pass impulse reflection response (time domain) on figure 12 test setup (inverse fourier transform of the frequency domain data).
e. Gate out all reflection contributors beyond adapter 1 (see figure 12).
f. Fourier transform the gated impulse reflection response back into the frequency domain and verify that adapter 1 VSWR is less than 1.20 over the frequency range selected in step "c".
g. Return the network analyzer to the low pass impulse response (time domain) mode and remove the gate of step "e".
h. Remove all residual reflection contributors by centering (±1 nanosecond) a new gate at the midpoint between the mated connector set. Set this new gate width to a value higher than 20.0 nanoseconds.
i. Fourier transform the gated impulse reflection response back into the frequency domain.
j. Verify that the displayed resulting transformed return loss (or equivalent reflection coefficient) complies with the VSWR limits specified in 3.28.
k. A suitable fixture shall apply the holding force specified in 3.4.7.2 to hold the connector pair together.

4.6.25 Ozone. Wired, mated connectors shall be subjected to the test specified in test procedure EIA-364-14. A suitable fixture shall apply the holding force specified in 3.4.7.2 to hold the connector pair together (see 3.29).

4.6.26 Fluid immersion. Connector samples shall be subjected to the test specified in test procedure EIA-364-10 (one sample per fluid as referenced in table X). Following the fluid immersion cycles, the connectors shall be tested for coupling force/torque as specified in 4.6.4, decoupling rate as specified in 4.6.4.3 and dielectric withstanding voltage at sea level as specified in 4.6.8.1 within 3 hours (see 3.30).

4.6.27 Retention system fluid immersion. Unmated connectors with contacts removed shall be immersed in the fluids listed in table X (one sample per fluid) for 2 hours at room temperature. After removal, excess fluid shall be drained from the connectors for 4 hours and the contacts reinstalled. Following the test, the connectors shall be subjected to contact retention as specified in 4.6.14 (see 3.30.1).

4.6.28 Contact walkout. Two contacts in each receptacle shall be tested. The contacts shall be crimped to stranded steel cable of an appropriate size and installed in the connector. The unmated connector shall be mounted in a test fixture as shown on figure 13. A 13.6 Newton-load (3 pounds) shall be applied to the cable. One 360° rotation of the fixture with the connector mounted shall constitute one cycle. The connector shall be subjected to 100 cycles at a rate of 10 to 20 cycles per minute (see 3.31).

4.6.29 Installing and removal tool abuse. Qualifications only. One 8 gauge, one 12 gauge, one 16 gauge, and two 20 gauge contact cavities in each connector shall be subjected to each of the following test. Different contact cavities shall be used for each test. Should a tool become damaged during any of the testing, it shall be replaced. Failure of a tool shall not constitute a test failure. Tools shall be used in accordance with MIL-I-81969/14 (see 3.32).

4.6.29.1 Removal tool rotation. The tool shall be inserted as if to remove a contact and a total of 13.6 Newtons (3 pounds) axial load shall be applied. With the force applied, the tool shall be rotated 180° and then removed also removing the contact. The contact shall be reinserted. The steps shall be repeated three times on each of the contacts selected.

4.6.30 High temperature exposure. See 3.33.

4.6.30.1 High temperature exposure with contact loading. Connectors with removable contacts shall have one mating pair of 16 gauge contacts removed from an untested contact cavity and replaced with contacts crimped or otherwise attached to steel cable or steel cored copper wire (copperweld, or equivalent) of an appropriate size. The axial location of these contacts shall be measured for conformance to the applicable dimensions of 3.1, with a load of approximately 8.9 Newtons (2 pounds) applied to seat the contact back against the retention device. The connector shall then be mounted in a fixture equivalent to that shown on figure 6. A weight equal to 50 percent of the axial load specified in table XII for the applicable contact size shall be suspended freely from each steel wire. A current of 100 milliamperes maximum shall be applied to the test contacts and a suitable instrument shall be used to monitor the circuit for discontinuities in excess of 1 microsecond. The mounted connector shall then be exposed to 175°C for 1,000 hours minimum. After the connectors return to ambient temperature, they shall be unmated and the contact locations remeasured with approximately 8.9 Newtons (2 pounds) axial load applied to seat the contact back against the retention device. A suitable fixture shall apply the holding force as specified in 3.4.7.2 to hold the connector pair together (see 3.33.1).

4.6.30.2 High temperature exposure for connectors. Mated connectors shall be subjected to an ambient temperature of 175°C +3°C, -0°C. The temperature shall be maintained for 1,000 hours. A suitable fixture shall apply the holding force as specified in 3.4.7.2 to hold the connector pair together (see 3.33.2).

4.6.31 Electrolytic erosion. Not applicable to the MIL-DTL-83538/11 buffer plug (see 3.34). The launcher receptacle with buffer plug (not MIL-DTL-83538/11) mated shall be mounted in a vertical position, pins facing up. A saltwater solution (5 percent salt by weight) shall be poured onto the pin interface until the solution level just reaches the pin tips. The solution shall remain in the connector for a minimum of 30 seconds and then poured out, lightly shaking excesses from the connector. The store receptacle shall immediately be mated to the buffer plug with an applied holding force as specified in 3.4.7.2. One cell pattern, with all contacts adjacent to a central contact at a positive polarity and the center contact at a negative polarity, shall be set up at a location giving the most uniform distribution of contacts adjacent to the center contact. A potential of 60 volts dc shall be applied between the contacts adjacent to the center contact. The contacts shall be energized for 40 hours. Following this, with the voltage disconnected, the connectors shall be unmated and the pin contacts shall be examined using 3X magnification for erosion to base metal.

4.6.32 Ice and freezing rain. See 3.35.

4.6.32.1 Severe ice test. The unmated wired connectors with accessories attached, shall be temperature stabilized at +5°C (41°F). The store receptacle connector shall be filled with a salt water solution (2.5% salt by weight) and then the water shall be emptied out by inverting the connector assembly. Immediately after, within 30 seconds, the connector shall be mated with its launcher counterpart. A suitable fixture shall apply a holding force as specified in 3.4.7.2 to hold the connector pair together. The chamber temperature shall be reduced to -54.0°C (-65.2°F) at a rate not less than 5°C/minute. The chamber temperature shall be increased at a rate of 5°C/minute until the chamber temperature reaches 0°C. The test specimen shall be held at this temperature for 5 minutes. Upon completion of the soak period, the test specimen shall be removed from the chamber and immediately (within 30 seconds) subjected to unmating as provided in its user application. The force required to separate the connector shall not exceed 334 Newtons (75 pounds).

4.6.32.2 Ice resistance test. Wired, mated connectors with an applied holding force of 271 Newtons maximum, and with accessories attached shall be placed in a chamber and the temperature reduced and stabilized such that the item is maintained at -54.0°C (-65.2°F) for 1 hour. After stabilization of the chamber temperature, the test specimen shall be sprayed with water precooled to 1.7°C (35°F) for a period of 5 minutes. The test specimen shall be located at a maximum 305 mm (12 inches) from the spray nozzle. The entire test specimen shall remain in the chamber at -54.0°C (-65.2°F) for an additional 30 minutes. Upon completion of the 30 minute cold soak period, the test specimen shall be removed from the chamber and immediately (within 2 minutes) subjected to unmating as provided in its user application. The force required to separate the connector shall not exceed 334 Newtons (75 pounds). A suitable fixture shall apply a holding force as specified in 3.4.7.2 to hold the connector pair together.

4.6.33 Sand and dust. Wired, mated connectors shall be subjected to the blowing dust and blowing sand tests of MIL-STD-810, method 510. Blowing dust air velocity shall be 8.9 meters/second minimum. The blowing sand air velocity shall be 29 meters/second minimum with a sand concentration of 2.2 ± 0.5 grams/cubic meter. Immediately following this exposure, the decoupling force and coupling force shall be measured and shall not exceed the requirements specified in 3.8 by more than 25 percent. A suitable fixture shall apply the holding force specified in 3.4.7.2 to hold the connector pair together (see 3.36).

4.6.34 Magnetic permeability. Connectors shall be tested as specified in test procedure EIA-364-54 (see 3.3.6).

4.6.35 Post test examination. The tested connectors and contacts shall be examined for compliance with 3.42 and 3.46 to determine the effects of previous testing. Any evidence of cracking, loosening of parts, carbon tracking, excess wear, or missing parts shall be recorded.

4.6.36 Launcher drive pin strength. Applies to MIL-DTL-83538/4 launcher receptacle only. The Launcher receptacles shall be mounted in a fixture along the “Z” axis as shown on figure 3. A static force of 2000 Newtons (450 pounds) shall be applied to the rear of the connector. Connectors shall meet the requirements of 3.37 after the test.

4.6.37 Maximum Holding force. A mated set of launcher receptacle, buffer plugs and store receptacles shall be placed in an appropriate holding device. A holding force of 578 Newtons (130 pounds) shall be applied to the set. The requirement of 3.8.5 shall be met.

4.6.38 Lightening strike. The connector set shall be subjected to the lightening strike test requirements as specified in 4.6.38.1 and 4.6.38.2 (see 3.38).

4.6.38.1 Lightning strike - current pulse test. The current pulse will be a slow pulse Waveform (see figure 15), to simulate the effect of an indirect lightning signal arising from the voltage differences across the airframe. A typical test arrangement is shown on figure 17. The power generator used shall be capable of producing the current waveform show on figure 16. The test shall be carried out on two mated connector sets, one for each buffer adapter type. Connectors must be tested as a complete connector set, ie. Launcher receptacle, buffer plug, and store receptacle. The connector set shall be fully coupled and held together using a non-conductive fixture. The launcher receptacle is to be assembled with a SAE-AS85049/19 backshell to ensure that the test current is injected into the shell via its rear accessory thread. A cable bundle with a large cross-sectional area of screen must be used to ensure that it will carry the test currents. The non- conductive fixture and cable bundle shall be approved by the qualifying activity. The full amplitude signal (see figure 15) at 10 kA amplitude shall be a total of 5 times in the positive and negative directions of current flow.

4.6.38.2 Lightning strike - voltage pulse test. A typical test method is shown on figure 17. The power generator used shall be capable of producing the voltage waveform shown on figure 18. The test performed shall be between contacts, and between contacts and shell, for a mated connector set. For the contact to contact test, only the two adjacent contacts closest together are to be tested, and for the contact to shell test, only the contact closest to the shell is tested. If there is no difference in the contact spacing, any contact is acceptable. The full amplitude signal is to be applied 5 times for each contact to contact, and each contact to shell test.

4.6.39 Electrical resistance. Wired and mated connectors shall be subjected to the requirements of test procedure EIA 364-06. The applied dc current shall be 100mA, and the maximum voltage of the current source shall be 2 volts. All paths through the connector shall be measured and recorded (see 3.39.1).

4.6.40 Applied high current. Qualifications only. Applicable to the MIL-DTL-83538/11 buffer plug only (see 3.39.2). The applied high current test shall be conducted as follows: Test 10 size 16 contacts only. The test current and duration shall be 20 amps for 1 minute respectively. The contacts should be tested individually. The temperature shall be at ambient. The ratio of the resistance level (see 4.6.39) from before to after the test shall be not less than 95% computed as follows:

$$(\text{Resistance before the test}) / (\text{Resistance after the test}) \times 100\% \geq 95\%.$$

A full connector stack shall be used in the test and a tested contact should be allowed to cool down before a new contact is tested.

4.6.41 Biological and chemical certification. A connector manufacturer shall submit a list of non-metallic materials used in his connector to be qualified, to a certifying organization acceptable to the DSCC qualification activity for certification. The certification shall state that the non-metallic materials used in the connector meet the requirements of 3.3.7. If a material is unknown to the certifying organization, then a test sample shall be submitted to the certifying organization for testing and certification. The sample's mechanical properties for the purposes of testing shall be decided by the certifying organization.

5. PACKAGING

5.1 Packaging. For acquisition purposes, the packaging requirements shall be as specified in the contract or order (6.2). When packaging of materiel is to be performed by DoD or in-house contractor personnel, these personnel need to contact the responsible packaging activity to ascertain packaging requirements. Packaging requirements are maintained by the Inventory Control Point's packaging activities within the Military Service or Defense Agency, or within the military service system commands. Packaging data retrieval is available from the managing Military Department's or Defense Agency's automated packaging files, CD-ROM products, or by contacting the responsible packaging activity.

6. NOTES

(This section contains information of a general or explanatory nature that may be helpful, but is not mandatory.)

6.1 Intended use. This connector is designated the MIL-STD-1760, type II connector. This connector assembly will be used to provide the transfer of MIL-STD-1760 interface class I electrical signals and power between an aircraft (or ground vehicle) mounted launcher and an associated store. This connector is intended to be used on rail and eject launchers where engagement/disengagement of the launcher receptacle (with attached buffer plug) to the store receptacle will be via a blindmate mechanical mechanism. The signal and power transfer may occur at various phases of all store operations from store upload through store launch. In addition, the connectors may be used with suitable test equipment for various tests of the store and aircraft in the factory-to-upload sequence. This connector is military unique because it is intended to be used on rail and eject launchers where engagement/disengagement of the launcher receptacle (with attached buffer plug) to the store receptacle will be via a blindmate mechanical mechanism; whereas no known commercially equivalent substitute is available.

6.2 Acquisition requirements. Acquisition documents should specify the following:

a. Title, number, and date of the specification.
b. Packaging requirements (see 5.1).
c. PIN (see 1.1.1).
d. Whether contacts, sealing plugs, and tools are included (see 3.4.2, 3.4.2.2, and 3.4.4.2).

6.3 Qualification. With respect to products requiring qualification, awards will be made only for products which are, at the time of award of contract, qualified for inclusion in Qualified Products List QPL No. 83538 whether or not such products have actually been so listed by that date. The attention of the contractors is called to these requirements, and manufacturers are urged to arrange to have products that they propose to offer to the Federal Government tested for qualification in order that they may be eligible to be awarded contracts or orders for the products covered by this specification. Information pertaining to qualification of products may be obtained from Defense Supply Center Columbus, DSCC-VQ, P.O. Box 3990, Columbus, Ohio 43213-3990.

6.3.1 Copies of "Provisions Governing Qualification SD-6". Copies of "Provisions Governing Qualification SD6" may be obtained upon application to Commanding Officer, Naval Publications and Forms Center, 5801 Tabor Avenue, Philadelphia, PA 19120.

6.4 Definitions.

6.4.1 Blindmate. A situation in which personnel wishing to mate a connector can neither see nor touch the connector halves being mated and must rely on some mechanism to accomplish the mating.

6.4.2 Scoopproof. Scoopproof means that because of the connector long shell design, it is impossible for the mating plug connector to inadvertently be cocked into the mating receptacle and damage the pins or electrically short the contacts.

6.5 Applicable contacts.

SAE-AS39029			
	Power	Coaxial	Twinaxial
Socket	/56	/75, /103	/91

6.6 Subject term (key word) listing.

Blind mating
Buffer plug
Launcher receptacle
Store receptacle

6.7 Environmentally preferable material. Environmentally preferable materials should be used to the maximum extent possible to meet the requirements of this specification. Table XIV lists the Environmental Protection Agency (EPA) top seventeen hazardous materials targeted for major usage reduction. Use of these materials should be minimized or eliminated unless needed to meet the requirements specified herein (see section 3).

TABLE XIV. EPA top seventeen hazardous materials.

Benzene	Dichloromethane	Tetrachloroethylene
Cadmium and Compounds	Lead and Compounds	Toluene
Carbon Tetrachloride	Mercury and Compounds	1,1,1 - Trichoroethane
Chloroform	Methyl Ethyl Ketone	Trichloroethylene
Chromium and Compounds	Methyl Isobutyl Ketone	Xylenes
Cyanide and Compounds	Nickel and Compounds	

6.8 Guidance on use of alternative parts with less hazardous or nonhazardous materials. This specification provides for a number of alternative plating materials via the PIN. Users should select the PIN with the least hazardous material that meets the form, fit and function requirements of their application.

6.9 Military unique statement. This connector is military unique because it is an environment resisting circular connector specifically designed for MIL-STD-1760 applications. It is capable of operating in high shock, high vibration and high temperature environments as well as meeting the salt spray corrosion requirements of this specification. As a three piece rail launch connector set, it has no commercial applications and is exclusively used to launch various missiles from various jet fighters.

6.10 Changes from previous issue. Marginal notations are not used in this revision to identify changes with respect to the previous issue due to the extent of the changes.

6.11 Tin whisker growth. The use of alloys with tin content greater than 97 percent, by mass, may exhibit tin whisker growth problems after manufacture. Tin whiskers may occur anytime from a day to years after manufacture and can develop under typical operating conditions, on products that use such materials. Conformal coatings applied over top of a whisker-prone surface will not prevent the formation of tin whiskers. Alloys of 3 percent lead, by mass, have shown to inhibit the growth of tin whiskers. For additional information on this matter, refer to ASTM-B545 (Standard Specification for Electrodeposited Coatings of Tin) (see 3.43).

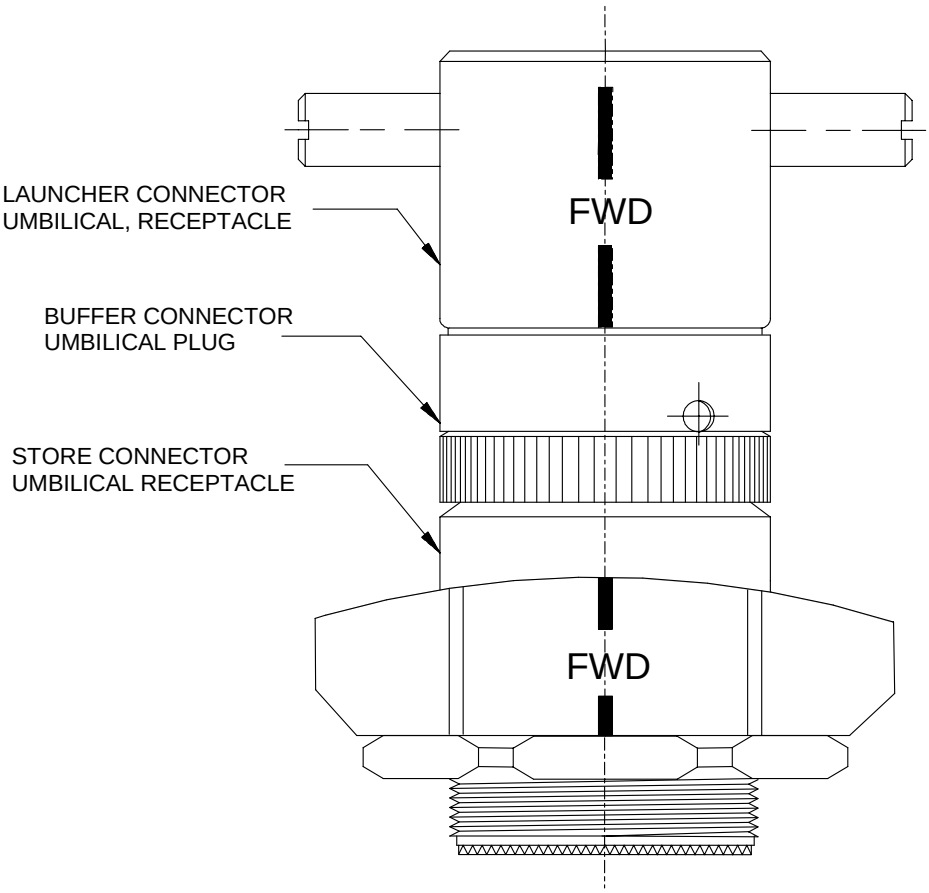

FIGURE 1. Electrical umbilical assembly.

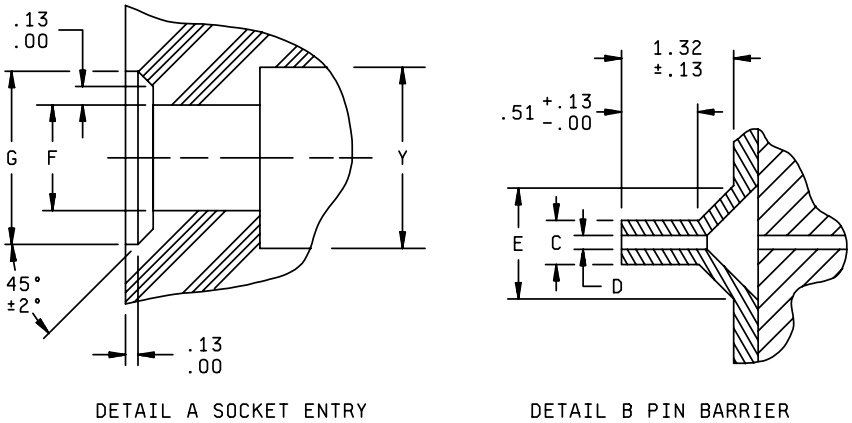

mm	Inches
0.00	0.00
0.13	0.005
0.51	0.020
1.32	0.052

Contact size	Detail A			Detail B		
	F dia	G dia	Y dia	E dia	C dia	D dia max
20	1.32 (.052) 1.24 (.049)	2.26 (.089) 2.16 (.085)	2.184 (.0860) 2.108 (.0830)	2.44 (.096) 2.31 (.091)	1.91 (.075) 1.83 (.072)	0.97 (.038)
16	1.88 (.074) 1.80 (.071)	2.84 (.112) 2.74 (.108)	3.073 (.1210) 2.997 (.1180)	3.02 (.119) 2.90 (.114)	2.49 (.098) 2.41 (.095)	1.52 (.060)
12	2.69 (.106) 2.62 (.103)	3.66 (.144) 3.56 (.140)	4.293 (.1690) 4.216 (.1660)	3.84 (.151) 3.71 (.146)	3.30 (.130) 3.23 (.127)	2.34 (.092)
8	5.84 (.230) 5.77 (.227)	6.81 (.268) 6.71 (.264)	7.442 (.2930) 4.366 (.2900)	7.06 (.278) 6.93 (.273)	6.50 (.256) 6.38 (.251)	5.49 (.216)

NOTES:
1. Dimensions are in millimeters.
2. Inch equivalents are given for information only.

FIGURE 2. Interface design.

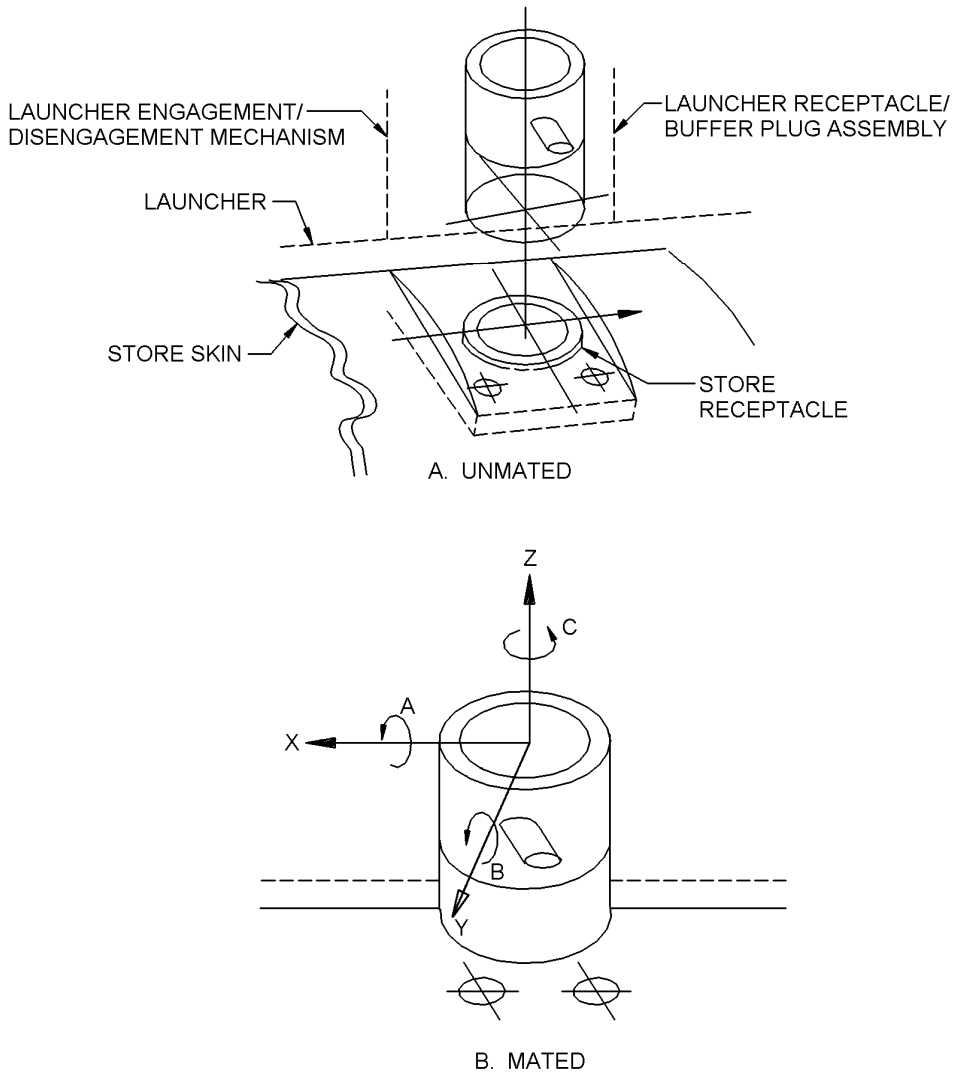

FIGURE 3. Axis and angle definitions.

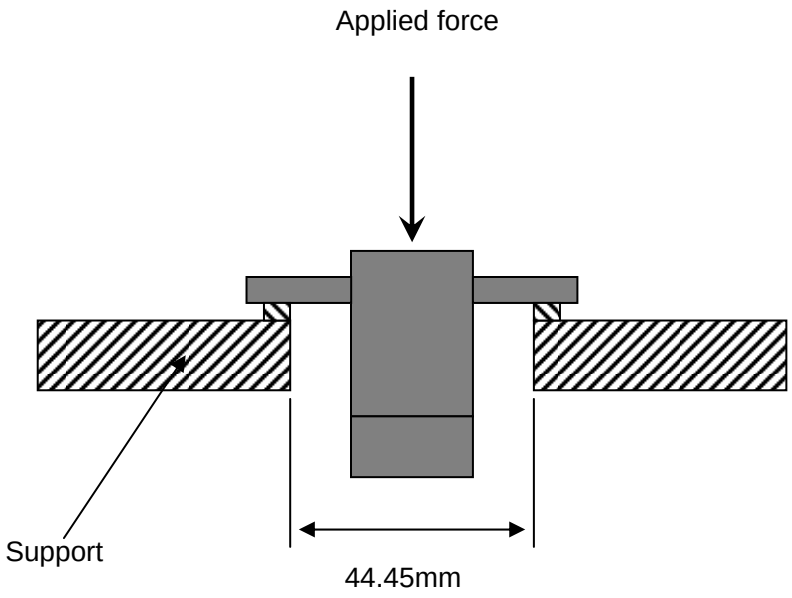

Launcher drive pin strength test

mm	Inches
44.45	1.750

NOTES:
1. Dimensions are in millimeters.
2. Inch equivalents are given for information only.

FIGURE 3. Axis and angle definitions - Continued.

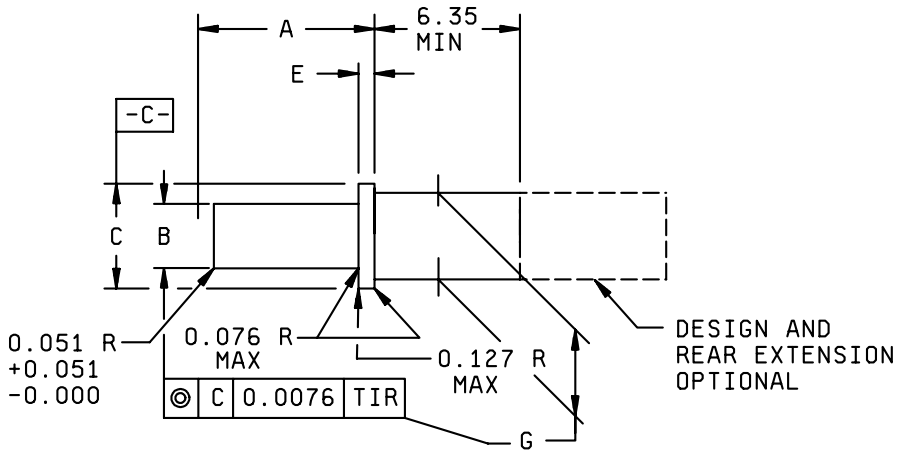

mm	Inches	mm	Inches
0.000	0.0000	0.127	0.005
0.076	0.00030	6.35	0.250
0.051	0.0020		

Contact size	A +0.0127 (.00050) -0.0000 (.00000)	B dia +0.0051 (.00020) -0.0000 (.00000)	C dia +0.0051 (.00020) -0.0000 (.00000)	E +0.0000 (.00000) -0.0051 (.00020)	G dia +0.0000 (.00000) -0.0051 (.00020)
20	14.86 (.585)	1.955 (.0770)	2.311 (.0910)	0.838 (.0330)	1.788 (.0704)
16	14.86 (.585)	2.845 (.1120)	3.226 (.1270)	0.838 (.0330)	2.616 (.1030)
12	14.86 (.585)	4.064 (.1600)	4.547 (.1790)	0.838 (.0330)	3.835 (.1510)
8	14.986 (.590)	7.290 (.2870)	7.899 (.3110)	0.838 (.0330)	7.010 (.2760)

NOTES:
1. Dimensions are in millimeters.
2. Inch equivalents are given for information only.
3. Material: Hardened tool steel.
4. Finish: 32 microinches polished.
5. Use store receptacle and launcher receptacle MIL-DTL-83538/1 and MIL-DTL-83538/4.

FIGURE 4. Test gauge, socket, and location.

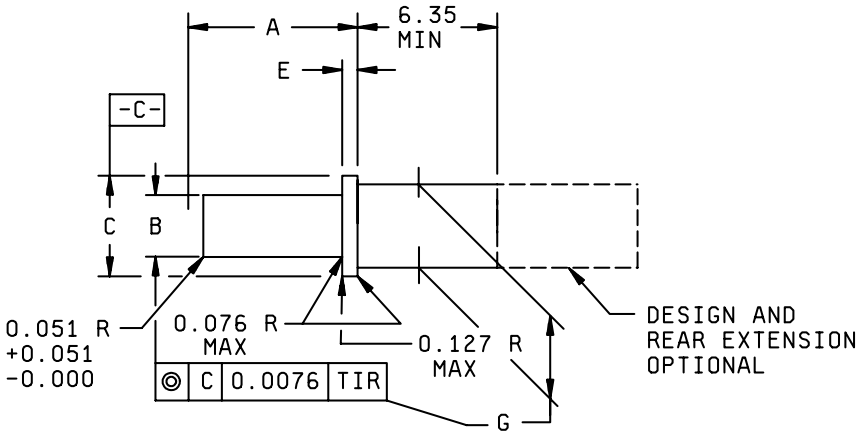

mm	Inches	mm	Inches
0.000	0.0000	0.127	0.005
0.051	0.0020	6.35	0.250
0.076	0.0030		

Contact size	A +0.0127 (.00050) -0.0000 (.00000)	B dia +0.0051 (.00020) -0.0000 (.00000)	C dia +0.0051 (.00020) -0.0000 (.00000)	E +0.0000 (.00000) -0.0051 (.00020)	G dia +0.0000 (.00000) -0.0051 (.00020)
20	15.90 (.626)	1.956 (.0770)	2.311 (.0910)	0.8382 (.03300)	1.778 (.0700)
16	15.90 (.626)	2.845 (.1120)	3.226 (.1270)	0.8382 (.03300)	2.616 (.1030)
12	15.90 (.626)	4.064 (.1600)	4.547 (.1790)	0.8382 (.03300)	3.835 (.1510)
8	16.027 (.631)	7.290 (.2870)	7.899 (.3110)	0.8382 (.03300)	7.010 (.2760)

NOTES:
1. Dimensions are in millimeters.
2. Inch equivalents are given for information only.
3. Material: Hardened tool steel.
4. Finish: 32 microinches polished.
5. Use with store receptacle and launcher receptacle MIL-DTL-83538/1 and MIL-DTL-83538/4.

FIGURE 5. Test gauge, socket, and retention.

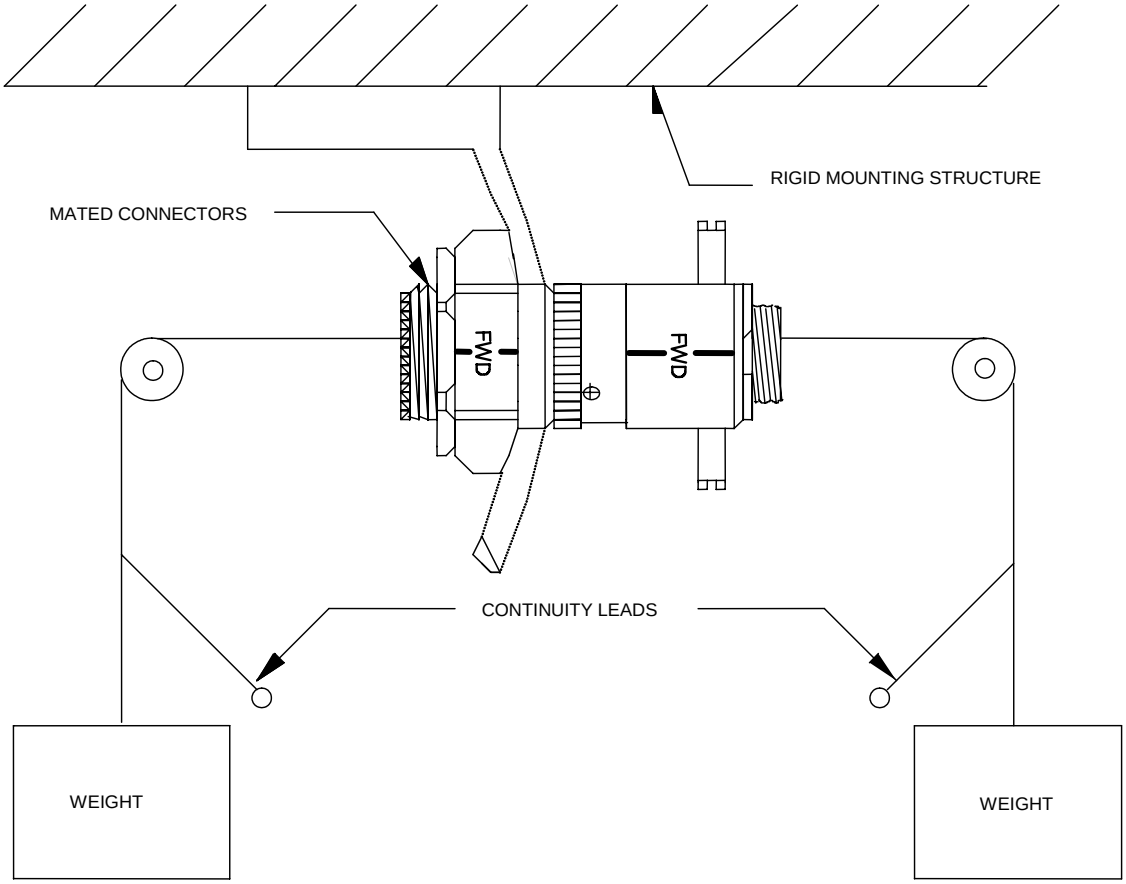

FIGURE 6. Typical fixturing for high temperature exposure with contact loading (orientation optional).

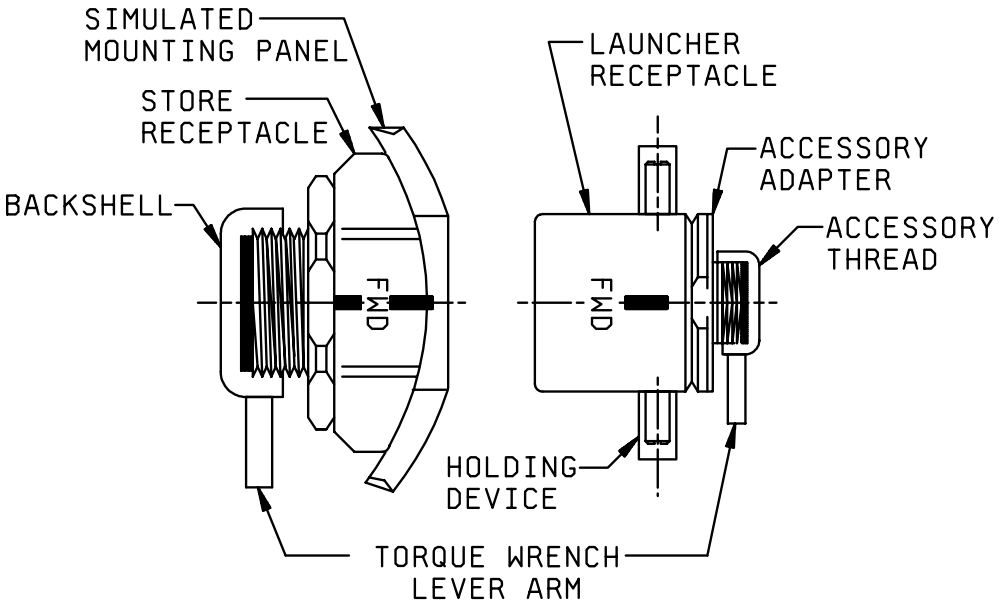

FIGURE 7. Rear accessory thread strength test setup.

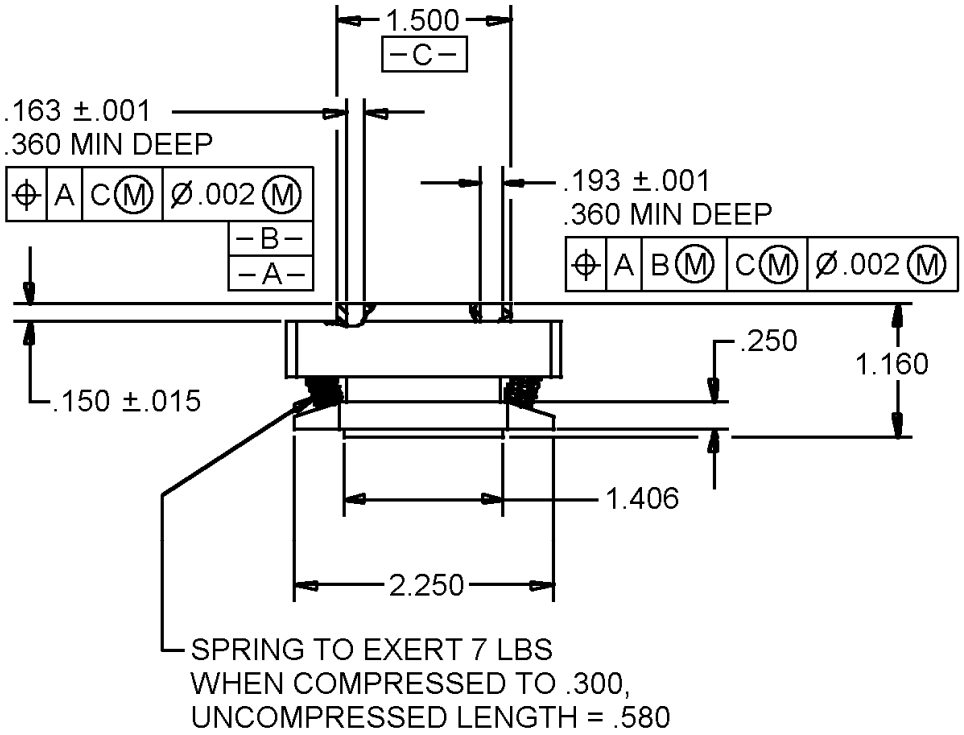

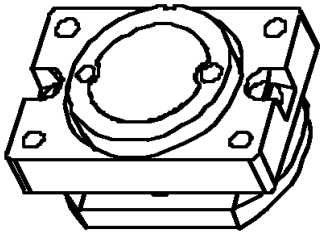

FIGURE 8. Vibration test accessory.

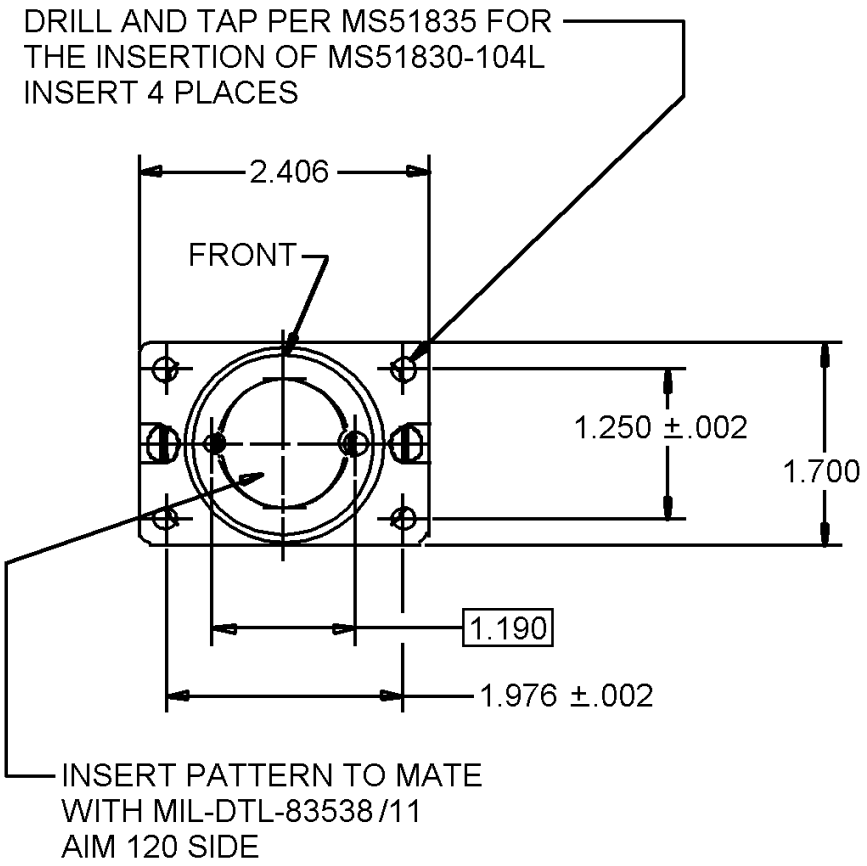

mm	Inches	mm	Inches	mm	Inches	mm	Inches	mm	Inches
.001	.00004	.163	.0064	.360	.014	1.250	.049	1.976	.077
.002	.00008	.193	.0076	.580	.023	1.406	.055	2.250	.088
.015	.0006	.250	.0098	1.160	.045	1.500	.059	2.406	.095
.150	.006	.300	.012	1.190	.047	1.700	.067		

NOTES:
1. Dimensions are in millimeters.
2. Inch equivalents are given for information only.

FIGURE 8. Vibration test accessory – Continued.

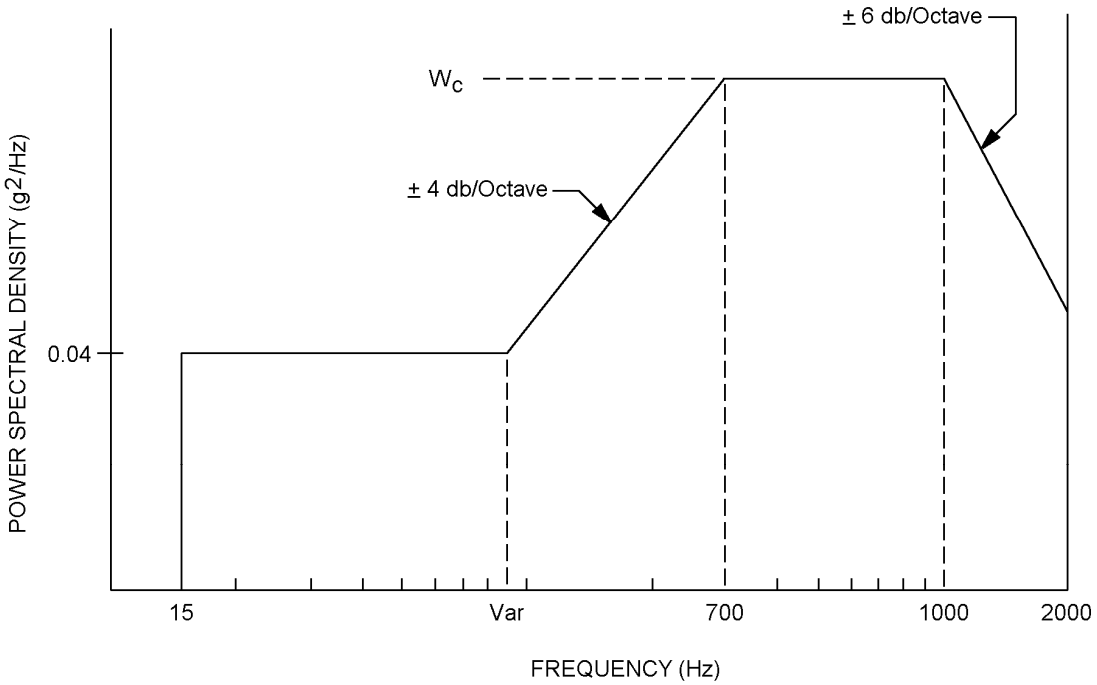

FIGURE 9. Random vibration spectrum for jet aircraft equipment.

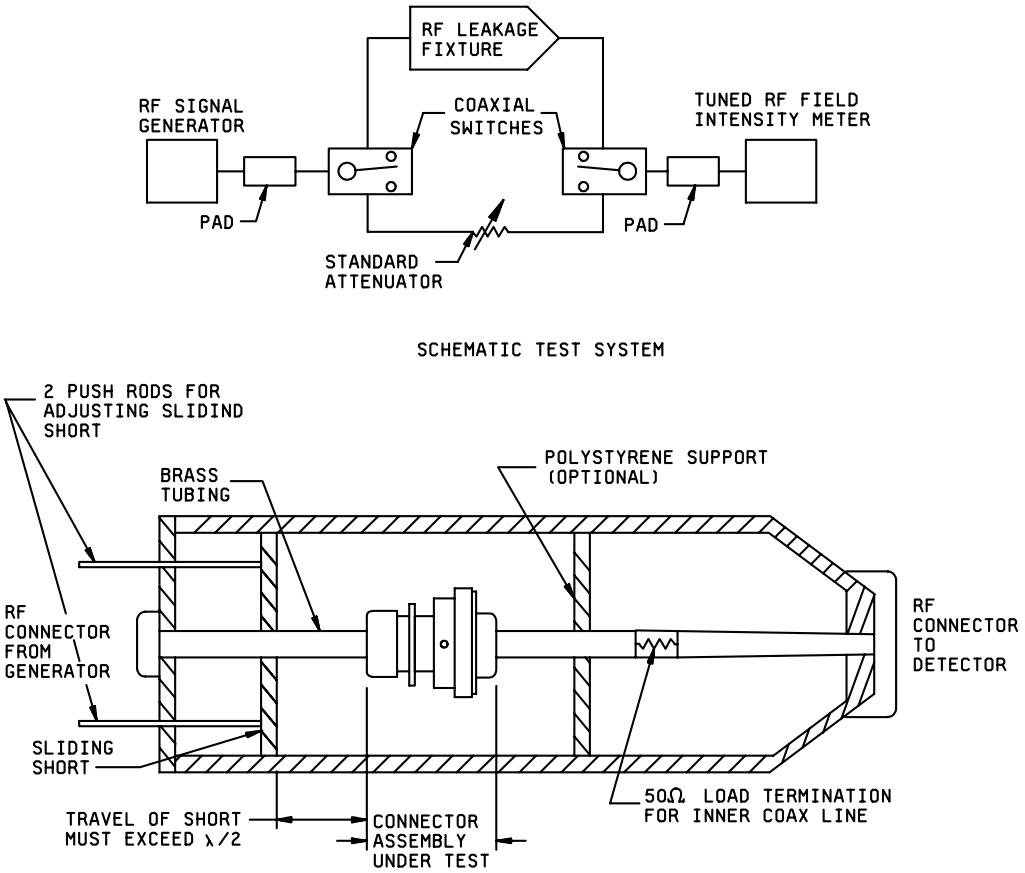

FIGURE 10. RFI leakage test fixture.

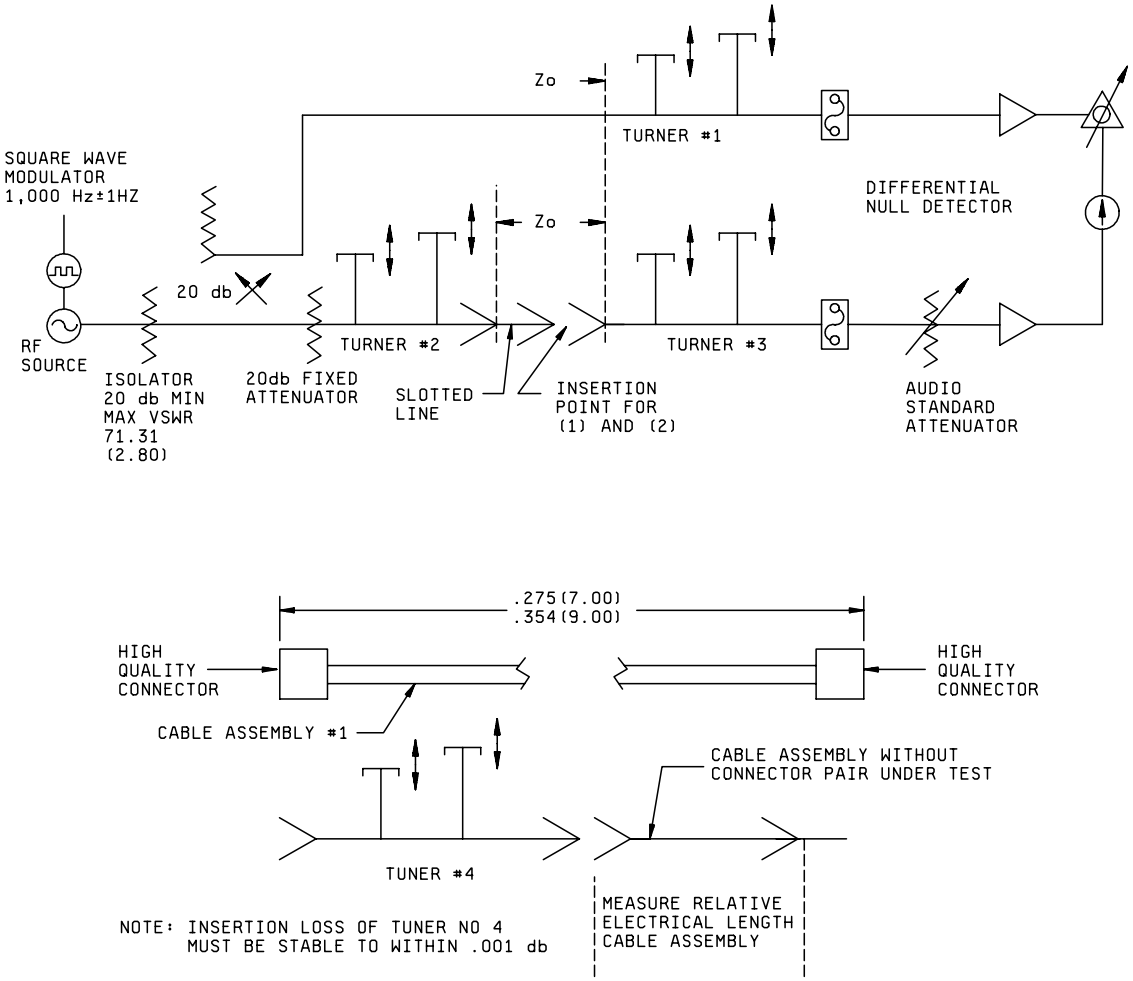

FIGURE 11. Method of insertion loss measurement of mated connector.

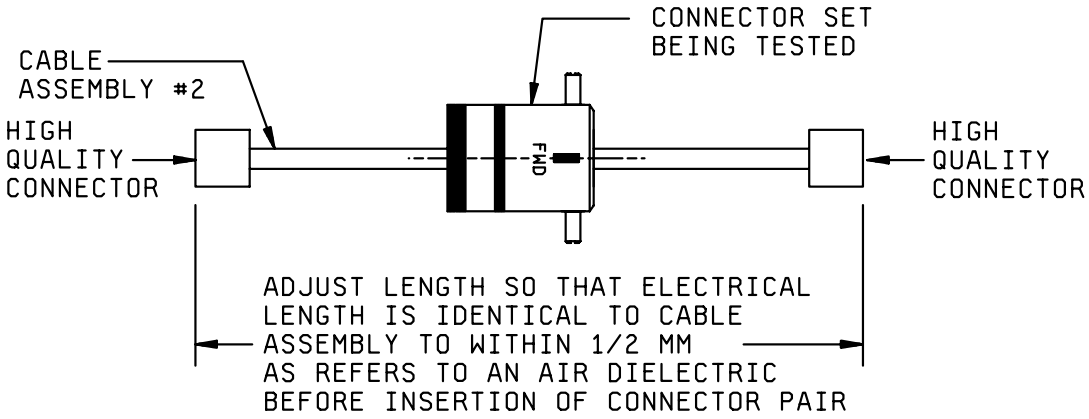

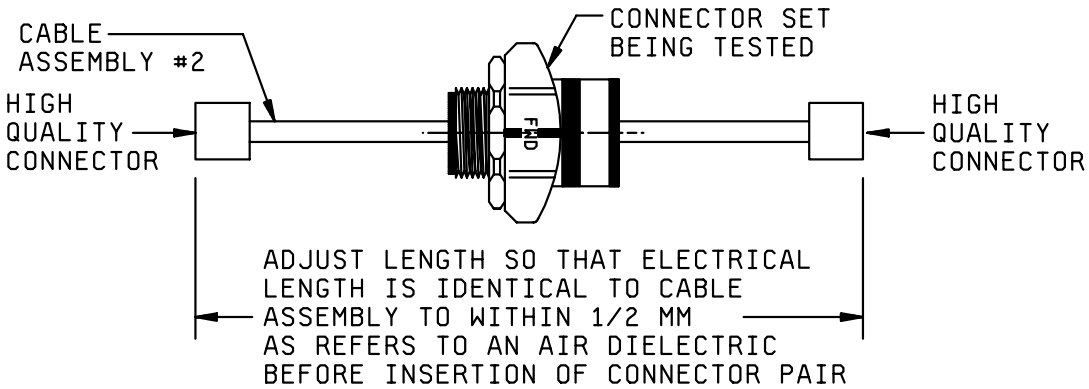

FIGURE 11. Method of insertion loss measurement of mated connector - Continued.

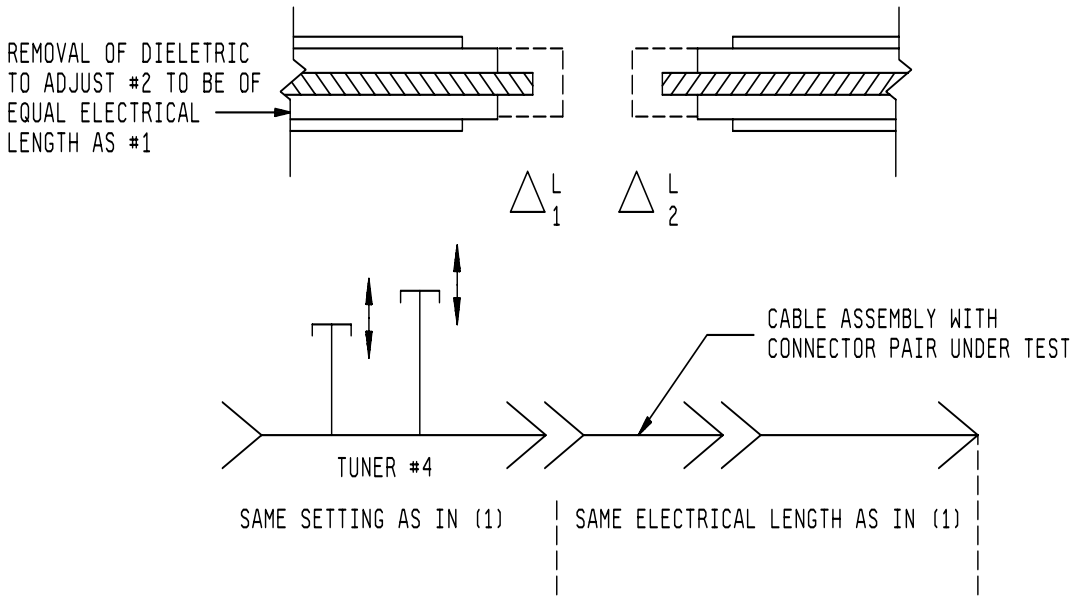

NOTES:
1. Dimensions are in millimeters.
2. Inch equivalents are given for information only.

FIGURE 11. Method of insertion loss measurement of mated connector - Continued.

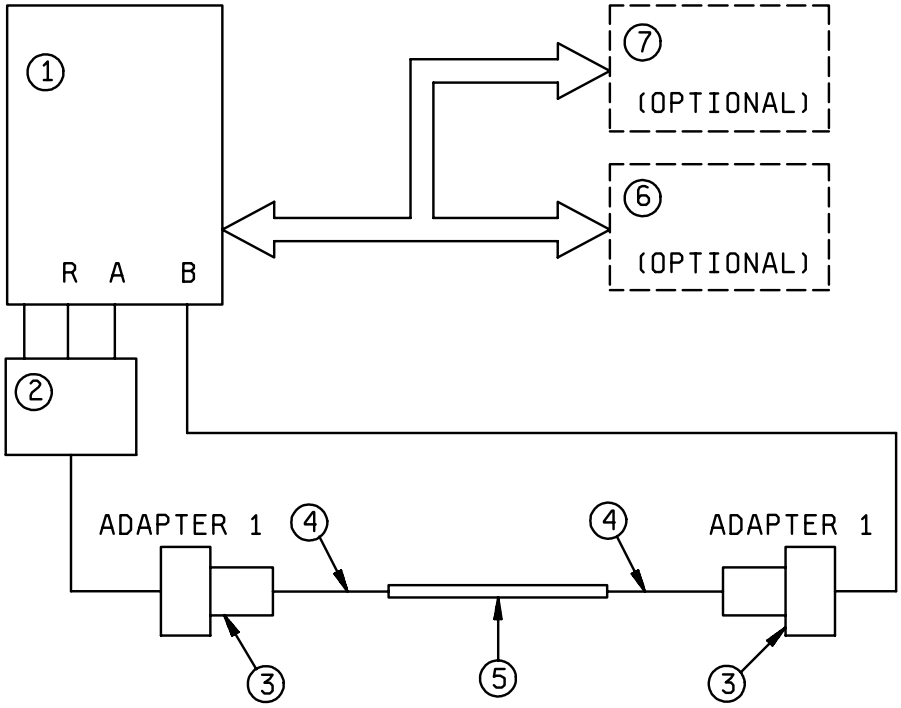

Equipment list

1. Vector network analyzer (HP8753A {OPT 010} or equivalent).
2. Transmission/reflection test set (HP85044A or equivalent).
3. Adapters.
4. M17/113-RG316 cable or JN1088 cable.
5. Mated contact pair (contact under test).
6. X-Y plotter.
7. Test controller (computer).

FIGURE 12. VSWR test setup.

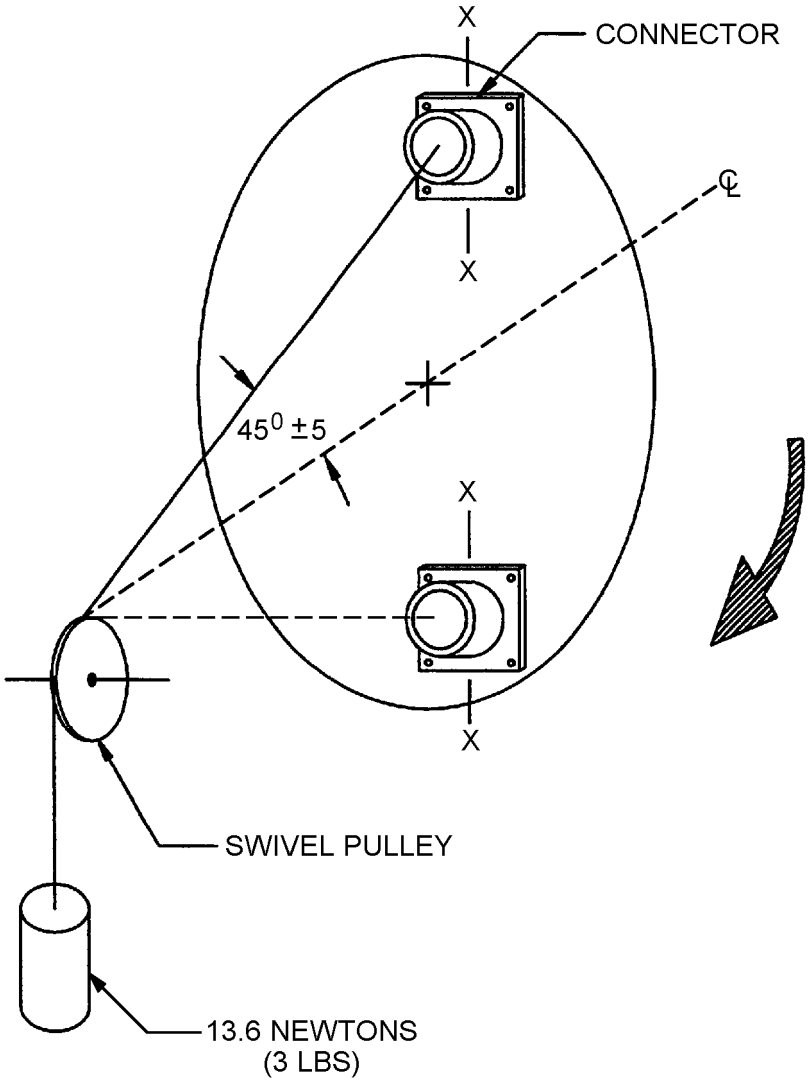

FIGURE 13. Contact walk-out test setup.

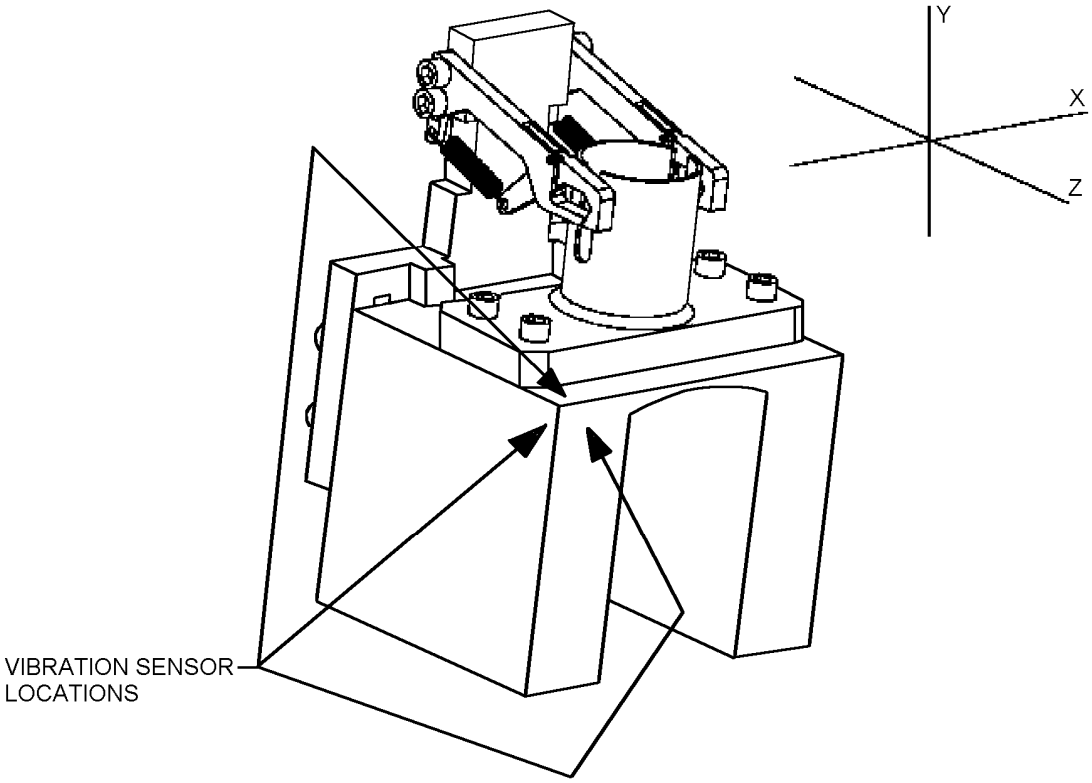

FIGURE 14. Vibration test fixture.

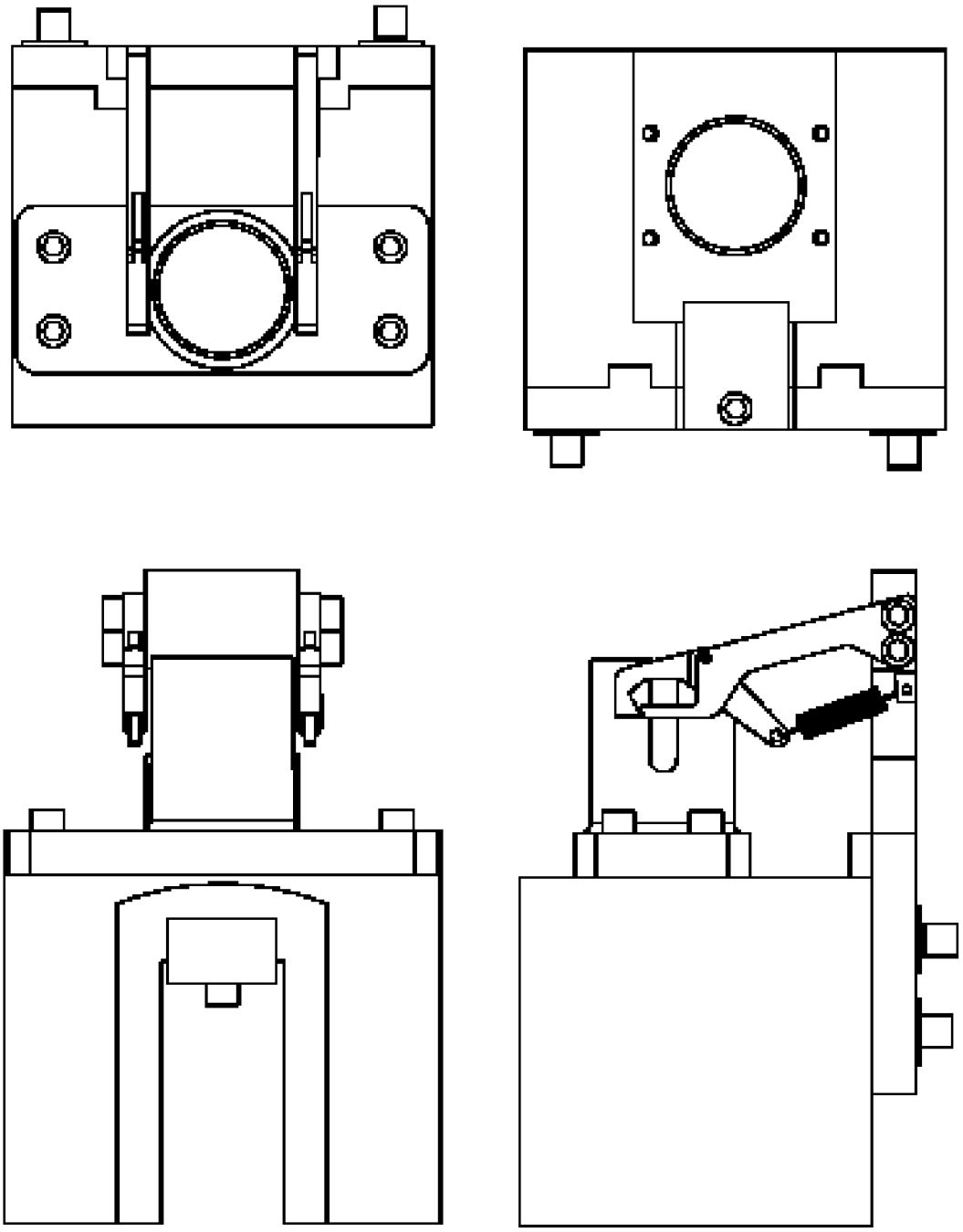

FIGURE 14. Vibration test fixture – Continued.

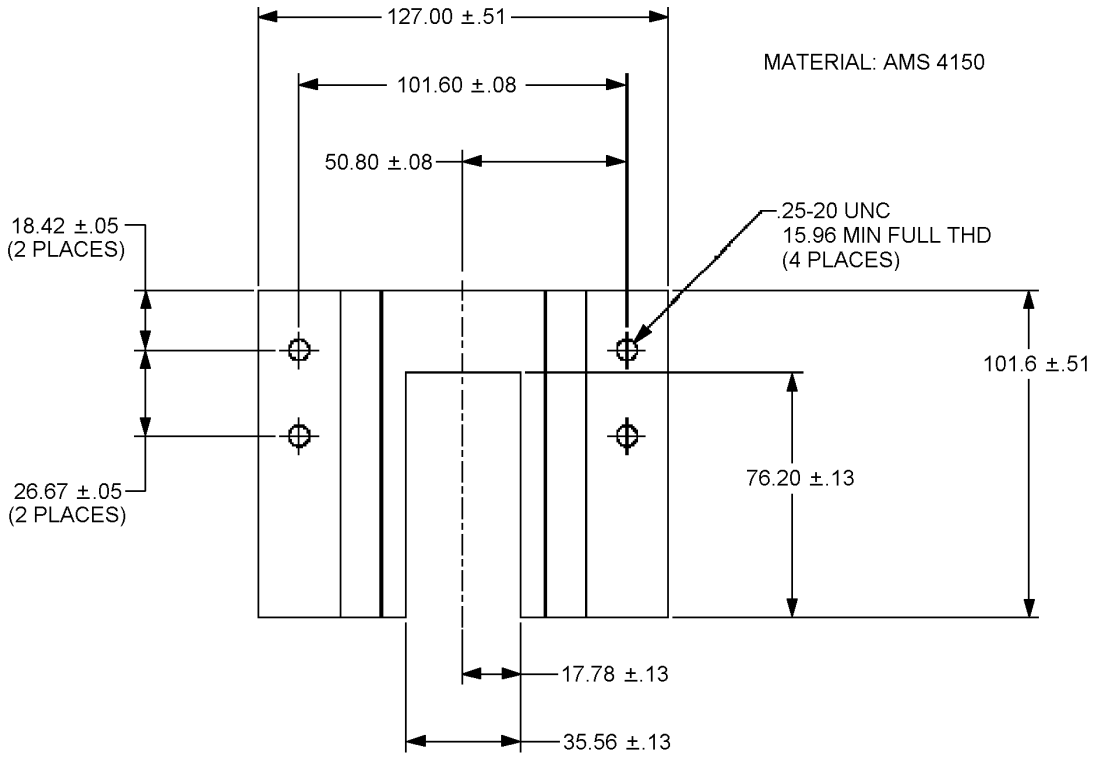

BASE

FIGURE 14. Vibration test fixture – Continued.

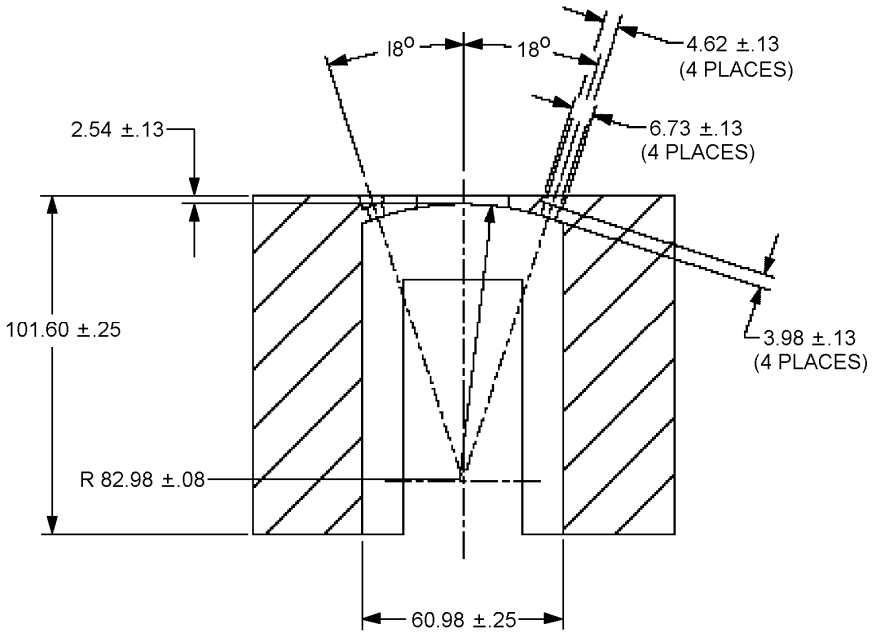

FIGURE 14. Vibration test fixture – Continued.

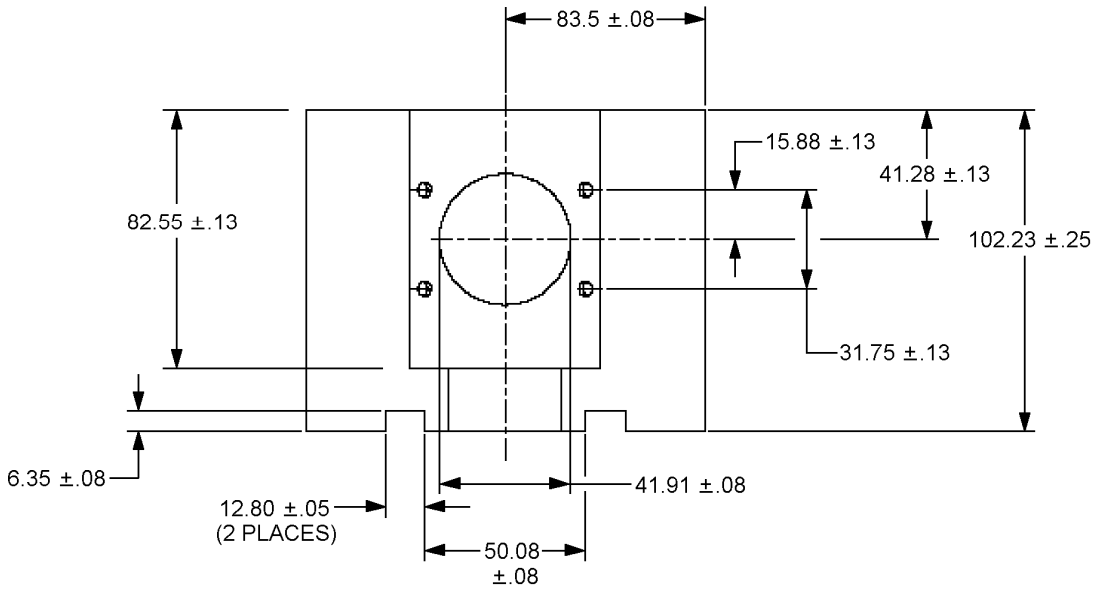

BASE

FIGURE 14. Vibration test fixture – Continued.

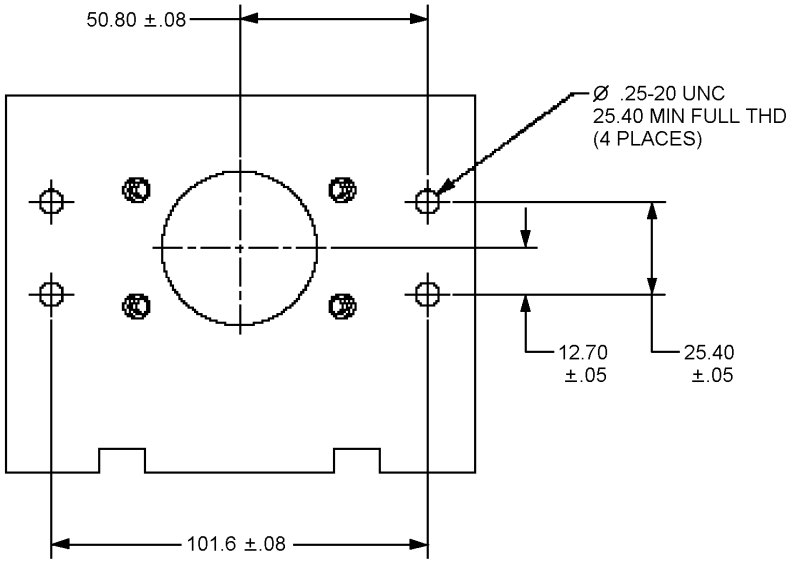

FIGURE 14. Vibration test fixture – Continued.

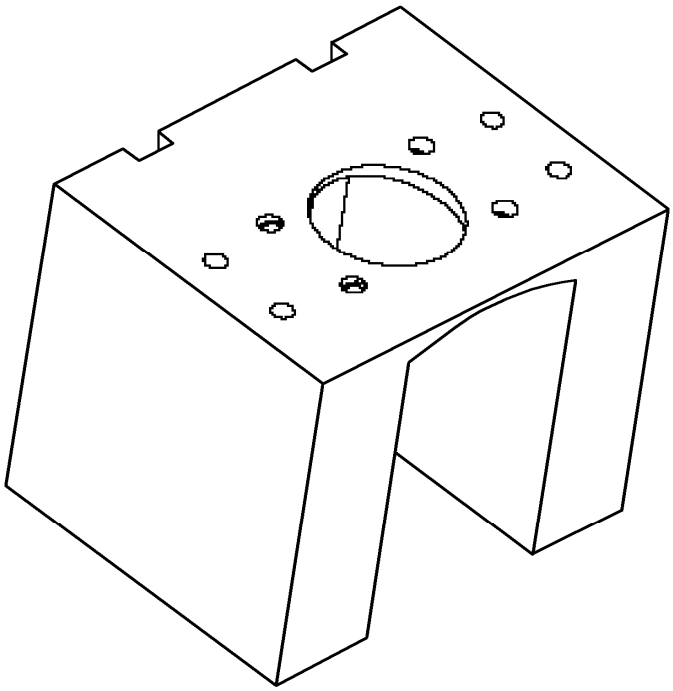

BASE

FIGURE 14. Vibration test fixture – Continued.

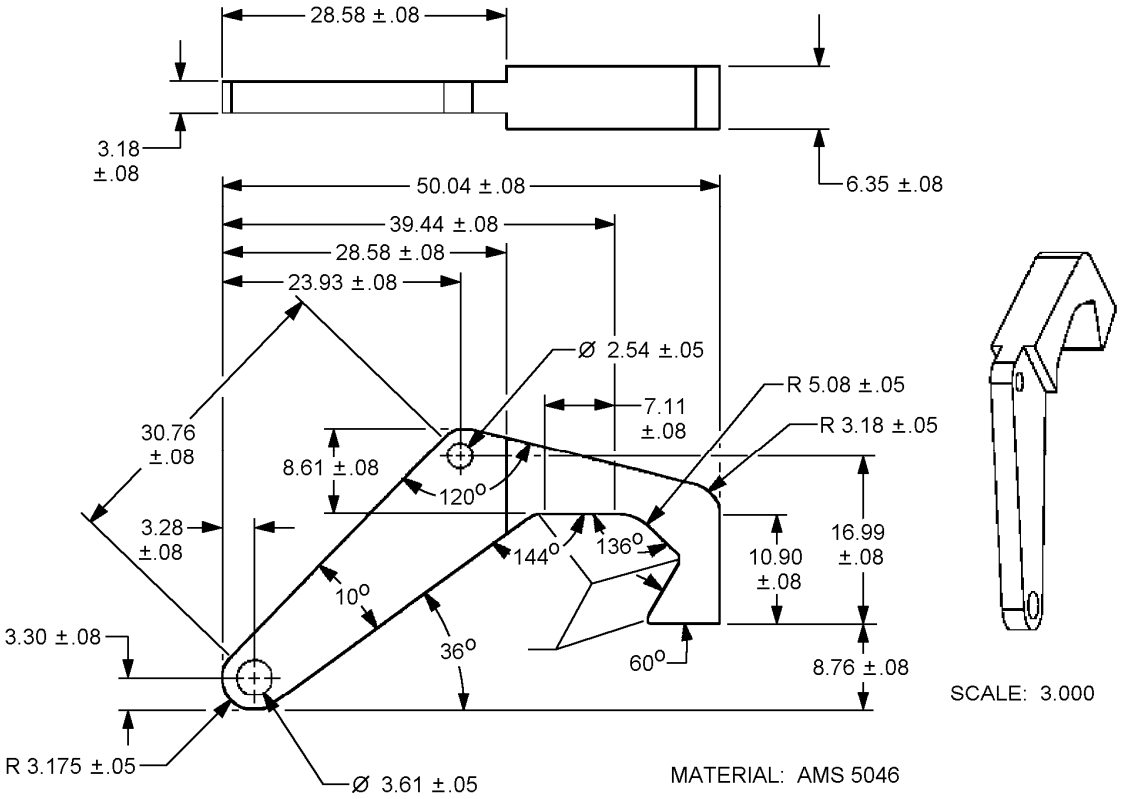

HOOK

FIGURE 14. Vibration test fixture – Continued.

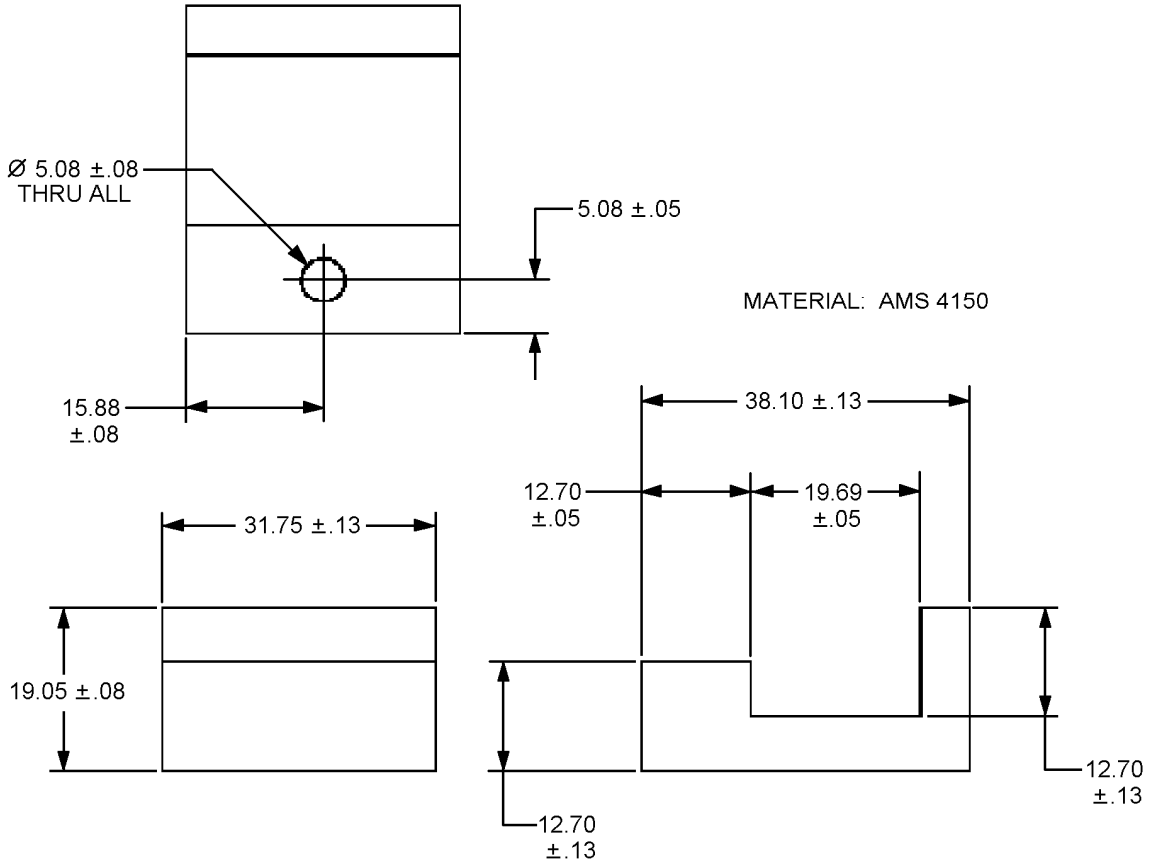

CLAMP

FIGURE 14. Vibration test fixture – Continued.

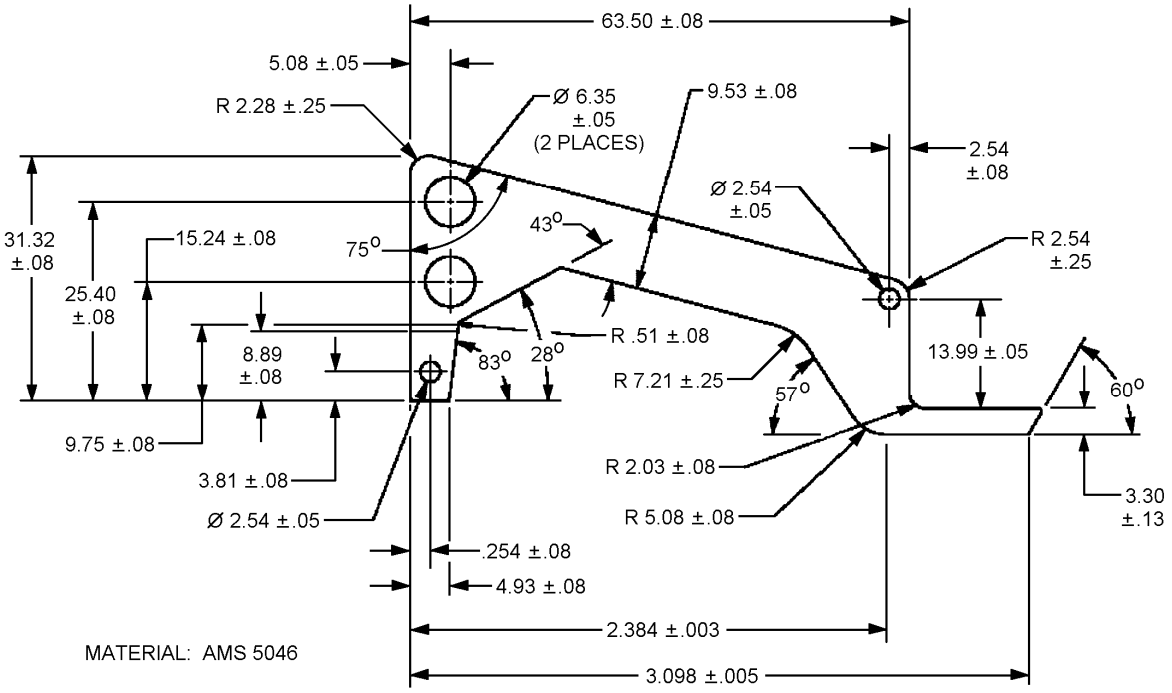

ARM

FIGURE 14. Vibration test fixture – Continued.

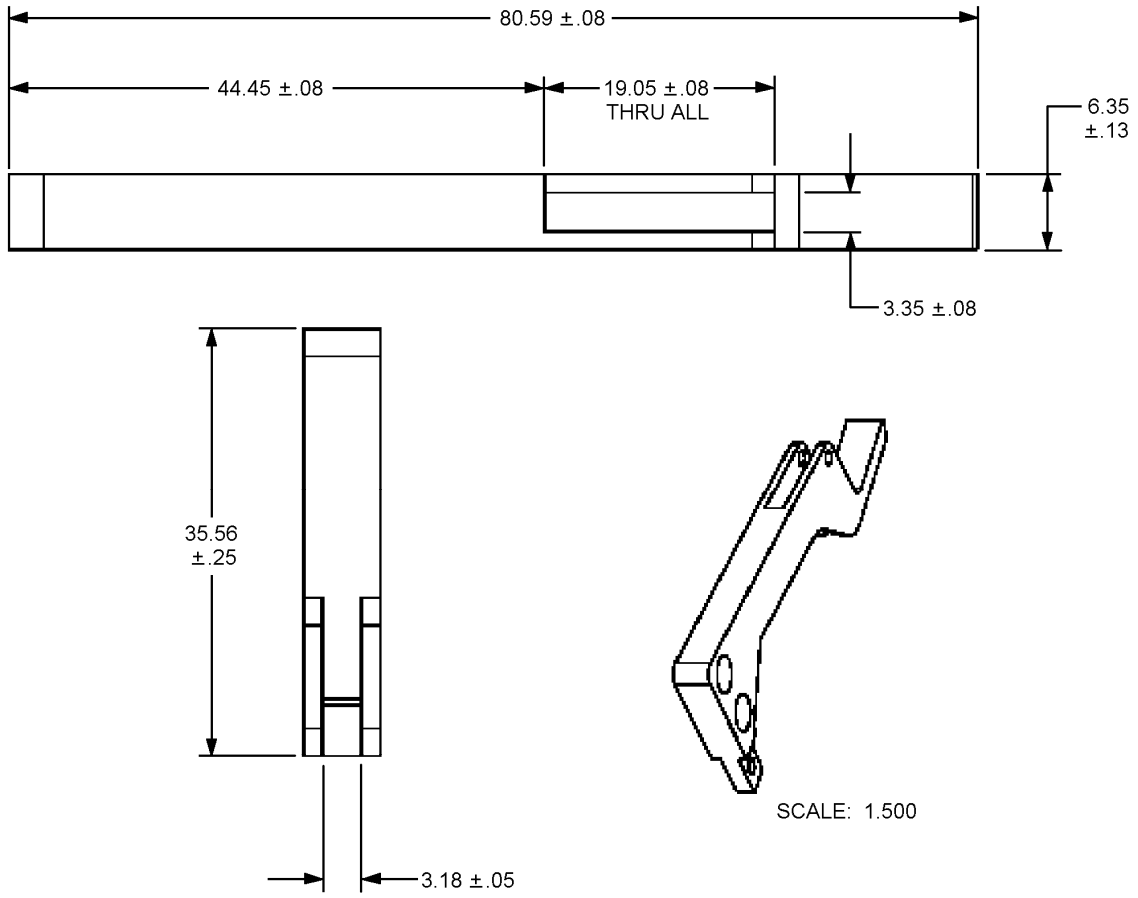

ARM

FIGURE 14. Vibration test fixture – Continued.

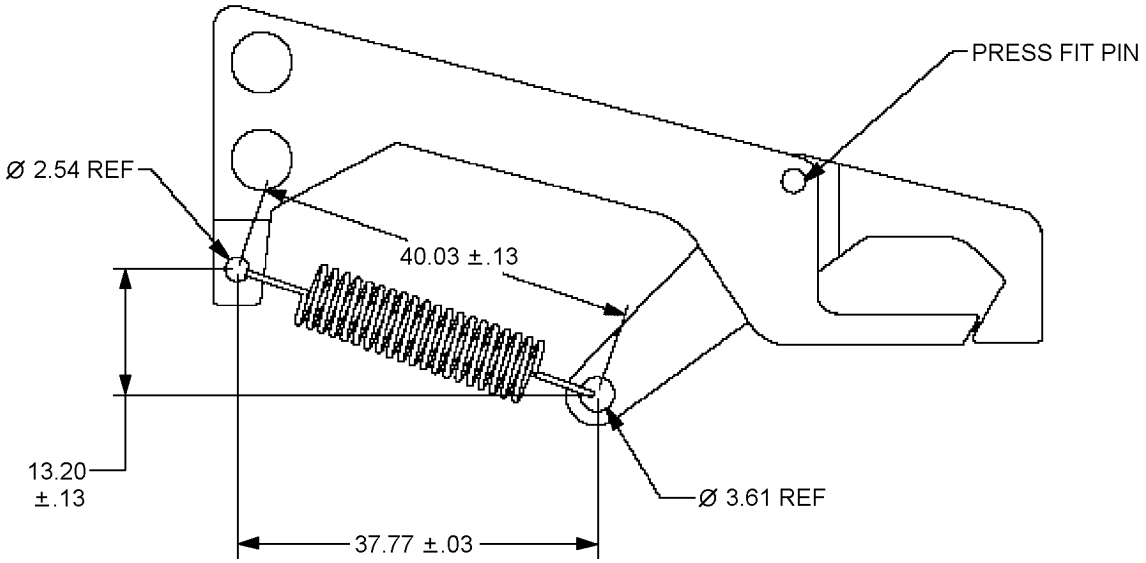

SPRING DATA:
O/D: 12.6 MM REF
WIRE DIAMETER: 2.12 MM REF
PULL TO PULL LENGTH: 35 MM REF
SPRING RATE: 75 POUNDS PER INCH
OF COILS = 10
SPRING MATERIAL: SPRING STEEL

ARM HOOK ASSEMBLY

FIGURE 14. Vibration test fixture – Continued.

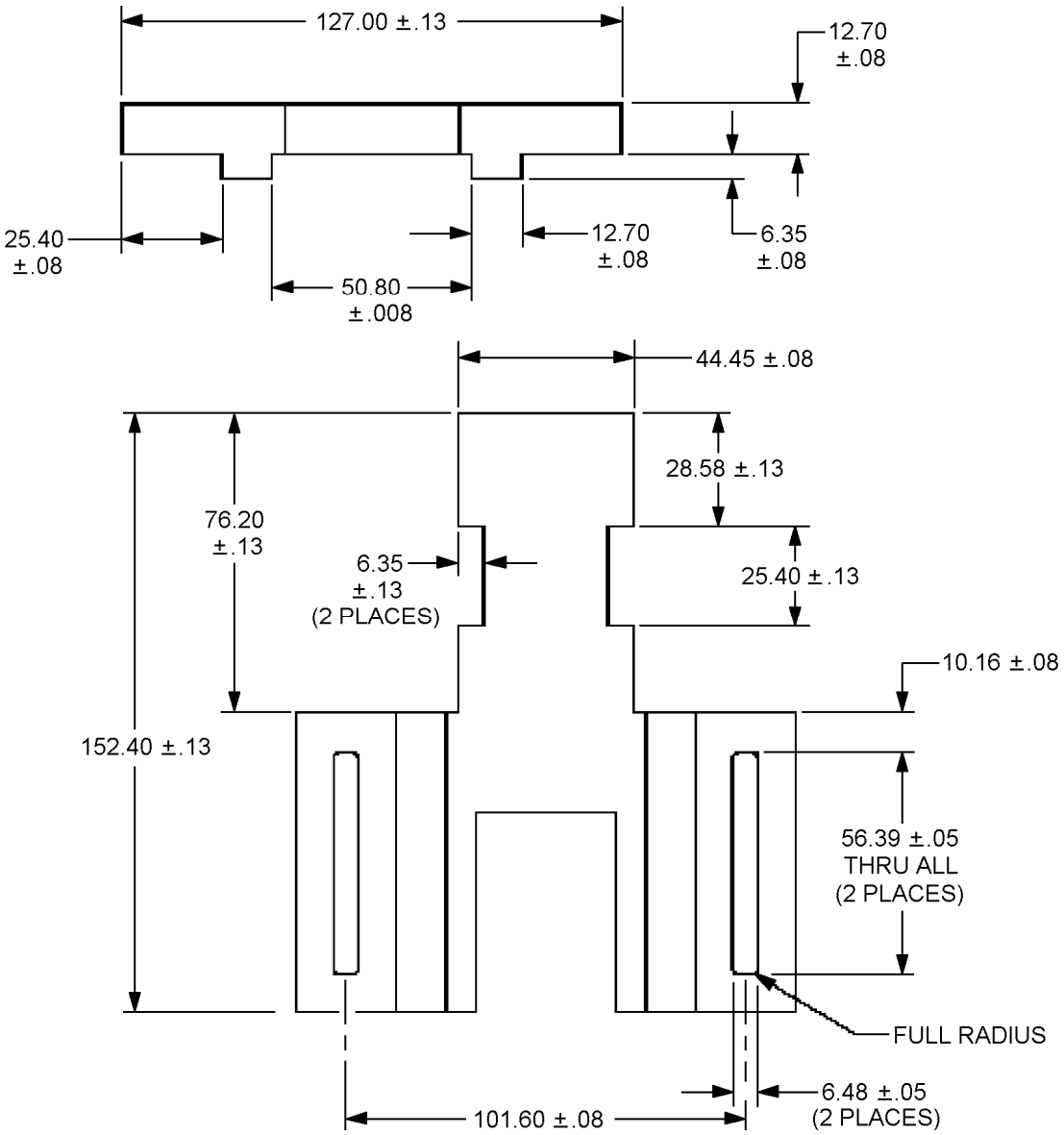

SLIDE

FIGURE 14. Vibration test fixture – Continued.

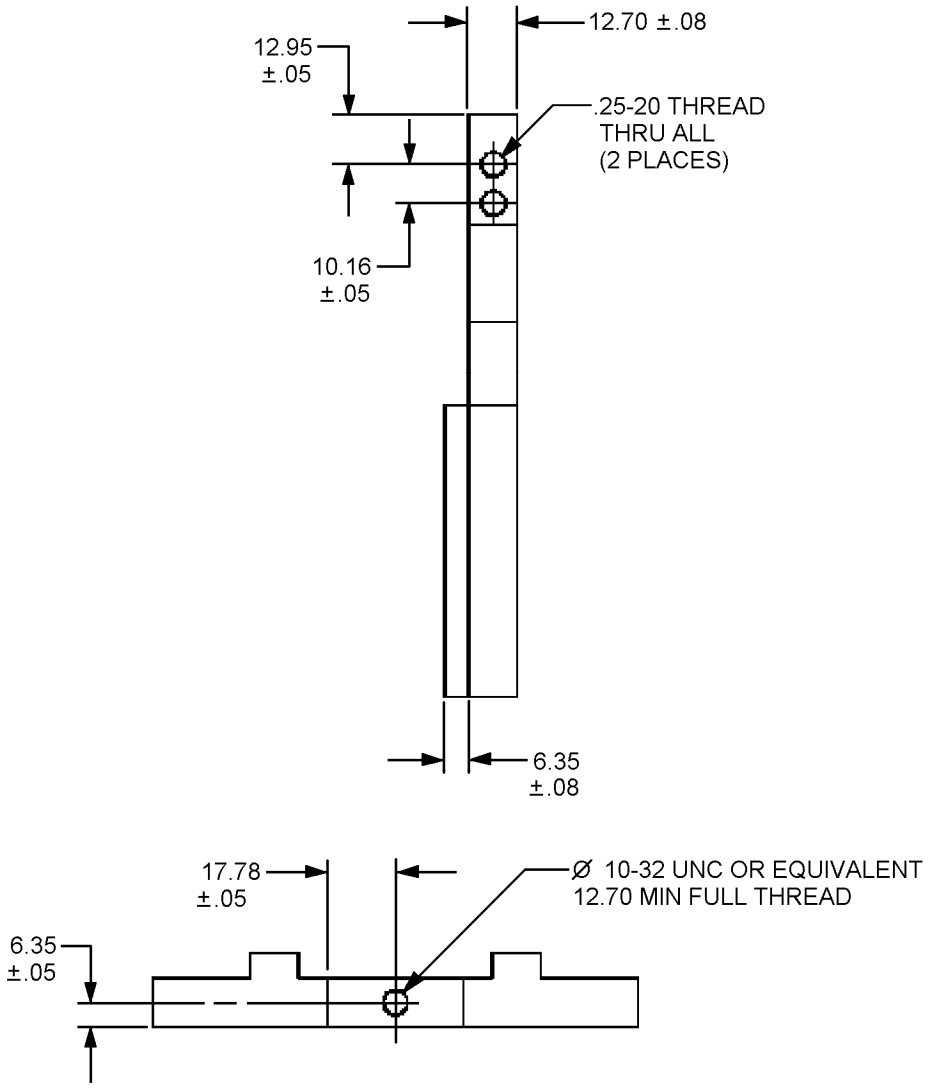

SLIDE

FIGURE 14. Vibration test fixture – Continued.

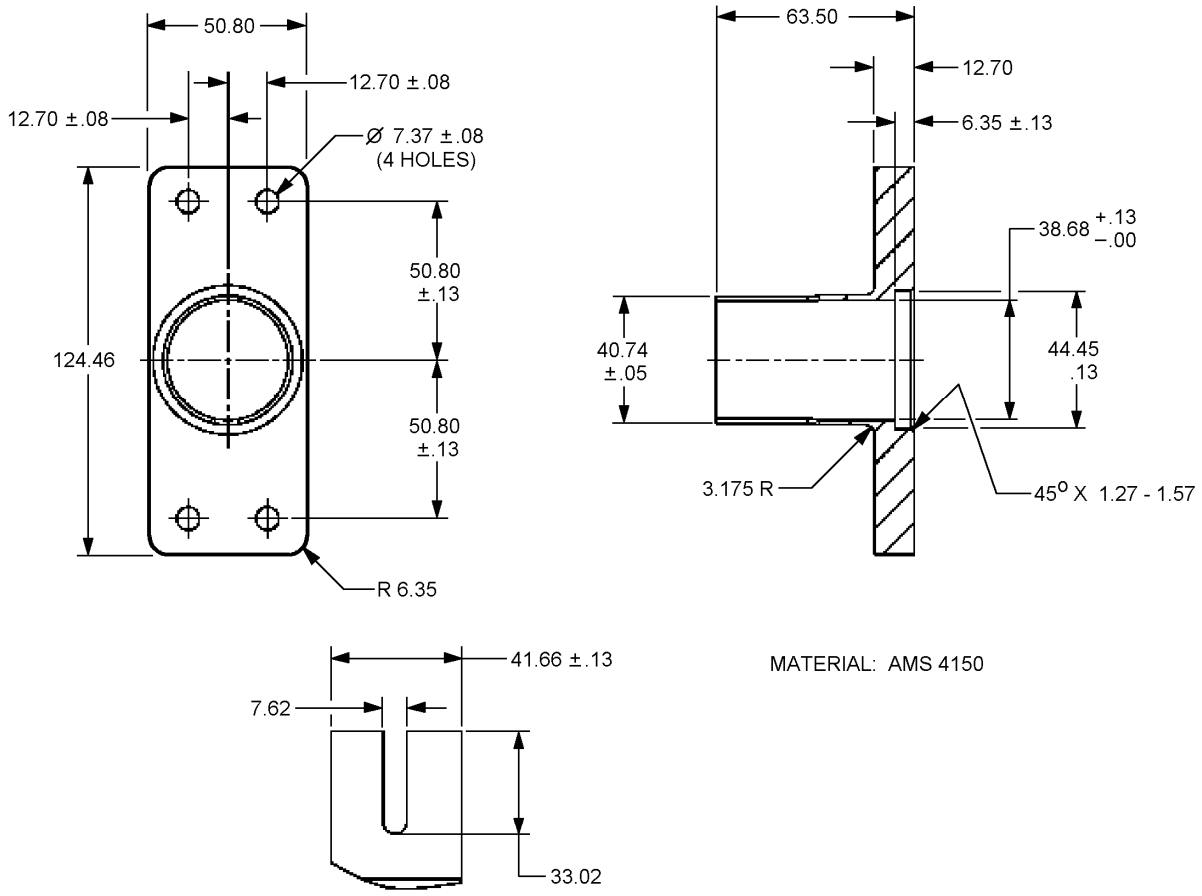

COLLAR

FIGURE 14. Vibration test fixture – Continued.

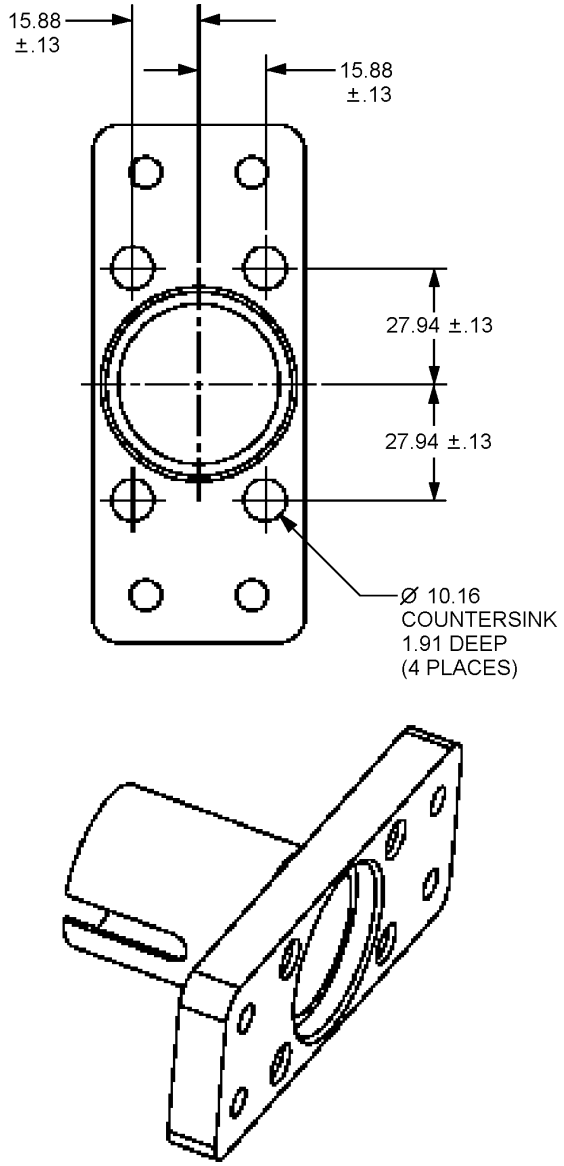

COLLAR

FIGURE 14. Vibration test fixture – Continued.

mm	Inches	mm	Inches	mm	Inches	mm	Inches	mm	Inches
0.003	0.00012	3.28	0.13	9.53	0.375	26.67	1.05	50.04	1.98
0.005	0.0002	3.35	0.132	9.75	0.384	27.94	1.10	50.80	2.00
0.05	0.002	3.61	0.142	10.16	0.40	28.58	1.125	56.39	2.22
0.08	0.003	3.81	0.15	10.90	0.43	30.76	1.21	60.98	2.40
0.13	0.005	3.98	0.156	12.60	0.496	31.32	1.23	63.50	2.50
0.25	0.0098	4.62	0.182	12.70	0.50	31.75	1.25	76.20	3.00
0.254	0.01	4.93	0.194	12.80	0.50	33.02	1.30	80.59	3.17
0.51	0.02008	5.08	0.20	12.95	0.51	35.56	1.40	82.55	3.25
1.27	0.05	6.35	0.25	13.20	0.52	37.77	1.487	82.98	3.27
1.57	0.062	6.48	0.255	13.99	0.55	38.10	1.50	101.60	4.00
1.91	0.0752	2.384	0.094	15.24	0.60	38.68	1.52	102.23	4.025
2.03	0.08	6.73	0.265	15.88	0.625	39.44	1.55	124.46	4.90
2.12	0.0835	7.11	0.28	16.99	0.67	40.03	1.58	127.00	5.00
2.28	0.09	7.21	0.284	17.78	0.70	40.74	1.60	152.40	6.00
2.384	0.094	7.37	0.29	18.42	0.725	41.66	1.64		
2.54	0.10	7.62	0.30	19.05	0.75	41.91	1.65		
3.098	0.122	8.61	0.339	19.69	0.78	44.45	1.75		
3.175	0.125	8.76	0.345	23.93	0.94				
3.18	0.126	8.89	0.35	25.40	1.00				

NOTES:
1. Dimensions are in millimeters.
2. Inch equivalents are given for information only.
3. Material: AMS 4150 and AMS 5046.

FIGURE 14. Vibration test fixture – Continued.

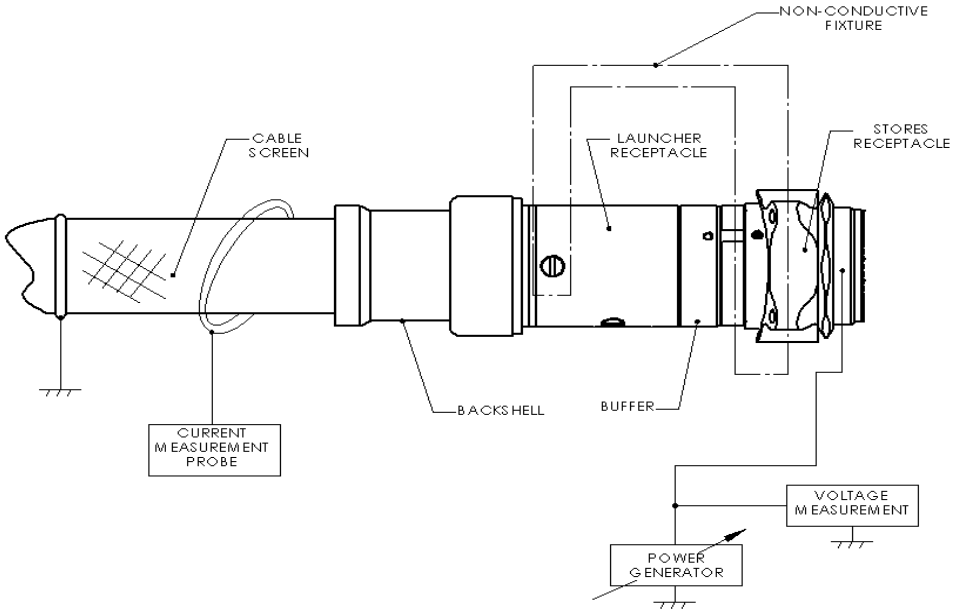

FIGURE 15. Typical test arrangement for launcher/buffer/store set.

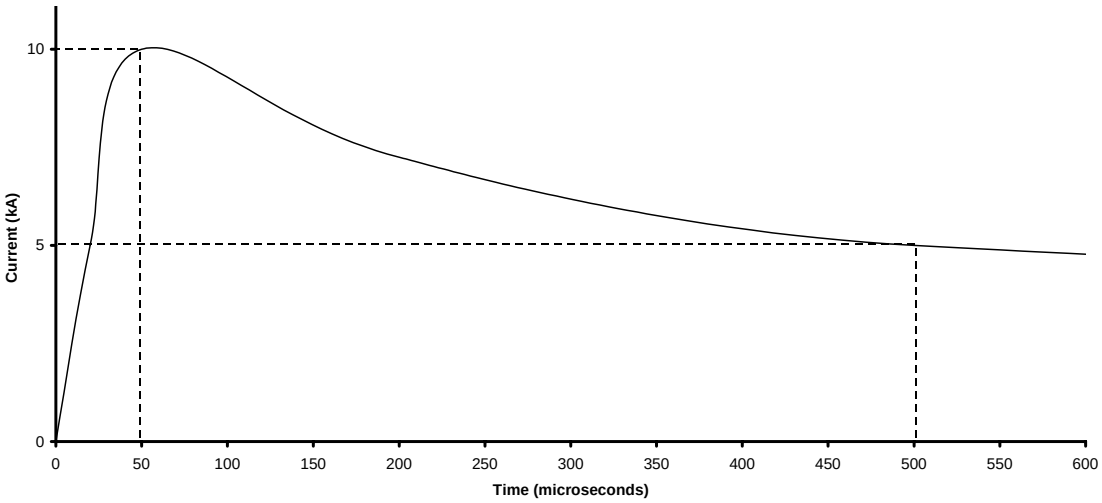

FIGURE 16. Slow lightning current pulse maximum amplitude 10kA.

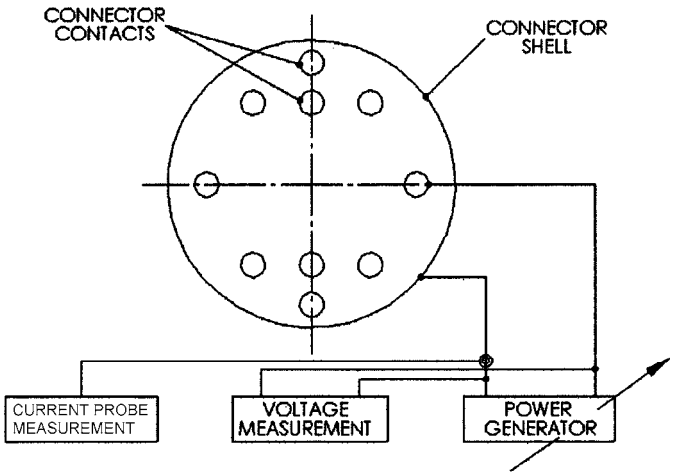

FIGURE 17. Typical test arrangement for testing between contact and shell.

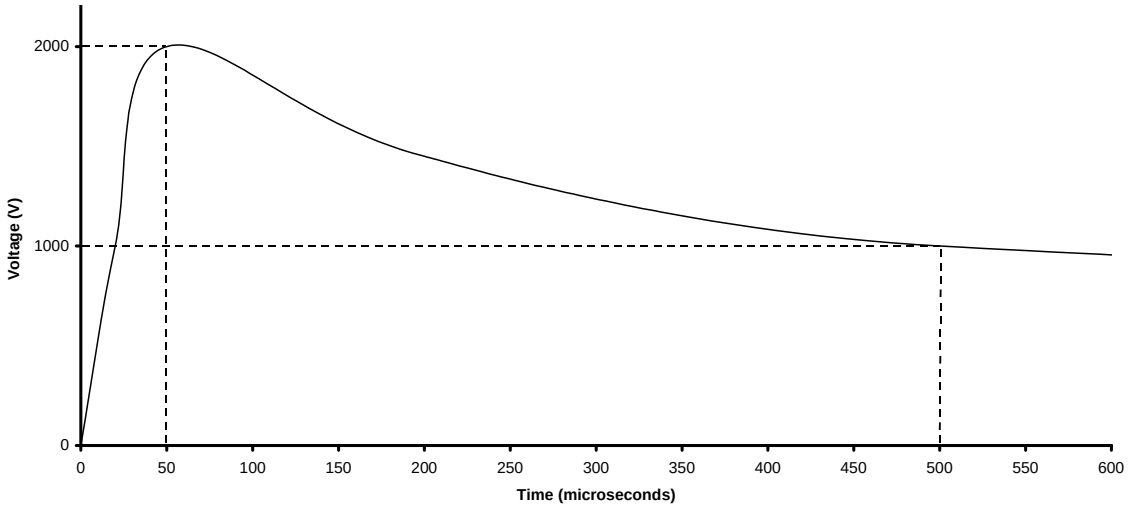

FIGURE 18. Slow lightning voltage pulse maximum amplitude 2kV.

CONCLUDING MATERIAL

Custodians:
Army - CR
Navy - AS
Air Force - 11
DLA - CC

Review activities:
Army - AR, MI
Navy - EC, MC, OS
Air Force - 19, 99

Preparing activity:
DLA -CC

(Project 5935-2006-052)

NOTE: The activities listed above were interested in this document as of the date of this document. Since organizations and responsibilities can change, you should verify the currency of the information above using the ASSIST Online database at http://assist.daps.dla.mil.