METRIC

MIL-DTL-83526/20C
w/Amendment 1
9 February 2015
SUPERSEDING
MIL-DTL-83526/20C
23 September 2014

DETAIL SPECIFICATION SHEET

CONNECTOR, FIBER OPTIC PLUG, CIRCULAR HERMAPHRODITIC, IN-LINE MOUNT, 2 AND 4 POSITIONS, EXPANDED BEAM

This specification is approved for use by all Departments and Agencies of the Department of Defense.

The requirements for acquiring the product described herein shall consist of this specification sheet and MIL-DTL-83526.

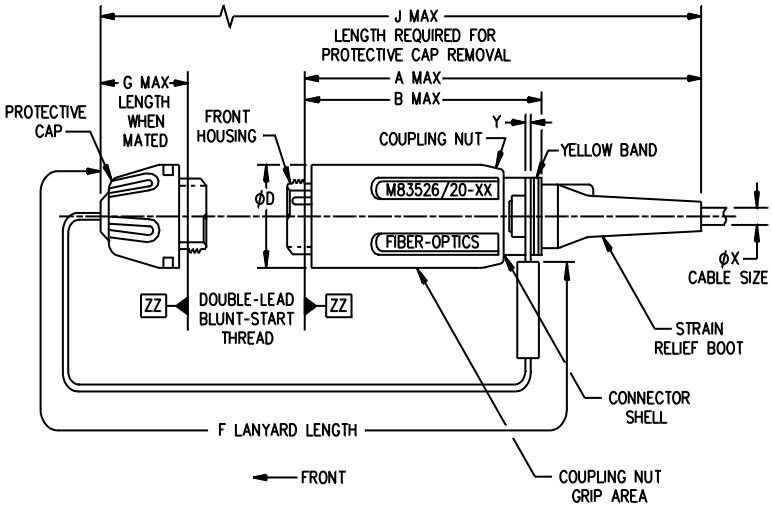

NOTES:
1. Grip features are required on the coupling nut and protective cap and shall provide for sufficient hand grip to facilitate coupling and uncoupling.
2. See table I for dimensional values.

FIGURE 1. Plug connector with protective cap.

AMSC N/A

FSC 6060

TABLE I. Plug connector with hermaphroditic protective cap dimensions.

Designator	Descriptions	Dimensions 1/			
		Maximum		Minimum	
		mm	Inches	mm	Inches
A	Length from mating face to end of strain relief boot	140	5.5	---	---
B	Length from mating face to end of rear housing	83	3.3	---	---
D	Diameter of connector over coupling nut	27.2	1.07	---	---
F	Length of lanyard 2/	---	---	---	---
G	Length from mating face to installed end of protective cap	29	1.1	---	---
J	Length required for protective cap removal	180	7.1	---	---
X	Diameter of fiber optic cable	5.95	.23	5.65	.22
Y	Width of yellow band	---	---	1.5	.06

1/ Inch equivalents may contain rounding inaccuracies and are given for reference purposes only.
2/ Lanyard length to be minimum necessary to facilitate ease of installation and removal of protective cap. Lanyard shall not be attached to the coupling nut.

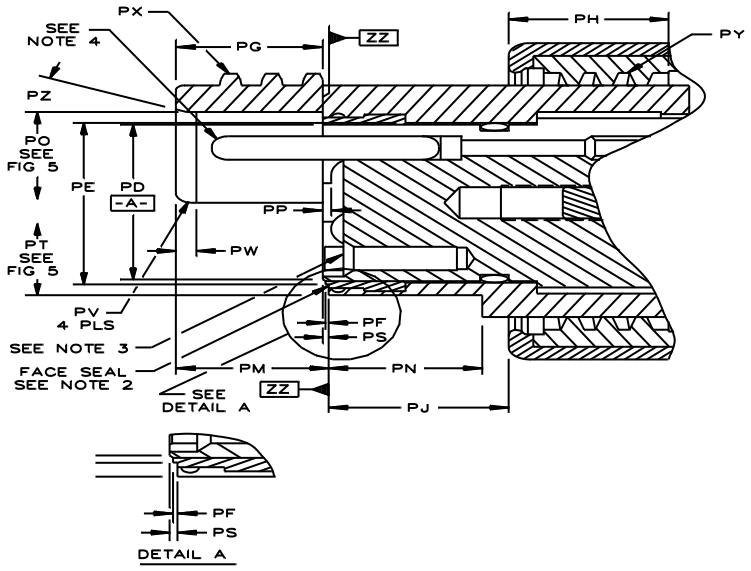

NOTES:

1. See table II for dimensional values.
2. Face seal configuration optional provided all performance requirements are met.
3. Chamfer 2.6 mm OD min X 45°.
4. Pin geometry is optional provided all performance requirements are met.
5. Break all sharp edges.

FIGURE 2. Plug interface dimensions, coupling nut fully retracted (section view A-A, see figure 5).

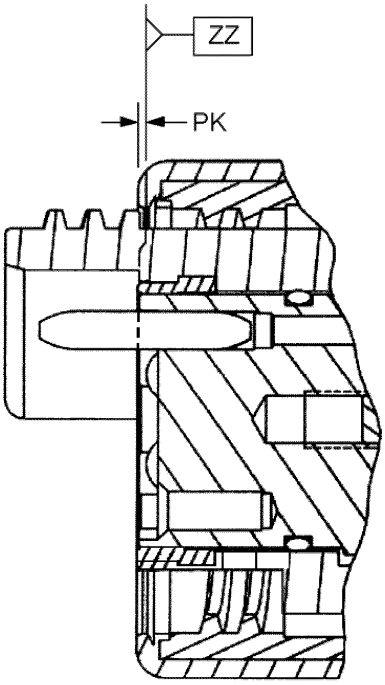

NOTES:
1. See table II for dimensional values.
2. Pin geometry is optional provided all performance requirements are met.
3. Chamfer 2.6 mm OD min X 45°.

FIGURE 3. Plug interface dimension, coupling nut fully forward (section view A-A, see figure 5).

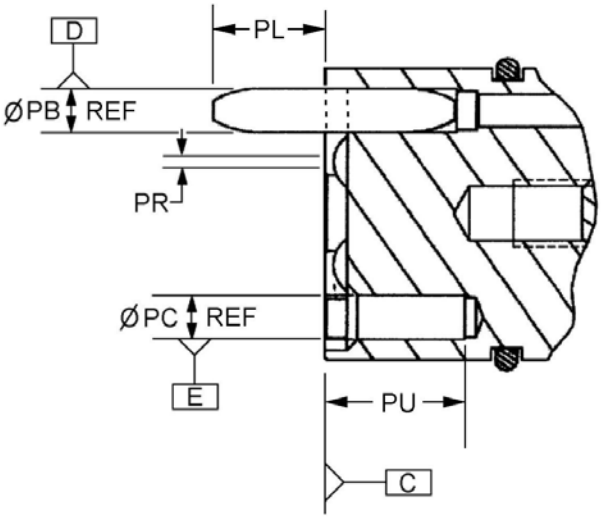

NOTE: See table II for dimensional values.

FIGURE 4. Expanded beam insert mechanical reference plane (section view B-B, see figure 5).

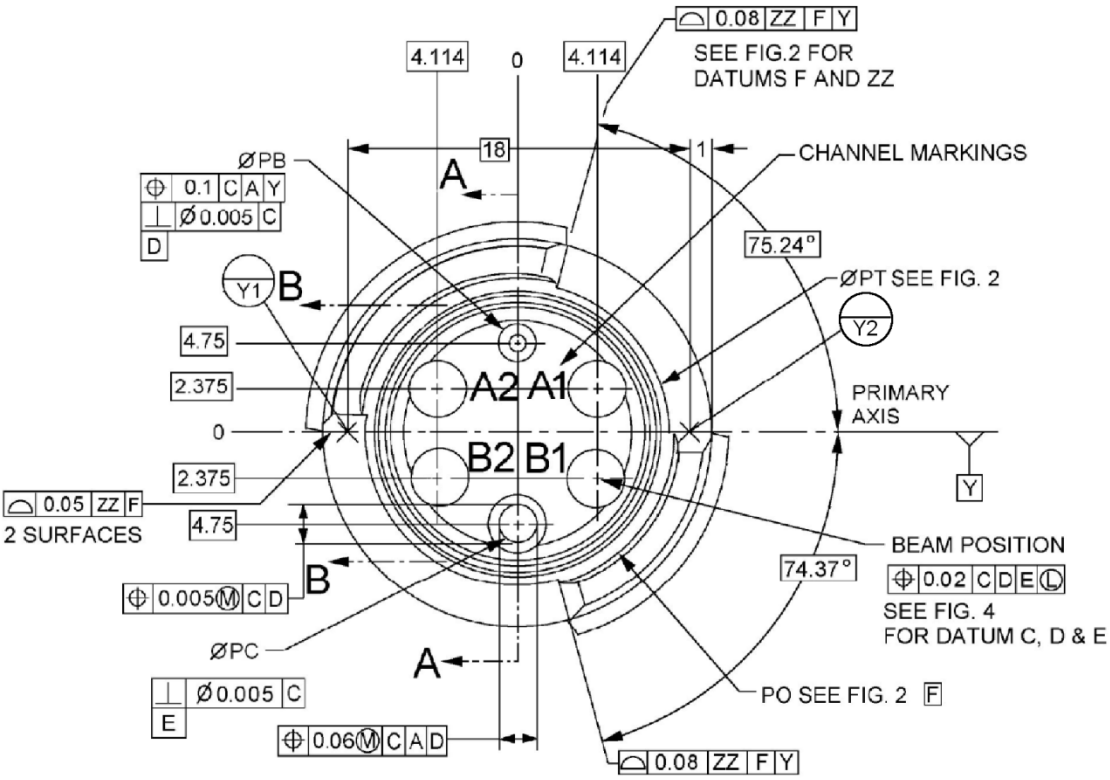

NOTE: See table II for dimensional values.

FIGURE 5. Connector mating face dimensions (4 channel).

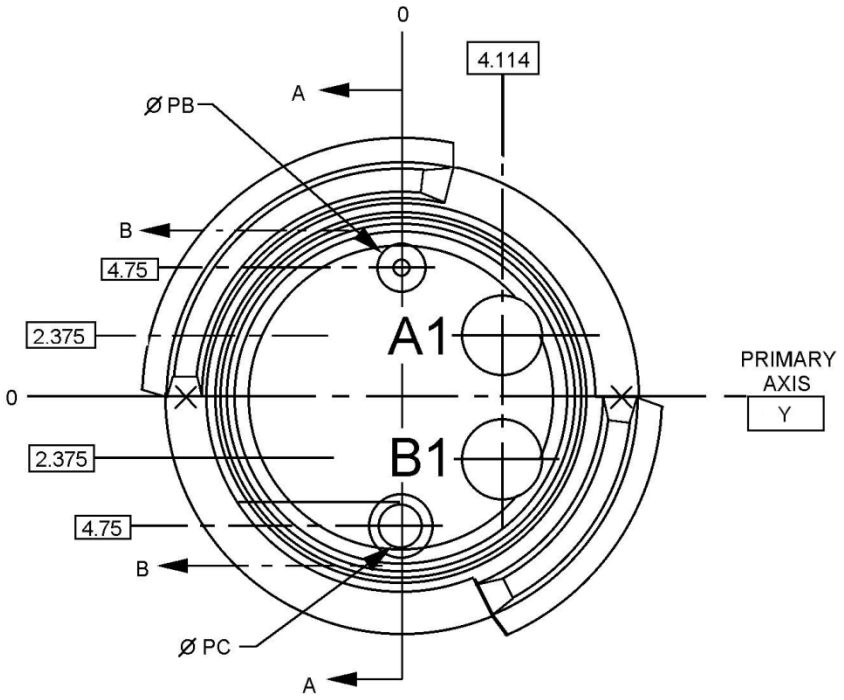

NOTE: See table II for dimensional values.

FIGURE 6. Connector mating face dimensions (2 channel).

TABLE II. Plug interface dimensions.

Designator	Descriptions	Dimensions 1/			
		Maximum		Minimum	
		mm	Inches	mm	Inches
PB	Alignment pin diameter	2	.08	1.998	.079
PC	Alignment receptacle diameter	2.018	.080	2.013	.079
PD	Insert outer diameter	13.34	.525	13.29	.523
PE	Facial seal diameter centerline	14.02	.552	13.945	.549
PF	Plug body facial seal protrusion	0.35	.013	0.1	.004
PG	Plug body thread length	7.1	.280	6.9	.272
PH	Coupling nut thread length	8.3	.327	7.1	.280
PJ	Coupling nut rearward limit relative to ZZ	12.5	.492	10.7	.421
PK	Coupling nut forward limit relative to ZZ	0.4 2/	.016	0.0	0.0
		0.0 4/	0.0	-.30	-.012
PL	Alignment pin protrusion	5.1	.201	4.9	.193
PM	Plug body threaded flange protrusion	7.1	.280	6.9	.272
PN	Plug body flange recess depth	7.6	.299	7.3	.287
PO	Threaded flange protrusion inside diameter	15.95	.628	15.80	.622
PP	Lens surface recess depth from insert mating face	0.5	.020	0.35	.014
PR	Optical axis position tolerance	See figure 4 feature control frame			
PS	Insert mating face protrusion	0.65	.026	0.2	.008
PT	Plug body flange recess diameter	15.6	.614	15.5	.610
PU	Alignment receptacle depth			5.3	.21
PV	Flange corner	1 ± 0.2 X 45˚ chamfer or 1 ± .2 rounded			
PW	Flange chamfer depth	1.2	.05	0.8	.03
PX	Plug body thread	Tr 22.02 x 4 (P2) – Modified external thread blunt start in accordance with ISO 2903. Minor diameter: 20.14/20.04 mm (.793/.789 inches) Major diameter: 22.02/21.92 mm (.867/.863 inches) Pitch diameter: 20.812/20.638 mm (.8194/.8125 inches)			
PY	Coupling nut thread	Tr 22.02 x 4 (P2) – Modified internal thread in accordance with ISO 2903. Minor diameter: 20.35/20.25 mm (.801/.797 inches) Major diameter: 22.32/22.22 mm (.879/.875 inches) Pitch diameter: 21.723/21.548 mm (.8552/.8483 inches)			
PZ	Flange chamfer angle	15˚ ± 3˚			

See notes on next page.

TABLE II. Plug interface dimensions - Continued.

1/ Dimensions are given in mm. NOTE: Inch measurements are provided for reference and as a result of rounding, inaccuracies could prevent intermateaility.
2/ Any value greater than zero must be resilient material, compressible to be coincident with ZZ when mated.
3/ Focal length is analytically derived through optical modeling (ZEMAX or equivalent).
4/ For aluminum.

REQUIREMENTS:

Dimensions required for intermateability: See figures 2 through 6 and tables I and II. Features not defined do not directly impact intermateability.

Materials: See table III. All materials must meet nuclear, biological, and chemical decontamination requirements described herein.

TABLE III. Materials 1/.

Part description	Material	Finish 2/
Insert body	ARCAP AP1D, 303 SS or ATI 2205	Passivated when 303 SS is selected
Alignment pin	316 stainless steel	Passivated
Facial seal	Fluorosilicone rubber 3/	None
Front housing	Aluminum 6082-T6, 6061-T6 or 2042 as long as T3 or T4 is not used	Teflon impregnated hard anodize or hard anodize; reference MIL-A-8625 type III 4/
Connector shell	Aluminum 6082-T6, 6061-T6 or 2042 as long as T3 or T4 is not used	Hard anodize in accordance with MIL-A-8625 type III
Coupling nut body	Aluminum 6082-T6, 6061-T6 or 2042 as long as T3 or T4 is not used	Hard anodize in accordance with MIL-A-8625 type III
Coupling nut grip 5/, 6/	Coupling nut body material or Fluorosilicone rubber	None
Strain relief boot	Fluorosilicone rubber	None
Protective cap 5/	Nylon, Aluminium 6082-T6, 6061-T6 or 2042 as long as T3 or T4 is not used	For aluminum, hard anodize in accordance with MIL-A-8625 type III
Lanyard	Nylon over galvanized steel or stainless steel stranded wire	N/A

See notes on next page.

TABLE III. Materials - Continued.

1/ All materials and plating must meet material compatibility requirements of MIL-STD-889 for the connector body material.
2/ All finishes must meet the color requirements and pass all environmental requirements.
3/ Material optional, provided all performance requirements are met.
4/ Provided performance requirements are met.
5/ Grip features are required on the coupling nut and protective cap and shall provide for sufficient hand grip to facilitate coupling and uncoupling.
6/ Aluminum is acceptable for coupling nut body material.

Epoxy: Epoxy is not furnished with the connector. When used, epoxy shall meet the requirements of MIL-DTL-83526. Cure according to manufacturer's recommended time and temperature profile.

Threads: Applicable, except that the separable interface coupling mechanism shall employ a modified metric trapezoidal thread as detailed in figure 2.

Lanyard: Lanyard length to be minimum necessary to facilitate easy installation and removal of the protective cap. Lanyard shall not be attached to the coupling nut. Lanyard coating must meet nuclear, biological, and chemical decontamination requirements as described herein.

Termini: Termini are not exposed at the separable interface and may be unique in design between manufacturers provided all performance requirements are met.

Protective cap: Protective cap shall:

a. Mate with the connector and with protective caps.

b. Pass crush test when mated with a connector and when mated with another protective cap.

c. Pass the impact test when mated with a connector.

Cable service loop: Provision for cable service loop is not required.

Tools: Tools are not supplied with the connector, but shall be available from the manufacturer.

Thread lubricant: Thread lubricants used in the construction of the connectors shall satisfy the following criteria:

a. Lubricants shall be permanent and shall not require replacement during the lifetime (see mating durability) of the connector.

b. Lubricants shall not migrate to the optical interfaces resulting in the degradation of optical performance.

c. Lubricants shall be useful over the environmental conditions specified herein.

d. Lubricants shall not be affected by cleaning solvents.

Wherever MIL-PRF-83526 specifies “change in insertion loss”, change in optical transmittance shall be measured and recorded.

Qualification inspection insertion loss: Applicable except the average insertion loss for each individual channel for initial insertion loss shall be no greater than 1.5 dB for multimode and 2.0 dB for single mode. One average per channel shall be recorded. Under all conditions the maximum insertion loss for each individual channel shall be 2.0 dB for multimode and 2.5 dB for single mode.

Discontinuities: Applicable, except testing shall be in accordance with TIA-455-32 test condition A. A discontinuity shall be a reduction of strength of 0.5 dB or more for a duration of 1 µs or more.

Crosstalk: Applicable, except test in accordance with TIA-455-42, with -60 dB maximum.

Return loss: Applicable for single mode only. The return loss of any single mode mated pair of connectors shall be not less than 31 dB for any channel and shall be not less than 34 dB for any unmated channel.

Focal length: Focal length shall be analytically derived through optical modeling (ZEMAX or equivalent) and shall be within the limits specified in table IV.

TABLE IV. Focal length.

Mode	Focal length mm	
	Min	Max
SM	1.5	1.7
MM	1.5	1.7

Weight: 453.6 grams (16 ounces) maximum.

Color: Non-reflective brown, non-reflective green, non-reflective black and non-reflective grey camouflages are acceptable colors. Cadmium is not permitted. No color is specified for the insert.

Fiber optic cable requirements: Shall be in accordance with MIL-PRF-85045/8, or equivalent approved by QPL activity.

Identification marking:

PIN construction: M 83526 / 20 - XX

Military designator

Basic specification

Specification sheet

Connector configuration, see table V

PIN shall be applied to the coupling nut (see figure 1).

Identify channels on both ends of the inserts (see figures 5 and 6).

Yellow indicator band: Shall be applied to the connector shell in the area between the lanyard attachment groove and the strain relief boot.

Yellow indicator band color: Yellow indicator band color shall be in accordance with EIA-359.

“Fiber-Optics” phrase: Shall be applied to the coupling nut group area as shown in figure 1.

TABLE V. Connector configuration.

83526/20-XX	Channels	Fiber cladding size	Figure	Wavelength ± 30 nm	Mode
-01	4	125	5	850/1,300 nm	Multi
-02	4	125	5	1,310 nm	Single
-03	4	125	5	1,550 nm	Single
-04	2	125	6	850/1,300 nm	Multi
-05	2	125	6	1,310 nm	Single
-06	2	125	6	1,550 nm	Single

Channel location identification: Same as terminus location identification requirement, except location marking shall be adjacent to lens (see figures 5 and 6).

Lens cleaning: Each lens shall be cleaned in accordance with instructions supplied by the connector manufacturer. The lens shall not be removed from its operational position within the connector to facilitate cleaning. After cleaning, the identification marking requirements shall be met; also the requirements of insertion loss shall be met before and after the test.

Insert retention axial strength: Applicable with the exception that the force shall be applied to front (lens) side of insert only. The requirements of insertion loss shall be met after the test only.

Insert retention radial strength: Applicable with the exception that the torque of 3.4 N m (30 inch pounds) shall be applied between the shell body and the insert utilizing the guide pin and guide pin hole of the insert. The requirements of insertion loss shall be met after the test only.

Terminus retention force: Not applicable.

Terminus insertion and removal forces: Not applicable.

Maintenance aging: Not applicable.

Coupling force: Coupling force shall be 1 kg (2.2 lb) maximum.

Coupling torque: 5 N-m (44.3 inch-pounds) maximum.

Cable seal flexing: Cable seal flexing is applicable except the insertion loss shall be measured before and after the test

Temperature requirements: (Unless stated otherwise, tests are to be performed under worst case scenario (85º C). Temperature information below is for user):

Operating temperature range: -46°C to 71°C (-51°F to 160°F).

Transit temperature range: -54°C to 71°C (-65°F to 160°F).

Storage temperature range: -57°C to 85°C (-70°F to 185°F).

Temperature life: Applicable except the optical requirements apply before and after the test only.

Mating durability: Applicable except after 1,000 cycles, the connector shall show no defects detrimental to the operation of the connector and shall pass mating forces and coupling torques tests. After an additional 2,000 cycles, the connector shall pass the insertion loss test. Insertion loss shall be measured every 100 mating cycles during the test.

Impact: Applicable, except test in accordance with TIA-455-2, method C, service class Severe.

Cable retention: Applicable except, the load applied shall equal the load of the cable tensile loading and elongation of the test cable used for qualification and the change in optical transmittance shall be measured after releasing the load

Crush resistance: Applicable, except the test load shall be 6.7 kN (1506 lbf) and the hold time shall be 5 seconds minimum for plug to plug configuration. For plug to cap and cap to cap crush resistance test, load shall be 2.7 kN (450 lbf).

External bending moment: Applicable, except that the applied load shall be 30 N-m (22 lbf ft) and the application rate shall be 21 N (4.7 lbf) per second.

External bending moment (mated connectors): In addition to the requirements of MIL-DTL-83526, one pair of mated cable plug connectors shall be placed on 2 cylinders each located 15 mm (.6 inches) from the outer end of the mechanical edge of the connectors. A 1,000 N (224.8 pound) force shall be applied via a flat plate at the interface plane of the connectors, distributed over a 40 mm (1.6 inch) length. The force shall be applied at a rate of 50 N (11.2 pound) per minute (see figure 7). Insertion loss of each optical path shall be measured before, during, and after the test.

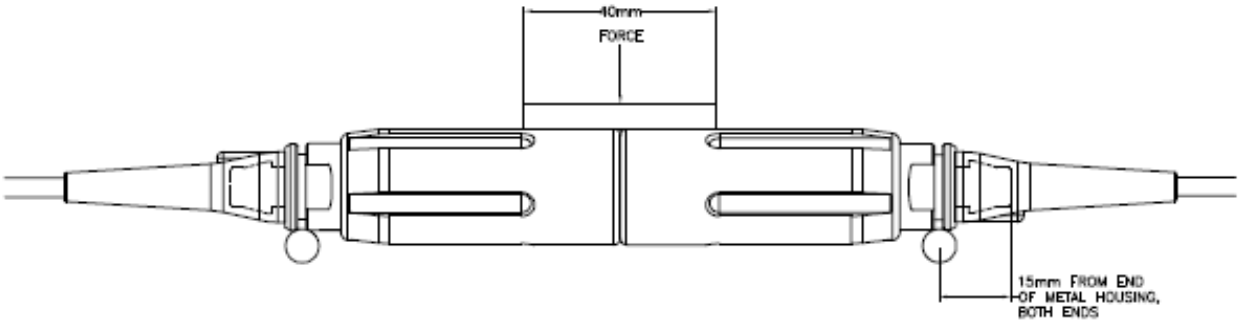

FIGURE 7. Plug to plug external bending moment test (matted connectors).

Thermal shock: Applicable, except test in accordance with TIA-455-71, schedule C for 10 cycles, with high and low test temperatures of +85°C and -57°C, respectively. Insertion loss shall be measured before and after the test.

Physical shock: Applicable, except test condition A shall be utilized.

Salt spray: Applicable in accordance with TIA-455-16, test condition C.

Fungus resistance: Applicable in accordance with basic document (MIL-DTL-83526). Following the test, examination of the test samples shall reveal no evidence of deterioration of component parts or constituent materials that will adversely affect performance.

Water immersion: Water immersion test shall be performed in accordance with TIA-455-74 at a depth of 15 m (590.5 inches) for a duration of 24 hours. Only in-line plug connectors mated to each other shall be tested for insertion loss. Both the plug to plug and plug to receptacle configurations shall be examined for evidence of moisture penetration.

Flammability: Flammability is not applicable.

Sample size: Eight mated pair of cable plug connectors with sufficient mating connectors to test.

Assembly instructions: Assembly instructions shall include:

a. Cable preparation-stripping dimensions and tolerances.

b. Military PIN and manufacturer's part number.

c. Lens cleaning procedures.

d. List and description of crimping or special tools required.

e. Sufficient pertinent dimensions for verification of correct parts; as minimum the entry openings shall be specified.

f. Any polishing requirements and fiber preparation requirements.

Conformance and periodic inspection:

Conformance inspection sample unit preparation: Applicable, except in cases where no MIL-PRF-85045 qualified sources exist, cable shall be specified by the qualifying activity (mailto:vqp.chief@dla.mil).

QUALIFICATION INSPECTION

Qualification inspection sample size: Applicable, except the following minimum test samples shall be provided for each connector series:

Eight in-line connectors with appropriate mating connectors to facilitate testing.

Lens scratch resistance: Lenses shall have a surface quality of 60 -40 and shall pass the scratch and dig requirement of MIL-PRF-13830.

Intermateability and interoperability tests apply, with the following additional requirements:

Units shall mate and perform with standards maintained by the qualifying activity.

The intermateability and interoperability sample shall be configured per figure 8.

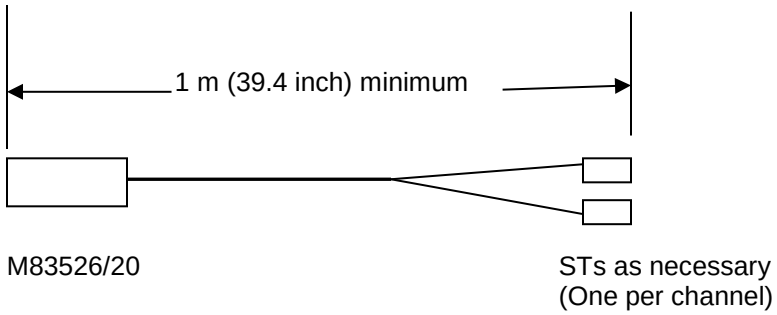

FIGURE 8. Intermateability and interoperability sample.

Nuclear, biological, and chemical decontamination: Nuclear, biological and chemical decontamination requirement as part of group II following crush test and shall be demonstrated through the following:

a. As a guide for design and material considerations, chapter 5 of MIL-HDBK-783 may be used.

b. To verify wash down capability, with a connector and cable assembly connected to a receptacle (M83526/21) mounted on a panel, there shall be no leak when washed down utilizing a wide angle nozzle no closer than three (3) feet at 45 psi (for additional information see MIL-STD-108 table II spray tight). Upon uncoupling the connector and receptacle, there shall be no evidence of moisture inside the seal area.

Electromagnetic shielding: Electromagnetic shielding testing of plugs mated to qualified receptacles shall be conducted as follows: The test specimens (including terminated cable) shall be tested to determine the propagation characteristics (attenuation or conduction) of the specimen assembly. The shielding effectiveness of a shielded enclosure shall be verified in accordance with the procedures specified in IEEE-299 at the discrete frequencies specified in table V with the test specimen mounted in position. The qualified receptacle shall be mounted into the wall (panel) of the shielded enclosure such that the plug mates from the inside of the shielded enclosure. The cable(s) from the plug and receptacle shall be extended parallel to the test specimen for a minimum of 2 meters on each side of the enclosure wall (panel). The dynamic range of the test setup shall be measured as specified in IEEE-299 at each discrete frequency specified in table VI. The measured level of radio frequency (RF) propagation through the test specimen installed in the shielded enclosure shall be determined in accordance with the procedures specified in IEEE-299 at each discrete frequency specified in table VI.

TABLE VI. Electromagnetic shielding test frequencies.

Field propagation	Test frequencies
H Field	150 kHz 14 MHz
Plane wave	400 MHz 1 GHz
Microwave	10 GHz

Antenna placement. Antenna types and placement distances shall conform to table VII and table VIII respectively. Matched antennas shall be used for each measurement. Placement distances are specified in IEEE-299 for both antennas to test specimen connectors and the wall (panel) of the shielded enclosure. The transmitting antenna shall be oriented in both the parallel (horizontal) and perpendicular (vertical) directions for each frequency listed in table VI. Energy from the transmitting antenna shall be maximized by positioning the antenna parallel along the test specimen cable length and perpendicular along the test specimen cable circumference. The sensitivity of the receiving antenna shall be maximized by measuring both end view and side (length) view with a constant rotation between the horizontal and vertical antenna positions. For plane wave measurements in the perpendicular direction, the transmit antenna shall be 1 meter above the test specimen cable.

TABLE VII. Antenna types.

Field propagation	Antenna type
H field	Horn
Plane wave	Log periodic or dipole
Microwave	Horn

TABLE VIII. Antenna placement distances. 1/

Location	Placement
Receiving antenna to test specimen cable	5 cm
Transmitting antenna to test specimen cable	1 m
Transmitting antenna to shielded enclosure	2 m

1/ Extended dipole antenna distance measurements shall be made from the center of the antenna elements.

When tested, the propagated radio frequency (RF) attenuation of the connector shall be not less than 60 dB for frequencies not greater than 10 GHz.

QUALIFICATION BY SIMILARITY

Qualified SM, 4 channel, 1310 nm wavelength connector:

Manufacturers who are qualified under this specification sheet for single mode four channel connectors at 1310 nm wavelength and pass the tests/inspections specified in table IX are qualified by similarity for the configurations specified in table IX.

TABLE IX. Qualification by similarity, SM 4 channel to other configurations 1/, 2.

Channels	4	2	2	4	2
Wavelength	1550	1310	1550	850/1300	850/1300
Mode	Single	Single	Single	Multi	Multi
Inspections/tests 1/					
Group I					
(all sample units)					
(all tests shall be performed)	X	X	X	X	X
Return loss 3/	X	X	X	X	X
Group III					
(2 sample units)					
Thermal shock	X			X	X 4/
Physical shock	X			X	X 4/
Vibration	X			X	X 4/
Group IV					
(2 sample units)					
Humidity	X			X	X 4/
Group V					
(2 sample units)					
Intermateability and interoperability	X	X	X	X	X

See notes at end of table.

TABLE IX. Qualification by similarity, SM 4 channel to other configurations. Continued

1/ Single mode, 4 channel, 1310 nm wavelength connector already qualified.
2/ X indicates the test applies.
3/ Return loss test to be performed on all sample units as part of group I.
4/ Test may be omitted if multimode 4 channel product is already qualified.

Qualified multimode connector and candidate single mode connector:

Manufacturers, who are qualified under this specification sheet for multimode connector (4 channel and 2 channels) and pass the additional tests/inspections in table X, are qualified by similarity for single mode connectors (4 channels and 2 channels).

TABLE X. Qualification by similarity, (qualified multimode and candidate single mode).

Group I (all tests)
Discontinuities
Temperature life
Insertion loss
Return loss
Crosstalk
Vibration
Humidity
Physical shock
External bending moment
Thermal shock
Mating durability

Qualified 2 channel connector does not qualify a 4 channel connector.

TABLE XI. Group A Inspection.

Inspection	Requirement paragraph	Test paragraph
Workmanship	3.13 of MIL-DTL-83526	4.9.32 of MIL-DTL-83526
Identification marking	3.11.4 and MIL-DTL-83526/20	4.9.4 and MIL-DTL-83526/20
Critical examinations	As specified in MIL-DTL-83526/20	As specified in MIL-DTL-83526/20

Critical examinations (Group A inspection). Critical examinations shall be performed on 100 percent of the product produced for delivery, and shall consist of the following tests:

- Conformance inspection insertion loss. When measured in accordance with TIA/EIA-455-171 method D1 (multimode) or TIA/EIA-455-171 method D3 (singlemode), the maximum per channel insertion loss shall be 1.5dB for singlemode and 1.3dB for multimode.
- Return loss (single mode only)
- Mating threads PX and PY

TABLE XII. Group B inspection.

Inspection	Requirement paragraph	Test paragraph
Coupling force	MIL-DTL-83526/20	MIL-DTL-83526/20
Coupling torque	MIL-DTL-83526/20	MIL-DTL-83526/20
Insert retention axial strength	MIL-DTL-83526/20	MIL-DTL-83526/20
Insert retention radial strength	MIL-DTL-83526/20	MIL-DTL-83526/20

TABLE XIII. Group C inspection.

Inspection	Requirement paragraph	Test paragraph
Group I (4 mated pair)		
Insertion loss	MIL-STD-83526/20	MIL-STD-83526/20
Group II (2mated pair)		
Twist	MIL-DTL-83526 (see 3.11.15)	MIL-DTL-83526 (see 4.9.15)
Cable seal flexing	MIL-DTL-83526/20	MIL-DTL-83526/20
Cable retention	MIL-DTL-83526/20	MIL-DTL-83526/20
External bending moment	MIL-DTL-83526/20	MIL-DTL-83526/20
Thermal shock	MIL-DTL-83526/20	MIL-DTL-83526/20
Water Pressure/Freezing	MIL-DTL-83526 (see 3.11.28) and MIL-DTL-83526/20	MIL-DTL-83526 (see 4.9.28) and MIL-DTL-83526/20
Physical shock	MIL-DTL-83526/20	MIL-DTL-83526/20
Vibration	MIL-DTL-83526 (see 3.11.23)	MIL-DTL-83526 (see 4.9.23)
Group III (2 mated pair)		
Mating durability	MIL-DTL-83526/20	MIL-DTL-83526/20
Humidity	MIL-DTL-83526 (see 3.11.24)	MIL-DTL-83526 (see 4.9.24)
Salt spray	MIL-DTL-83526/20	MIL-DTL-83526/20
Sand and dust	MIL-DTL-83526 (see 3.11.29)	MIL-DTL-83526 (see 4.9.29)
Impact	MIL-DTL-83526/20	MIL-DTL-83526/20

Referenced documents. In addition to MIL-DTL-83526, this specification sheet references the following documents:

MIL-A-8625	MIL-STD-108	TIA-455-16
MIL-HDBK-783	MIL-STD-889	TIA-455-32
MIL-PRF-13830	EIA-359	TIA-455-42
MIL-PRF-85045	IEEE-299	TIA-455-71
MIL-PRF-85045/8	ISO 2903	TIA-455-74
	TIA-455-2	TIA/EIA-455-171

Amendment notations. The margins of this specification are marked with vertical lines to indicate modifications generated by this amendment. This was done as a convenience only and the Government assumes no liability whatsoever for any inaccuracies in these notations. Bidders and contractors are cautioned to evaluate the requirements of this document based on the entire content irrespective of the marginal notations.

CONCLUDING MATERIAL

Custodians:
Army - CR
Navy - AS
Air Force -85
DLA – CC

Review activities:
Air Force - 13, 19, 93, 99
NASA - NA

Preparing activity:
DLA – CC

(Project 6060-2015-004)

NOTE: The activities listed above were interested in this document as of the date of this document. Since organizations and responsibilities can change, you should verify the currency of the information above using the ASSIST Online database at https://assist.dla.mil.