[INCH-POUND]

MIL-M-83521/7
17 November 1989
SUPERSEDING
MIL-T-83507/9
15 November 1977

MILITARY SPECIFICATION SHEET

MAINTENANCE KITS, ELECTRICAL CONNECTORS, CONTACTS, AND CONNECTOR AND CABLE ACCESSORIES: MAINTENANCE KIT GENERAL PURPOSE, FOR MIL-C-22520/5 CRIMPING TOOL AND DIES

This specification sheet is approved for use by all Departments and Agencies of the Department of Defense.

The requirements for acquiring the product described herein shall consist of this specification sheet and the issue of the following specification listed in that issue of the Department of Defense Index of Specifications and Standards (DODISS) specified in the solicitation: MIL-M-83521.

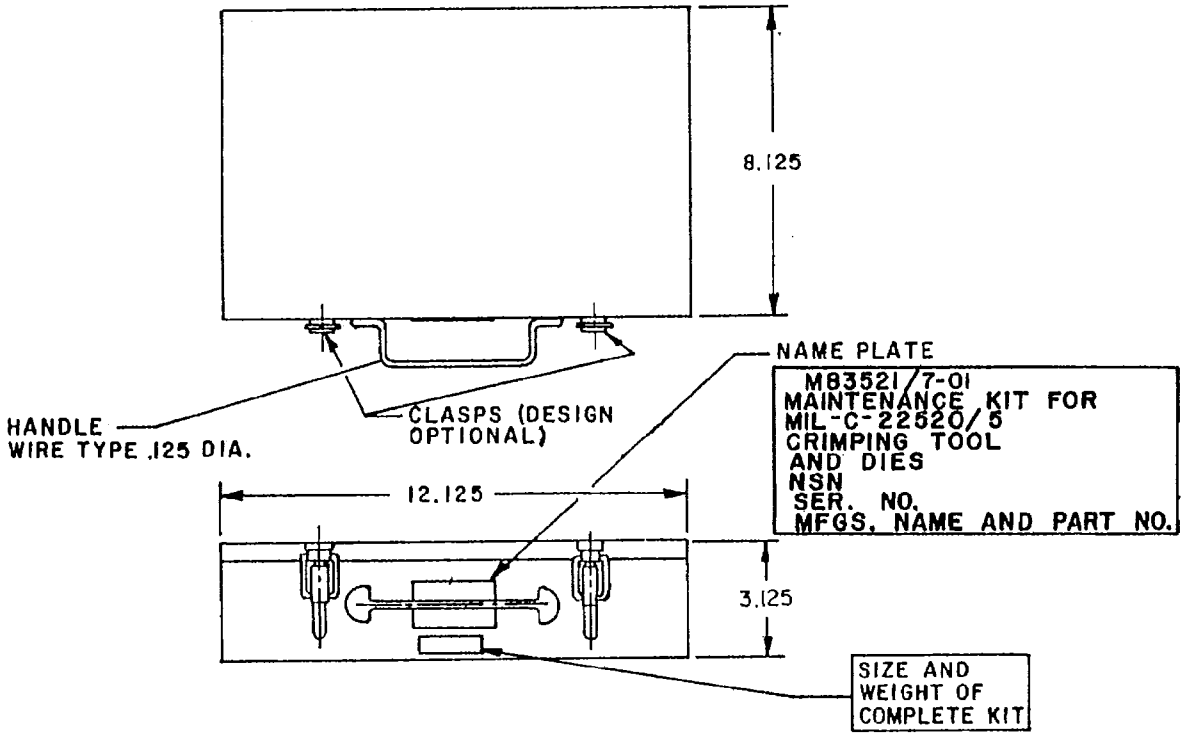

NOTES:
1. For drawing notes and metric equivalents, see figure 6.
2. The PIN M83521/7-01 includes case and tools.

FIGURE 1. Maintenance kit, for MIL-C-22520/5 crimping tool and dies.

AMSC N/A
FSC 5935

DISTRIBUTION STATEMENT A. Approved for public release; distribution is unlimited.

Parts list

(1)	M83521/7-02 or 03	-	Tool case assembly.
(1)	M22520/5-01	-	Crimp tool frame.
(1)	M22520/5-03	-	Die set.
(1)	M22520/5-04	-	Die set.
(1)	M22520/5-05	-	Die set.
(1)	M22520/5-06	-	Die set.
(1)	M22520/5-07	-	Die set.
(1)	M22520/5-08	-	Die set.
(1)	M22520/5-10	-	Die set.
(1)	M22520/5-17	-	Die set.
(1)	M22520/5-19	-	Die set.
(1)	M22520/5-21	-	Die set.
(1)	M22520/5-23	-	Die set.
(1)	M22520/5-27	-	Die set.
(1)	M22520/5-31	-	Die set.
(1)	M22520/5-33	-	Die set.
(1)	M22520/5-35	-	Die set.
(1)	M22520/5-37	-	Die set.
(1)	M22520/5-39	-	Die set.
(1)	M22520/5-41	-	Die set.
(1)	M22520/5-43	-	Die set.
(1)	M22520/5-45	-	Die set.
(1)	M22520/5-47	-	Die set.
(1)	M22520/5-49	-	Die set.
(1)	M22520/5-51	-	Die set.
(1)	M22520/5-53	-	Die set.
(1)	M22520/5-55	-	Die set.
(1)	M22520/5-61	-	Die set.
(1)	M22520/5-63	-	Die set.

(1) GGGC105, type 1, class 1, style 1A, size 1 inch caliper, micrometer.

(1 set) contents charts, instruction sheets, and tool selection chart.

FIGURE 1. Maintenance kit, for MIL-C-22520/5 crimping tool and dies - Continued.

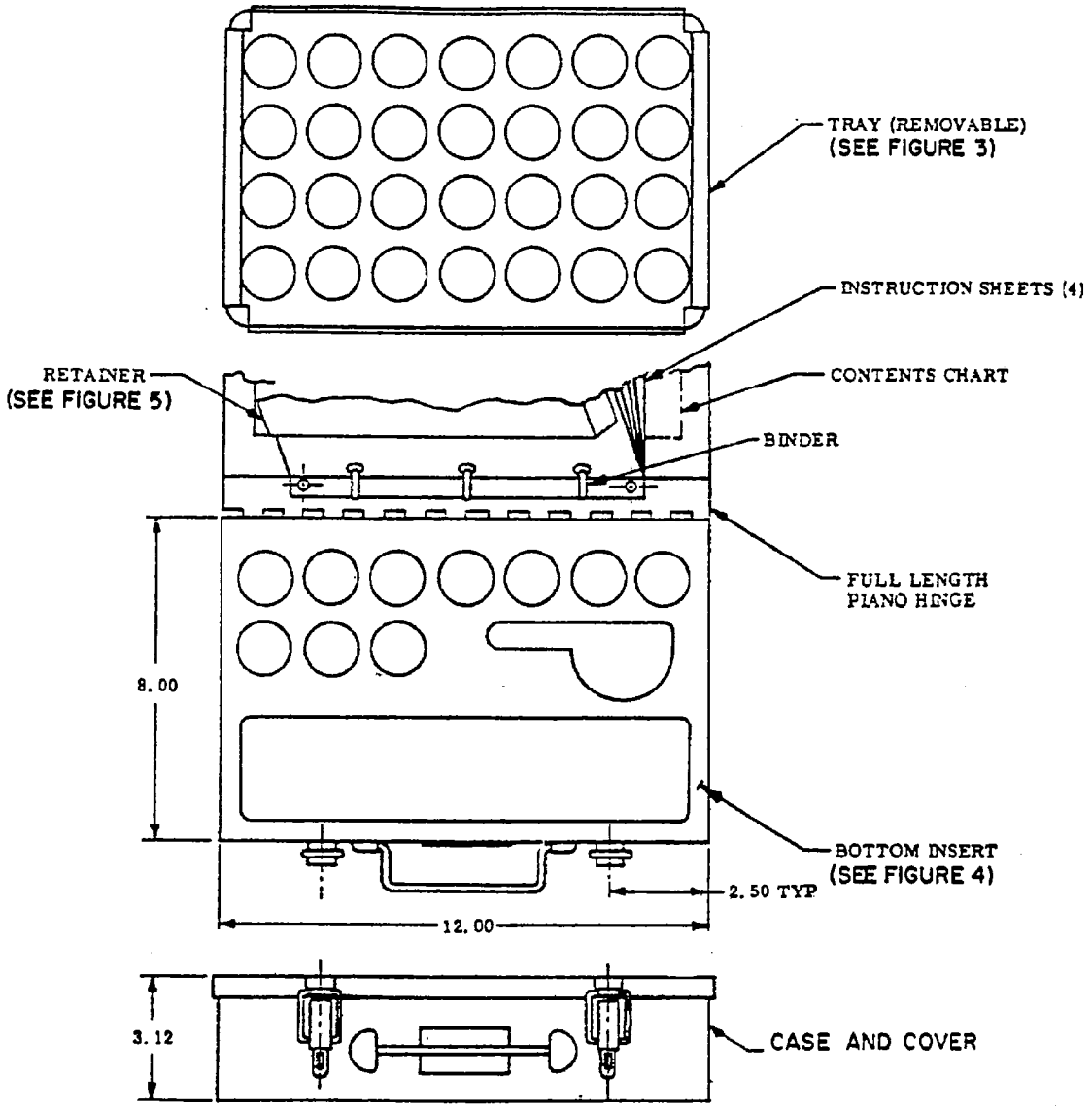

NOTES:
1. See figures 6 and 4.
2. The PIN M83521/7-02 for case only (tools not included).
3. The PIN M83521/7-03 for yellow case only (tools not included).

FIGURE 2. Tool case assembly.

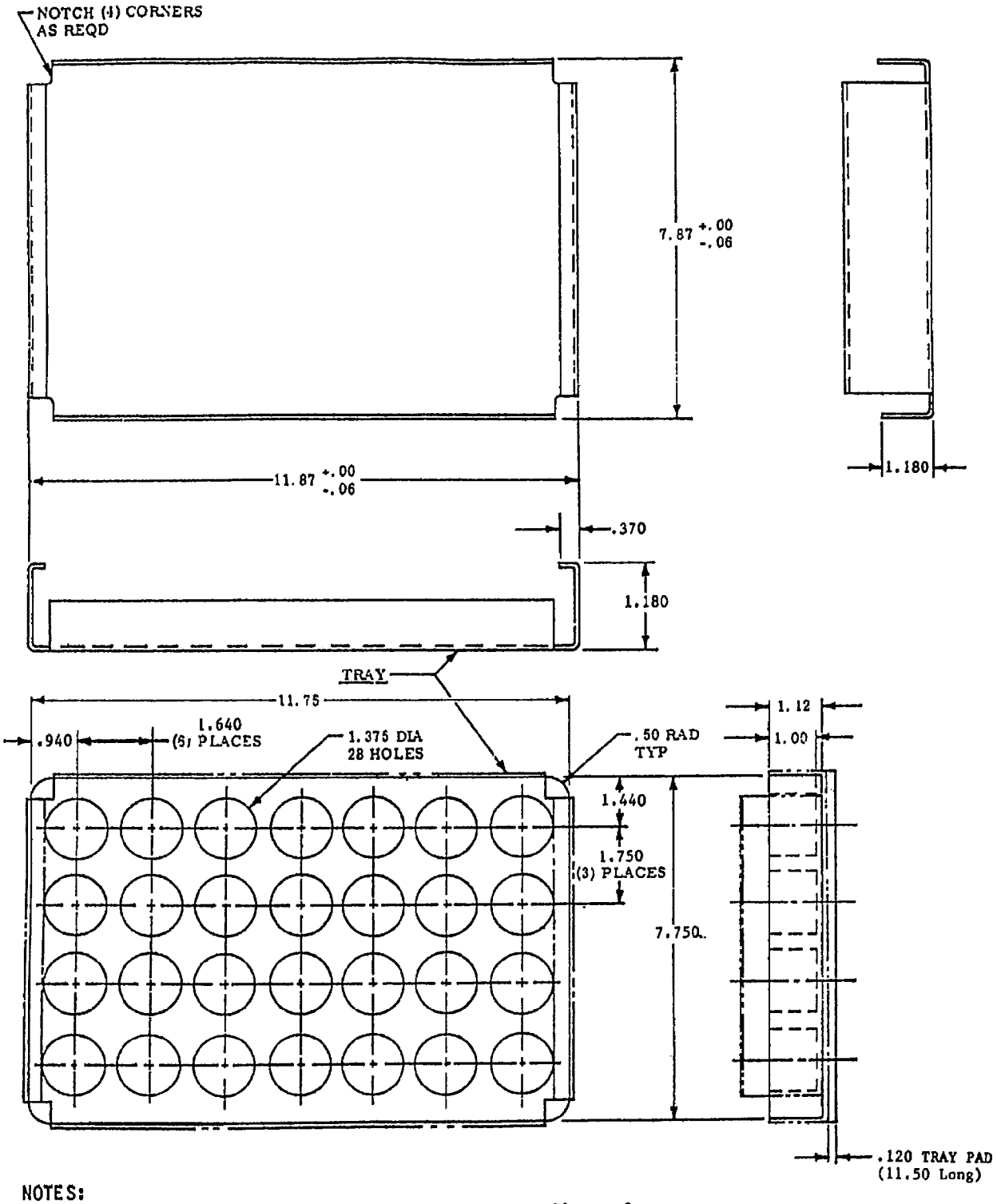

NOTES:
1. For drawing notes and metric equivalents, see figure 6.
2. This insert is part of the tool case assembly (see figure 2).

FIGURE 3. Tray insert configuration.

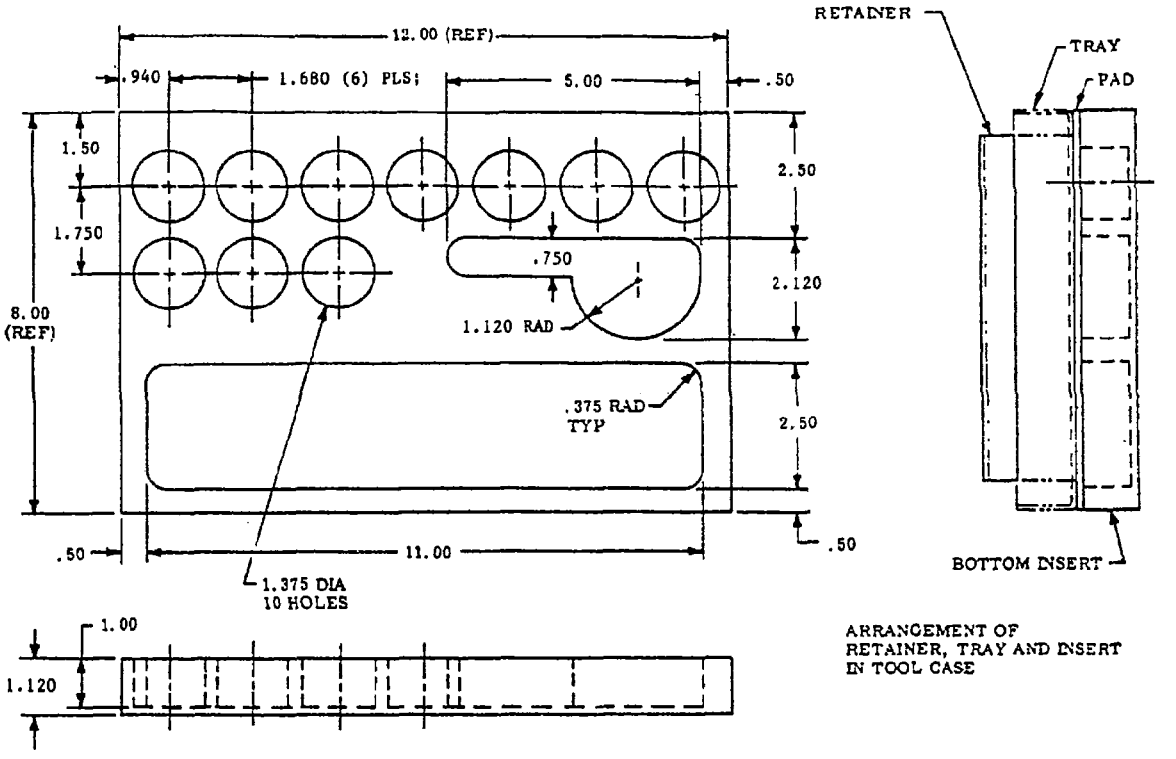

NOTES:
1. For drawing notes and metric equivalents, see figure 6.
2. This insert is part of the tool case assembly (see figure 2).

FIGURE 4. Bottom insert configuration.

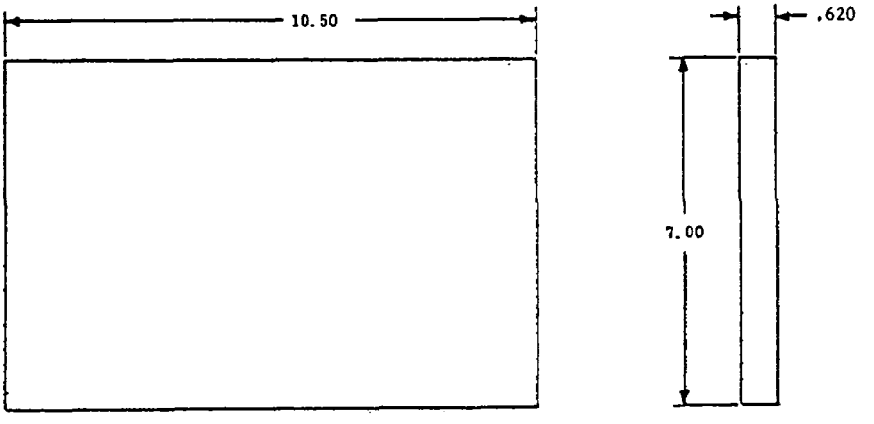

NOTES:
1. For drawing notes and metric equivalents, see figure 6.
2. This retainer is part of the tool case assembly (see figure 2).

FIGURE 5. Retainer configuration.

Inches	mm	Inches	mm	Inches	mm	Inches	mm
.06	1.5	1.120	28.4	2.50	63.5	8.125	206.38
.12	3.0	1.180	30.0	2.75	69.8	10.00	254.0
.125	3.18	1.375	34.92	3.12	79.2	10.50	266.7
.370	9.4	1.440	36.6	3.125	79.38	11.00	279.4
.375	9.52	1.50	38.1	5.00	127.0	11.50	292.1
.50	12.7	1.64	41.7	6.00	152.4	11.75	298.4
.62	15.7	1.68	42.7	7.00	177.8	11.87	301.5
.750	19.0	1.750	44.4	7.750	196.8	12.00	304.8
.94	23.9	1.810	46.0	7.87	199.9	12.125	308.0
1.00	25.4	2.120	53.8	8.00	203.2		

NOTES:
1. Dimensions are in inches.
2. Metric equivalents are given for general information only.
3. Unless otherwise specified, tolerance is ±.031 (.79 mm).
4. Remove all burrs, break sharp edges and corners.

FIGURE 6. Drawing notes and metric equivalents.

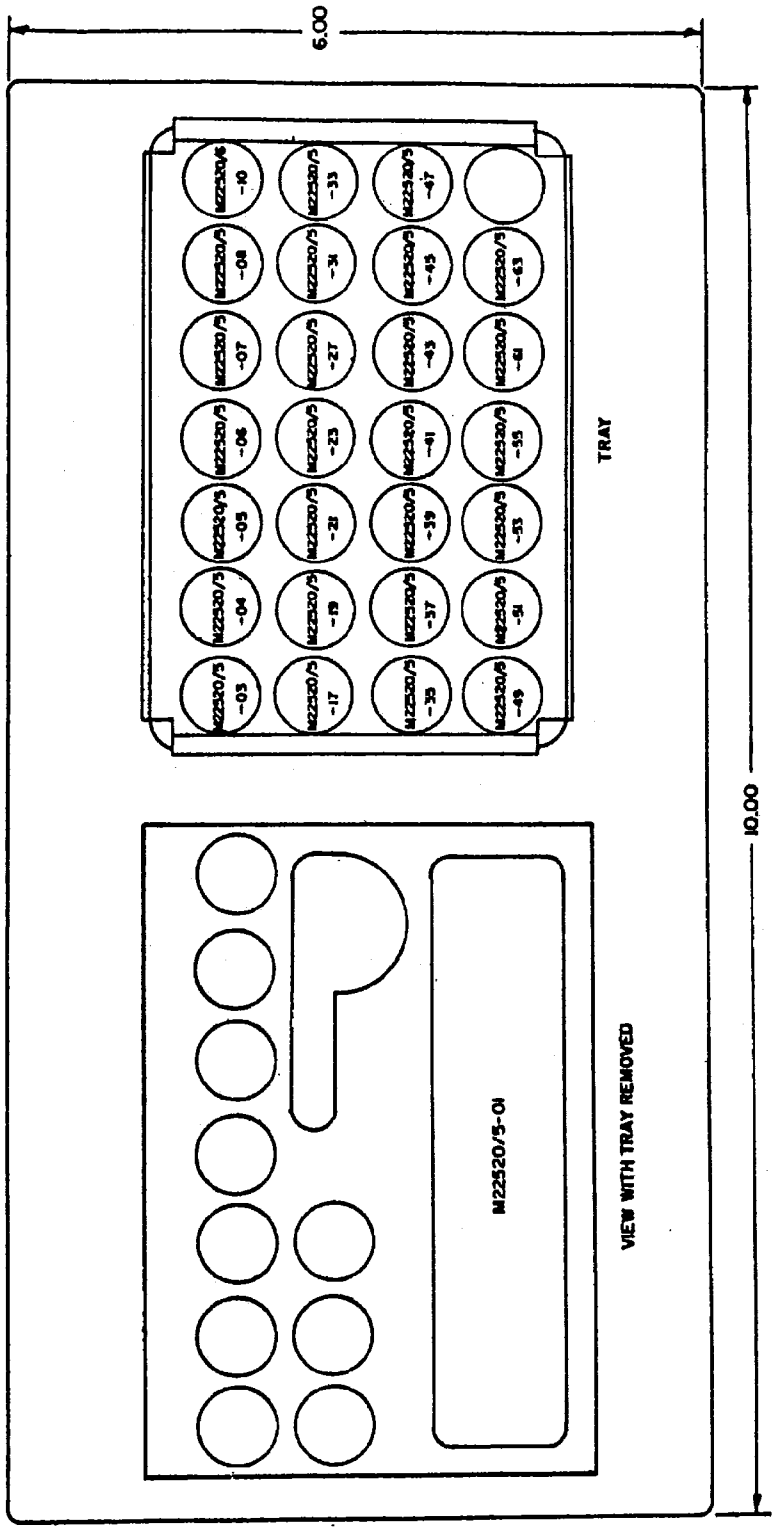

Contents chart

FIGURE 7. Contents charts.

Instruction sheets are as follows:

Instructions for inserting and removing dies

1. Tool must be in open position. Place stationary die in position and push. Die will snap into lock position.

2. Place moveable die into position and push. Cycle tool to insure that both both dies are properly seated.

3. To remove moveable die, place die removal pin between back edge of moveable die and body. Open handle with a ligh snap. This will disengage moveable die which can then be removed by hand.

4. To remove stationary die, place die removal pin against end of knock out pin as shown and tap lightly. This will disengage die which can then be removed by hand.

NOTE Dies are not interchangeable. They can be inserted in one position only because of keyway on bottom surface.

Installation method of shield termination ferrules

1. Slip outer ferrule over outer insulation. After stripping, trim braid to within .50" of insulation.

2. Fan braid by rotating center conductor and slip inner ferrule under braid.

3. Position inner ferrule to extend about .062" beyond braid.

4. Slip ground lead under outer ferrule (front or back) and slide outer ferrule over braid.

5. Outer ferrule covers all exposed strands.

6. Compress in specified tool (dies will not release until full compression stroke is completed. Die stops prevent over-compression).

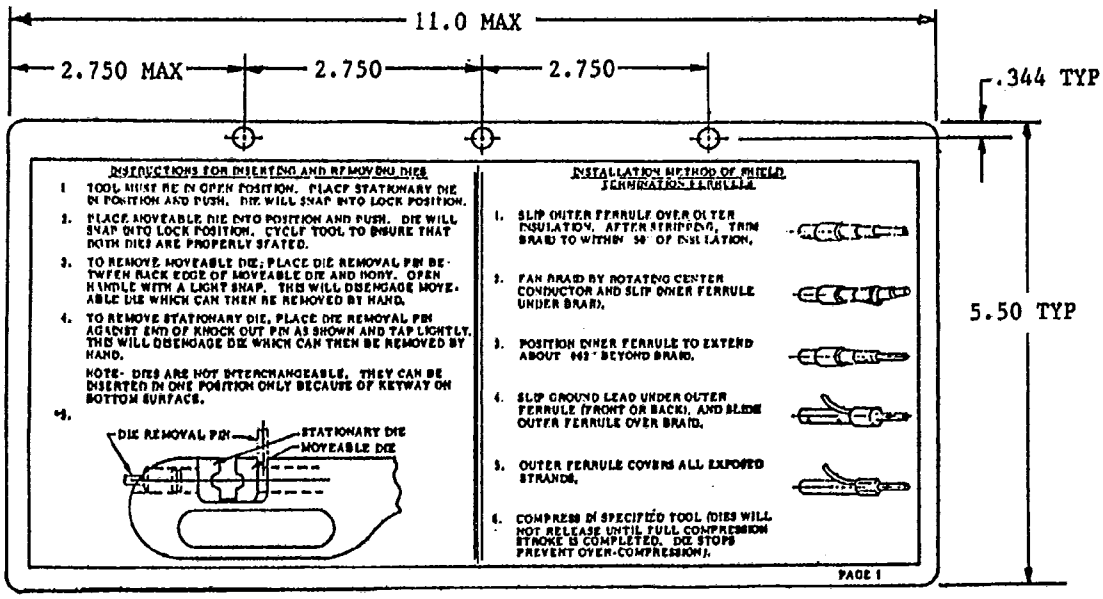

*5 Dies are free floating and will align during crimping procedure.

NOTE: Dimensions apply to all instruction sheets.

FIGURE 8. Instruction sheets.

Assembly instructions for shielded pin and socket contacts.

Step 1

Install sealing boot and slide outer ferrule onto cable, as shown, prior to stripping cable.

Step 2

Strip cable jacket, braid, and dielectric to dimensions indicated. All cuts are to be square and sharp. Important: Do not nick braid, dielectric, or center conductor when cutting. If wire ends of center conductor fray, twist them to their normal lay.

Step 3

Place stripped center conductor into contact until cable dielectric butts contact and end of wire shows through inspection hole (arrow). Insert contact into crimp tool until fully seated in nest bushing. Crimp with one full stroke.

Step 4

Flare out ends of wire braid to facilitate insertion of inner ferrule of body assembly (do not comb out wire braid).

Step 5

Install center contact in body assembly and slide inner ferrule underneath wire braid as shown. Center contact shall be inserted until it is locked in place in body assembly. A 3 pound minimum, 5 pound maximum pull shall be exerted on cable to ensure that the contact is securely locked in place.

Step 6

Slide outer ferrule over wire braid and up against body assembly as shown. No slack shall exist in wire braid. Crimp outer ferrule with M22520/5-39 (.160 hex).

Step 7

The shielded contact now assembled shall be inserted into the connector assembly with an insertion tool. Push sealing boot forward into grommet of connector until O-ring riser of the boot has effected its snap-in seal. The installation of the shielded contact is then completed. For removing contact from connector, use applicable removeable tool.

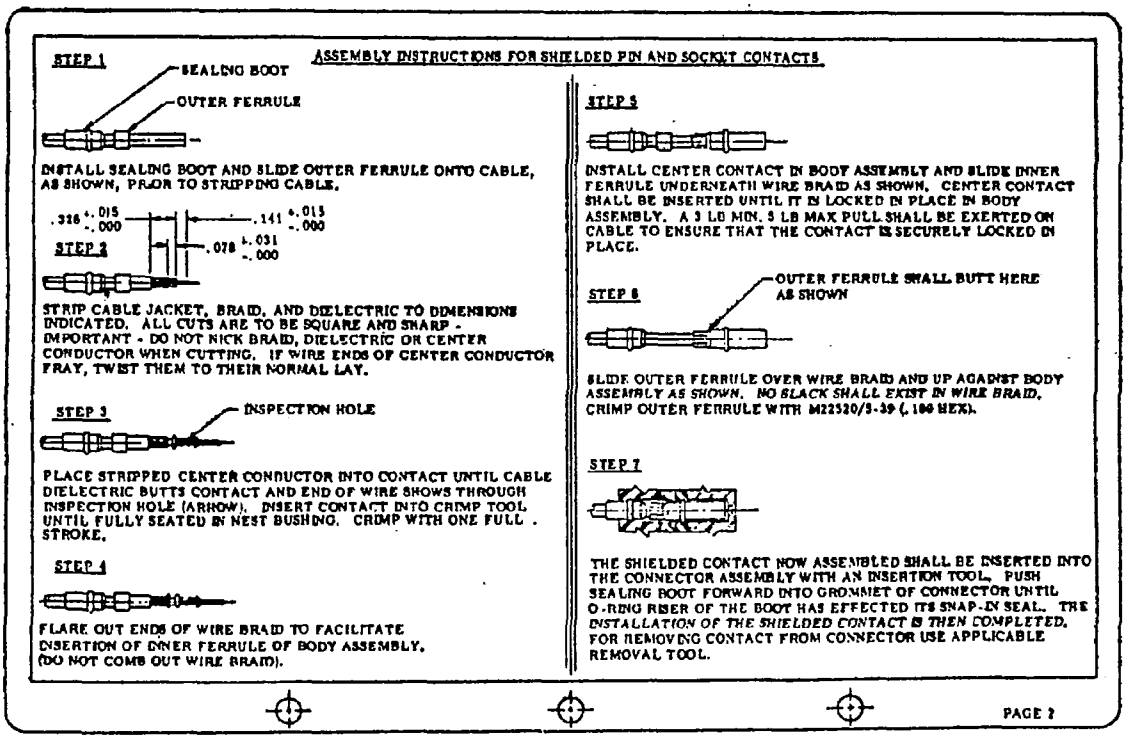

Instruction sheet.

FIGURE 8. Instruction sheets - Continued.

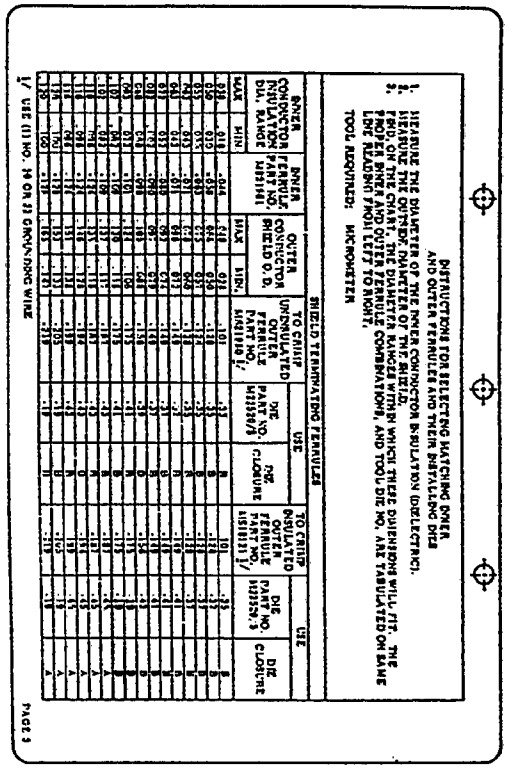

INSTRUCTIONS FOR SELECTING MATCHING INNER AND OUTER FERRULES AND THEIR INSTALLING DIES

1. MEASURE THE DIAMETER OF THE INNER CONDUCTOR INSULATION (DIELECTRIC).
2. MEASURE THE OUTSIDE DIAMETER OF THE SHIELD.
3. FIND, ON THE CHART, THE DIAMETER RANGES WITHIN WHICH THESE DIMENSIONS WILL FIT. THE PROPER INNER AND OUTER FERRULE COMBINATIONS, AND TOOL DIE NO. ARE TABULATED ON SAME LINE READING FROM LEFT TO RIGHT.

TOOL REQUIRED: MICROMETER

SHIELD TERMINATING FERRULES

INNER CONDUCTOR INSULATION DIA. RANGE		INNER FERRULE PART NO. MS21981	OUTER CONDUCTOR SHIELD O.D.		TO CRIMP UNINSULATED OUTER FERRULE PART NO. MS21980 1/	USE		TO CRIMP INSULATED OUTER FERRULE PART NO. MS18121 1/	USE	
MAX	MIN		MAX	MIN		DIE PART NO. M22520/5	DIE CLOSURE		DIE PART NO. M22520/5 5	DIE CLOSURE
.038	.018	-046	.048	.028	-101	-33	B	-101	-35	B
.050	.030	-058	.068	.050	-128	-35	B	-128	-37	B
.055	.035	-063	.075	.057	-128	-35	B	-128	-37	B
.063	.043	-071	.078	.060	-128	-35	B	-128	-37	B
.063	.043	-071	.096	.072	-149	-37	B	-149	-41	B
.072	.052	-080	.092	.074	-149	-37	B	-149	-41	B
.082	.062	-090	.097	.079	-149	-37	B	-149	-41	B
.088	.068	-096	.105	.088	-156	-39	B	-156	-43	B
.093	.073	-101	.124	.106	-175	-41	B	-175	-19	B
.102	.082	-109	.130	.118	-175	-41	B	-175	-19	B
.102	.082	-109	.137	.117	-187	-43	B	-187	-45	A
.116	.096	-124	.138	.118	-187	-43	B	-187	-45	A
.116	.096	-124	.146	.128	-194	-43	B	-194	-45	A
.116	.096	-124	.151	.138	-199	-43	B	-199	-45	A
.120	.100	-128	.153	.133	-205	-19	B	-205	-19	A
.120	.100	-128	.165	.147	-219	-19	B	-219	-19	A

1/ USE (1) NO. 14 OR 23 GROUNDING WIRE

PAGE 3

FIGURE 8. Instruction sheets - Continued.

Instructions for selecting matching inner and outer ferrules and their installing dies

1. Measure the diameter of the inner conductor insulation (dielectric).
2. Measure the outside diameter of the shield.
3. Find, on the chart, the diameter ranges within which these dimensions will fit. The proper inner and outer ferrule combinations, and tool die number are tabulated on same line reading from left to right.

Tool required: Micrometer

Shield terminating ferrules										
Inner conductor insulation dia. range		Inner ferrule PIN MS21981	Outer conductor shield O.D.		To crimp uninsulated outer ferrule PIN MS21980 1/	Use		To crimp insulated outer ferrule PIN MS18121 1/	Use	
Max	Min		Max	Min		Die PIN M22520/5	Die closure		Die PIN M22520/5 5	Die closure
.038	.018	-046	.048	.028	-101	-33	B	-101	-35	B
.050	.030	-058	.068	.050	-128	-35	B	-128	-37	B
.055	.035	-063	.075	.057	-128	-35	B	-128	-37	B
.063	.043	-071	.078	.060	-128	-35	B	-128	-37	B
.063	.043	-071	.096	.072	-149	-37	B	-149	-41	B
.072	.052	-080	.092	.074	-149	-37	B	-149	-41	B
.082	.062	-090	.097	.079	-149	-37	B	-149	-41	B
.088	.068	-096	.105	.088	-156	-39	B	-156	-43	B
.093	.073	-101	.124	.106	-175	-41	B	-175	-19	B
.102	.082	-109	.130	.118	-175	-41	B	-175	-19	B
.102	.082	-109	.137	.117	-187	-43	B	-187	-45	A
.116	.096	-124	.138	.118	-187	-43	B	-187	-45	A
.116	.096	-124	.146	.128	-194	-43	B	-194	-45	A
.116	.096	-124	.151	.138	-199	-43	B	-199	-45	A
.120	.100	-128	.153	.133	-205	-19	B	-205	-19	A
.120	.100	-128	.165	.147	-219	-19	B	-219	-19	A

1/ See footnote at end of figure.

Shield terminating ferrules (continued)										
Inner conductor insulation dia. range		Inner ferrule PIN MS21981	Outer conductor shield O.D.		To crimp uninsulated outer ferrule PIN MS21980 1/	Use		To crimp insulated outer ferrule PIN MS18121 1/	Use	
Max	Min		Max	Min		Die PIN M22520/5 5	Die closure		Die PIN M22520/5	Die closure
.126	.106	-134	.148	.128	-205	-19	B	-205	-19	A
.126	.106	-134	.168	.149	-225	-45	B	-225	-19	A
.126	.106	-134	.181	.162	-232	-45	A	-232	-43	A
.141	.121	-149	.171	.153	-232	-45	A	-232	-43	A
.148	.128	-156	.192	.174	-261	-19	A	-261	-41	A
.157	.137	-165	.195	.177	-261	-19	A	-261	-41	A
.167	.147	-175	.189	.165	-261	-19	A	-261	-41	A
.167	.147	-175	.205	.185	-275	-43	A	-275	-39	A
.179	.159	-187	.210	.192	-281	-41	A	-281	-35	A
.186	.166	-194	.224	.206	-287	-41	A	-287	-35	A
.197	.177	-205	.232	.215	-297	-41	A	-297	-35	A
.197	.177	-205	.241	.223	-312	-39	A	-312	-47	---
.197	.177	-205	.256	.238	-327	-37	A	-327	-23	---
.211	.191	-219	.252	.234	-327	-37	A	-327	-23	---
.217	.197	-225	.269	.251	-348	-35	A	-348	-23	---
.224	.204	-232	.286	.266	-348	-35	A	-348	-23	---
.242	.222	-250	.297	.277	-359	-33	A	-359	-23	---
.242	.222	-250	.312	.292	-375	-47	---	-375	-49	---
.253	.233	-261	.308	.288	-375	-47	---	-375	-49	---
.258	.238	-266	.308	.288	-375	-47	---	-375	-49	---
.267	.247	-275	.312	.292	-375	-47	---	-375	-49	---
.267	.247	-275	.342	.322	-405	-23	---	-405	-51	---
.273	.253	-281	.323	.303	-405	-23	---	-405	-51	---
.279	.259	-287	.344	.324	-415	-23	---	-415	-51	---
.289	.269	-297	.339	.319	-415	-23	---	-415	-51	---
.304	.284	-312	.334	.314	-415	-23	---	-415	-51	---
.304	.284	-312	.364	.339	-460	-53	---	-460	-31	---
.340	.280	-348	.384	.325	-460	-53	---	-460	-31	---
.367	.347	-375	.448	.428	-500	-21	---	-500	-27	---

1/ See footnote at end of figure.

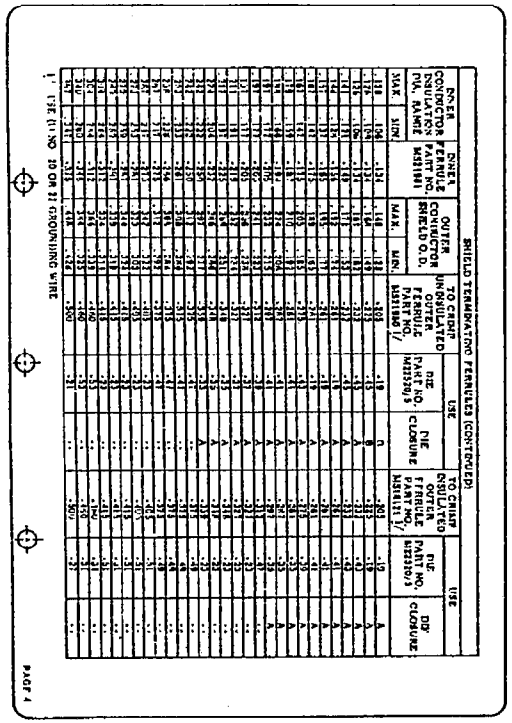

FIGURE 8. Instruction sheet - Continued.

Shield terminating ferrules (continued)										
Inner conductor insulation dia. range		Inner ferrule PIN MS21981	Outer conductor shield O.D.		To crimp uninsulated outer ferrule PIN MS21980 1/	Use		To crimp insulated outer ferrule PIN MS18121 1/	Use	
Max	Min		Max	Min		Die PIN M22520/5	Die closure		Die PIN M22520/5	Die closure
					-101	-33	B	---	-23	B
					-128	-35	B	---	-35	B
					---	-47	---	---	-47	---
					---	-37	B	---	-37	B
					-359	-33	A	---	---	---
					-156	-39	B	-281,-297,-287	-35	A
					-348	-35	A	---	---	---
					-175	-41	B	-149	-41	B
					327	-37	A	---	---	---
					-187,-199,-194	-43	B	-156	-43	B
					-312	-39	A	-275	-39	A
					-205,-219	-19	B	-175	-19	B
					-281,-287,-297	-41	A	-261	-41	---
					-255	-45	B	-232	-43	A
					-275	-43	A	---	---	---
					-232	-45	A	-187,-194,-199	-45	B
					-261	-19	A	-205,-219,-225	-19	A
					-405,-415	-23	A	-359	-23	---
					-460	-53	---	---	---	---
					-500	-21	---	---	---	---
					---	---	---	-375	-49	---
					---	---	---	-405,-415	-51	---
					---	---	---	-460	-31	---
					---	---	---	-500	-27	---
					---	---	---	---	---	---
					-175	-41	B	---	---	---
					-205	-19	B	---	---	---
					-261	-19	A	---	---	---
					-275	-63	---	---	---	---
					-348	-61	---	---	---	---
					-460	-61	---	---	---	---

1/ Use (1) number 20 or number 22 grounded wire.

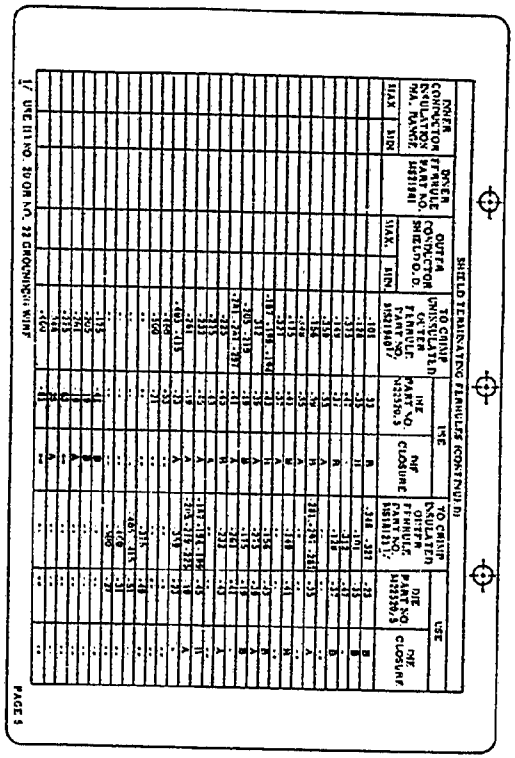

FIGURE 8. Instruction sheet - Continued.

Dies for coaxial, shielded contacts

PIN	Contacts accommodated	Cables accommodated
M22520/5-63	M39029/6-01 M39029/13-01 M39029/14-01	RG178A/U, RG196A/U Grumman GC18K-1-22S Revere WH-95623
M22520/5-04	M39029/6-02, -03, -04, -05, -06 M39029/13-02, -03, -04, -05, -06 M39029/14-02, -03, -04, -05, -06	RG180B/U, RG187A/U, RG195A/U, RG188A/U Microdot 293-3922, 250-4070 Raychem 48-950, 48-502
M22520/5-06	M39029/7-001, M39029/8-001	RG178B/U, RG178A/U, RG196A/U, 30 AWG, 28 AWG
	M39209/7-002, M39029/8-002	RG174/U, RG188A/U, 26 AWG
	M39029/7-003, M39029/8-003	24 AWG
M22520/5-08	M83733/13, /14	RG179/U
M22520/5-10	ON089558-1, -2	RG195/U

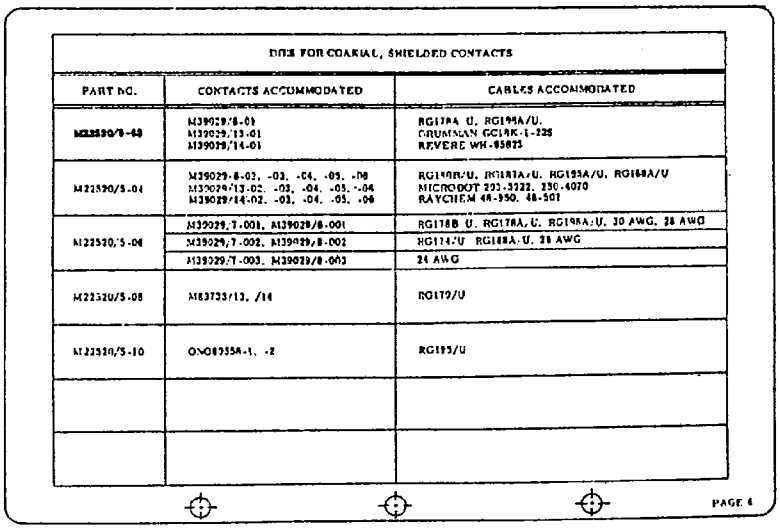

DIES FOR COAXIAL, SHIELDED CONTACTS

PART NO.	CONTACTS ACCOMMODATED	CABLES ACCOMMODATED
M22520/5-63	M39029/6-01 M39029/13-01 M39029/14-01	RG178A/U, RG196A/U. GRUMMAN GC18K-1-22S REVERE WH-95623
M22520/5-04	M39029/6-02, -03, -04, -05, -06 M39029/13-02, -03, -04, -05, -06 M39029/14-02, -03, -04, -05, -06	RG180B/U, RG187A/U, RG195A/U, RG188A/U MICRODOT 293-3922, 250-4070 RAYCHEM 48-950, 48-502
M22520/5-06	M39029/7-001, M39029/8-001	RG178B/U, RG178A/U, RG196A/U, 30 AWG, 28 AWG
	M39029/7-002, M39029/8-002	RG174/U, RG188A/U, 26 AWG
	M39029/7-003, M39029/8-003	24 AWG
M22520/5-08	M83733/13, /14	RG179/U
M22520/5-10	ON089558-1, -2	RG195/U

PAGE 4

FIGURE 8. Instruction sheets - Continued.

Dies for coaxial radio frequency, class H crimp type series connectors

To crimp inner contact PIN M39012/	Use: Die PIN M22520/5	Use: Die closure	To crimp outer ferrule PIN M39012/	Use: Die PIN M22520/5	Use: Die closure	Cables accommodated
1-10	-61	B	1-50	-61	A	RG9/U, 214/U, 225/U, 393/U
1-10	-61	B	1-51	-61	A	RG8/U, 213/U
1-11	-19	B	1-52	-19	A	RG142B/U, 400/U
2-10	-61	B	2-50	-61	A	RG9/U, 214/U, 225/U, 393/U
2-10	-61	B	2-51	-61	A	RG8/U, 213/U
2-11	-19	B	2-52	-19	A	RG142B/U, 400/U
3-10	-61	B	3-50	-61	A	RG9/U, 214/U, 225/U, 393/U
3-10	-61	B	3-51	-61	A	RG8/U, 213/U
3-11	-19	B	3-52	-19	A	RG400/U, 142B/U
5-10	-61	B	5-50	-61	A	RG9/U, 214/U, 225/U, 393/U
5-10	-61	B	5-51	-61	A	RG8/U, 213/U
5-11	-19	B	5-52	-19	A	RG142B/U, 400/U
16-10	-41	B	16-50	-41	A	RG122/U
16-11	-41	B	16-50	-41	A	RG180/U, 195/U
16-10	-19	B	16-51	-19	A	RG142B/U, 400/U
17-10	-41	B	17-50	-41	A	RG122/U
17-11	-41	B	17-50	-41	A	RG180/U, 195/U
17-10	-19	B	17-51	-19	A	RG142B/U, 400/U
18-10	-41	B	18-50	-41	A	RG122/U
18-11	-41	B	18-50	-41	A	RG180/U, 195/U
18-10	-19	B	18-51	-19	A	RG142B/U, 400/U
19-10	-41	B	19-50	-41	A	RG122/U
19-11	-41	B	19-50	-41	A	RG9180/U, 195/U
19-10	-19	B	19-51	-19	A	RG142B/U, 400/U
26-10	-41	B	26-50	-41	A	RG122/U
26-11	-41	B	26-50	-41	A	RG180/U, 195/U

DIES FOR COAXIAL RADIO FREQUENCY, CLASS H CRIMP TYPE SERIES CONNECTORS

TO CRIMP INNER CONTACT PART NO. M39012/	USE: DIE PART NO. M22520/5	USE: DIE CLOSURE	TO CRIMP OUTER FERRULE PART NO. M39012/	USE: DIE PART NO. M22520/5	USE: DIE CLOSURE	CABLES ACCOMMODATED
1-10	-61	B	1-50	-61	A	RG9/U, 214/U, 225/U, 393/U
1-10	-61	B	1-51	-61	A	RG8/U, 213/U
1-11	-19	B	1-52	-19	A	RG142B/U, 400/U
2-10	-61	B	2-50	-61	A	RG9/U, 214/U, 225/U, 393/U
2-10	-61	B	2-51	-61	A	RG8/U, 213/U
2-11	-19	B	2-52	-19	A	RG142B/U, 400/U
3-10	-61	B	3-50	-61	A	RG9/U, 214/U, 225/U, 393/U
3-10	-61	B	3-51	-61	A	RG8/U, 213/U
3-11	-19	B	3-52	-19	A	RG400/U, 142B/U
5-10	-61	B	5-50	-61	A	RG9/U, 214/U, 225/U, 393/U
5-10	-61	B	5-51	-61	A	RG8/U, 213/U
5-11	-19	B	5-52	-19	A	RG142B/U, 400/U
16-10	-41	B	16-50	-41	A	RG122/U
16-11	-41	B	16-50	-41	A	RG180/U, 195/U
16-10	-19	B	16-51	-19	A	RG142B/U, 400/U
17-10	-41	B	17-50	-41	A	RG122/U
17-11	-41	B	17-50	-41	A	RG180/U, 195/U
17-10	-19	B	17-51	-19	A	RG142B/U, 400/U
18-10	-41	B	18-50	-41	A	RG122/U
18-11	-41	B	18-50	-41	A	RG180/U, 195/U
18-10	-19	B	18-51	-19	A	RG142B/U, 400/U
19-10	-41	B	19-50	-41	A	RG122/U
19-11	-41	B	19-50	-41	A	RG180/U, 195/U
19-10	-19	B	19-51	-19	A	RG142B/U, 400/U
26-10	-41	B	26-50	-41	A	RG122/U
26-11	-41	B	26-50	-41	A	RG180/U, 195/U

PAGE 7

FIGURE 8. Instruction sheets - Continued.

Dies for coaxial radio frequency, class H crimp type series connectors

To crimp inner contact PIN M39012/	Use: Die PIN M22520/5	Use: Die closure	To crimp outer ferrule PIN M39012/	Use: Die PIN M22520/5	Use: Die closure	Cables accommodated
26-10	-19	B	26-51	-19	A	RG142B/U, 400/U
27-10	-41	B	27-50	-41	A	RG8122/U
27-11	-41	B	27-50	-41	A	RG180/U, 195/U
27-10	-19	B	27-51	-19	A	RG142B/U, 400/U
28-10	-41	B	28-50	-41	A	RG122/U
28-11	-41	B	28-50	-41	A	RG180/U, 195/U
28-10	-19	B	28-51	-19	A	RG142B/U, 400U
29-10	-41	B	29-50	-41	A	RG122/U
29-11	-41	B	29-50	-41	A	RG180/U, 195/U
29-10	-19	B	29-51	-19	A	RG142B/U, 400/U
30-10	-19	B	30-50	-19	A	RG400/U, 142B/U
30-11	-41	B	30-51	-41	A	RG180/U, 195/U
35-10	-61	B	35-50	-61	A	RG9/U, 214/U, 225/U, 393/U
35-11	-19	B	35-51	-19	A	RG142B/U, 400/U
36-10	-61	B	36-50	-61	A	RG9/U, 214/U, 225/U, 393/U
36-10	-19	B	36-51	-19	A	RG142B/U, 400/U
38-10	-61	B	38-50	-61	A	RG9/U, 214/U, 225/U, 393/U
38-11	-19	B	38-51	-19	A	RG142B/U, 400/U
39-10	-61	B	39-50	-61	A	RG9/U, 214/U, 225/U, 393/U
39-11	-19	B	39-51	-19	A	RG142B/U, 400/U
40-10	-61	B	40-50	-61	A	RG9/U, 214/U, 225/U, 393/U
40-11	-19	B	40-51	-19	A	RG142B/U, 400/U
55-10	Solder	---	55-50	-19	A	RG142B/U, 400/U
---	---	---	56-50	-19	A	RG142B/U, 400/U
57-10	Solder	---	57-50	-19	A	RG142B/U, 400/U
58-10	Solder	---	58-50	-19	A	RG142B/U, 400/U
59-10	Solder	---	59-50	-19	A	RG142B/U, 400/U

DIES FOR COAXIAL RADIO FREQUENCY, CLASS H CRIMP TYPE SERIES CONNECTORS (CONTINUED)

TO CRIMP INNER CONTACT PART NO. M39012/	USE: DIE PART NO. M22520/5	USE: DIE CLOSURE	TO CRIMP OUTER FERRULE PART NO. M39012/	USE: DIE PART NO. M22520/5	USE: DIE CLOSURE	CABLES ACCOMMODATED
26-10	-19	B	26-51	-19	A	RG142B/U, 400/U
27-10	-41	B	27-50	-41	A	RG122/U
27-11	-41	B	27-50	-41	A	RG180/U, 195/U
27-10	-19	B	27-51	-19	A	RG142B/U, 400/U
28-10	-41	B	28-50	-41	A	RG122/U
28-11	-41	B	28-50	-41	A	RG180/U, 195/U
28-10	-19	B	28-51	-19	A	RG142B/U, 400U
29-10	-41	B	29-50	-41	A	RG122/U
29-11	-41	B	29-50	-41	A	RG180/U, 195/U
29-10	-19	B	29-51	-19	A	RG142B/U, 400/U
30-10	-19	B	30-50	-19	A	RG400/U, 142B/U
30-11	-41	B	30-51	-41	A	RG180/U, 195/U
35-10	-61	B	35-50	-61	A	RG9/U, 214/U, 225/U, 393/U
35-11	-19	B	35-51	-19	A	RG142B/U, 400/U
36-10	-61	B	36-50	-61	A	RG9/U, 214/U, 225/U, 393/U
36-10	-19	B	36-51	-19	A	RG142B/U, 400/U
38-10	-61	B	38-50	-61	A	RG9/U, 214/U, 225/U, 393/U
38-11	-19	B	38-51	-19	A	RG142B/U, 400/U
39-10	-61	B	39-50	-61	A	RG9/U, 214/U, 225/U, 393/U
39-11	-19	B	39-51	-19	A	RG142B/U, 400/U
40-10	-61	B	40-50	-61	A	RG9/U, 214/U, 225/U, 393/U
40-11	-19	B	40-51	-19	A	RG142B/U, 400/U
55-10	SOLDER	--	55-50	-19	A	RG142B/U, 400/U
--	--	--	56-50	-19	A	RG142B/U, 400/U
57-10	SOLDER	--	57-50	-19	A	RG142B/U, 400/U
58-10	SOLDER	--	58-50	-19	A	RG142B/U, 400/U
59-10	SOLDER	--	59-50	-19	A	RG142B/U, 400/U

PAGE 8

FIGURE 8. Instruction sheets - Continued.

REQUIREMENTS:

Design and configuration: See figures 1 through 6.

Materials:

Case and cover (category 3): Sheet metal, 21 gauge in accordance with QQ-S-698.

Color is gray baked enamel on all metal parts except navy requirements which requires a yellow case and cover.

Insert and retainer pad: Fire retardant foamed polyethylene in accordance with PP-C-1752, color optional.

Instruction sheets and contents charts: White vinyl .020 inch (.51 mm) thick.

Clasps: Draw pull type with provision for locking device, suitably plated to resist corrosion.

Handles and hinges: Suitably plated to resist corrosion.

Binder: Loose leaf, three ring .562 inch (14.27 mm) ±.062 inch (1.57 mm) I.D., 2.75 inch (69.85 mm) center distance between rings, securely riveted to inside of cover as shown.

Nameplate: In accordance with MIL-P-19834.

Instruction sheets and contents charts (see figures 7 and 8): Lettering shall be legible and protected with a transparent coating. Contents charts (centered on inside of case cover) shall have pressure sensitive adhesive backing, and shall show the insert cavity configurations and the respective tool part numbers. A list of federal stock numbers will also be supplied.

Part or Identifying Numbers (PIN):

M83521/7-01 Tool kit.

M83521/7-02 or M83521/7-03 (yellow) tool case assembly.

QUALIFICATION:

First article inspection and sample size as required in basic document.

CONCLUDING MATERIAL

Custodians:
Army - CR
Navy - AS
Air Force - 85

Review activities:
Army - AV, GL, MI
Navy - EC, OS, SH
Air Force - 11, 99
DLA - ES

User activities:
Army - AR, AT, ME
Navy - MC, SH
Air Force - 19, 80

Preparing activity:
Air Force - 85

Agent:
DLA - ES

(Project 5935-3643)