MILITARY SPECIFICATION SHEET

MAINTENANCE KITS, ELECTRICAL CONNECTORS, CONTACTS, AND CONNECTOR AND CABLE ACCESSORIES MAINTENANCE KIT FOR A10 AIRCRAFT, CONNECTOR SYSTEMS

This specification is approved for use within the Department of the Air Force, and is available for use by all Departments and Agencies of the Department of Defense.

The requirements for acquiring the maintenance kits described herein shall consist of this specification and the latest issue of MIL-M-83521.

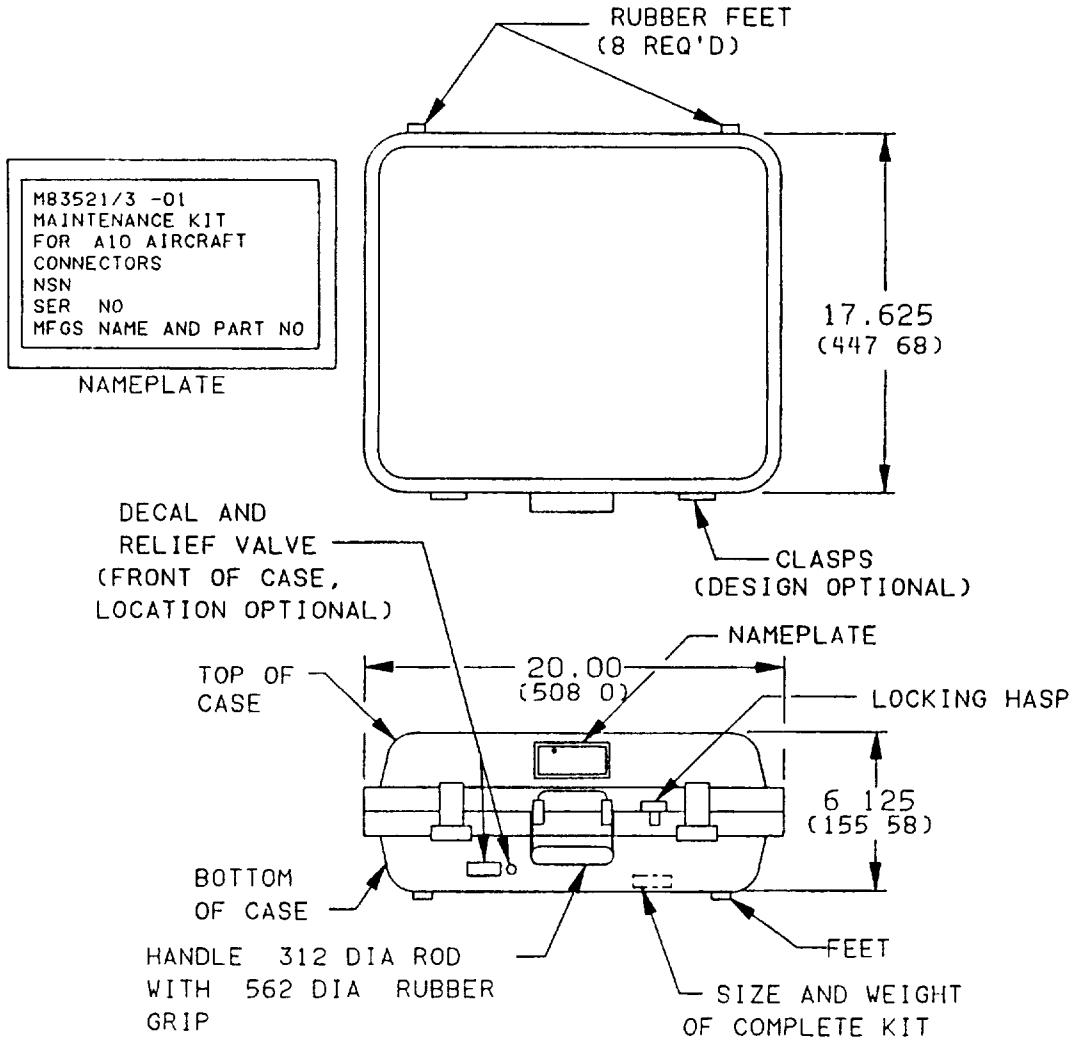

NOTES:
1. Dimensions are in inches.
2. Metric equivalents are given for general information only.
3. Metric equivalents are in parentheses.
4. Part number M83521/3-01 includes case and tools.

FIGURE 1. Maintenance kit for A10 aircraft connectors.

AMSC N/A
FSC 5935

DISTRIBUTION STATEMENT A. Approved for public release, distribution is unlimited.

PARTS LIST

(1)	M83521/3-02	- Tool case assembly
(1)	M22520/1-01	- Crimp tool frame
(1)	M22520/1-02	- Turret head.
(1)	M22520/1-04	- Turret head
(1)	M22520/1-12	- Turret head
(1)	Daniels TH18 1/	- Turret head (or approved equivalent)
(1)	M22520/2-01	- Crimp tool frame
(1)	M22520/2-02	- Positioner
(1)	M22520/2-06	- Positioner
(1)	M22520/2-07	- Positioner
(1)	M22520/2-09	- Positioner
(1)	M22520/2-10	- Positioner
(1)	M22520/2-13	- Positioner
(1)	M22520/2-24	- Positioner
(1)	M22520/2-27	- Positioner
(1)	Daniels K30C 1/	- Positioner (or approved equivalent)
(1)	Daniels K413 1/	- Positioner (or approved equivalent)
(1)	M22520/5-01	- Crimp tool frame
(1)	M22520/5-05	- Die set
(1)	M22520/5-06	- Die set
(1)	M22520/5-10	- Die set
(1)	M22520/5-25	- Die set
(1)	M22520/5-35	- Die set
(1)	Daniels Y117 1/	- Die set (or approved equivalent)
(1)	Daniels Y560 1/	- Die set (or approved equivalent)
(1)	M22520/3-1 1/	- In-service inspection gauge
(1)	Allen 74008	- Hex wrench (or approved equivalent) (FSCM 70276)
(1)	Ideal 45-173 1/	- Wire stripper (or approved equivalent)
(1)	Ideal 45-174 1/	- Wire stripper (or approved equivalent)
(1)	Ideal 45-123 1/	- Wire cutter (or approved equivalent)
(1)	Marking pencil 1/	- Grease type
(1)	Daniels HX3-82 1/	- Die remover tool (or approved equivalent)
(1)	Cannon 036069-0000 1/	- Installing/removal tool (or approved equivalent)
(1)	Daniels DRK51-16 1/	- Removal tool (or approved equivalent)
(1)	M81969/8-17 1/ 2/	- Installing tool
(1)	M81969/8-05 1/ 2/	- Installing tool
(1)	M81969/8-01 1/ 2/	- Installing tool
(1)	M81969/8-18 1/ 2/	- Removal tool
(1)	M81969/8-06 1/ 2/	- Removal tool
(1)	M81969/8-02 1/ 2/	- Removal tool
(1)	M81969/14-03 1/ 2/	- Installing/removal tools
(1)	308 1/ 2/	- General hardware manufacturing co
(1)	M81969/19-07 1/ 2/	- Removal tool

FIGURE 1 Maintenance kit for A10 aircraft connectors - Continued

PARTS LIST - Continued

(1)	M81969/19-08 1/ 2/	- Removal tool
(1)	M81969/19-09	- Removal tool
(1)	M81969/17-09	- Installing tool.
(1)	M81969/17-04	- Installing tool
(1)	M81969/17-05	- Installing tool
(1)	Daniels DRK58-8	- Removal tool (or approved equivalent).
(1)	M81969/30-01 1/ 2/	- Removal tool
(1)	M81969/30 1/ 2/	- Removal tool handle
(1)	M81969/30-5 1/ 2/	- Removal tool tips
(1)	Daniels CG20 1/	- Contact gauge (or approved equivalent)
(1)	Daniels CG16 1/	- Contact gauge (or approved equivalent)
(1)	Daniels CG12 1/	- Contact gauge (or approved equivalent)
(1)	Daniels CG22 1/	- Contact gauge (or approved equivalent)
(1)	Daniels DRK105-HDL 1/	- Removal tool handle (or approved equivalent)
(5)	Daniels DRK105-20-1 1/	- Removal tool tip (or approved equivalent)
(10)	Daniels DRK105-22M-1 1/	- Removal tool tip (or approved equivalent)
(3)	ON089564 1/	- Installing tools
(3)	ON089565 1/	- Removal tools
(2)	M81969/29-03	- Removal tools
(10)	M81969/14-04	- Installing/removal tools.
(20)	M81969/14-01	- Installing/removal tools
(20)	M81969/14-02	- Installing/removal tools
(1 set)	Contents charts, instruction sheets, tool selection chart, and part number -NSN cross reference chart	
(1)	DRK105-16-1	- Daniels removal tool tip (or equivalent)
(20)	81515-23	- Deutsch removal tool (or equivalent)
(2)	114008	- Deutsch removal tool (or equivalent)
(1)	M81969/30-06 1/ 2/	- Removal tool tip
(1)	M81969/30-07 1/ 2/	- Removal tool tip
(1)	M22520/5-101	- Die set
(1)	Listo corp 1620 1/	- Marking pencil (or equivalent) (FSCM 83745).

NOTES

1/ Approved equivalent parts may be used in lieu of specified parts but must be approved in advance by the 2750 ABW-ESP Gentile AFS, Ohio 45444, telephone number 513-296-5534 or autovon 986-5534

2/ Equivalent parts shall not be used if a military part is available

FIGURE 1 Maintenance kit for A10 aircraft connectors - Continued.

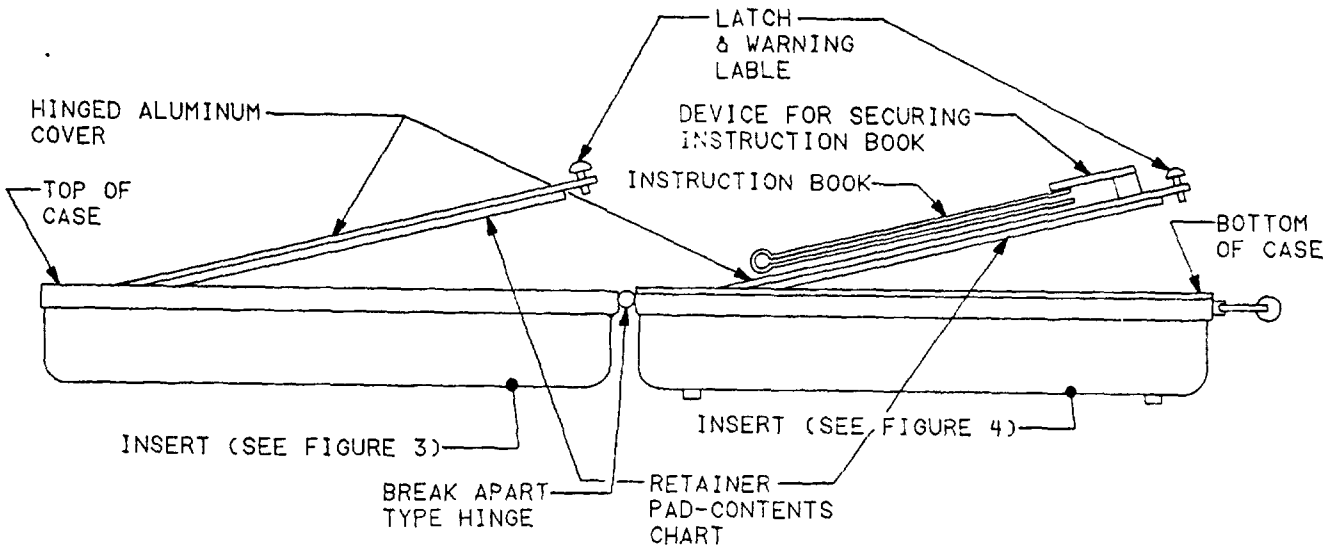

NOTES.
1. Remove all burrs; break sharp edges and corners.
2. Part number M83521/3-02 for case only (tools not included).

FIGURE 2. Tool case assembly.

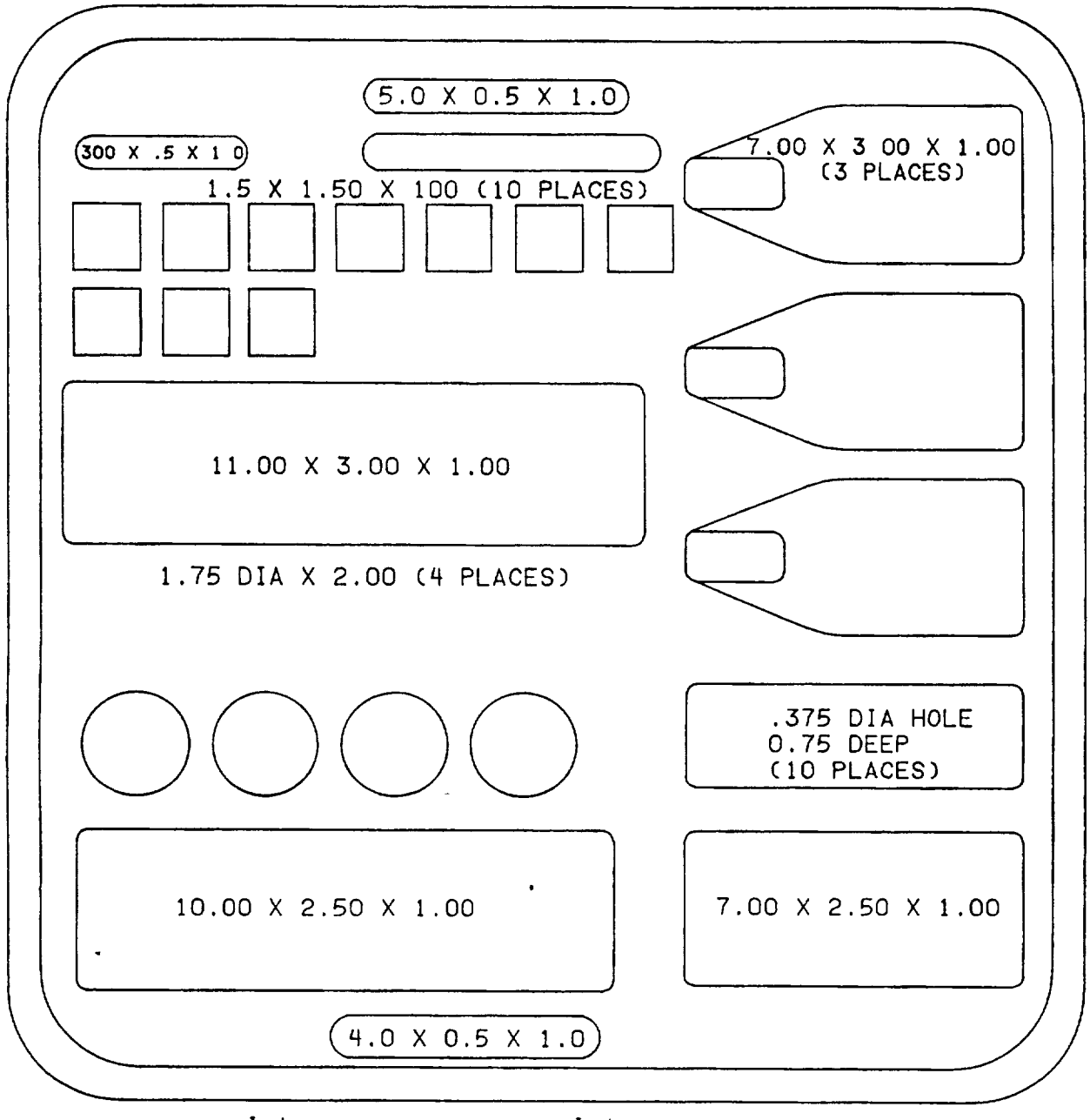

Inches	mm	Inches	mm
0.375	9.5	3.0	76.2
0.50	12.7	4.0	101.6
0.75	19.0	5.0	127.0
1.0	25.4	7.0	177.8
1.75	44.4	10.0	254.0
2.00	50.8	11.0	279.4
2.50	63.5		

NOTES:
1. Dimensions are in inches.
2. Metric equivalents are given for general information only.
3. Unless otherwise specified, tolerance is ±.125 (3.18 mm).
4. This insert is part of the tool case assembly (see figure 2).

FIGURE 3. Insert (top of case).

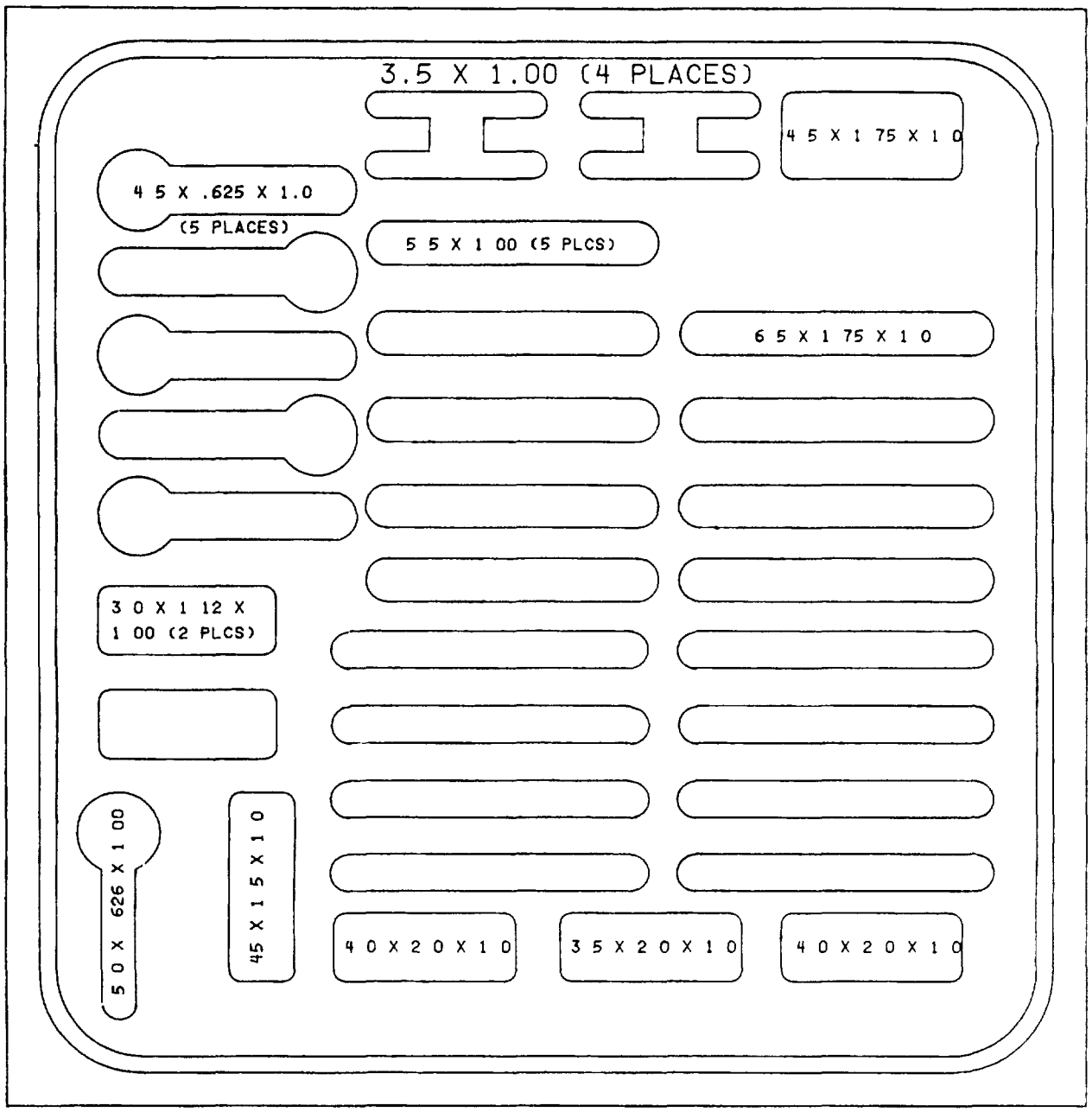

Inches	mm	Inches	mm
0 5	12.7	3.0	76.2
0.625	15.9	3.5	88.9
0.75	19.0	4.0	101.6
1.0	25.4	4.25	107.9
1.12	28.5	4.5	114.3
1.5	38.1	5.0	127.0
1.75	44.5	5.5	139.7
2.0	50.8	6.5	165.1

NOTES:
1. Dimensions are in inches.
2. Metric equivalents are given for general information only.
3. Unless otherwise specified, tolerance is ±.125 (3.18 mm).

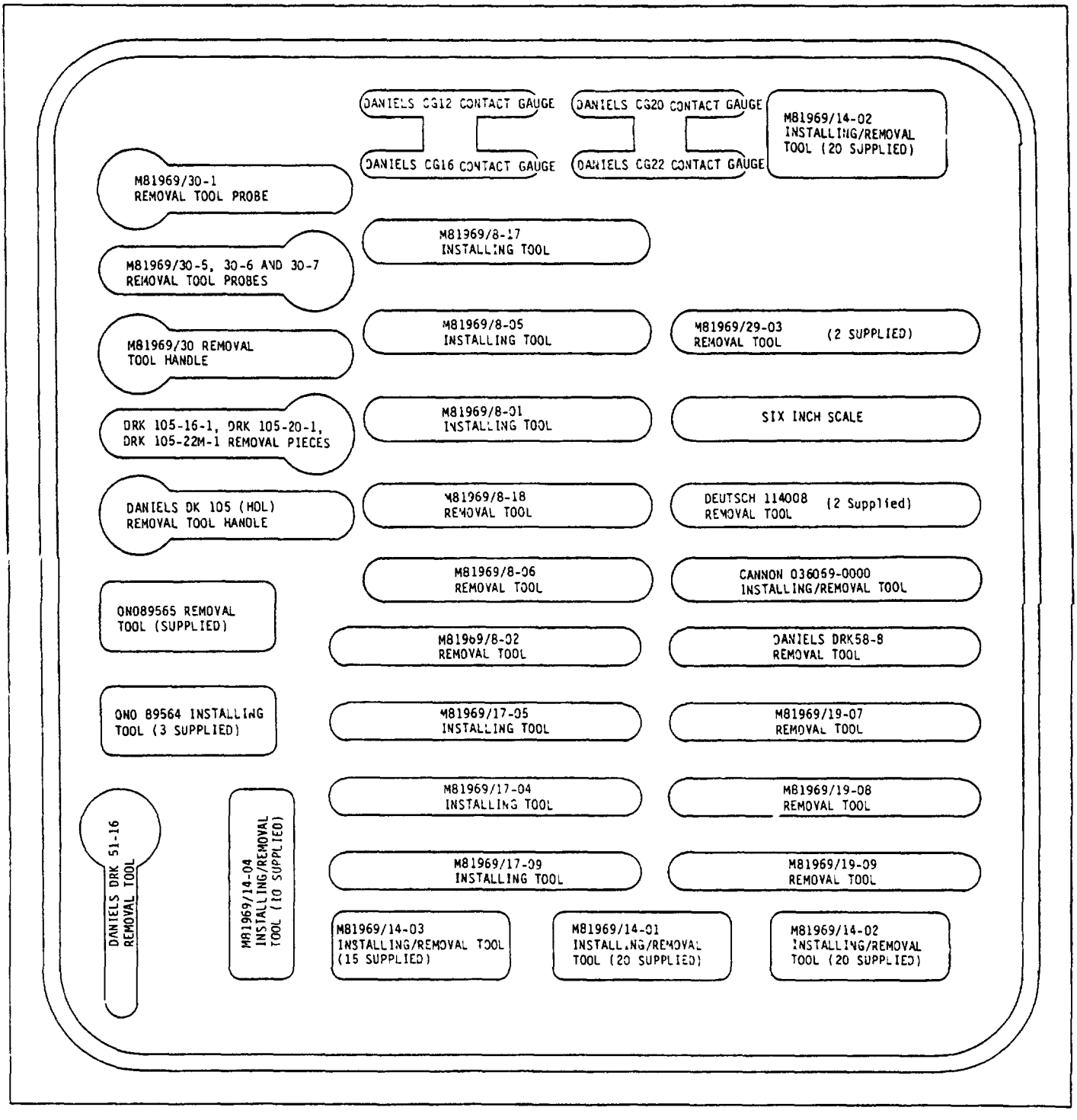

FIGURE 5. Contents chart (top).

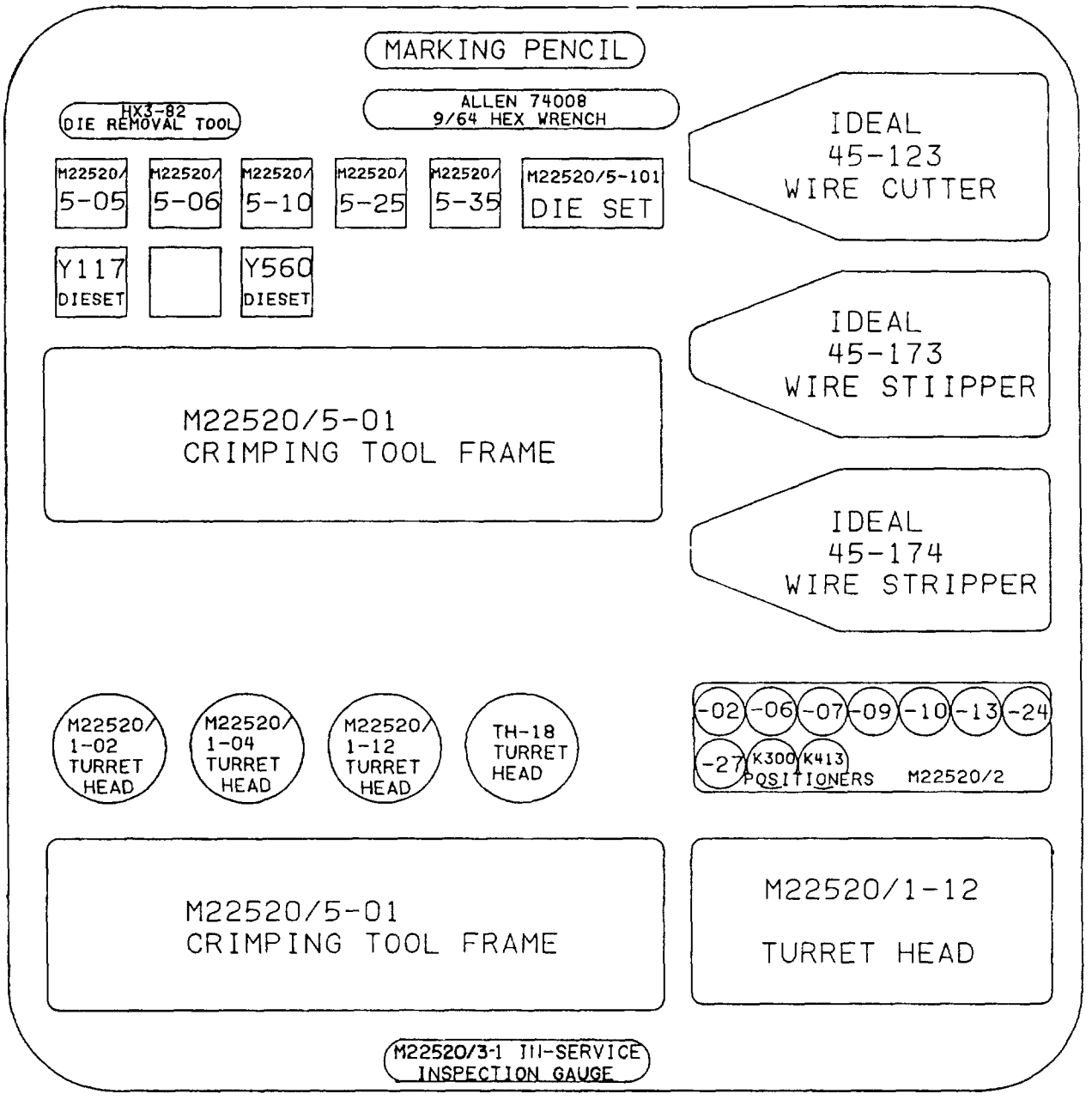

FIGURE 6. Contents chart (bottom).

NOTES

THE FOLLOWING GENERAL NOTES PERTAIN TO THE INSTRUCTIONS AND TOOL SELECTION CHARTS FOUND IN THIS KIT.

1. The charts contained in this kit are intended as a guide and a few special connectors may not be covered. When in doubt, do not guess!! Refer to the applicable technical publication or consult with the connector manufacturer.
2. Turret heads have three (3) separate positioners which are color coded. The tool section chart shows the proper positioner color to be used.
3. Hex dies with two (2) cavities are stamped with cavity designators "A" and "B". The tool selection chart shows the proper cavity in parantheses ( ).
4. Some size 20 contacts can be crimped with either the large or small tool. Both options are shown. Generally the small tool (M22520/2-01) is preferred.
5. Coaxial and triaxial cable may require special stripping instructions which are usually provided with the connector or contact, or which may be found in the appendix (if present).
6. Contact color code and "BIN" (Basic identification number) code information:

   a. MIL-C-39029 contacts - Each digit of the BIN code is designated on the contact by a color band as shown below. The width of the first color band is approximately twice the width of the second and the third band.

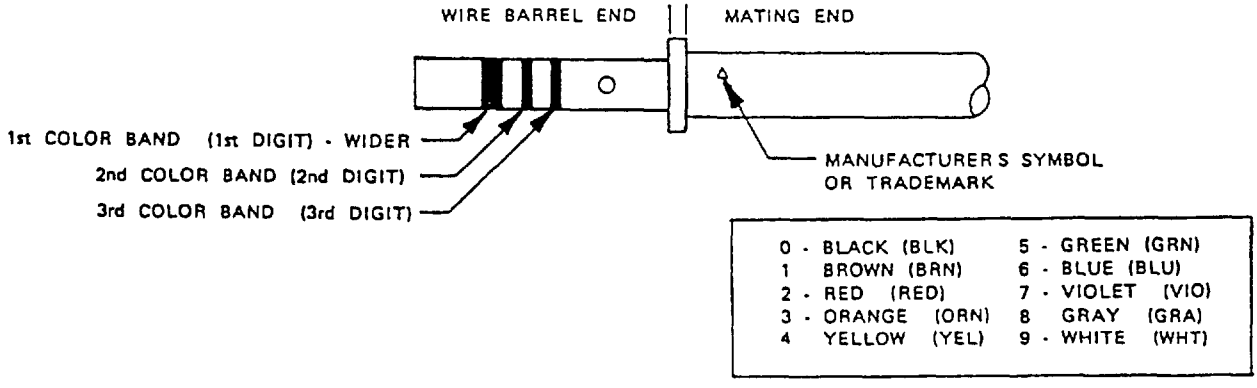

Example. Contact part number M39029/31-228. Contact specification MIL-C-39029/31 BIN code 228 - Color bands red, red, gray.

   b. MIL-C-39012 inner contacts - Nonsignificant color bands for identification purposes only.

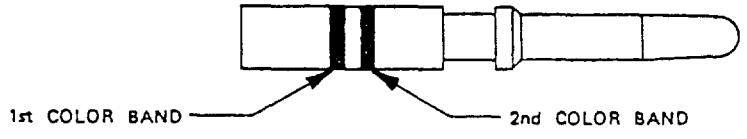

FIGURE 7. General notes.

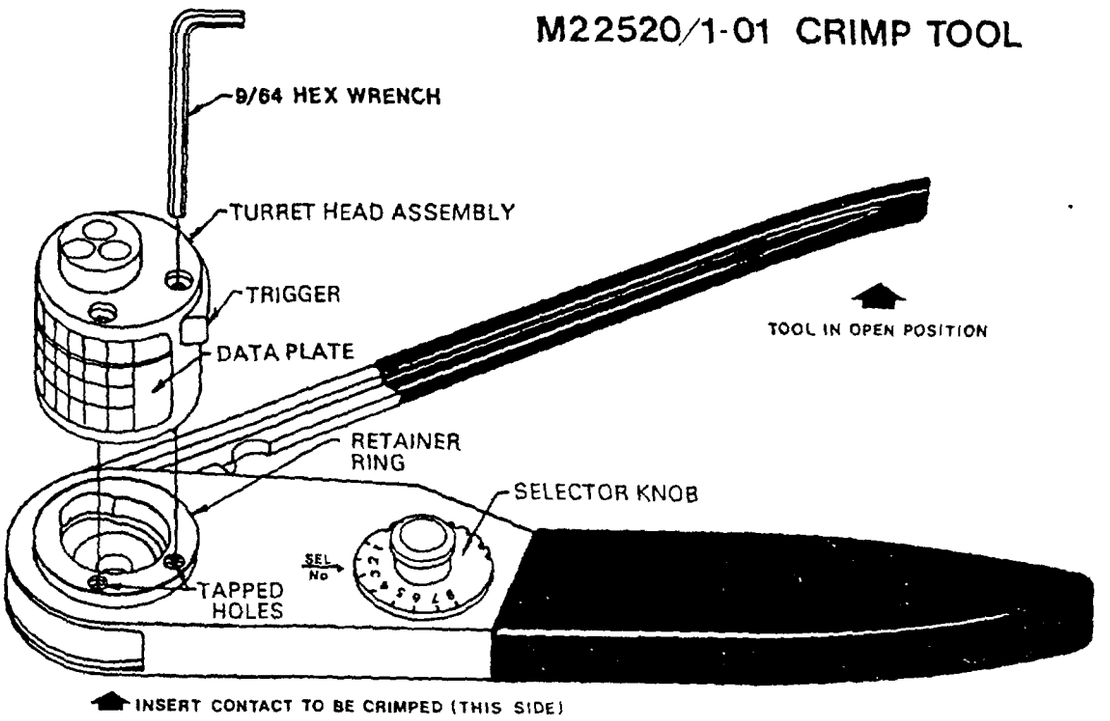

Instructions For Changing Turret Head

1 Press trigger which releases Turret to indexing position

2 Place selected Turret Head Assembly onto retainer ring with screws lined up with tapped holes

3. After Turret Head Assembly is seated against ring, tighten socket head screws with 9/64 inch Allen Wrench Turret should index easily without binding

4. To remove, loosen socket head screws until threads are disengaged from retainer ring and remove with a straight lifting motion

5 All Heads (single position, universal and turret) are attached by means of two socket head screws.

FIGURE 8. M22520/1-01 crimping tool instructions

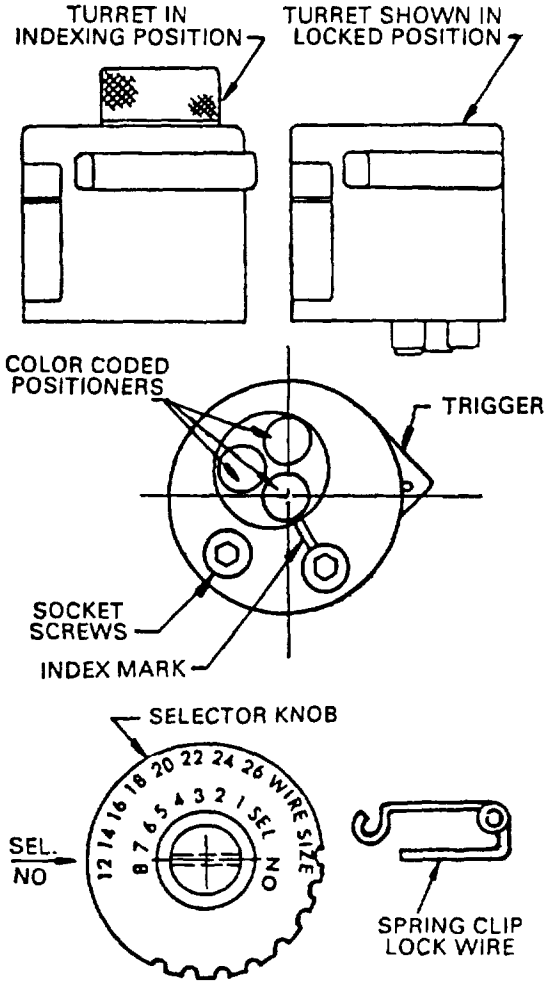

Instructions For Indexing Turret Head Assemblies

1. Press trigger which releases Turret to indexing position.
2. Select positioner desired from color coded data plate on side of Turret Head Assembly
3. Index Turret until color coded positioner is lined up with index mark on top of Turret Head Assembly, at which time the trigger will position the Turret
4. Press Turret until it snaps into locked position

Instructions For Using Indentor Closure Selector

1. Refer to data plate on Turret Head Assembly Below the wire size and opposite the contact size is listed the correct indentor closure number
2. Remove the spring clip lock from selector knob
3. Tool must be in open position when using selector
4. Raise selector knob and rotate to desired selector number
5. Replace the spring clip and tool is ready for use
6. Repeat instruction procedures when changing contact and/or wire sizes

FIGURE 8 M22520/1-01 crimping tool instructions - Continued

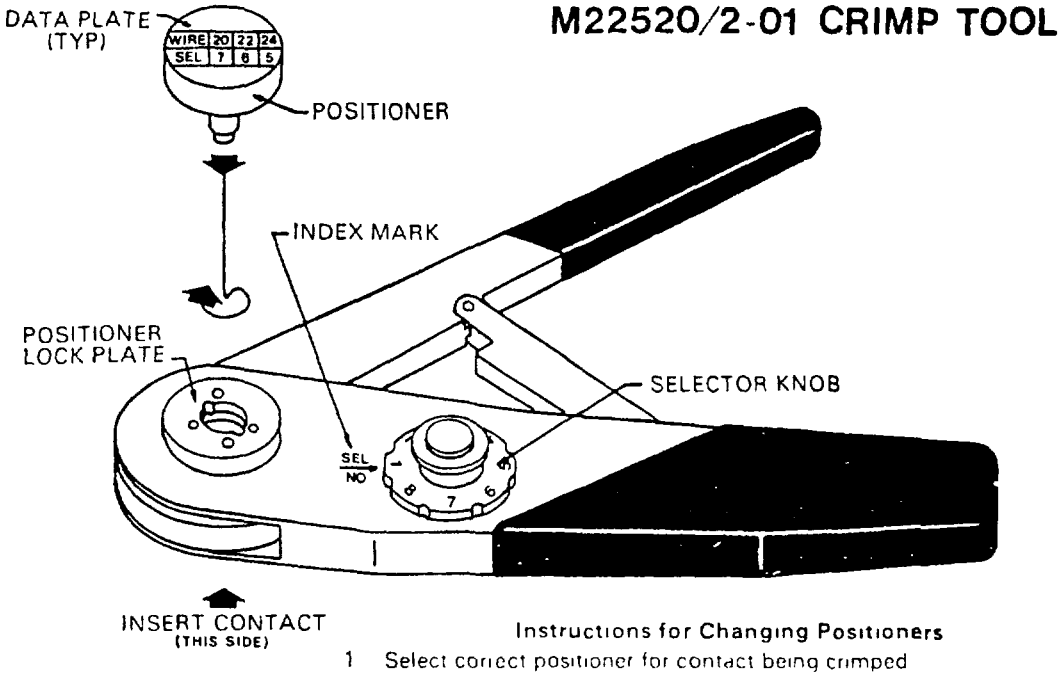

Instructions for Changing Positioners

1. Select correct positioner for contact being crimped
2. Insert positioner into positioner lock plate. Push and rotate 90° to install
3. Determine correct selector setting for the wire size from the data plate on end of positioner
4. Lift selector knob and rotate until selector number aligns with index mark
5. Tool is now ready for use. Insert contact and complete crimping cycle

FIGURE 8 M22520/1-01 crimping tool instructions - Continued

CRIMPING INSTRUCTIONS

1. Insert contact thru indentor opening into positioner.
2. Insert wire into contact and hold securely to insure that it bottoms in contact. Close handles until tool bottoms and ratchet 'Kicks Off'. Release handles and remove crimped contact.

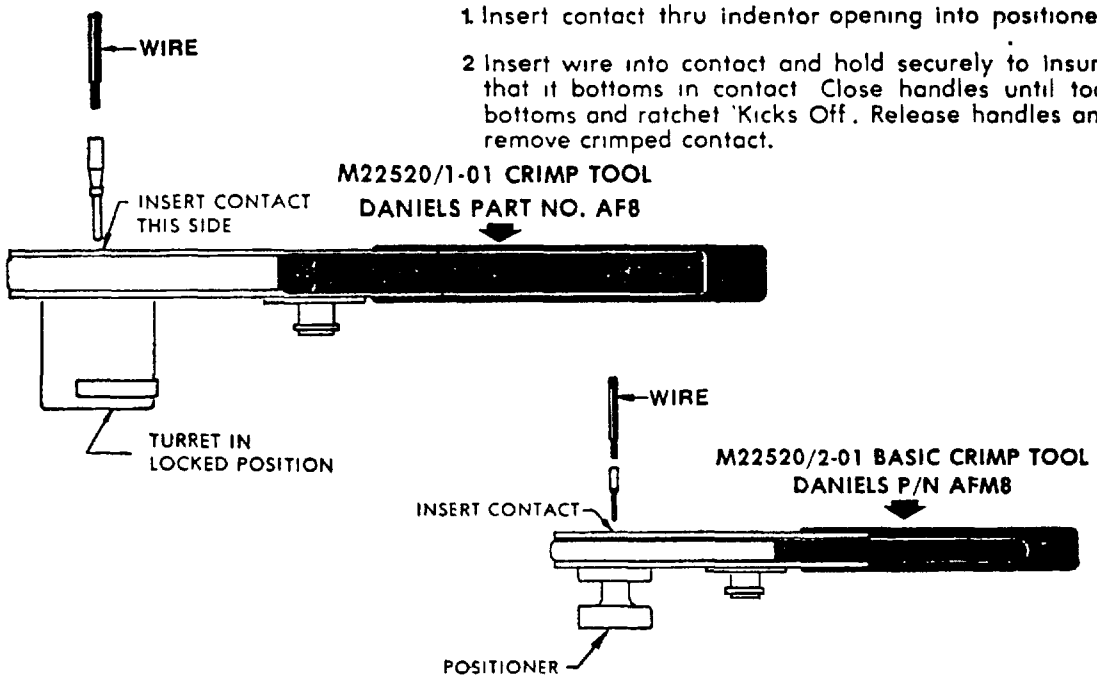

NOTE: After crimping cycle is completed, inspect contact. Make sure the wire is visible thru inspection hole in contact and there are no fractures in contact.

FIGURE 8 M22520/1-01 crimping tool instructions - Continued

Contact gauges are used to determine the size of the contact's mating end so that the correct removal tool can be selected. The gauge size that mates closely with the contact in question indicates the contact's size

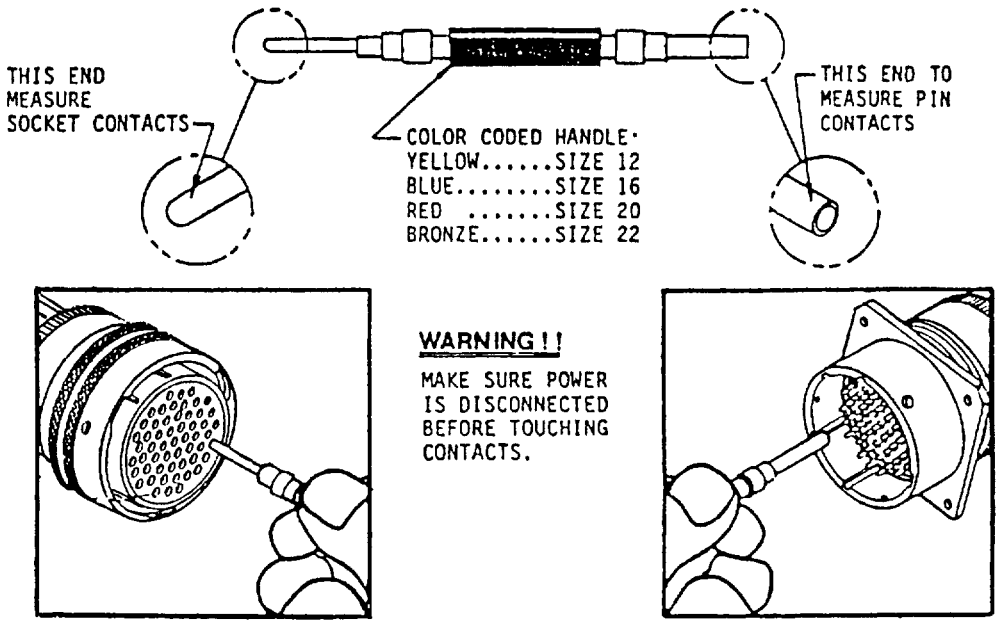

FIGURE 9. Contact gauge.

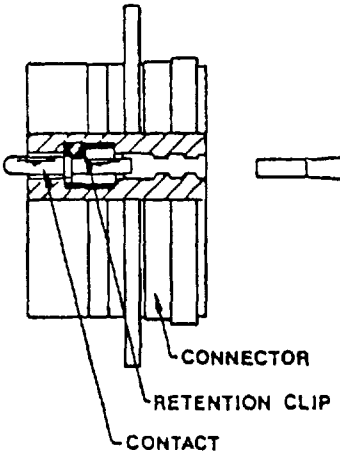

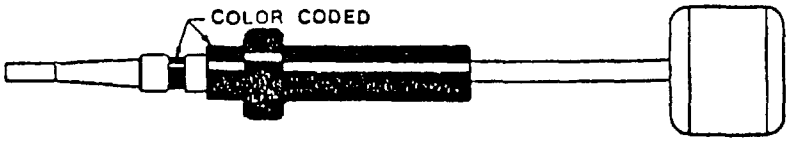

REMOVAL TOOL

1. Select correct removal tool (see table I).
2 Slide tool into the connector thru the sealing grommet and into the hard dielectric until tool stops against contact shoulder (see view A)
3. At this stage of removal, tool will collapse contact retention clips to the point where they no longer retain control.
4. Grip tool and withdraw contact from connector (see view B).

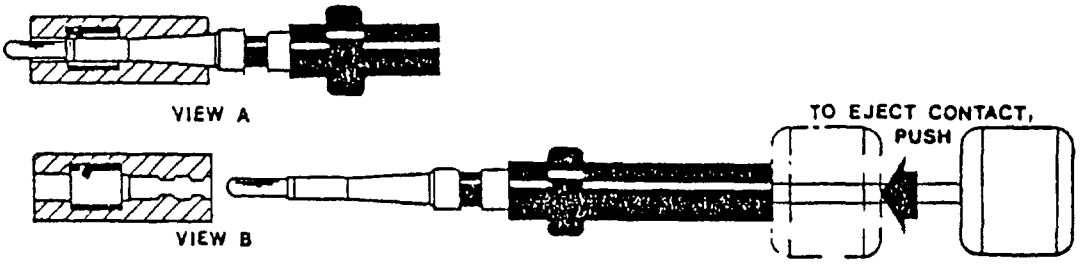

CAUTION: DO NOT TIP, SPREAD OR ROTATE TOOL WHILE IN CONNECTOR!!

FIGURE 10. Removal tools (rear release connectors).

CRIMPING TOOL P/N	SELECTOR SETTING FOR INSPECTION
M22520/1-01 (AF8)	4
M22520/2-01 (AFM8)	8

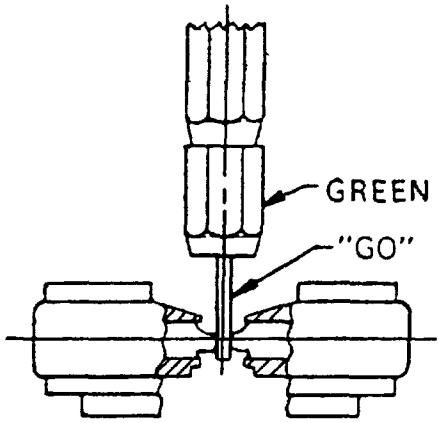

"GO"

Close handles to fully closed position. Insert "GO" gauge as shown. Gauge must pass freely between indenter tips.

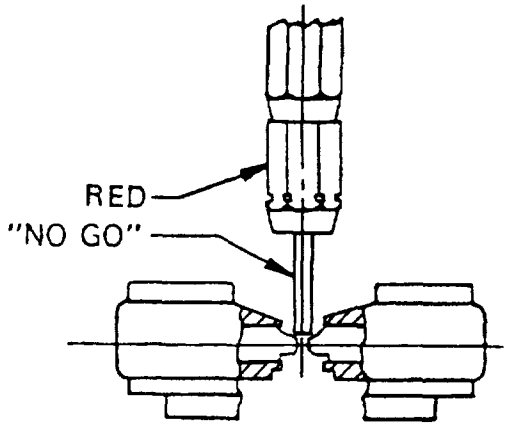

"NO GO"

Close handles to fully closed position. Insert "NO GO" gauge as shown. Gauge must not enter between indenter tips.

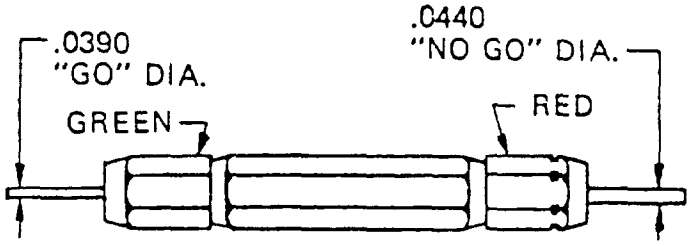

CAUTION: DO NOT CRIMP GAUGE

FIGURE 11. M22520/3-1 inspection gauge.

Caution Before attempting to remove dies from tool, assure that all lock pins* have been removed. Failure to do so may result in serious damage to the tool.

Die installation

1 Align groove in die with key in crimping tool and push shank of die into hole (See Configuration A) Close handle to make sure dies are properly seated and locked in place The tool is now ready for use

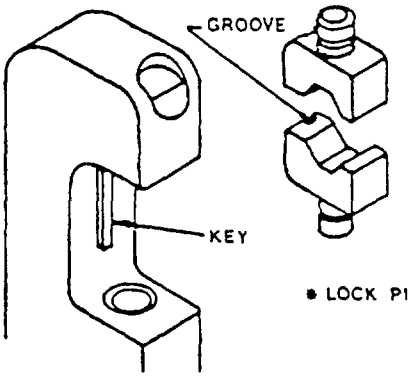

Configuration A

Die removal

1 With crimping tool handle open place die removal tool against end of knock-out pad and tap gently. (See Configuration B) The die will be released from the lock spring and ejected approximately 1/16 inch It can now be removed by hand

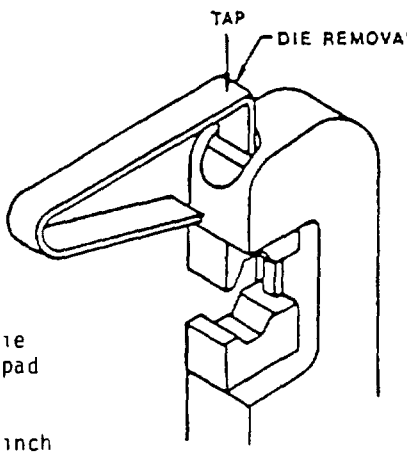

Configuration B

2 Close the crimping tool handle and slide the die removal tool between the die and tool body. (See Configuration C) Pull handle open with a snap action The die will be released from the lock spring and can then be removed by hand.

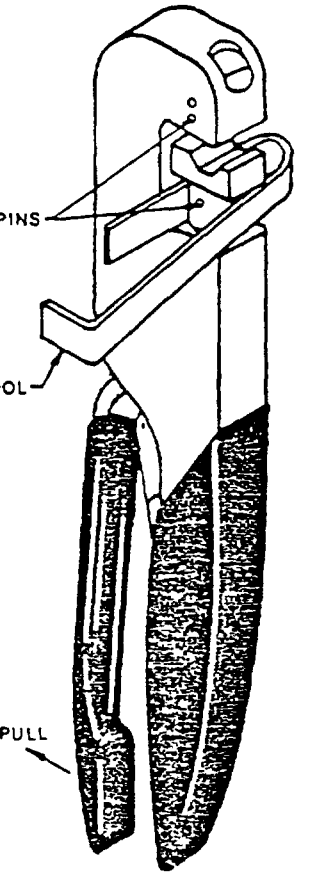

Configuration C

NOTE Die removal tool part number HX3-82 furnished with crimping tool (If die removal tool is not available, a rod, 3/16 inch by 1 3/4 inch approximately, may be used)

FIGURE 12 M22520/5-01 and M22520/10-01 crimp tools

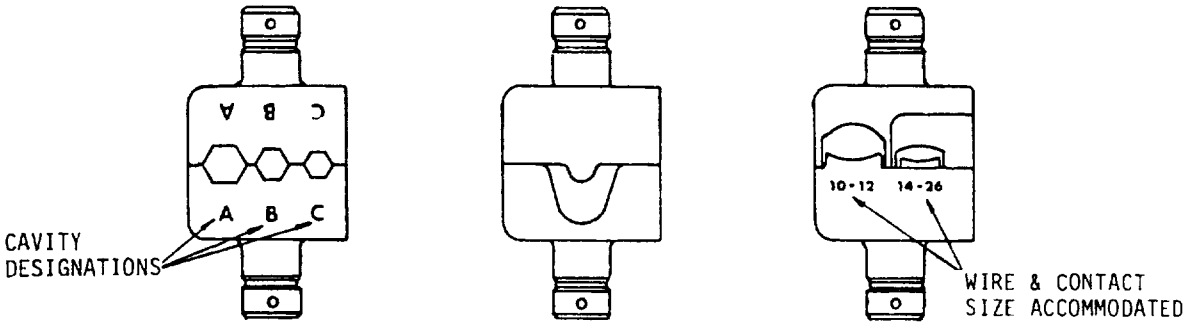

HEX DIE
1, 2 OR 3 CAVITIES

CONTACT DIE
CONTACT SIZE 12, 10, 8, 4 & 0

TERMINAL DIF
(SEE INSTRUCTIONS BELOW)

HX3 (M22520/10)
DIE SET

HX4 (M22520/5)
DIE SETS

FIGURE 13. M22520/10 and M22520/5 die sets.

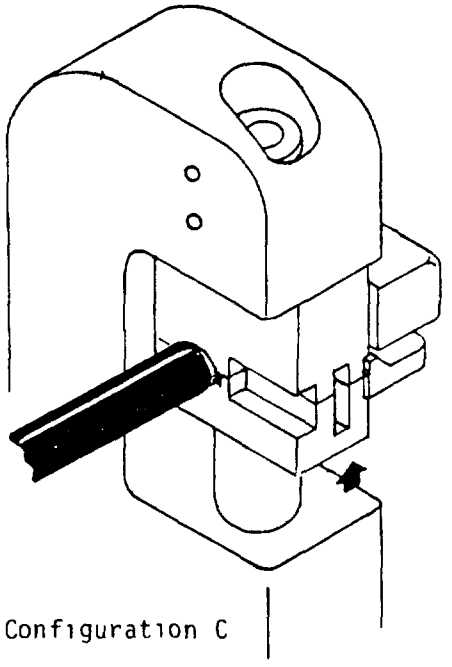

Configuration C

M81969/8-17
INSTALLING TOOL

1. With dies open (see configuration A) place terminal, splice or end cap in proper cavity. Sizes are stamped below each cavity on side of die
2. Locate terminal, splice or end cap wity locator (see configuration B) Terminal should locate with tongue between the arms of the locator. Splice is centered with notch in splice resting on the locator. End caps locate against the face of the locator. Insert wire to proper depth.
3 Close handle of tool until dies are closed and ratchet releases. The crimp is now complete (see configuration C).

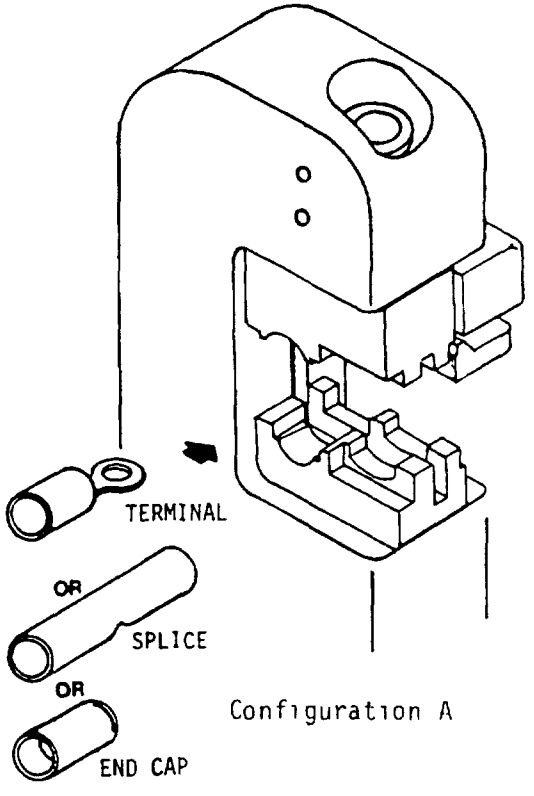

Configuration A

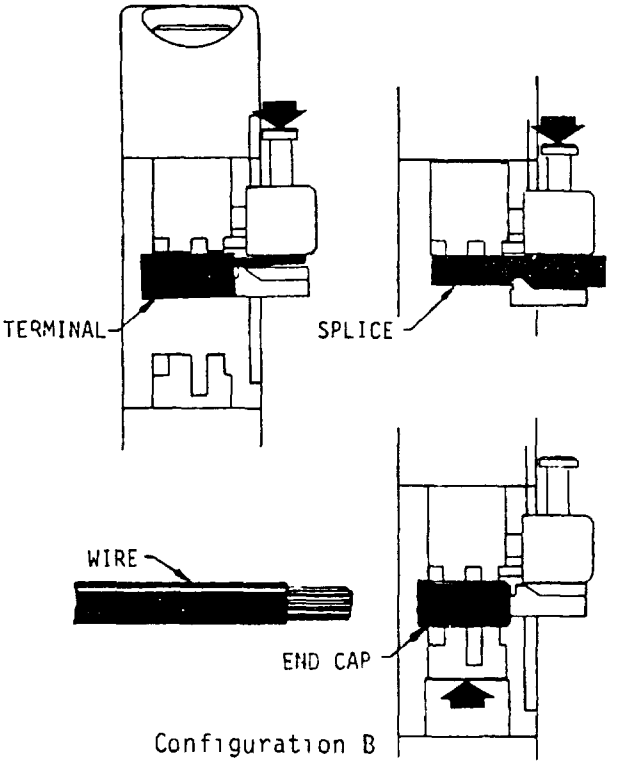

Configuration B

FIGURE 14. Crimping instructions.

MATED PLUG AND RECEPTACLE

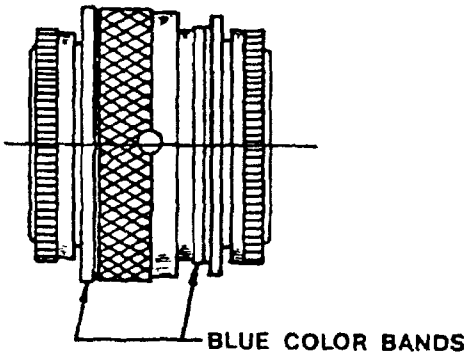

Connectors having contacts which are installed and removed from the rear of the connector have BLUE color bands around them.

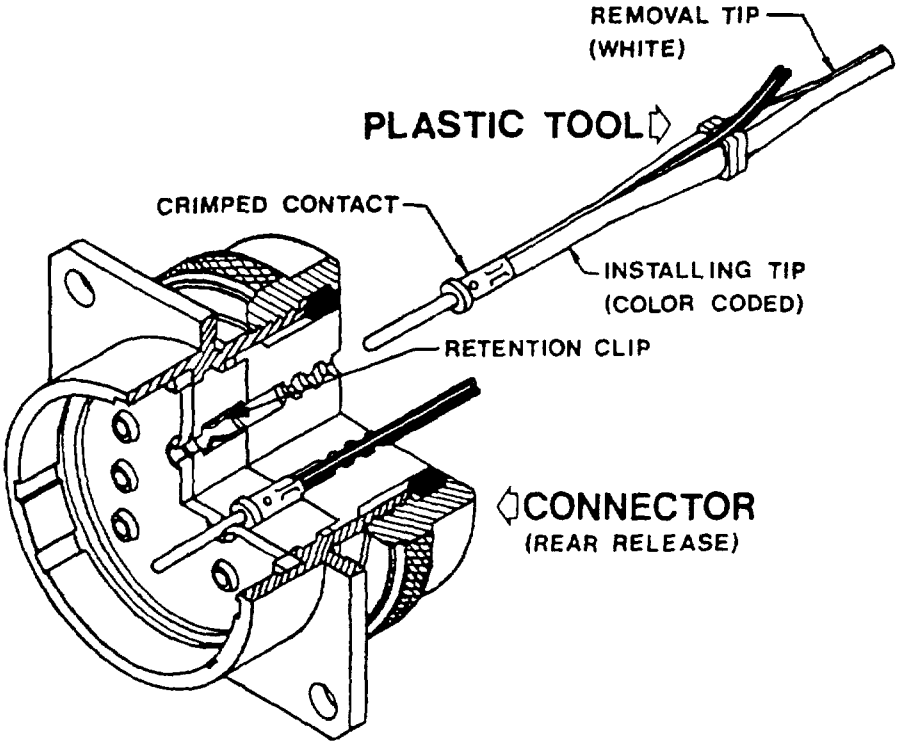

FIGURE 15 Rear release connectors

Installing (Colored end)

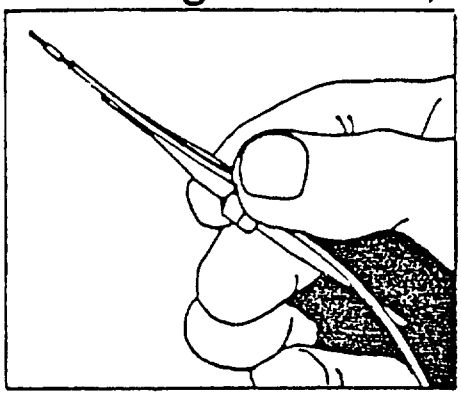

Hold the insertion half of tool (Colored) between the thumb and forefinger and lay the wire to be inserted along the slot, leaving about ½" protruding from the end of the tool to the crimp barrel of the contact.

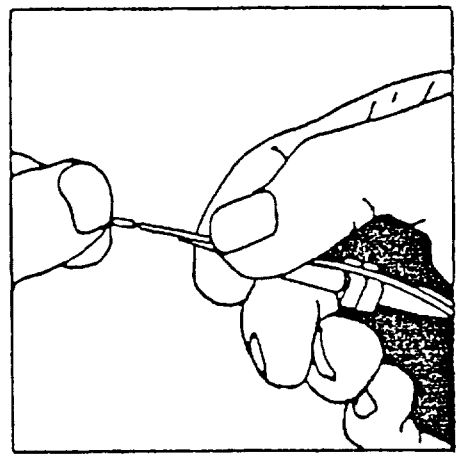

Squeeze the wire hard into the tool at the tip, between the thumb and forefinger, and at the same time quickly pull the protruding wire with the other hand away from the tool

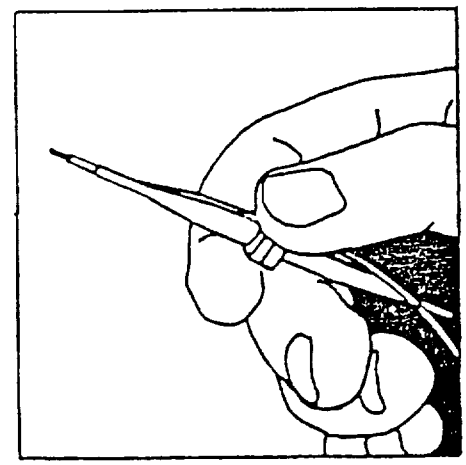

The wire will now have snapped into place Pull it back through tool until the tip seats on the back end of the crimp barrel

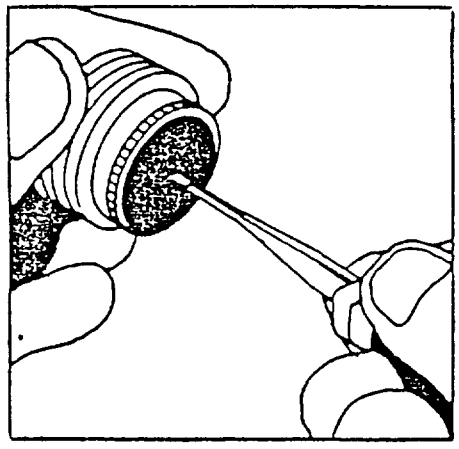

Holding the connector with the rear seal facing you slowly push the contact straight into the connector seal

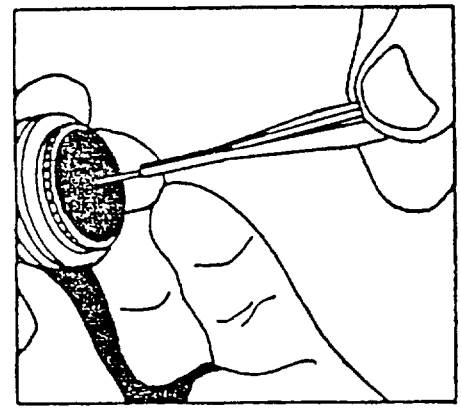

A firm stop will be evident when the contact positively seats in the connector.

FIGURE 16 Plastic tools instructions

Removal (White end)

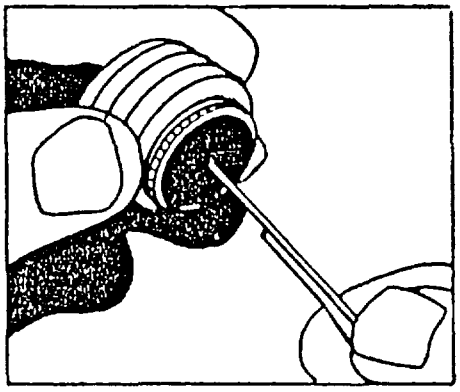

With the rear of connector facing you, lay the wire of contact to be removed along the slot of removal half (White) of the tool, leaving about ½" from the end of the tool to the rear of the connector.

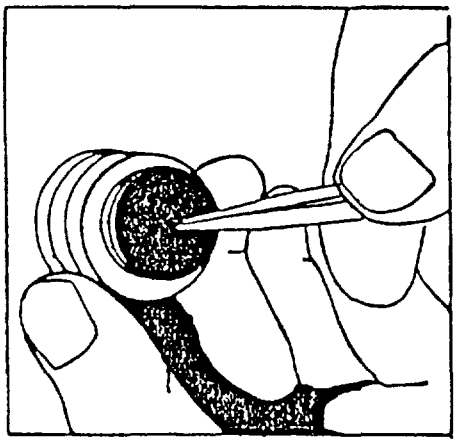

Squeeze the wire hard into the tool between the thumb & forefinger about ¼" from the tip and at the same time quickly pull the connector away from the tool with the other hand

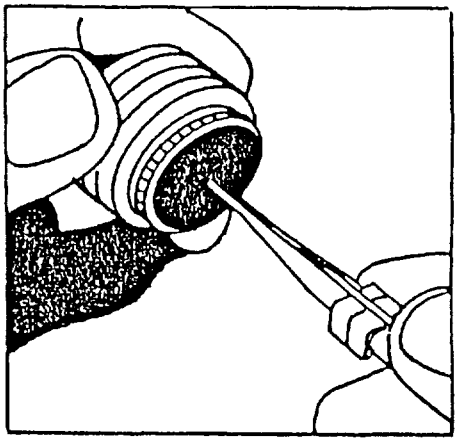

The wire will now have snapped into place Slide the tool down over the wire and into the rear seal and push it slowly into the connector until a positive resistance is felt At this time, the contact retaining clip is in the unlock position.

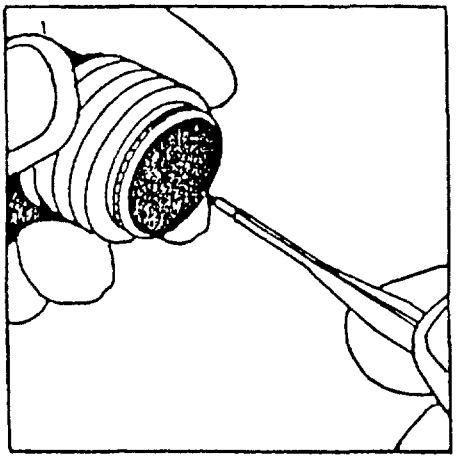

Press the wire of the contact to be removed against the serrations of the plastic tool and pull both the tool and the contact—wire assembly out of the connector.

CAUTION: DO NOT TIP, SPREAD OR ROTATE TOOL WHILE IN CONNECTOR !!

FIGURE 16 Plastic tools instructions - Continued

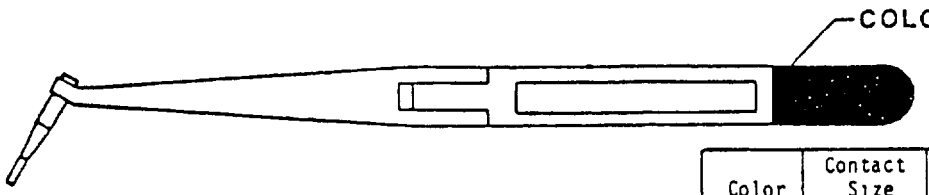

Installing Tool:

Color	Contact Size	Part No.
Yellow	12	M81969/8-09
Blue	16	M81969/8-07
Red	20	M81969/8-05
Brown	22	M81969/8-03
Black	22D,22M	M81969/8-01

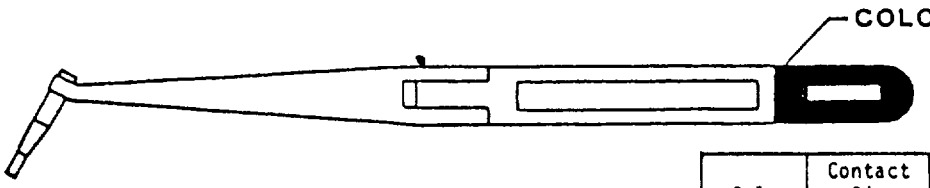

Removal Tool:

Color	Contact Size	Part No.
Yellow	12	M81969/8-10
Blue	16	M81969/8-08
Red	20	M81969/8-06
Brown	22	M81969/8-04
Black	22D,22M	M81969/8-02

To install contacts
1 Open the tool tips by squeezing the handles and slip the tips around the wire insulation (position 1, Configuration A) Slide tool along the wire until tip ends butt against the shoulder on the contact (position 2, Configuration A)
2 Carefully push the contact forward and directly in line with the grommet hole until contact is felt to snap into position (Configuration B)
3. Slide the tool back along the wire insulation until it clears the grommet and remove tool from wire.

To remove contacts
1 Open the tool tips sufficiently to be placed around the wire insulation Slide the tool down the wire until tool tips enter the grommet and come to a positive stop (Configuration B) A slight increase in resistance will be noticed just before the tips bottom This will spread the retention clip and release its hold on the contact
2 Holding the tool tip firmly against the positive stop on the contact, grip the wire and simultaneously remove the tool, contact and wire.

Caution!!!
The tips on installing and removal
tools used on small contacts (i e M81969/8-01
and M81969/8-02) have very thin wall sections.
This causes them to have sharp edges which can cut
the wire insulation or connector sealing grommet.
Do not squeeze, spread, tip or rotate the
tweezer while entering the connection grommet

FIGURE 17. Tweezer type installing and removal tools for rear release connectors.

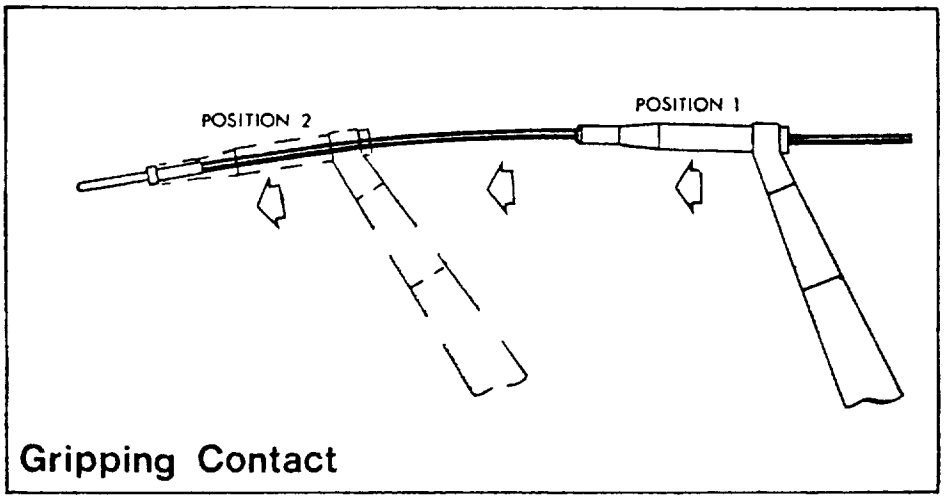

Configuration
A

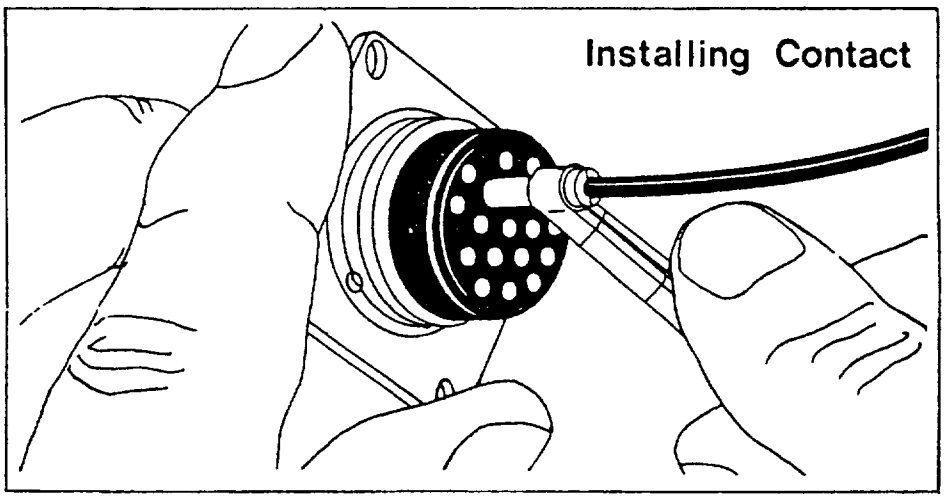

Configuration
B

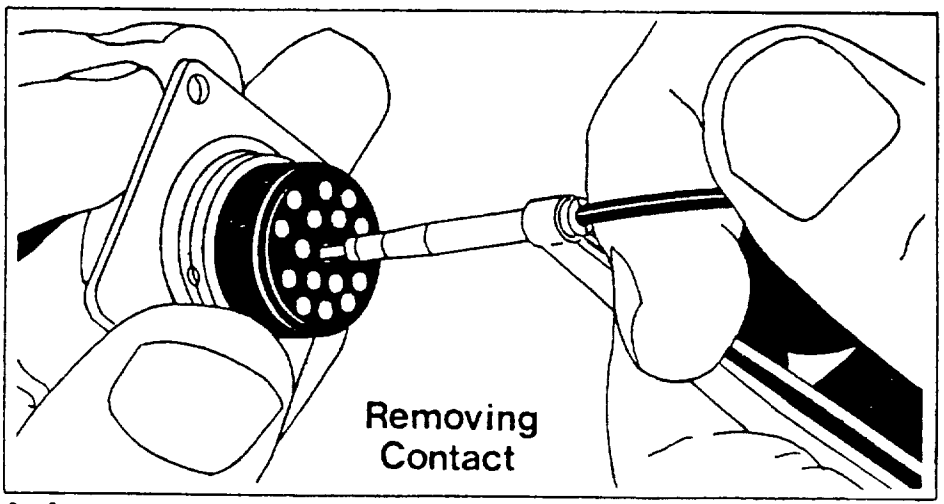

Configuration
C

FIGURE 17 Tweezer type installing and removal tools for rear release connectors - Continued

THE WIRE STRIPPERS ARE NOT ADJUSTABLE. IF, AFTER EXTENDED USE, THEY DO NOT PERFORM SATISFACTORILY, THE BLADES MUST BE REPLACED. THE REPLACEMENT BLADE PART NUMBER IS ETCHED ON THE BLADE, I E. L-5562, 45-1608-1, ETC.

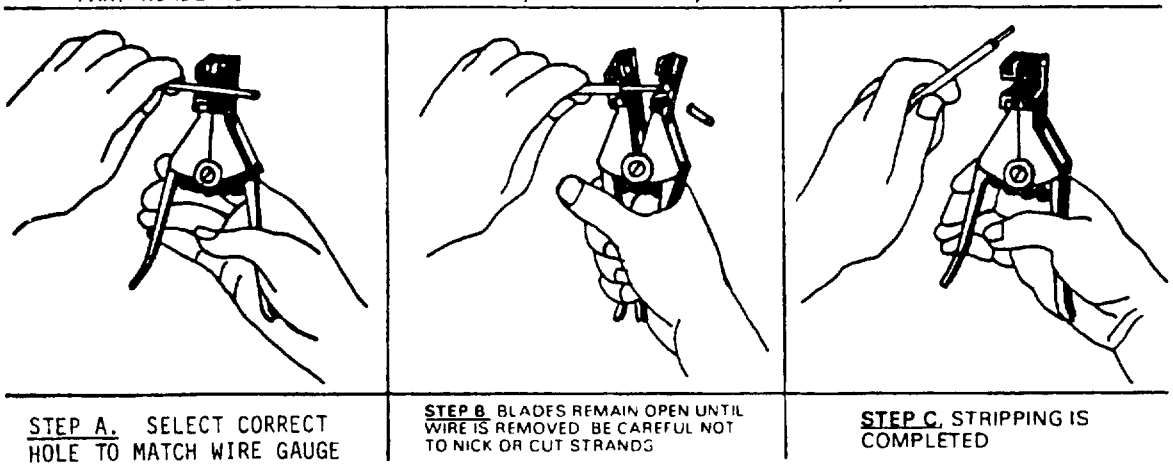

STEP A. SELECT CORRECT HOLE TO MATCH WIRE GAUGE

STEP B. BLADES REMAIN OPEN UNTIL WIRE IS REMOVED BE CAREFUL NOT TO NICK OR CUT STRANDS

STEP C. STRIPPING IS COMPLETED

WIRE STRIPPERS

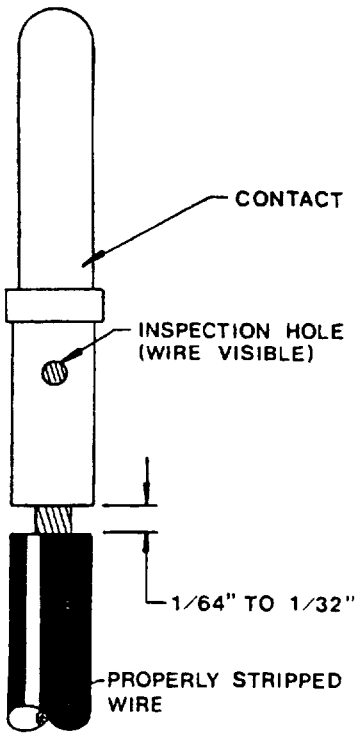

FIG. A

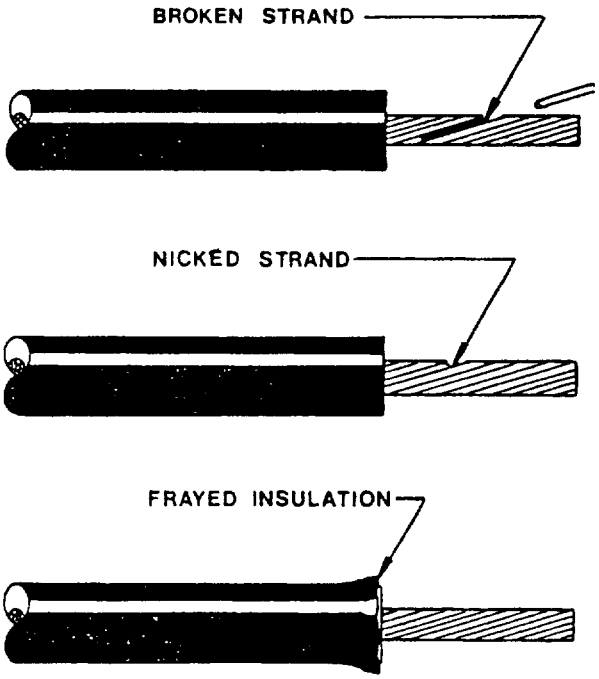

THE CONDITIONS SHOWN ABOVE ARE NOT ACCEPTABLE

FIG. B

FIGURE 18. Wire stripper instructions

THIS KIT CONTAINS THE NECESSARY CRIMPING TOOLS, INSTALLING TOOLS, INSTALLING TOOLS, AND REMOVAL TOOLS FOR ON089560, ON089560, ON089561 AND MIL-C-83723 CONNECTORS

ASSEMBLY INSTRUCTIONS FOR SHIELDED CONTACTS (COAX)
SAME FOR MALE AND FEMALE

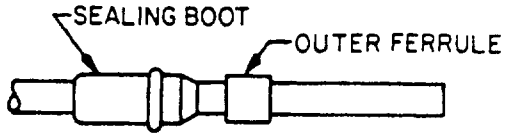

STEP 1
INSTALL SEALING BOOT AND SLIDE OUTER FERRULE ONTO CABLE, AS SHOWN, PRIOR TO STRIPPING CABLE

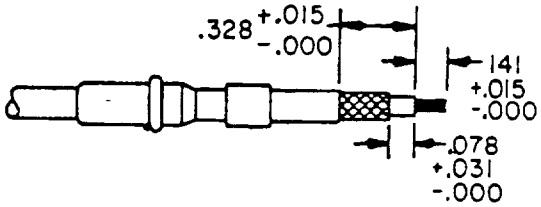

STEP 2
STRIP CABLE JACKET, BRAID AND DIELECTRIC TO DIMENSIONS INDICATED. ALL CUTS ARE TO BE SQUARE AND SHARP -IMPORTANT-DO NOT NICK BRAID, DIELECTRIC OR CENTER CONDUCTOR WHEN CUTTING. IF WIRE ENDS OF CENTER CONDUCTOR FRAY, TWIST THEM TO THEIR NORMAL LAY.

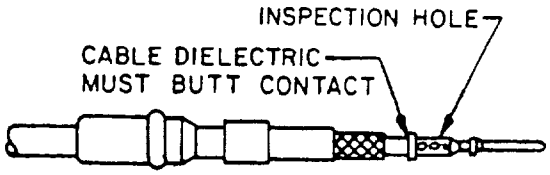

STEP 3
PLACE STRIPPED CENTER CONDUCTOR INTO CONTACT UNTIL CABLE DIELECTRIC BUTTS CONTACT AND END OF WIRE SHOWS THROUGH INSPECTION HOLE (ARROW). INSERT CONTACT INTO CRIMP TOOL UNTIL FULLY SEATED IN POSITIONER CRIMP WITH ONE FULL STROKE. SEE CHART BELOW FOR CRIMP TOOL SETTING.

CRIMP ON CENTER CONTACT			
CABLE	TOOL	POSITIONER	SETTING
RG180B/U	M22520/2-01	M22520/2-24	NO 5

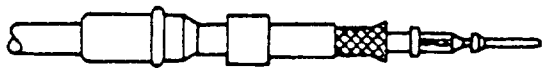

STEP 4
FLARE OUT SLIGHTLY, ENDS OF WIRE BRAID TO FACILITATE INSERTIONS ON INNER FERRULE OF BODY ASSEMBLY (DO NOT COMB OUT WIRE BRAID).

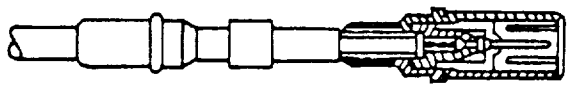

STEP 5
INSTALL CENTER CONTACT IN BODY ASSEMBLY AND SLIDE INNER FERRULE UNDERNEATH WIRE BRAID AS SHOWN. CENTER CONTACT SHALL BE INSERTED UNTIL IT IS LOCKED IN PLACE IN BODY ASSEMBLY. A 3 LB. MIN. 5 LB. MAX. PULL SHALL BE EXERTED ON CABLE TO ENSURE THAT THE CONTACT IS SECURELY LOCKED IN PLACE.

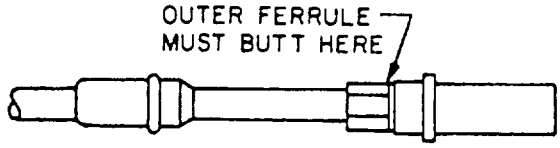

STEP 6
SLIDE OUTER FERRULE OVER WIRE BRAID AND UP AGAINST BODY ASSEMBLY AS SHOWN NO SLACK SHALL EXIST IN WIRE BRAID. CRIMP OUTER FERRULE WITH M22520/10-01 BASIC TOOL AND M22520/10-06 DIE

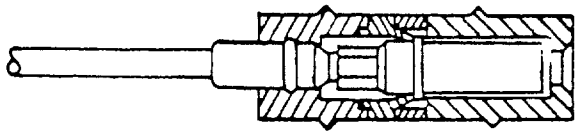

STEP 7
THE SHIELDED CONTACT NOW ASSEMBLED SHALL BE INSERTED INTO THE CONNECTOR ASSEMBLY USING ON089564 INSTALLING TOOL. PUSH SEALING BOOT FORWARD INTO GROMMET OF CONNECTOR UNTIL O-RING RISER OF THE BOOT HAS EFFECTED ITS SNAP-IN SEAL. THE INSTALLATION OF THE SHIELDED CONTACT IS THEN COMPLETED FOR REMOVING CONTACT FROM CONNECTOR USE ON089565 REMOVAL TOOL.

FIGURE 19 Crimping tools, installing tools, and removal tools

THIS KIT CONTAINS THE NECESSARY CRIMPING TOOLS, INSTALLING TOOLS, INSTALLING TOOLS, AND REMOVAL TOOLS FOR ON089560, ON089560, ON089561 AND MIL-C-83723 CONNECTORS

PROCEDURE FOR CONTACTS (TWISTED PAIR)
SAME FOR MALE AND FEMALE (MALE NOT SHOWN)

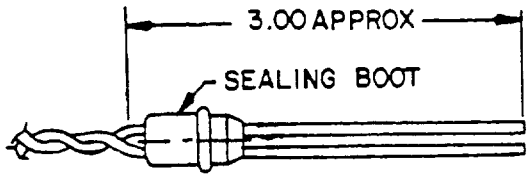

STEP 1
INSTALL SEALING BOOT ONTO THE UNTWISTED WIRE, AS SHOWN, PRIOR TO STRIPPING WIRES

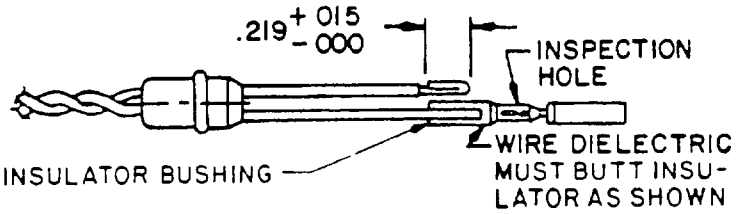

STEP 3
1 FOLD LONGER STRIPPED WIRE TO .219 DIMENSION SHOWN
2 PLACE INSULATOR AND CONTACT ONTO SHORTER STRIPPED WIRE AS SHOWN.
3 WIRE CENTER CONDUCTOR MUST BE VISIBLE THRU CONTACT INSPECTION HOLE (ARROW)
4 SET SELECTOR NUMBER 7 ON M22520/2-01 BASIC TOOL WITH M22520/2-24 POSITIONER
5 INSERT CONTACT INTO CRIMP TOOL UNTIL FULLY SEATED IN POSITIONER
6 CRIMP WITH ONE FULL STROKE

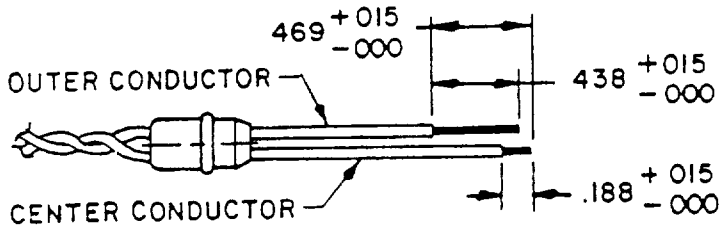

STEP 2
STRIP WIRES TO DIMENSIONS INDICATED ALL CUTS ARE TO BE SQUARE AND SHARP DO NOT NICK CONDUCTORS DURING STRIPPING OF INSULATION

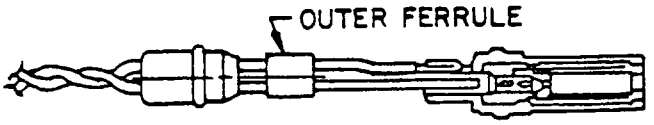

STEP 4
SLIDE OUTER FERRULE ONTO CABLE AS SHOWN PRIOR TO INSTALLING CENTER CONTACT IN BODY ASSEMBLY POSITION FOLDED WIRE ON TOP OF INNER FERRULE AS SHOWN. CENTER CONTACT SHALL BE INSERTED UNTIL IT IS LOCKED IN PLACE IN BODY ASSEMBLY. A 3 LB. MIN. 5 LB MAX PULL SHALL BE EXERTED ON CABLE TO ENSURE THAT THE CONTACT IS SECURELY LOCKED IN PLACE.

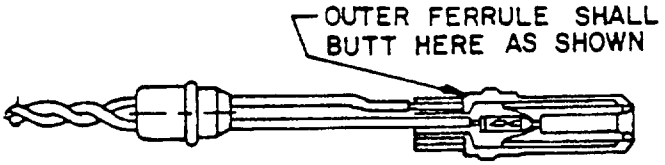

STEP 5
SLIDE OUTER FERRULE OVER FOLDED WIRE AGAINST BODY ASSEMBLY AS SHOWN. CRIMP OUTER FERRULE WITH M22520/10-01 BASIC TOOL AND M22520/10-06 DIE.

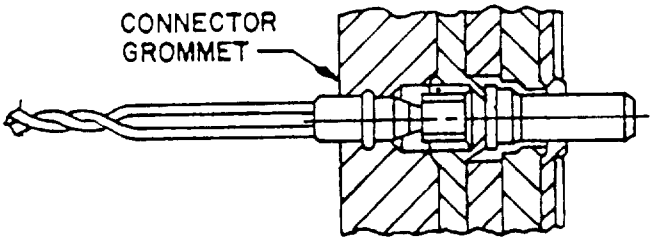

STEP 6
THE SHIELDED CONTACT NOW ASSEMBLED SHALL BE INSERTED INTO THE CONNECTOR ASSEMBLY USING ON089564 INSTALLING TOOL. PUSH SEALING BOOT FORWARD INTO THE GROMMET UNTIL O-RING RISER OF THE BOOT HAS EFFECTED ITS SNAP-IN SEAL. THE INSTALLATION OF THE SHIELDED CONTACT IS NOW COMPLETED. FOR REMOVING CONTACT FROM CONNECTOR USE ON089565 REMOVAL TOOL

FIGURE 19 Crimping tools, installing tools, and removal tools - Continued

ASSEMBLY INSTRUCTIONS FOR IMPROVED SERIES BNC CONNECTORS

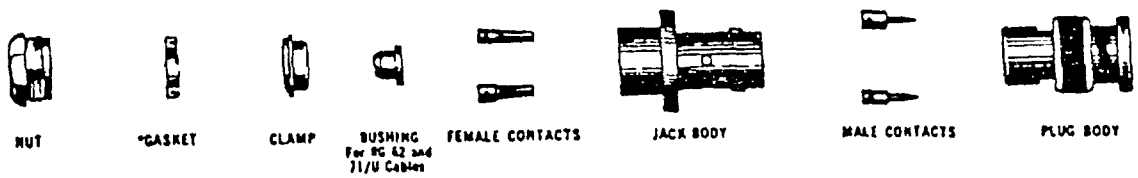

*(CROSS SECTION VIEWS)

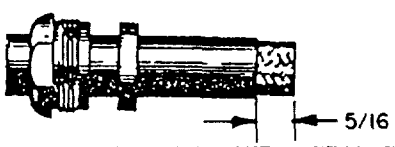	Place nut and gasket, with "V" groove toward clamp, over cable and cut jacket to dimension shown.
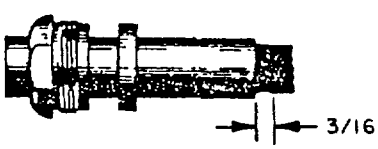	Comb out braid and fold out. Cut cable dielectric to dimension shown. Tin center conductor, using minimum amount of heat.
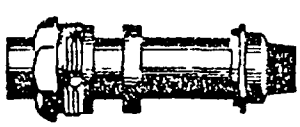	Pull braid wires forward and taper toward center conductor. Place clamp over braid and push back against cable jacket. A non-contaminating type of plastic tape may be used to hold the braided wires in the tapered position while parts are placed in position over the jacket.
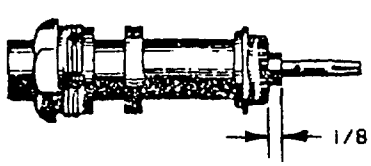	Fold back braid wires as shown, trim to proper length and form over clamp as shown. For RG-62 and 71 U type cable add bushing. Solder contact to center conductor, avoiding excessive heat which might swell cable dielectric.
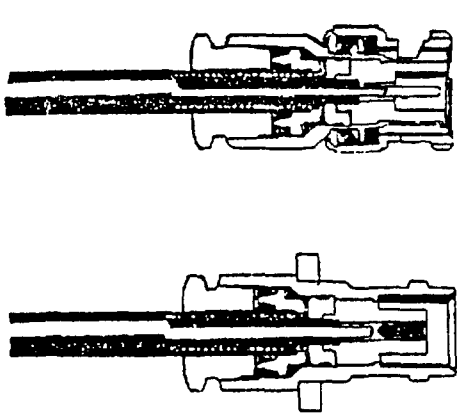	Insert prepared cable termination into connector body. Make sure sharp edge of clamp seats properly in gasket. Tighten nut.

FIGURE 20 Assembly instructions for improved series BNC connectors

TOOL SELECTION CHART

Vendor (code) connector series and type	Basic connector part number	Contact part number	PIN or SKT	Color bands 1st	Color bands 2nd	Color bands 3rd	BIN code	Contact size Mating end	Contact size Wire (barrel)	Wire range or cable	Contact gauge	Crimp tool	Turret head, positioner or die	Installing tool	Removal tool	Removal tool for unwired contacts	Appendix reference number
Military standard MIL-C-5015 "3450" series Threaded coupling Rear release contacts	(Size 4 only) MS3459KT32-17( )	M39029/29-215	P	Red ---	Bro ---	Gre --	215 ---	4	4	4-6	---	M22520/5-01	Y551	None required	M81969/29-03	---	1
	MS3450( ) MS3451( ) MS3452( ) MS3459( )	M39029/30-221	S	Red ---	Red --	Bro ---	221 ---										
		M39029/29-213	P	Red ---	Bro ---	Ora ---	213 ---	12	12	12-14	CG12	M22520/1-01	M22520/1-02 (Yellow)	M81969/14-04	M81969/14-01	M81969/30-07	---
		M39029/30-219	S	Red ---	Bro ---	Whi --	219 --										
		M39029/29-212	P	Red ---	Bro ---	Red - -	212 ---	16	16	16-20	CG16	M22520/1-01	M22520/1-02 (Blue)			M81969/30-06	---
		M39029/30-218	S	Red ---	Bro ---	Gra ---	218 ---										
		M39029/30-217	S 1/	Red ---	Bro ---	Vio ---	217 ---										
MIL-T-7928 Insulated terminals and splices	MS25036-( ) M7928/1-( ) M7928/2-( ) M7928/4-( )	Insulated terminals	- -	---	---	---	---	Yellow		12-10	---	M22520/5-01		---	---	---	---
								Blue		16-14							
	MS25181-( )	Insulated splices						Red		22-18			M22520/5-100				
	M7928/3-( ) M7928/5-( )	Insulated splices	---	---	---	---	---	Yellow		12-10	---	M22520/5-01		---	---	---	---
								Blue		16-14							
								Red		22-18							
								Clear		24-20							
								Yellow		26-24			M22520/5-101				

1/ These contacts used in "S" connectors only Example MS3451L16S-5( )

TOOL SELECTION CHART

Vendor (code) connector series and type	Basic connector part number	Contact part number	PIN or SKT	Color Bands 1st	2nd	3rd	BIN code	Contact size Mating end	Wire barrel	Wire range or cable	Contact gauge	Crimp tool	Turret head, positioner or die	Installing tool	Removal tool	Removal tool for unwired contacts	Appendix reference number
MIL-C-25955	MS24236F21-30( ) MS24234( )	030-1208-000	P					20	20	20-24							
(ITT Cannon -71468)	MS24235( )	031-0769-000	S	---	---	---	---				CG20	M22520/5-01	Y560	036069-0000	036069-0000	036069-0000	---
Circular	MS24236( )	030-1209-011	P					20	26	26-30							
Threaded coupling	MS24237( )																
Front release coupling	MS24238( )		S														
MIL-C-38999	(Size 20 only) MS27467T23A53( )	M39029/58-364	P	Ora	Blu	Yel	364										
Series I				---	---	---	---	16	16	16-20	CG16	M22520/1-01	M22520/1-04 (Blue)	M81969/8-07	M81969/8-08	DRK 105 (Blue)	---
(Scoop-proof)	MS27466( ) MS27467( ) MS27468( )	M39029/56-352	S	Ora	Gre	Red	352										
Circular	MS27496( ) MS27498( )			---	---	---	---										
Bayonet coupling	MS27505( ) MS27515( ) MS27652( )	M39029/58-363	P	Ora	Blu	Ora	363					M22520/1-01 or M22520/2-01	M22520/1-04 (Red) M22520/2-10	M81969/8-05	M81969/8-06	DRK 105 (Red)	---
Rear release contacts	MS27653( ) MS27654( ) MS27656( ) MS27661( ) MS27662( )	M39029/56-351	S	Ora	Gre	Bro	351	20	20	20-24	CG20						
		M39029/58-360	P	Ora	Blu	Bla	360						M22520/2-09				
		M39029/56-348	S	Ora	Yel	Gra	348	22	22D[1/]	22-28			M22520/2-07				
		M39029/58-361	P	Ora	Blu	Bro	361				CG 22	M22520/2-01		M81969/8-01	M81969/8-02	DRK 105 (Yellow)	---
		M39029/56-349	S	Ora	Yel	Whi	349	22	22M	24-28			M22520/2-09				
		M39029/60-367	P	Ora	Blu	Vio	367						M22520/2-07				
		M39029/59-366	S	Ora	Blu	Blu	366										
								8	8	Cable group A	---	Inner contact: Solder; Outer ferrule: M22520/5-01	M22520/5-05 (B)	None required	11-9170 or 114008	---	2

1/ Contacts with 22D" suffix are interchangeable with 22M types and are preferred for use
Cable group A RG180/u, RG195/u, Microdot 293-3922

TOOL SELECTION CHART

Vendor (code) connector series and type	Basic connector part number	Contact part number	PIN or SKT	Color bands 1st	2nd	3rd	BIN code	Contact size Mating end	Contact size Wire barrel	Wire range or cable	Contact gauge	Crimp tool	Turret head, positioner or die	Installing tool	Removal tool	Removal tool for unwired contacts	Appendix reference number
MIL-C-38999 (continued)	(Size 20 only) MS27473E10B5 ( )	M39029/58-364	P	Ora	Blu	Yel	364	16	16	16-20	CG16	M22520/1-01	M22520/1-04 (Blue)	M81969/8-07	M81969/8-08	DRK 105 (Blue)	
Series II	MS27473E18B32( )			---	---	---	---										
	MS27473T12A98( )																
Low silhouette	MS27473T18B32( )	M39029/57-358	S	Ora	Gre	Gra	358										
				---	---	---	---										
Circular	(Size 22D only) MS27473E12B35( )																
Bayonet coupling	MS27473E16A35( )	M39029/58-363	P	Ora	Blu	Ora	363	20	20	20-24	CG20	M22520/1-01 or M22520/2-01	M22520/1-04 (Red) M22520/2-10	M81969/8-05	M81969/8-06	DRK 105 (Red)	---
	MS27473E20B35( )			---	---	---	---										
	MS27473T20B35( )																
	MS27473T24A35( )																
Rear release contacts	(Size 22M only) MS27473E10A13( )	M39029/57-357	S	Ora	Gre	Vio	357										
				---	---	---	---										
	MS27472( )																
	MS27473( )	M39029/58-360	P	Ora	Blu	Bla	360										
	MS27474( )												M22520/2-09				
	MS27479( )			---	---	---	---	22	22D[1]	22-28							
	MS27480( )																
	MS27481( )	M39029/57-354	S	Ora	Gre	Yel	354						M22520/2-06				
	MS27484( )																
	MS27497( )			---	---	---	---				CG22	M22520/2-01		M81969/8-01	M81969/8-02	DRK 105 (Yellow)	---
	MS27499( )																
	MS27500( )	M39029/58-361	P	Ora	Blu	Bro	361						M22520/2-09				
	MS27504( )																
	MS27508( )			---	---	---	---	22	22M	24-28							
	MS27513( )																
	MS27664( )	M39029/57-355	S	Ora	Gre	Gre	355						M22520/2-06				
	MS27667( )			---	---	---	---										
MIL-C-39012 Coaxial-RF	BNC-plug M39012/16-0502	Inner contact M39012/16-11	P	Yel	Blu	---	---	---	---	RG180/u or RG195/u	---	M22520/1-01	M22520/1-12 (Blue)	---	---	---	3
		Outer ferrule M39012/16-50	---	---	---	---	---					M22520/5-01	M22520/5-05 (B)				
BNC* series		Inner contact M39012/16-10	P	Yel	Red	---	---	---	---	RG142/u or RG400/u	---	M22520/1-01	M22520/1-12 (Blue)	---	---	---	
Bayonet coupling	M39012/16-0503	Outer ferrule M39012/16-51	---	---	---	---	---					M22520/5-01	M22520/5-05 (A)				
150- 250 O D range	M39012/16/0504	Inner contact M39012/16-10	p	Yel	Red	---	---	---	---	RG58/u	---	M22520/1-01	M22520/1-12 (Blue)	---	---	--	
		Outer ferrule M39012/16-52	---	---	---	---	---					M22520/5-01	M22520/5-05 (A)				
	BNC-receptacle M39012/19-0502	Inner contact M39012/19-11	P	Blu	Blu	---	---	---	---	RG180/u or RG195/u	---	M22520/1-01	M22520/1-12 (Red)	---	---	---	
		Outer ferrule M39012/19-50	---	---	---	---	---					M22520/5-01	M22520/5-05 (B)				

1/ Contacts with "-22D" suffix are interchangeable with "-22M" types and preferred for use

TOOL SELECTION CHART

Vendor (code) connector series and type	Basic connector part number	Contact part number	PIN or SKT	Color bands 1st	2nd	3rd	BIN code	Contact size Mating end	Wire barrel	Wire range or cable	Contact gauge	Crimp tool	Turret head, positioner or die	Installing tool	Removal tool	Removal tool for unwired contacts	Appendix reference number
MIL-C-39012 (Continued)	BNC-receptacle M39012/19-0503	Inner contact M39012/19-10	S	Blu	Red	---	---	---	---	RG142/u or RG400/u	---	M22520/1-01	M22520/1-12 (Red)	---	---	---	
		Outer ferrule M39012/19-51	---	---	---	---	---					M22520/5-01	M22520/5-05 (A)				
	M39012/19-0504	Inner contact M39012/19-10	S	Blu	Red	---	---	---	---	RG58/u	---	M22520/1-01	M22520/1-12 (Red)	---	---	---	
		Outer ferrule M39012/19-52	---	---	---	---	---					M22520/5-01	M22520/5-05 (A)				
	BNC-right angle plug M39012/20-0503	Inner contact M39012/20-10	P	Vio	Red	---	---	---	---	RG142/u or RG400/u	---	M22520/1-01	M22520/1-12 (Green)	---	---	---	
		Outer ferrule M39012/20-51	---	---	---	---	---					M22520/5-01	M22520/5-05 (A)				3
	M39012/20-0504	Inner contact M39012/20-10	P	Vio	Red	---	---	---	---	RG58/u	---	M22520/1-01	M22520/1-12 (Green)	---	---	---	
		Outer ferrule M39012/20-52	---	---	---	---	---					M22520/5-01	M22520/5-05 (A)				
"TNC" series Threaded coupling 150- 250 O D range	TNC-straight plug M39012/26-0502	Inner contact M39012/26-11	P	Yel	Blu	---	---	---	---	RG180/u	---	M22520/1-01	M22520/1-12 (Blue)	---	---	---	
		Outer ferrule M39012/26-50	---	---	---	---	---					M22520/5-01	M22520/5-05 (B)				
	M39012/26-0503	Inner contact M39012/26-10	P	Yel	Red	---	---	---	---	RG142/u or RG400/u	---	M22520/1-01	M22520/1-12 (Blue)	---	---	---	
		Outer ferrule M39012/26-51	---	---	---	---	---					M22520/5-01	M22520/5-05 (A)				
	M39012/26-0504	Inner contact M39012/26-10	P	Yel	Red	---	---	---	---	RG58/u	---	M22520/1-01	M22520/1-12 (Blue)	---	---	---	
		Outer ferrule M39012/26-52	---	---	---	---	---					M22520/5-01	M22520/5-05 (A)				
	TNC receptacle M39012/28-0502	M39012/28-11	S	Blu	Blu	---	---	---	---	RG180/u	---	M22520/1-01	M22520/1-12 (Red)	---	---	---	
		M39012/28-50	---	---	---	---	---					M22520/5-01	M22520/5-05 (B)				
"SC" series threaded coupling 300- 550 O D range	M39012/39-0009	Inner contact	---	---	---	---	---	---	---	RG115/u	---	M22520/5-01	M22520/5-25 (B)	---	---	---	4
		Outer ferrule	---	---	---	---	---						M22520/5-25 (A)				

TOOL SELECTION CHART

Vendor (code) connector series and type	Basic connector part number	Contact part number	PIN or SKT	Color bands 1st	2nd	3rd	BIN Code	Contact size Mating end	Wire barrel	Wire range or cable	Contact gauge	Crimp tool	Turret head, positioner or die	Installing tool	Removal tool	Removal tool for unwired contacts	Appendix reference number
MIL-C-81511 Series 4 Circular Bayonet coupling Rear release contacts	(Size 23-22 or 23-28 only) M81511/56FA01( ) M81511/50( ) M81511/51( ) M81511/52( ) M81511/53( ) M81511/55( ) M81511/56( ) M81511/57( )	M39029/16-167	P	Bro	Blu	Vio	167	23	22	22-26	---	M22520/2-01	M22520/2-13	M81969/16-04	M81969/16-04	M81969/30-01	---
		M39029/16-166		Bro	Blu	Blu	166	23	28	28-32							
		M39029/18-177	S	Bro	Vio	Vio	177	23	22	22-26							
		M39029/18-176		Bro	Vio	Blu	176	23	28	28-32							
MIL-C-81703 Series 2 Circular Push-pull coupling Front release contacts	(Size 20 only) MS3140E37-50( ) MS3147E3-50 ( ) MS3147E7-50 ( ) MS3147E12-50( ) MS3147E19-50( ) MS3147E27-50( ) MS3147E37-50( )	M39029/31-240	P	Red	Yel	Bla	240	20	20	20-24	CG20	M22520/1-01 or M22520/2-01	M22520/1-02 (Red) M22520/2-02	M81969/17-03	M81969/19-09	M81969/19-09	5
		M39029/31-223		Red	Red	Ora	223										
		M39029/32-259	S	Red	Gre	Whi	259										
	(Size 12 only) M3147E19-7( ) MS3140( ) MS3144( ) MS3147( ) MS3148( ) MS3445( )	M39029/32-242		Red	Yel	Red	242										
		M39029/31-228	P	Red	Red	Gra	228	16	16	16-20	CG16	M22520/1-01	M22520/1-02 (Blue)	M81969/17-04	M81969/19-08	M81969/19-08	
		M39029/32-247	S	Red	Yel	Vio	247										
		M39029/31-234	P	Red	Ora	Yel	234	12	12	12-14	CG12		M22520/1-02 (Yellow)	M81969/17-05	M81969/19-07	M81969/19-07	
		M39029/32-253	S	Red	Gre	Ora	253										

TOOL SELECTION CHART

Vendor (code) connector series and type	Basic connector part number	Contact part number	PIN or SKT	Color bands 1st	2nd	3rd	BIW code	Contact size Mating end	Wire barrel	Wire range or cable	Contact gauge	Crimp tool	Turret head positioner or die	Installing tool	Removal tool	Removal tool for unwired contacts	Appendix reference number
MIL-C-83723 Series I and/or MIL-C-26482 Series II Circular Bayonet coupling Rear release contacts	M83723/01( ) or MS3470( )S( ) M83723/02( ) or MS3470( )P( ) M83723/03( ) or MS3472( )S( ) M83723/04( ) or MS3472( )P( ) M83723/05( ) or MS3474( )S( ) M83723/06( ) or MS3474( )P( ) M83723/07( ) or MS3471( )S( ) M83723/13( ) or MS3476( )S( ) M83723/14( ) or MS3476( )P( )	M39029/4-113 or M83723-33812	P	Bro	Bro	Ora	113	12	12	12-14	CG12	M22520/1-01	M22520/1-02 (Yellow)	M81969/14-04	M81969/14-04	M81969/30-07	---
		M39029/4-118 or M83723-34812	S	Bro	Bro	Gra	113										
		M39029/4-114	P	Bro	Bro	Yel	114	12	16	16-20							
		M39029/5-119	S	Bro	Bro	Whi	119										
		M39029/4-111 or M83723-33816	P	Bro	Bro	Bro	111	16	16		CG16		M22520/1-02 (Blue)	M81969/14-03	M81969/14-03	M81969/30-06	---
		M39029/5-116 or M83723-34816	P	Bro	Bro	Blu	116										
		M39029/4-112	P	Bro	Bro	Red	112	16	20								
		M39029/5-117	S	Bro	Bro	Vio	117										
		M39029/4-110 or M83723-33820	P	Bro	Bro	Bla	110	20	20	20-24	CG20	M22520/1 01 or M22520/2-01	M22520/1-02 (Red) M22520/2-02	M81969/14-02	M81969/14-02	M81969/30-05	---
		M39029/5-115 or M83723-34820	S	Bro	Bro	Gre	115										
		M39029/7-001	P	Bro	Red	Blu	126	12 (Shielded)	12	Cable group A		Inner contact M22520/2-01	M22520/2-27	M81969/14-04	M81969/14-04	M81969/30 07	6
		M39029/8-001	S	Bro	Red	Whi	129										
		M39029/7-002	P	Bro	Red	Vio	127			Cable group B							
		M39029/8-002	S	Bro	Ora	Bla	130					Outer ferrule M22520/5-01	M22520/5 06				
		M39029/7-003	P	Bro	Red	Gra	128			Cable group C							
		M39029/8-003	S	Bro	Ora	Bro	131										
		M39029/9-132 through 136	P	---	---	--	132-136	20	20	20-24	CG20	M22520/1-02 or M22520/2-02	M22520/1 02 or M22520/2-02	M81969/14-02		M81969/30-05	7
		M39029/9-514 through 518	P	---	---	--	514-518	16	16	16-20	-	M22520/1-01 or 422520/7-01	M22520/1-02 or M22520/7-03	M81969/14-03		M81969/30 06	
		M39029/10-138 through 142	S	---	---	--	138-142	20	20	20-24	---	M22520/2-01 or M22520/1-01	M22520/2-02 or M22520/1-02	M81969/14-02		M81969/30 05 (Red)	
		M39029/10-519 through 523	S	---	---	---	519-523	16	16	16-20	---	M22520/1-01 or M22520/7-01	M22520/1-02 or M22520/7-03	M81969/14-03		M81969/30-06 (Blue)	

TOOL SELECTION CHART

Vendor (code) connector series and type	Basic connector part number	Contact part number	PIN or SKT	Color bands 1st	2nd	3rd	BIN code	Contact size Mating end	wire barrel	Wire range or cable	Contact gauge	Crimp tool	Turret head, positioner or die	Installing tool	Removal tool	Removal tool for unwired contacts	Appendix reference number
MIL-C-83723 Series I Circular Bayonet coupling Prewired assemblies	M83723/36( ) M83723/37( ) M83723/38( ) M83723/39( ) M83723/40( ) M83723/41( )	Connectors are permanently assembled as a unit and are not serviceable, they must be replaced as a unit	P	---	---	---	---	20	20	20-24	CG20	---	---	---	---	---	---
			S														
MIL-C-5015 Series II Circular Threaded coupling Rear release contacts	MS3451 MS3450 MS3452 MS3456 MS3459	M39029/29-216 or M83723/29I0 or MS3162-0-0	P	Red	Bro	Blu	216	0	0	0-2	---	---	Not supplied	None required	(Not supplied) M81969/29-04	---	---
				---	---	---	---										
		M39029/30-222 or M83723/30I0 or MS3163-0-0	S	Red	Red	Red	222										
				---	---	---	---										
		M39029/29-215 or M83723/29I4 or MS3162-4-4	P	Red	Bro	Gre	215	4	4	4-6	---	M22520/5-01	Y560		M81969/29-03		
				---	---	---	---										
		M39029/30-221 or M83723/30I4 or MS3163-4-4	S	Red	Red	Bro	221										
				---	---	---	---										
		M39029/29-214 or M83723/29I4 or MS3162-8-8	P	Red	Bro	Yel	214	8	8	8-10	---		Not supplied		(Not supplied) M81969/29-02		
				---	---	- -	---										
		M39029/30-220 or M83723/30I8 or MS3163-8-8	S	Red	Red	Bla	220										
				---	---	---	---										
		M39029/29-213 or M83723/29I12 or MS3162-12-12	P	Red	Bro	Ora	213	12	12	12-14	CG12	M22520/1-01	M22520/1-02 (Yellow)	M81969/14-04	M81969/14-04	M81969/30-07	
				---	---	---	---										
		M39029/30-219 or M83723/30I12 or MS3163-12-12	S	Red	Bro	Whi	219										
				---	---	---	---										
		M39029/29-212 or M83723/29I16 or MS3162-16-16	P	Red	Bro	Red	212	16	16	16-20	CG16		M22520/1-02 (Blue)	M81969/14-03	M81969/14-03	M81969/30-06	
				---	---	---	---										
		M39029/30-218 or M83723/30I16 or MS3163-16-16	S	Red	Bro	Gra	218										
				---	---	---	---										

TOOL SELECTION CHART

Vendor (code) connector series and type	Basic connector part number	Contact part number	PIN or SKT	Color bands 1st	2nd	3rd	BIN code	Contact size Mating end	Wire barrel	Wire range or cable	Contact gauge	Crimp tool	Turret head, positioner or die	Installing tool	Removal tool	Removal tool for unwired contacts	Appendix reference number
MIL-C-83723 Series III Bayonet coupling Rear release contacts	M83723/71( ) M83723/72( ) M83723/73( ) M83723/74( ) M83723/75( ) M83723/76( ) M83723/77( ) M83723/78( ) M83723/84( )	M30929/4-113 or M83723-33812	P	Bro	Bro	Ora	113	12	12	12-14	CG12		M22520/1-02 (Yellow)	M81969/14-04	M81969/14-04	M81969/30-07	---
				---	---	---	---										
		M39029/4-118 or M83723-34812	S	Bro	Bro	Gra	118										
				---	---	---	---										
	M83723/85( ) M83723/86( ) M83723/87( ) M83732/91( ) M83723/92( )	M39029/4-114	P	Bro	Bro	Yel	114	12	16	16-20		M22520/1-01					
		M39029/5-119	S	Bro	Bro	Whi	119										
	M83723/95( ) M83723/96( ) M83723/97( ) M83723/98( )	M39029/4-111 or M83723-33816	P	Bro	Bro	Bro	111	16	16		CG16		M22520/1-02 (Blue)	M81969/14-03	M81969/14-03	M81969/30-06	---
				---	---	--	---										
		M39029/5-116 or M83723-34816	P	Bro	Bro	Blu	116										
				---	--	---	---										
		M39029/4-112	P	Bro	Bro	Red	112	16	20								
		M39029/5-117	S	Bro	Bro	Vio	117										
		M39029/4-110 or M83723-33820	P	Bro	Bro	Bla	110	20	20	20-24	CG20	M22520/1-01 or M22520/2-01	M22520/1-02 (Red) M22520/2-02	M81969-14 02	M81969/14-02	M81969/30-05	---
				---	---	--	---										
		M39029/5-115 or M83723-34820	S	Bro	Bro	Gre	115										
				---	---	---	---										
		M39029/7-126	P	Bro	Red	Blu	126	12 (Shielded)	12	Cable group A		Inner contact M22520/2-01	M22520/2-27	M81969/14-04	M81969/14-04	M81969/30-07	6
		M39029/8-129	S	Bro	Red	Whi	129										
		M39029/7-127	P	Bro	Red	Vio	127			Cable group B		Outer ferrule M22520/5-01	M22520/5-06				
		M39029/8-130	S	Bro	Ora	Bla	130										
		M39029/7-128	P	Bro	Red	Gra	128			Cable group C							
		M39029/8-131	S	Bro	Ora	Bro	131										
		M39029/9-132 through 136	P					20 (Thermocouple)	20	20-24	CG20	M22520/1-01	M22520/1-02 (Red)	M81969/14-02	M81969-14-02	M81969-30-05	---
		M39029/10-138 through 142	S														

Cable group A RG178/u, RG196/u, 28 AWG, 30 AWG
Cable group B RG174/u, RG188/u, 26 AWG
Cable group C 24 AWG

MIL-C-83723/1 USAF

TOOL SELECTION CHART

Vendor (code) connector series and type	Basic connector part number	Contact part number	PIN or SKT	Color bands 1st	2nd	3rd	BIN code	Contact size Mating end	Wire barrel	Wire range or cable	Contact gauge	Crimp tool	Turret head, positioner or die	Installing tool	Removal tool	Removal tool for unwired contacts	Appendix reference number
DOD specification ON089562 AIMS" series Rectangular Rear release contacts	ON089559 ON089560 ON089561 Amphenol "94" series 94-818-5	M39029/4-111 or M83723/33B16	P	Bro	Bro	Bro	111	16	16	16-20	CG16	M22520/1-01	M22520/1-02 (Blue)	M81969/14-03	M81969/14-03	M81969/30-06	---
		M39029/5-116 or M83723/34B16	S	Bro	Bro	Blu	116										
		M39029/4-110 or M83723/33B20	P	Bro	Bro	Bla	110	20	20	20-24	CG20	M22520/1-01 or M22520/2-01	M22520/1-02 (Red) M22520/2-02	M81969/14-02	M81969/14-02	M89196/30-05	---
		M39029/5-115 or M83723/34B20	S	Bro	Bro	Gre	115										
		Shielded ON089558-1	P	---	---	---	---	8	8		---	Inner contact M22520/2-01	M22520/2-24	ON089564 or 294-540	ON089565 or 294-541	---	See general instruction
		Shielded ON089558-1	S	---	---	---	---					Outer ferrule M22520/5-01	M22520/5-10				
Adams-Russell (11556) Cable assemblies	1538-8135-1 1538-8135-2 1538-8135-4 1538-8135-5	Cable assemblies replaced as a unit															
Amphenol (02660) "48" series Circular Lanyard release Front release contacts	48-7130-1	M39029/31-241 or M39029/32-260	P	Red	Yel	Bro	241	20	20	20-24	CG20	M22520/1-01 or M22520/2-01	M22520/1-02 (Red) M22520/2-02	M81969/17-09	M81969/19-07	M81969/19-07	---
			S	Red	Blu	Bla	260										

TOOL SELECTION CHART

Vendor (code) connector series and type	Basic connector part number	Contact part number	PIN or SKT	Color bands 1st	Color bands 2nd	Color bands 3rd	BIN code	Contact size Mating end	Contact size Wire barrel	Wire range or cable	Contact gauge	Crimp tool	Turret head, positioner or die	Installing tool	Removal tool	Removal tool for unwired contacts	Appendix reference number
Bendix (77820) "JT" series Circular Lanyard release Rear release contacts	91-538139-46T	M39029/58-364 or	P	Ora	Blu	Yel	364	16	16	16-20	CG16	M22520/1-04	M22520/1-04 (Blue)	M81969/8-17	M81969/8-18	DRK 105 (Blue)	---
		MS27494-16		---	---	---	---										
		M39029/58-358 or	S	Ora	Gre	Gra	358										
		MS27492-16		---	---	--	---										
		M39029/58-363 or	P	Ora	Blu	Ora	363	20	20	20-24	CG20	M22520/1-01 or	M22520/1-04 (Red)	M81969/8-05	M81969/8-06	DRK 105 (Red)	---
		MS27494-20		---	--	---	---										
		M39029/58-357 or	S	Ora	Gre	Vio	357					M22520/2-01	M22520/2-10				
		MS27492-20		---	---	---	---										
		(Shielded) M39029/60-367	P	Ora	Blu	Vio	367	8	8	RG180/u or RG195u	---	Inner contact Solder Outer ferrule		None required	114008 or 11-9170	---	2
		(Shielded) M39029/60-366	S	Ora	Blu	Blu	366					M22520/5-01	M22520/5-05 (B)				
"PT" series Circular Bayonet coupling Solder contacts	PT06EB-3P(SR)	Contacts are integral part of connector															
"PT-SE" series (Hi-temp) Circular Bayonet coupling Front release contacts	91-454320-64(P) 91-536314-64(P)	M39029/31-240	P	Red	Yel	Bro	240	20	20	20-24	CG20	M22520/1-01 or M22520/2-01	M22520/1-02 (Red) M22520/2-02	M81969/17-09	M81969/19-09	M81969/19-09	---
		(Shielded) 21-33012-( )		---	- -	---	--	8 or 12	8 or 12	App 8	---	Inner contact Solder Outer ferrule		App 8	App 8	App 8	8
		(Shielded) 21-33038-( )										M22520/5-01					
	91-454320-64(S)	M39029/32-259	S	Red	Gre	Whi	259	20	20	20-24	CG20	M22520/1-01 or M22520/2-01	M22520/1-02 (Red) M22520/2-02	M81969/17-09	M81969/19-09	M81969/19-09	---
		(Shielded) 21-33011-( )		--	---	---	---	8 or 12	8 or 12	App 8	---	Inner contact Solder Outer ferrule		App 8	App 8	App 8	8
		(Shielded) 21-33037-( )										M22520/5-01	Appendix B				

TOOL SELECTION CHART

Vendor (code) connector series and type	Basic connector part number	Contact part number	PIN or SKT	Color bands 1st	2nd	3rd	BIN code	Contact size Mating end	Wire barrel	Wire range or cable	Contact gauge	Crimp tool	Turret head, positioner or die	Installing tool	Removal tool	Removal tool for unwired contacts	Appendix reference number
Bendix Microwave ( ) RF-coaxial "UM" series	Straight plug 5813-1	Inner contact	S	---	---	---	---	---	---	Various	---	Solder		---	---	---	9
		Outer nut	---									Wrench clamp					
Bayonet coupling	Straight plug weatherproof 6486-1	Inner contact	S	---	---	---	---	---	---	RG179/u	---	Solder		---	---	---	
		Internal crimp	---									M22520/5-01	M22520/5-35				
See MIL-C-39012 section for information on replacement connectors and tools		Outer nut	---									Wrench clamp					
"BNC" series Bayonet coupling	Straight plug 30220-1 replace with M39012/16-0503 or									RG142/u or RG400/u							3
See MIL-C-39012 section for information on replacement connectors and tools	M39012/16-0504									RG58/u or RG141/u							
	Receptacle 30517-2 replace with M39012/19-0503 or									RG142/u or RG400/u							
	M39012/19-0504									RG58/u or RG141/u							
	Straight plug 39100-5 replace with M39012/16-0502									RG180/u							
	Right angle plug 39101-2 replace with M39012/20-0503 or									RG142/u or RG400/u							
	M39012/20-0504									RG58/u or RG141/u							
	Receptacle 39103-8 replace with M39012/19-0502									RG180/u							

TOOL SELECTION CHART

Vendor (code) connector series and type	Basic connector part number	Contact part number	PIN or SKT	Color bands 1st	Color bands 2nd	Color bands 3rd	BIN Code	Contact size Mating end	Contact size Wire barrel	Wire range or cable	Contact gauge	Crimp tool	Turret head, positioner or die	Installing tool	Removal tool	Removal tool for unwired contacts	Appendix reference number
Bendix Microwave (Continued) See MIL-C-39012 section for information on replacement connectors and tools	Straight plug 38100-2 Replace with M39012/26-0503 or									RG142/u or RG400/u							
TNC series Bayonet coupling	M39012/26-0504									RG58/u or RG141/u							3
	Straight plug 38100-5 replace with M39012/26-0502									RG180/u							
	Receptacle 38108-16 replace with M39012/28-0502									RG180/u							
"SC" series Threaded coupling	Right angle plug M39012/39-0009									RG115/u							
Burndy (09922) "Hyfen Bantam series Circular Bayonet coupling Front release contacts	M22TAC10XP6NH2 Basic connector part number without contacts	Shielded contacts See appendix reference number 8		--	---	-	--	8	8	Appendix 8	---	Inner contact: M22520/2-01 Outer ferrule: M22520/5-01	Inner contact: K413 Outer ferrule: Appendix 8	None required	DRK 58-8	DRK 58-8	8

TOOL SELECTION CHART

Vendor (code) connector series and type	Basic connector part number	Contact part number	PIN or SKT	Color bands 1st	Color bands 2nd	Color bands 3rd	BIN code	Contact size Mating end	Contact size Wire barrel	Wire range or cable	Contact gauge	Crimp tool	Turret head, positioner or die	Installing tool	Removal tool	Removal tool for unwired contacts	Appendix reference number
ITT Cannon (71468) "DPX" series Rectangular Solder contacts	DPX2F40C1S-F40C1S ( )	330-0144-000	P	---	---	---	---	20	20	20-24	CG20	Solder	---	Connector must be disassembled for contact installation and removal		---	---
		330-0145-000	S														
		Coaxial 249-0702-000	P					8	8	RG180/u or RG195/u	---						
		Coaxial 249-0703-000	S														
"MC" series Circular Threaded coupling Solder contacts	MC11E10-6( ) MC11E13 12( )		P or S	---	---	---	---	20	20	20-24	---	Solder	---	---	---	--	---
Deutsch (11139) "DC-SMA" series RF-coaxial Threaded coupling	DC3-500003 DC4-500004	Inner contact	P	---	---	---	---	---	---	RG180/u or RG195/u		M22520/2-01	K30C	---	---	---	6
		Outer ferrule	---	---	---	---	---	---	---			M22520/5-01	M22520/5-05 (8)				
"DS" series Circular Push-pull coupling Front release contacts	DSO( )-1912( ) DSO( )-27-2( )	800-16/32-2	P	---	---	---	---	16	16	16-20	CG20	M22520/1-01	TH18	M81969/17-04	DRK 51-16	DRK 51-16	---
		800-16/30-2	S	---	---	---	---										

TOOL SELECTION CHART

Vendor (code) connector series and type	Basic connector part number	Contact part number	PIN or SKT	Color bands 1st	2nd	3rd	BIN code	Contact size Mating end	Wire barrel	Wire range or cable	Contact gauge	Crimp tool	Turret head, positioner or die	Installing tool	Removal tool	Removal tool for unwired contacts	Appendix reference number
Kings (91836) RF-coaxial "BNC" series Bayonet coupling	Straight plug KC59-90	Inner contact	P	---	---	---	---	---	---	RG115A/ JTM	--	M22520/5-01	Y117(A)	---	---	---	10 (Code 217A)
		Outer ferrule	---	- -	---	---	---	---	---				Y117(B)				
"C" series	Straight plug KD59-80	Inner contact	P	---	---	---	---	---	---	RG115A/ JTM	---	Solder		---	---	---	
		Outer ferrule	---	---	---	---	---	---	---			M22520/5-01	Y117(B)				
"HN" series	Straight plug KH59-32	Inner contact	P	- -	---	---	---	---	---	RG115A/ JTM	---	Solder		---	---	---	
		Outer ferrule	- -	---	---	- -	---	--	---			M22520/5-01	Y117(B)				
"N" series	Right angle plug KN59-11	Inner contact	P	---	---	---	---	---	---	RG115A/ JTM	---	Solder		---	---	---	11 (Code 1024)
		Outer ferrule	--	--	---	- -	---	---	---			Wrench clamp					
	Straight plug KN59-30	Inner contact	P	---	---	---	---	---	---	RG115A/ JTM	---	M22520/5-01	Y117(A)	---	---	---	10 (Code 213A)
		Outer ferrule	-	---	---	---	---	---	--				Y117(B)				
SC series	Straight plug KG59 13	Inner contact	P	---	---	---	---	---	---	RG115A/ JTM	---	M22520/5-01	Y117(A)	---	---	---	
		Outer ferrule	--	-	---	-	-	--	--				Y117(B)				
	Right angle plug KG59-28	Inner contact	P	---	---	- -	---	---	---	RG69/u	---	Solder		---	-	---	
		Outer ferrule	---	-	--	- -	- -	---	- -			M22520/5-01	M22520/5-25 (A)				
TNC series	Straight plug KA59-13	Inner contact	P	- -	---	- -	---	---	---	RG115A/ u	--	M22520/5 01	Y117(A)	---	---	---	10 (Code 217A)
		Outer ferrule	--	- -	--	---	---	---	--				Y117(B)				
McGraw Edison (80099) Fire detection cable assembly	Drawing/cable numbers 42991 12 42991 180	Cable assemblies replaced as a unit															
Pyle-National (49368) "Phoenix" series Circular Threaded coupling Front release contacts	(Size 16 only) FPSK1312-0JSTJW( ) FPSK1322-19STJE( ) FPK( )	MS24254 20P	P					20	20	20-24	CG20	M22520/1-01 or M22520/72-01	M22520/1-02 (Red) M22520/2-02	M81969/17-09	M81969/19-07	M81969/19-07	
		MS24225-20S	S														
		MS24254-16P	P					16	16	16-20	CG16	M22520/1-01	M22520/1-02 (Blue)	M81969/17-04	M81969/19-08	M81969/19-08	---
		MS24225-16S	S														
		MS24254 12P	P					12	12	12-14	CG12		M22520/1-02 (Yellow)	M81969/17-05	M81969/19 09	M81969/19-09	
		MS24225-12S	S														
		ZZL-4020-1( )	P					20	20	20 24	CG20	M22520/1-01 or M22520/72-01	M22520/1-02 (Red) M22520/2-02	M81969/17-09	M81969/19-07	M81969/19-07	
		ZZL-4120-1( )	S														
		P-205810 16C120	P					16	20		CG16	M22520/1-01	M22520/1-02 (Blue) (Red settings)		M81969/19-08	M81969/19-09	1/
		P20511-16C220	S	--	-	---	--										
		ZZL-4016-1( )	P					16	16	16-20			M22520/1-02 (Blue)	M81969/17-04			
		ZZL-4116-1( )	S														
		ZZL-4012-1( )						12	12	12-14	CG12		M22520/1-02 (Yellow)	M81969/17-08	M81969/19-09	M81969/19-09	
		ZZL-4112-1( )															

1/ Thermocouple contacts

CROSS REFERENCE OF KIT CONTENTS

Part number	NSN National stock no.	FSCM
Crimping tools		
M22520/1-01	5120-00-165-3912	81349
M22520/2-01	5120-00-165-3910	81349
M22520/5-01	5120-00-132-6913	81349
Turret heads		
M22520/1-02	5120-00-016-6392	81349
M22520/1-04	5120-00-016-7582	81349
M22520/1-12	5120-00-036-9220	81349
TH18	5120-00-017-6419	11851
Positioners		
M22520/2-02	5120-00-165-3913	81349
M22520/2-06	5120-00-017-3809	81349
M22520/2-07	5120-00-017-3827	81349
M22520/2-09	5120-00-017-3927	81349
M22520/2-13	5120-00-132-6939	81349
M22520/2-10	5120-00-017-3932	81349
M22520/2-24	5120-00-348-7531	81349
M22520/2-27	5120-00-132-6928	81349
K30C	5120-00-132-9006	11851
K413	5120-00-037-1383	11851
Die sets		
M22520/5-05	5120-00-133-0534	81349
M22520/5-06	5120-00-133-0579	81349
M22520/5-10	5120-00-133-0583	81349
M22520/5-25	5120-00-133-0622	81349
M22520/5-35	5120-00-116-3156	81349
M22520/Y117		11851
M22520/5-100	5120-00-126-0860	81349
Y560		11851
M22520/5-101	5120-00-081-4213	81349
Installing tools		
M81969/8-17	5120-00-018-0529	81349
M81969/8-05	5120-00-177-6967	81349
M81969/8-01	5120-00-251-9503	81349
M81969/17-03	5120-00-079-4598	81349
M81969/17-04	5120-00-079-4599	81349
M81969/17-05	5120-00-079-4600	81349
ON089564	5120-00-432-9540	98230
Removal tools		
M81969/8-08	5120-00-409-5206	81349
M81969/8-06	5120-00-177-6966	81349
M81969/8-02	5120-00-146-6558	81349
M81969/19-07	5120-00-079-4601	81349
M81969/19-08	5120-00-079-4602	81349
M81969/19-09	5120-00-079-9461	81349
DRK-105-HOL		11851
DRK 105-20-1		11851
DRK 105-20M-1		11851
M81969/8-18		81349
JNJ39565	5120-00-432-9545	11851
DRK 58-3	5120-00-359-3745	11851
DRK 51-15	5120-00-858-1454	11851
M81969/30-1	5120-00-133-0351	81349
M81969/29-03	5120-00-133-0153	81349

Part number	NSN National stock no.	FSCM
Removal tools (continued)		
M81969/30	5120-00-104-4066	81349
M81969/30-5	5120-00-148-9843	81349
M81969/30-6	5120-00-148-9844	81349
M81969/30-7	5120-00-148-9845	81349
Installing removal tools		
038069-000	5120-00-446-8256	11851
M81969/14-03	5120-00-915-4588	81349
M81969/14-02	5120-00-018-5325	81349
M81969/14-01	5120-00-018-0575	81349
M81969/14-04	5120-00-157-3138	81349
Gauges		
M22520/3-1	5220-00-165-7604	11851
CG12		11851
CG16		11851
CG20		11851
CG22		11851
Wire strippers		
45-173		30119
45-174	5120-00-918-6131	30119
Wire cutter		
45-123	5120-00-068-2483	30119
Miscellaneous		
9.64 Hex wrench	5120-00-889-2163	08929
Die knock-out pin		11851
Marking pencil		83745
Six inch scale	308	73792

REQUIREMENTS:

Design and configuration: See figures 1 through 4.

Materials:

Case (category 2) (M83521/3-02). Fiberglass with an aluminum frame (Skydyne) part number SK672900-19 or equal), color is olive drab in accordance with FED-STD-595.

Cover and components (M83521/3-02)· Aluminum alloy, clear anodized in accordance with MIL-A-8625.

Instruction sheets and contents charts White vinyl 0.020 inch (0.51 mm) thick.

Insert and retainer pad: Fire retardant foamed polyethylene in accordance with PPP-C-1752, color is optional.

Clasps, handles, hinges, and locking hasp (M83521/3-02)· Suitable plated to resist corrosion.

Nameplate· In accordance with MIL-P-19834.

Cover (M83521/3-02). A retainer pad shall be permanently affixed to the underside with contents chart insert and a latching mechanism shall be provided so that when the cover is closed the tools will be captivated in their respective positions.

Manual air pressure relief valve (M83521/3-01)· Located adjacent to handle. Decal with "Open before airflight", "Close after airflight" shall be attached to case adjacent to valve.

Rubber feet. Provided on the back and bottom of case (see figure 1).

Tool instruction sheets and contents charts. Lettering shall be legible and protected with a transparent coating. (See figures 5 through 20 for M83521/3-02.)

Contents charts: Pressure sensitive adhesive backing, show the insert cavity configurations and respective tool part numbers, a list of NSN's will also be supplied.

M83521/3-02 Centered on inside of top and bottom tool case flyleaf.

Part number:

M83521/3-01. Maintenance kit for A10 aircraft.

M83521/3-02· Maintenance case assembly.

QUALIFICATION·

Qualifying activity. Defense Electronics Supply Center, (DESC-E), Dayton, OH 45444.

Supersession data:

Previous part number	Superseded by
M83507/3-01	M83521/3-01
M83507/3-02	M83521/3-02

Custodian:
Air Force - 85

Review activities
Air Force - 11, 99
DLA - ES

User activity:
Air Force - 19

Preparing activity:
Air Force - 85

Agent:
DLA - ES

(Project 5935-F251)