INCH-POUND
MIL-DTL-83511/5A
w/AMENDMENT 1
19 September 2012
SUPERSEDING
MIL-DTL-83511/5A
11 March 2004

DETAIL SPECIFICATION SHEET

HEADSET-MICROPHONE
H-172A/AIC

This Specification is approved by all Departments
and Agencies of the Department of Defense.

The requirements for acquiring the product described herein shall consist of this specification sheet and MIL-DTL-83511.

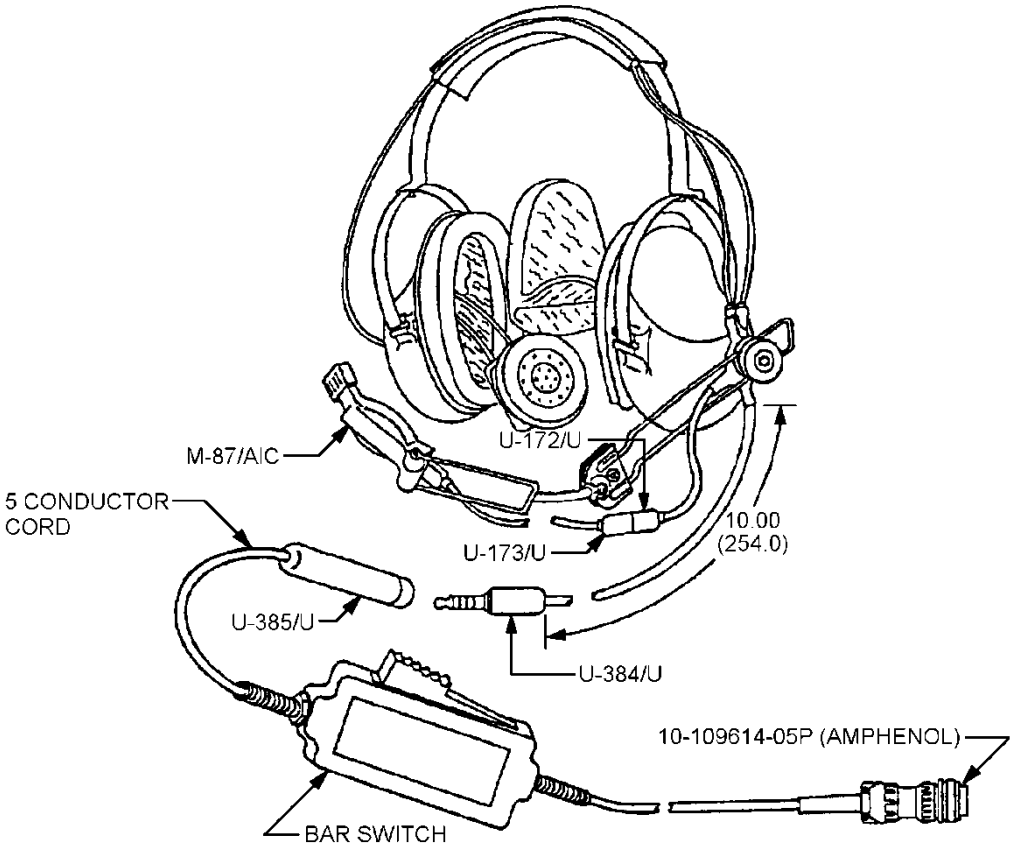

FIGURE 1. Headset-microphone, H-172A/AIC.

TABLE I. Frequency response and variation.

Frequency in Hz	Response (dB)	Variation (dB)
300 - 500	4	2.5
500 - 2,000	4	4
2,000 - 4,500	5	4

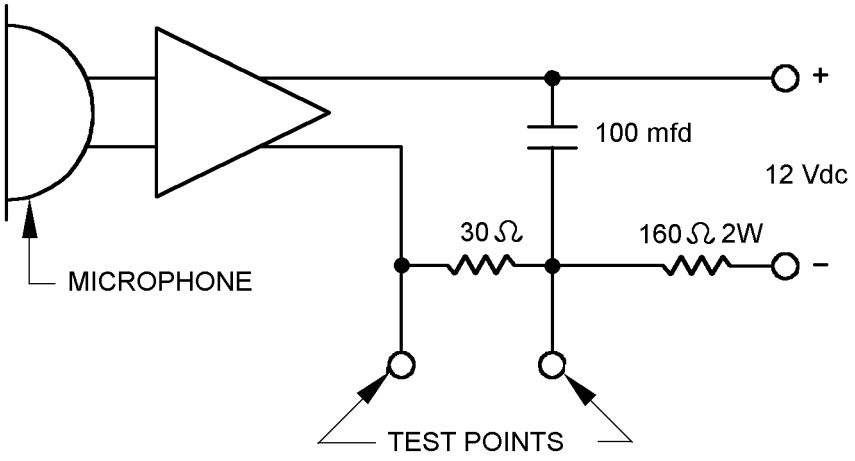

NOTES:

1. Item identification: The headset-microphone H-172A/AIC is a single earphone headset-microphone assembly with a transistorized microphone amplifier located in one earcup, which is perforated to provide ambient listening. The assembly incorporates a quick disconnect cord assembly. The quick disconnect provides a means to attach a switch and cord to the output connector for termination of the headset-microphone assembly.
2. Attachment provisions: The earcup containing the earphone and the earcup containing the transistorized amplifier for the microphone shall be suspended by yokes from the headband, to allow quick adjustment and suitable pressure to the user.

FIGURE 2. Test circuit (microphone amplifier).

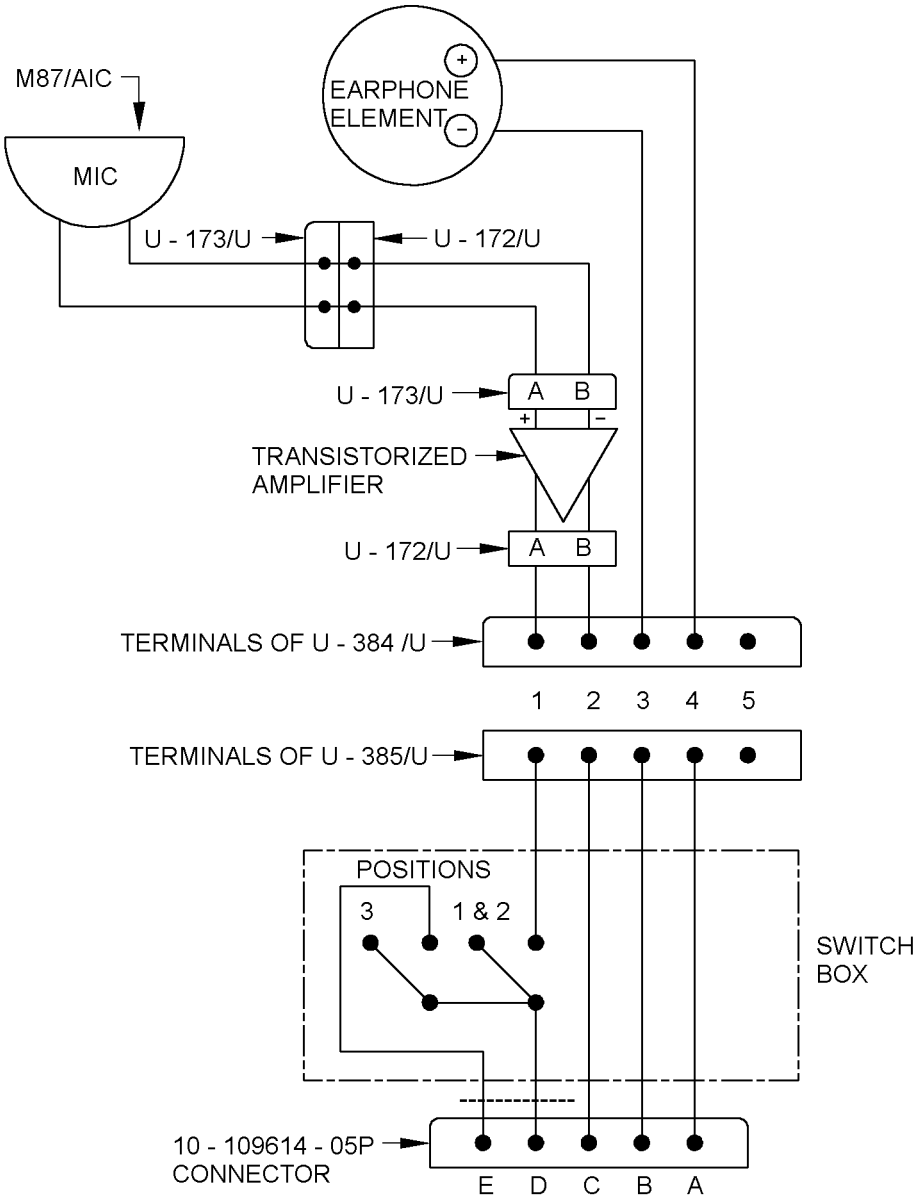

FIGURE 3. Wiring diagram (H-172A/AIC).

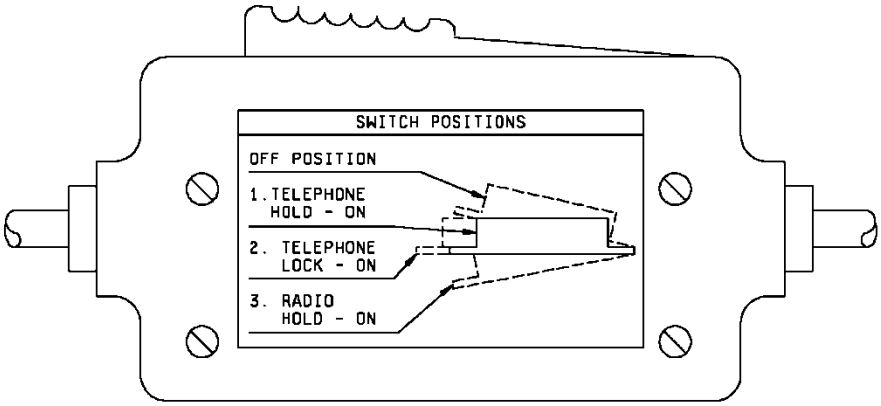

FIGURE 4. Switch.

REQUIREMENTS:

Interface: Figure 1 is for illustration purpose only and all referenced drawings and specifications cover design.

Earphone: One required, “Roanwell Corporation” (CAGE 82872) Part or Identifying Number (PIN) 020-530-002-000 or equal.

General configuration: In accordance with MIL-PRF-83511.

Nominal diameter: 2.00 inches (50.8 mm)

Depth: 0.45 inch (11.4 mm)

Frequency response range: 100 to 4,500 Hz (see table I).

Frequency response: Maximum deviation from dB output ± 3 dB at 1,000 Hz and 600 ohms.

Sensitivity: The sensitivity of the earphone at ground level shall exhibit the characteristics in table II.

TABLE II. Earphone sensitivity.

Frequency range	Decibels (reference level of 20 micropascals [µPA] {0.0002 dynes/cm^2})
100 to 200 Hz	103 to 112
200 to 1,000 Hz	105 to 112
1,000 to 4,500 Hz	103 to 119

Harmonic distortion: The harmonic distortion in the acoustic output of the earphone shall be no more than 5 percent over the audio frequency range of 300 to 3,500 Hz.

Impedance: 600 ± 60 ohms at 1,000 Hz.

Microphone: M-87/AIC, in accordance with MIL-PRF-26542 and MIL-PRF-26542/2.

Microphone boom: 1 required, USAF drawing 67B1854 or equal.

Cord data:
Amplifier to terminal of main cord: 16.00 inches (408.4 mm).
Terminal to U-384/U main cord: 10.00 inches (254.0 mm).
U-385/U to switch: 26.00 inches (660.4 mm).
Switch to connector: 51.00 inches (1295.4 mm).
Specification: MIL-DTL-55668 type 2, 5 conductor tinsel rubber jacket.

Microphone transistorized amplifier.

Operating temperature: The transistorized amplifier shall operate in temperatures between -0 to +50 degrees C.

Output impedance: The output impedance of the amplifier shall be such that it operates satisfactorily into the input microphone circuit of radio control unit C-1138 A/UR or equivalent circuit (test circuit see figure 2).

Frequency response: The output of the microphone amplifier at 1,000 Hz when connected to the test circuit shall be 30 ±5 dB above a zero reference level of one millivolt; the input shall be 2.8 Pascal's (PA) 28 dynes/cm^2 (103 dB relative to 20 µPA [0.0002 dynes/cm^2]) applied 0.25 inch (6.35 mm) from the microphone. A dip between 1,100 and 1,700 Hz not more than 150 Hz wide and not to exceed the lower limits by more than 7.5 dB is allowable.

a. Response variation - After the environmental tests; the microphone amplifier shall not vary more than 4 dB from its initial response at any frequency between 300 and 4,500 Hz.

Intermodulation[1/] distortion: Intermodulation distortion tests shall be performed on the microphone amplifier using two tones at 700 and 1,000 Hz., each tone to be equal in sound pressure levels relative to 20 µPA [0.0002 dynes/cm^2] at the output of the microphone amplifier the total harmonic and intermodulation products shall not be greater than 35 dB below the output level of the total test tones with an input sound pressure level of 103 dB and not greater than 32 dB below the level of the total output test tones with an input sound pressure of 110 dB.

a. Distortion variation: After environmental tests, the variations of harmonics and intermodulation products shall not be greater than 35 dB below the level of test tones with an input of 103 dB and 30 dB below the level of the other test tone inputs with an input of 100 dB.

1/ INTERMODULATION**:** The production in an electrical device of currents having frequencies equal to the sums and differences of frequencies supplied to the device or of their harmonics.

Microphone amplifier: Roanwell Corp. PIN 657-010-002-000 or equal such as AM-3597C/A, as specified in MIL-A-23595/1.

Output impedance: Operates satisfactorily into input microphone circuit of radio control unit C-1138/UR.

Frequency response: 300 to 4,500 Hz.

Wiring schematic: See figure 3.

Bar switch: In accordance with MIL-DTL-83511 and this specification sheet (see figure 4).

Switch and housing:
Type: Bar actuated four-position (to be supplied with clothing clip). Switch is in accordance with Army drawing SM-C-430302 or equal to Astrocom Electronics PIN 10235A.

Switch: The output of the microphone shall be transferred to the output connector by means of a four-position switch. The switch shall be in accordance with Army drawing SM-C-430302 and MIL-DTL-83511. It shall be watertight when assembled, and marked to show the four positions of the bar (see figure 4).

Contact sequence: The switch shall provide operation in the following sequence:

a. Position “0” Switch not depressed, off position.
b. Position “1” Closed halfway, non-locking for “push-to-talk” telephone.
c. Position “2” Closed halfway, pushed forward, for “lock-on” telephone.
d. Position “3” Closed all the way, non-locking for radio.

Switch details: The switch mechanism shall be made as follows:

a. Position “0”: Without any pressure at all on the switch, the contact gap of 0.020-inch (0.51 mm) minimum.
b. Position “1” and “2”: The open contact shall have a gap of 0.015 inch (0.38 mm), minimum; the closed contact shall develop a pressure of 15 grams, minimum, and have a contact resistance not over 0.05 ohm.
c. Position “3”: Both contacts shall be closed, and the total pressure developed shall be 25 grams, minimum. The individual contact resistance shall not be over 0.05 ohm.
d. Position “1” and “2”: The force required to maintain these positions when exerted on the flat part of the bar, at the beginning of the radius, shall be from 1 (one) to 2 (two) pounds.
e. Position “3”: The force required to maintain this position shall be from 1 (one) to 2 ½ (two and one-half) pounds.
f. Insulation resistance: The insulation resistance, as measured with 500 volts, alternating current, rms, between any open contacts, terminals, or other metallic parts shall be no less than 10 megohms.
g. Life test: The switch shall withstand 200,000 operating cycles.

Clothes clip: Roanwell Corp. PIN 20860 or equal, in accordance with MIL-DTL-83511. The clothes clip shall be of the alligator design, and be provided with corrugated rubber jaws. The pressure developed at the tip when the jaws are parallel to each other shall be from three to four pounds.

Test for clothes clip pressure: The pressure developed between the tips of the jaws, when parallel, shall be determined in any manner, and using any equipment, which is capable of effecting this measurement with no more than ten percent error.

Interchangeability: This headset-microphone assembly is interchangeable and replaces navy type H-172/U headset-microphone assembly.

Qualification. The activity responsible for qualification of products delivered in accordance with this specification sheet is Defense Supply Center Columbus (DSCC-VQP), 3990 East Broad Street, Columbus, Ohio 43218-3990 vqp.do@dla.mil, or vqp.go@dla.mil. Information pertaining to qualification of products may be obtained from that activity. Qualification of product on the basis of similarity may be considered at the discretion of the qualifying activity on a case by case basis.

Amendment notations. The margins of this specification sheet are marked with vertical lines to indicate modifications generated by this amendment. This was done as a convenience only and the Government assumes no liability whatsoever for any inaccuracies in these notations. Bidders and contractors are cautioned to evaluate the requirements of this document based on the entire content, irrespective of the marginal notations.

Referenced documents. In addition to MIL-DTL-83511, this document references the following:

MIL-A-23595/1
MIL-PRF-26542
MIL-PRF-26542/2
MIL-DTL-55668
Army drawing SM-C-430302
USAF drawing 67B1854

CONCLUDING MATERIAL

Custodians:
Army - CR
Navy - EC
Air Force - 85
DLA - CC

Review activities:
Navy - MC
Air Force - 99

Preparing activity:
DLA - CC

(Project 5965-2012-020)

NOTE: The activities listed above were interested in this document as of the date of this document. Since organizations and responsibilities can change, you should verify the currency of the information above using the ASSIST Online database at https://assist.dla.mil.