INCH-POUND

MS27627B
22 October 2009
SUPERSEDING
MS27627A
29 September 2000

DETAIL SPECIFICATION SHEET

ELBOW, FLARED, TUBE TO HOSE, 90º, SWIVEL NUT

This specification is approved for use by all Departments and Agencies of the Department of Defense.

The requirements for acquiring the product described herein shall consist of this specification sheet and MIL-DTL-83296.

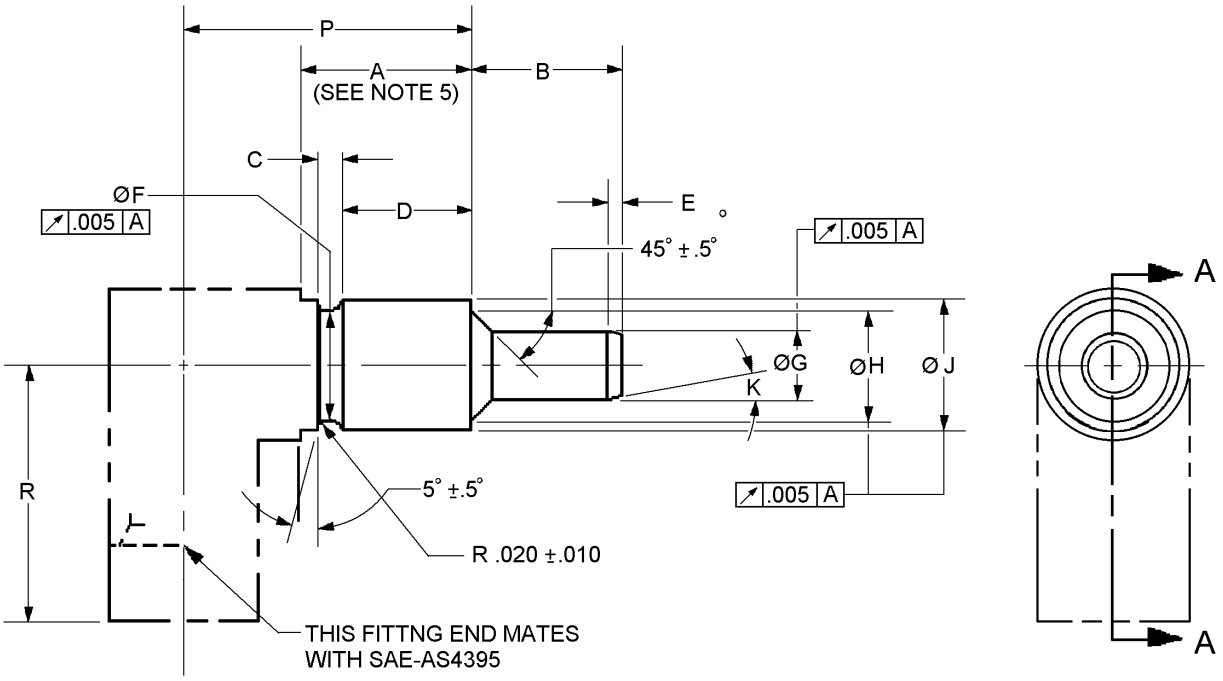

Inches	mm
.005	0.13
.010	0.25
.020	0.51
.025	0.66

FIGURE 1. Elbow, flared, 90°, dimensions and configuration.

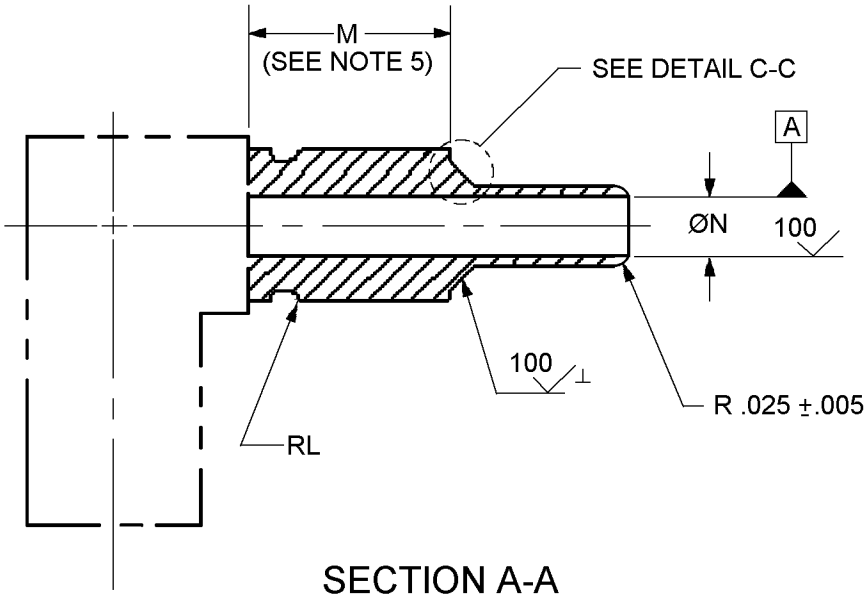

SECTION A-A

Inches	mm
.005	0.13
.025	0.66

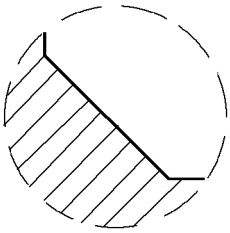

DETAIL C-C

-6 SIZE ONLY

FIGURE 1. Elbow, flared, 90°, dimensions and configuration - Continued.

Part or Identifying Number (PIN)	A min (see note 5) inch (mm)	B ±.010 (0.25) inch (mm)	C inch (mm)		D +.005 -.000 (+0.13) inch (mm)	E ±.005 (0.13) inch (mm)	F +.000 -.005 (-0.13) inch (mm)
MS27627-4C	.633 (16.08)	.550 (13.97)	.116 (2.95)	±.010 (0.25)	.413 (10.49)	-	.346 (8.79)
MS27627-6C	.709 (18.01)	.620 (15.75)	.140 (3.56)	±.020 (0.51)	.442 (11.23)	-	.395 (10.03)
MS27627-8C	.779 (19.79)	.737 (18.72)			.472 (11.99)	-	.564 (14.33)
MS27627-10C	.660 (16.76)	1.050 (26.67)	.170 (4.32)		.405 (10.29)	.150 (3.81)	.679 (17.25)

PIN	G +.000 -.005 (-0.13) inch (mm)	H ±.005 (0.13) inch (mm)	J ±.003 (0.08) inch (mm)	K ±.5º	L ±.004 (0.10) inch (mm)	M min inch (mm)
MS27627-4C	.250 (6.35)	.420 (10.67)	.443 (11.25)	-	.040 (1.02)	.578 (14.68)
MS27627-6C	.343 (8.71)	-	.497 (12.62)	-	.047 (1.19)	.654 (16.61)
MS27627-8C	.445 (11.30)	.610 (15.49)	.680 (17.27)	-		.692 (17.58)
MS27627-10C	.588 (14.94)	.762 (19.35)	.823 (20.90)	10º	.062 (1.57)	.606 (15.39)

PIN	N ±.005 (0.13) inch (mm)	P inch (mm)		R inch (mm)	
MS27627-4C	.161 (4.09)	.970 (24.64)	±.020	.705 (17.91)	±.020 (0.51)
MS27627-6C	.271 (6.88)	1.088 (27.64)		.836 (21.23)	
MS27627-8C	.375 (9.53)	1.304 (33.12)		.980 (24.89)	
MS27627-10C	.465 (11.81)	1.434 (36.42)	±.035	1.176 (29.87)	±.035 (0.89)

FIGURE 1. Elbow, flared, 90º, dimensions and configuration - Continued.

NOTES:
1. Dimensions are in inches.
2. Metric equivalents are given for information only.
3. Unless otherwise specified, tolerances for three place decimals are ±.005 inch (0.13 mm).
4. Dimensioning and tolerancing are in accordance with ASME Y14.5M.
5. On -4, -6, and -8 sizes, dimension A shall be used when the adjacent diameter to the left of plane B-B is greater than dimension J. When the adjacent diameter is equal to or less than dimension J, dimension M may be used in place of dimension A.
8. All burrs and slivers shall be removed.

FIGURE 1. Elbow, flared, 90°, dimensions and configuration - Continued.

REQUIREMENTS:

Dimensions and configurations: The design, construction, and physical dimensions shall be in accordance with MIL-DTL-83296 and figure 1, in case of conflict between this specification sheet and MIL-DTL-83296, this specification sheet shall govern.

This is a design specification sheet for manufacturing purposes. The item is only procured as an integral part of adapter assembly MS27621.

This part for use with MIL-DTL-83298 hose and hose assemblies in accordance with MIL-DTL-32330.

Material: Material shall be a corrosion resistant steel (CRES), class 304 in accordance with SAE-AMS5639, 304L in accordance with SAE-AMS5647, 316 in accordance with SAE-AMS5648, or 321 in accordance with SAE-AMS5645, or condition A (accepted classes only), in accordance with ASTM A276.

Any forged design fitting is acceptable for -4, -6, and -8 sizes. Any bent tube design fitting is acceptable for -10 size.

Finish: Finish shall be passivated in accordance with MIL-DTL-83296.

PIN example:

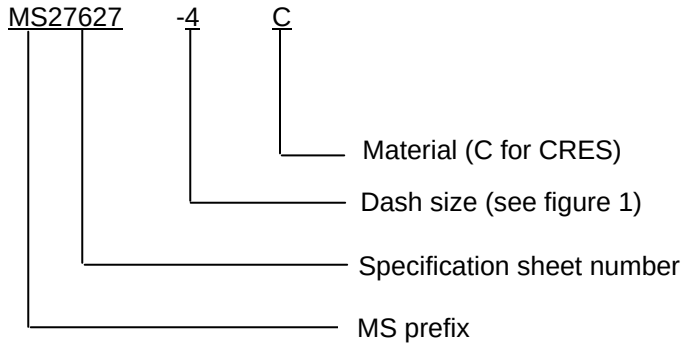

PIN example: MS27627-4C indicates a 90° elbow 1/4 inch, CRES.

Changes from previous issue. Marginal notations are not used in this revision to identify changes due to the extent of the changes.

Referenced documents. In addition to MIL-DTL-83296, this document references the following:

MIL-DTL-83298	SAE-AS4395
MIL-DTL-32330	SAE-AMS5639
MS27621	SAE-AMS5645
ASME Y14.5M	SAE-AMS5647
ASTM A276	SAE-AMS5648

CONCLUDING MATERIAL

Custodians:
Army - AV
Navy - AS
Air Force - 99
DLA - CC

Review activities:
Navy - MC, SA
Air Force - 71

Preparing activity:
DLA - CC

(Project 4730-2008-057)

NOTE: The activities listed above were interested in this document as of the date of this document. Since organizations and responsibilities can change, you should verify the currency of the information above using the ASSIST Online database at http://assist.daps.dla.mil.