INCH-POUND

MIL-DTL-641/20B
15 November 2013
SUPERSEDING
MIL-J-641/21A
12 November 1993

DETAIL SPECIFICATION SHEET

JACKS, (BANTAM) TELEPHONE, 3 CONDUCTOR, TRIPLE

This specification is approved for use by all Departments and Agencies of the Department of Defense.

The requirements for acquiring the product described herein shall consist of this specification sheet and MIL-DTL-641.

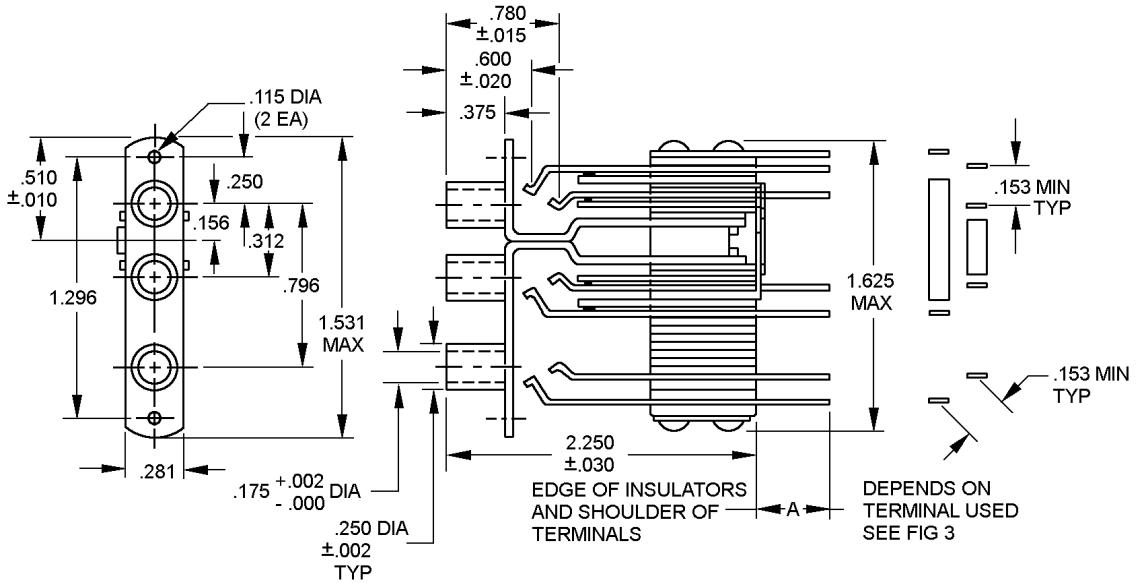

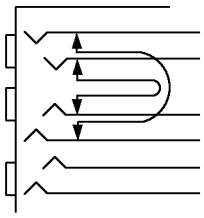

CIRCUIT DIAGRAM

Dash numbers -1 and -2 (4 breaks connected and monitor)

FIGURE 1. Dimensions and configurations.

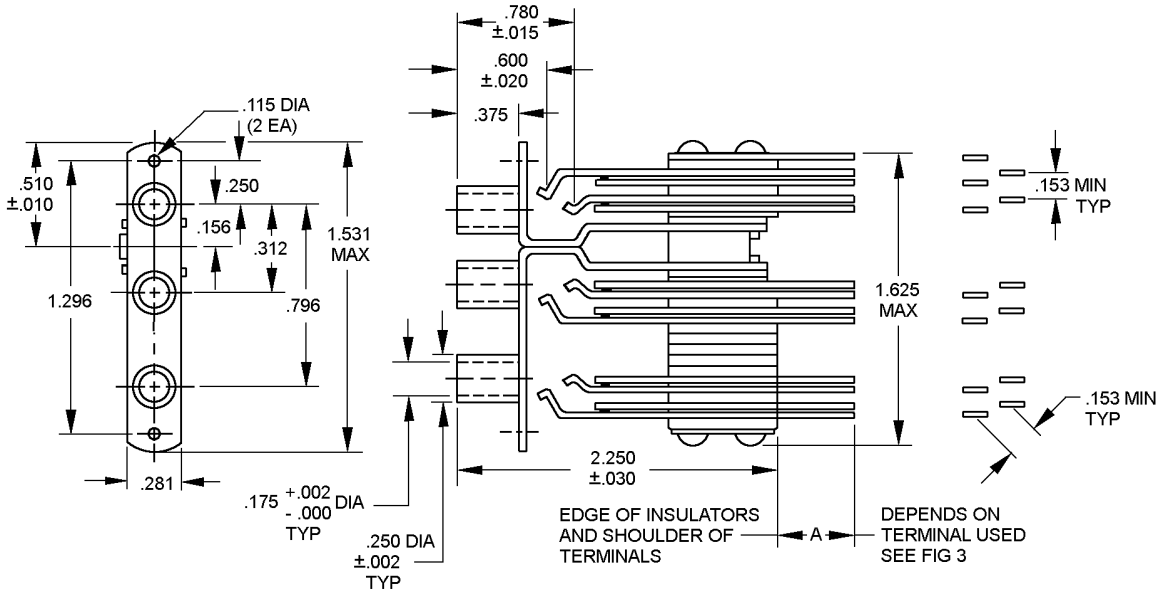

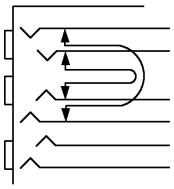

CIRCUIT DIAGRAM

Dash numbers -3 and -4 (6 breaks)

FIGURE 1. Dimensions and configurations – Continued.

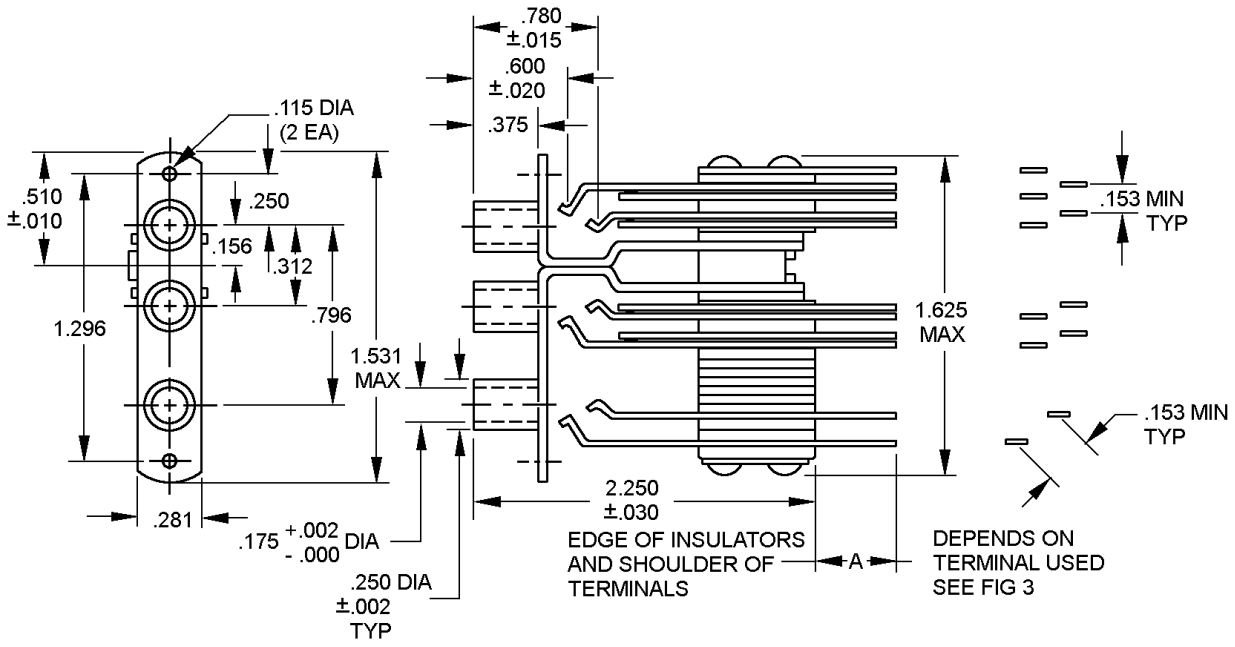

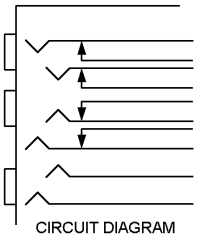

Inches	mm	Inches	mm	Inches	mm
.002	0.05	.156	3.96	.600	15.24
.010	0.25	.175	4.44	.780	19.81
.015	0.38	.250	6.35	.796	20.22
.020	0.51	.281	7.14	1.296	32.92
.030	0.76	.312	7.92	1.531	38.89
.115	2.92	.375	9.53	1.625	41.28
.153	3.89	.510	12.95	2.250	57.15

Dash numbers -5 and -6 (4 breaks and monitor)

NOTES:
1. Dimensions are in inches.
2. Metric equivalents are given for information only.
3. All dimensions are after plating.
4. Wire shunts are permitted.
5. All undimensioned pictoral features are for reference purposes only.
6. For wirewrap type jacks, terminal and contact interconnecting jumpers shall not interfere with commonly used wirewrap tools.

FIGURE 1. Dimensions and configurations – Continued.

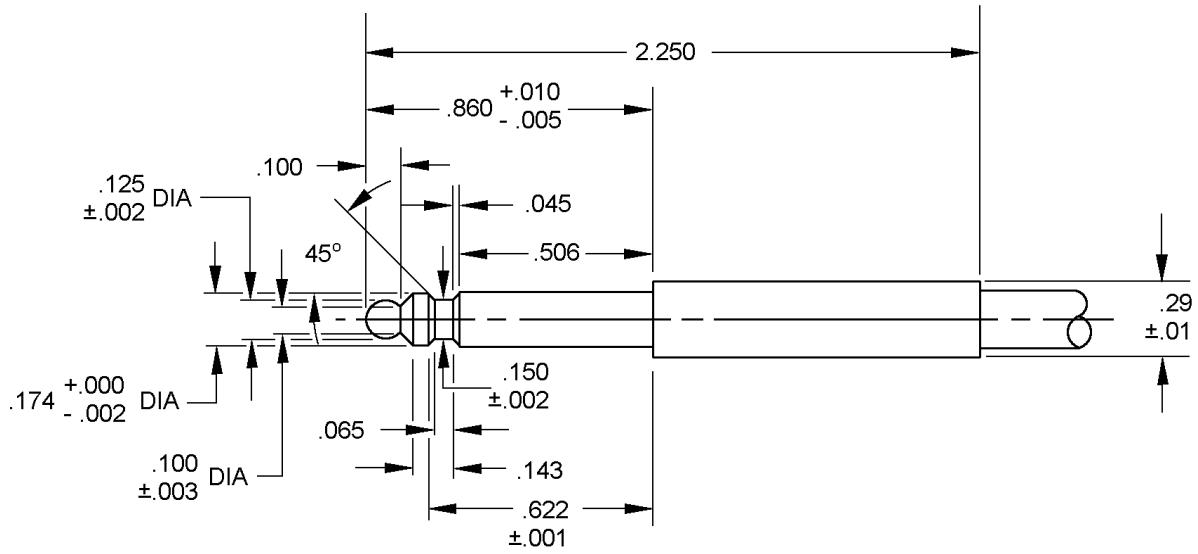

Inches	mm	Inches	mm	Inches	mm
.001	0.03	.065	1.65	.290	7.4
.002	0.05	.100	2.54	.506	12.85
.003	0.08	.125	3.18	.622	15.80
.005	0.13	.143	3.63	.860	21.84
.010	0.25	.150	3.81	2.250	57.15
.045	1.14	.174	4.42		

1. Dimensions are in inches.
2. Metric equivalents are given for information only.
3. All dimensions are after plating.
4. Finger shall be hardened to Rockwell C 60-62, polished, and then hard-chromium plated to .0003 inch (0.008 mm) maximum thickness.
5. Concentricity shall be .003 (0.08 mm) total indicator reading.

FIGURE 2. Test plug TP-777.

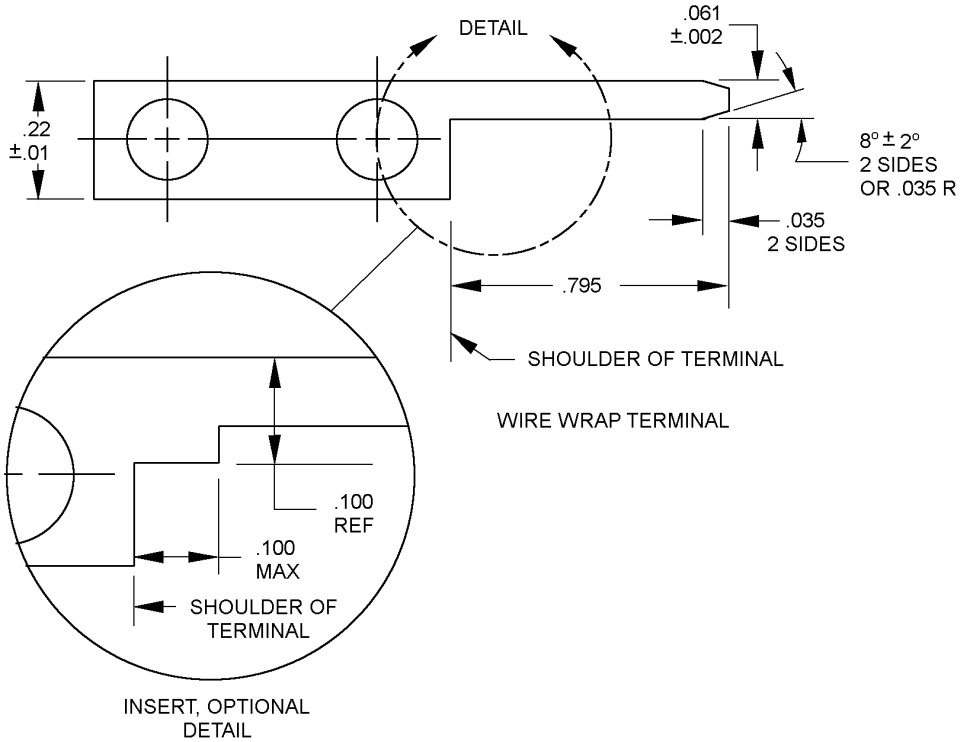

Inches	mm	Inches	mm
.002	0.05	.100	2.54
.010	0.25	.220	5.60
.035	0.89	.795	20.19
.061	1.55		

1. Dimensions are in inches.
2. Metric equivalents are given for information only.
3. All dimensions are after plating.
4. Solder lug terminals (not shown) shall meet the requirements of MIL-DTL-641, 3.5.5, and the “A” dimensions of figure 1 shall be .325 inch (8.26mm) maximum.

FIGURE 3. Terminals.

REQUIREMENTS:

Dimensions and configuration: See figure 1.

Terminals. See figure 3 (wirewrap) or MIL-DTL-641 (solder lug).

Materials. Springs: Nickel silver.
Contact: Palladium or gold alloy.

Insertion and withdraw forces shall be as follows.

Insertion force - 7 pounds (maximum).

Withdraw force - 1 pound (minimum).
- 7 pounds (maximum).

Test plug - TP777 (see figure 2).

Spring life test is applicable. Test plug TP777, shall be used.

Frame strength test is applicable. Load – 7 pounds maximum.

Terminal of tip contact spring shall be on the right side when terminals are viewed from the rear, with the jack in a position such that the contact spring pileup is on top of the jack frame.

Cutout in the jack frame shall be positioned so that a minimum of .016 inch (.4mm) clearance exists between the tip of the TP-777 plug and the edge of the frame cutout at all times during insertion of the plug.

All terminals shall be stacked as shown on schematic. (see figure 1)

Mating plugs. See table II.

The Part or Identifying Number (PIN) consists of the letter M, the basic specification number, the specification sheet number, and a number for jack type. (see table I)

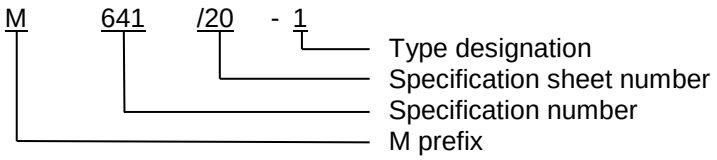

TABLE I. PIN.

Part number	Connection	Mounting	Switching action	Terminal
1	Tip, ring and sleeve	Double lug	4 breaks connected and monitor	Wirewrap
2			4 breaks connected and monitor	Solder lug
3			6 breaks	Wirewrap
4			6 breaks	Solder lug
5			4 breaks and monitor	Wirewrap
6			4 breaks and monitor	Solder lug

TABLE II. Mating plugs.

Dash number	Mating plug
-1	M642/13-1, -2, -3, -4
-2	
-3	
-4	
-5	
-6	

Marginal notations are not used in this revision to identify changes with respect to the previous issue due to the extent of the changes.

Referenced documents. This document references MIL-DTL-641.

CONCLUDING MATERIAL

Custodians:
Army – CR
Navy – EC
Air Force – 85
DLA - CC

Review activities:
Army – AR, AT, CR4, MI
Navy – AS, MC, OS, SH
Air Force – 11, 19, 99

Preparing activity:
DLA - CC

(Project 5935-2013-043)

NOTE: The activities listed above were interested in this document as of the date of this document. Since organizations and responsibilities can change, you should verify the currency of the information above using the ASSIST Online database at https://assist.dla.mil .