INCH-POUND

MIL-DTL-641G
27 February 2015
SUPERSEDING
MIL-DTL-641F
09 September 2013

DETAIL SPECIFICATION

JACKS, TELEPHONE GENERAL SPECIFICATION FOR

This specification is approved for use by all Departments and Agencies of the Department of Defense.

1. SCOPE

1.1 Scope. This specification covers jacks used in telephone (including telephone switchboard consoles), telegraph, and teletype circuits, and for connecting headsets, handsets, and microphones into communications circuits.

1.2 Classification. Jacks will be of the types specified (see 3.1).

2. APPLICABLE DOCUMENTS

2.1 General. The documents listed in this section are specified in sections 3 and 4 of this specification. This section does not include documents cited in other sections of this specification or recommended for additional information or as examples. While every effort has been made to ensure the completeness of this list, document users are cautioned that they must meet all specified requirements of documents cited in sections 3 and 4 of this specification, whether or not they are listed.

2.2 Government documents.

2.2.1 Specifications, standards, and handbooks. The following specifications, standards, and handbooks form a part of this document to the extent specified herein. Unless otherwise specified, the issues of these documents are those cited in the solicitation or contract (see 6.2).

DEPARTMENT OF DEFENSE SPECIFICATIONS

MIL-W-76 - Wire and Cable, Hookup, Electrical, Insulated, General Specification for.
MIL-I-24768/10 - Insulation, Plastic, Laminated, Thermosetting, Paper-base, Phenolic-resin (PBE).
MIL-DTL-55330 - Connectors, Electrical and Fiber Optic, Packaging of.

(See supplement 1 for list of specification sheets.)

Comments, suggestions, or questions on this document should be addressed to DLA Land and Maritime, Columbus, ATTN: VAI, P.O. Box 3990 East Broad Street, Columbus, Ohio 43216-5000 or email to RFConnector@dla.mil. Since contact information can change, you may want to verify the currency of this address information using the ASSIST Online database at https://assist.dla.mil.

AMSC N/A FSC 5935

DEPARTMENT OF DEFENSE STANDARDS

MIL-STD-202 - Test Method Standard, Electronic and Electrical Component Parts.
MIL-STD-1285 - Marking of Electrical and Electronic Parts.
MIL-STD-1353 - Electrical Connectors, Plug-in Sockets and Associated Hardware, Selection and Use of.
MIL-STD-1916 - DoD Preferred Methods for Acceptance of Product.

(Copies of these documents are available online at http://quicksearch.dla.mil/)

2.3 Non-Government publications. The following documents form a part of this document to the extent specified herein. Unless otherwise specified, the issues of these documents are those cited in the solicitation or contract (see 6.2).

ASME INTERNATIONAL

ASME B107.100 - Flat Wrenches.

(Copies of these documents are available online at http://www.asme.org.)

ASTM INTERNATIONAL

ASTM D787 - Standard Specification for Ethyl Cellulose Molding and Extrusion Compounds
ASTM D4066 - Standard Classification System for Nylon Injection and Extrusion Materials (PA)
ASTM D4673 - Standard Classification System for Acrylonitrile–Butadiene–Styrene (ABS) Plastics and Alloys Molding and Extrusion Materials

(Copies of these documents are available online at http://www.astm.org.)

ELECTRONIC COMPONENTS INDUSTRY ASSOCIATION (ECIA)

EIA-364-28 - Vibration Test Procedure for Electrical Connectors and Sockets

(Copies of these documents are available online at http://eciaonline.org.)

2.4 Order of precedence. Unless otherwise noted herein or in the contract, in the event of a conflict between the text of this document and the references cited herein (except for related specification sheets), the text of this document takes precedence. Nothing in this document, however, supersedes applicable laws and regulations unless a specific exemption has been obtained.

3. REQUIREMENTS

3.1 Specification sheets. The individual item requirements shall be as specified herein and in accordance with the applicable specification sheet. In the event of conflict between requirements of this specification and the specification sheet, the latter shall govern.

3.2 Classification of requirements. The requirements for the jacks are classified herein as follows:

Requirement	Paragraph
First article - - - - - - - - - -	3.3
Materials- - - - - - - - - - - - -	3.4
Design and construction- -	3.5
Performance- - - - - - - - - -	3.6

3.3 First article. When specified (see 6.4), samples shall be subjected to first article inspection in accordance with 4.4.

3.4 Materials. The materials shall be as specified herein. However, when a definite material is not specified, a material shall be used which enable the jacks to meet the performance requirements of this specification. Acceptance or approval of any constituent material shall not be construed as a guaranty of the acceptance of the finished product.

3.4.1 Fungus-inert. Materials used in the construction of these jacks shall be fungus-inert.

3.4.2 Shells. Unless otherwise specified (see 3.1), shells shall be plastic in accordance with ASTM D4066, molded rods or molded tubes, type PBE, of MIL-I-24768/10; type II of ASTM D787; a substituted polyarylether material, such as a polysulfone; or acrylonitrile-butadiene-styrene (ABS) in accordance with ASTM D4673.

3.4.3 Metal parts. All metal parts shall be of corrosion-resistant material or shall be plated to resist corrosion, to permit compliance with the salt spray requirements of 3.6.11.

3.4.4 Springs. Contact springs shall be nickel-silver or copper alloy. Copper alloy springs shall be suitably plated to prevent corrosion of the basis metal.

3.4.5 Contact spring lifters. Hard rubber shall not be used for contact spring lifters.

3.4.6 Recycled, recovered, environmentally preferable, or biobased materials. Recycled, recovered, environmentally preferable, or biobased materials should be used to the maximum extent possible, provided that the material meets or exceeds the operational and maintenance requirements, and promotes economically advantageous life cycle costs.

3.5 Design and construction.

3.5.1 Jacks. Jacks shall be of the design and construction specified (see 3.1).

3.5.2 Cable clamp (see 3.1). A cable clamp for anchoring the electrical cable to the frame of the jack shall be supplied with the jack. If the cable clamp is not made as an integral part of the jack, the clamp shall be loosely assembled to or packaged with the jack. Twine serving is not acceptable for this service.

3.5.3 Conductor strain relief (see 3.1). Provisions for anchoring the stay cord to provide strain relief for the conductors of the electrical cable shall be included in the jack, all edges of the anchor in contact with the stay cord shall be rounded off.

3.5.4 Screw threads. Screw threads on removable or replaceable threaded parts shall be in accordance with ASME B107.100.

3.5.5 Solder-lug terminals. Solder-lug terminals shall have circular or oval holes which will accommodate, after coating, two size 20 AWG, 7-strand wires for connections to electrical circuits. Stacked terminals shall be staggered. The exposed parts of the terminals shall be hot-tin-dipped or hot-solder-dipped, to facilitate soldering. Care shall be taken that the terminal-lug holes are not closed by the solder. Where solder-dipping is employed, only noncorrosive fluxes shall be used.

3.6 Performance.

3.6.1 Contact resistance. When jacks are tested as specified in 4.6.2, the contact resistance shall not exceed 0.02 ohm, except following the shock, vibration, and spring life test, the contact resistance shall not exceed 0.02 ohms, and following the salt spray test, the contact resistance shall not exceed 0.10 ohm.

3.6.2 Insulation resistance. When jacks are tested as specified in 4.6.3, the insulation resistance shall be 10,000 megohms or greater, and 1,000 megohms or greater after the moisture resistance test (see 4.6.7) or the salt spray test (see 4.6.12), unless otherwise specified (see 3.1).

3.6.3 Dielectric withstanding voltage. When tested as specified in 4.6.4, jacks shall withstand a minimum of 500 volts root mean square (rms) without dielectric breakdown or flashover.

3.6.4 Insertion and withdrawal forces. When jacks are tested as specified in 4.6.5, the insertion and withdrawal forces shall be as specified (see 3.1).

3.6.5 Thermal shock. When jacks are tested as specified in 4.6.6, the insulation shall not be cracked, warped, or delaminated; all marking shall remain legible; and it shall be possible to remove and replace screw-on shells (where used) without the use of tools other than a screwdriver inserted in the slot in the end of the metal portion of the jack.

3.6.6 Moisture resistance. When jacks are tested as specified in 4.6.7, the initial insulation resistance shall be as specified in 3.6.2. Following step 6 of the final cycle, at a relative humidity of 90 to 98 percent, the insulation resistance shall be not less than 1 megohm. Following the drying period, the insulation resistance, contact resistance, and dielectric withstanding voltage shall be as specified in 3.6.2, 3.6.1, and 3.6.3, respectively; the insulation shall not be cracked, warped, or delaminated; there shall be no excessive corrosion (see 3.6.11) of metal parts; all marking shall remain legible; and it shall be possible to remove and replace screw-on shells (where used) without the use of tools other than a screwdriver inserted in the slot in the end of the metal portion of the jack.

3.6.7 Vibration. When jacks are tested as specified in 4.6.8, there shall be no damage or loosening of parts, loss of electrical continuity for more than a period of 10 microseconds with a current of 100 milliamperes dc, the mating plug shall not separate from the jack, and the contact resistance shall be as specified in 3.6.1.

3.6.8 Shock (specified pulse). When jacks are tested as specified in 4.6.9, there shall be no visual evidence of mechanical damage, rupture of dielectric materials, loss of electrical continuity for more than a period of ten microseconds with a current of 100 milliamperes dc, or loosening of parts.

3.6.9 Spring life. When jacks are tested as specified in 4.6.10, there shall be no danger or loosening of parts, and the insertion and withdrawal forces, dielectric withstanding voltage, and contact resistance shall be as specified in 3.6.4, 3.6.3, and 3.6.1, respectively.

3.6.10 Water seal (see 3.1). When jacks are tested as specified in 4.6.11, there shall be no water leakage.

3.6.11 Salt spray (corrosion). When jacks are tested as specified in 4.6.12, there shall be no excessive corrosion of metal parts; the insulation shall not be cracked, warped, or delaminated; and the contact resistance shall be as specified in 3.6.1. Excessive corrosion shall be construed as any corrosion which interferes with electrical or mechanical performance, or, in the case of plated metals, when the corrosive action has passed through the plating and attacked the basis metal. Exposed screw threads may be protected with a suitable coating.

3.6.12 Frame strength (see 3.1). When jacks are tested as specified in 4.6.13, there shall be no rupture of joints.

3.6.13 Strain relief (see 3.1). When tested in accordance with 4.6.14, there shall be no evidence of damage or cutting of the conductors or stay cord.

3.6.14 Contact spring pressure (see 3.1).

3.6.14.1 Mated jacks. When tested in accordance with 4.6.15.1, the force required to lift each contact spring sufficiently to break electrical contact with the mating lug shall be 16 ounces minimum.

3.6.14.2 Unmated jacks. When tested in accordance with 4.6.15.2, the force required to lift each contact

spring of the jack by an amount between 0.005 inch and 0.015 inch shall be 12 ounces minimum.

3.6.15 Contact spring evertravel (see 3.1). When tested as specified in 4.6.16, the contact springs shall flex a minimum of 0.020 inch and a maximum of 0.030 inch, except the number one contact spring may flex a maximum of 0.045 inch.

3.6.16 Static load (see 3.1). When jacks are tested as specified in 4.6.17, there shall be no damage or loosening of parts.

3.6.17 Longitudinal pull (see 3.1). When tested in accordance with 4.6.18, there shall be no damage or loosening of parts, loss of electrical continuity for more than a period of ten microseconds with a current of 100 ± 2 milliamperes dc, the mating plug shall not separate from the jack, and the contact resistance shall be as specified in 3.6.1.

3.7 Marking. Jacks shall be marked in accordance with method I of MIL-STD-1285, and shall include the manufacturer's name, trademark, or source code and the part number (see 3.1).

3.8 Workmanship. Jacks shall be processed in such a manner as to be uniform in quality and shall be free from defects that will affect life, serviceability, and appearance. There shall be no evidence of loose contacts; poor or improper molding or fabrication; damaged or improperly assembled contacts; peeling, flaking, or chipping of
plating or finish; mechanical damage due to testing environment; nicks or burrs of metal parts or surfaces; improper or incorrect marking; or improper tinning of solder cups, terminals, pins, or contacts.

4. VERIFICATION

4.1 Test equipment and inspection facilities. Test and measuring equipment and inspection facilities of sufficient accuracy, quality and quantity to permit performance of the required inspection shall be established and maintained by the contractor.

4.2 Classification of inspections. The inspections specified herein are classified as follows:

a. First article inspection (see 4.4).
b. Conformance inspection (see 4.5).

4.3 Inspection conditions. Unless otherwise specified herein, all inspections shall be performed in accordance with the test conditions specified in the "GENERAL REQUIREMENTS" of MIL-STD-202.

4.3.1 Mating plugs. Mating plugs used for inspections of jacks shall have passed first article inspection.

4.4 First article inspection. First article inspection shall be performed at a laboratory acceptable to the Government (see 6.4) on sample units produced with equipment and procedures normally used in production.

4.4.1 Sample size. Twelve jacks of each type shall be subjected to first article inspection.

4.4.2 Inspection routine. The sample shall be subjected to the inspections specified in table I, in the order shown. All sample units shall be subjected to the inspections of groups I and II. The sample shall then be divided equally into two groups of six units each and subjected to the inspection for their particular group.

4.4.3 Failures. One or more failures shall be cause for refusal to grant first article approval.

4.4.4 Extension of approval. Jacks of the same type shall be approved for any permissible color other than that tested during first article inspection, provided that the material and design and construction used are identical.

4.4.6 First article inspection routine. First article inspection shall be as specified (see 3.1).

TABLE I. First article inspection requirements.

Inspection	Requirement paragraph	Test paragraph
Group I (all sample units)		
Visual and mechanical examination 1/ - - - - - - -	3.1, 3.4, 3.5, 3.7, 3.8	4.6.1
Group II (all sample units)		
Contact resistance -	3.6.1	4.6.2
Insulation resistance- - - - - - - - - - - - - - - - - - -	3.6.2	4.6.3
Dielectric withstanding voltage- - - - - - - - - - -	3.6.3	4.6.4
Insertion and withdrawal forces- - - - - - - - - - -	3.6.4	4.6.5
Strain relief -	3.6.13	4.6.14
Static load- -	3.6.16	4.6.17
Longitudinal pull- -	3.6.17	4.6.18
Group III (6 sample units)		
Thermal shock -	3.6.5	4.6.6
Moisture resistance- - - - - - - - - - - - - - - - - - - -	3.6.6	4.6.7
Vibration, high frequency- - - - - - - - - - - - - - - -	3.6.7	4.6.8
Shock (specified pulse)- - - - - - - - - - - - - - - - -	3.6.8	4.6.9
Insulation resistance - - - - - - - - - - - - - - - - - - -	3.6.2	4.6.3
Dielectric withstanding voltage- - - - - - - - - - -	3.6.3	4.6.4
Group IV (6 sample units)		
Contact resistance -	3.6.1	4.6.2
Spring life -	3.6.9	4.6.10
Contact spring pressure - - - - - - - - - - - - - - - -	3.6.14	4.6.15
Contact spring overtravel - - - - - - - - - - - - - - -	3.6.15	4.6.16
Water seal (when specified)- - - - - - - - - - - - -	3.6.10	4.6.11
Dielectric withstanding voltage- - - - - - - - - - -	3.6.3	4.6.4
Salt spray (corrosion) - - - - - - - - - - - - - - - - - - -	3.6.11	4.6.12
Frame strength (when specified) - - - - - - - - - - -	3.6.12	4.6.13

1/ Marking will be considered defective only if it is illegible at the completion of any of the required tests.

4.5 Conformance inspection.

4.5.1 Inspection of product for delivery. Inspection of product for delivery shall consist of visual and mechanical examination (see 4.6.1).

4.5.1.1 Inspection lot. An inspection lot shall consist of all jacks of the same basic type produced under essentially the same conditions, and offered for inspection at one time. An inspection lot may include jacks of the same basic type having shells of different colors, provided that the jacks are otherwise mechanically and dimensionally identical.

4.5.1.2 Sampling plan. The acceptable quality levels (AQL) shall be 1.0 and 2.5 (percent defective) for major or minor defects, respectively. Major and minor defects shall be as defined in MIL-STD-1916.

4.5.2 Rejected lots. If an inspection lot is rejected, the contractor may rework it to correct the defects, or screen out the defective units, and resubmit for reinspection. Resubmitted lots shall be inspected using tightened inspection and shall not thereafter be tendered for acceptance unless the former rejection or requirement of correction is disclosed. Such lots shall be separate from new lots, and shall be clearly identified as reinspected lots.

4.5.3 Inspection of packaging. Sample packages and packs and the inspection of the preservation packing and marking for shipment and storage shall be in accordance with the requirements of MIL-DTL-55330.

4.6 Methods of inspection.

4.6.1 Visual and mechanical inspection (see 3.1, 3.4, 3.5, 3.7, and 3.8). Jacks shall be inspected to verify that the materials, screw threads, physical dimensions, marking, and workmanship are in accordance with the applicable requirements. Physical dimensions of tip and ring shall be measured while a mating plug is inserted in the jack.

4.6.2 Contact resistance (see 3.6.1). Jacks shall be tested in accordance with method 307 of MIL-STD-202. The following details shall apply:

a. Method of connection – Applicable mating plug (see table IV). b. Test current – 100 ± 2 milliamperes direct current.
c. Maximum open-circuit test voltage – Approximately 6 volts.
d. Number of activations prior to measurement – Six, using applicable mating plug (see table IV) or a dimensionally equivalent brass plug.
e. Number of test activations – One.
f. Number of measurements per activation – Measure between each jack terminal and the corresponding plug terminal, at the point of normal connection, between all sets of local contacts which make upon insertion of the plug, and between all sets of local contacts which are normally closed.

TABLE IV. Jacks and mating plugs.

Jacks		Plugs	
Part number	Type designation	Part number	Type designation
M641/1-1 M641/1-2 M641/2-1 M641/2-2 M641/2-3 M641/2-4 M641/2-5 M641/2-6 M641/2-7 M641/2-8 M641/2-9 M641/6-1 M641/12-1 M641/13-1 M641/13-2 M641/13-3 M641/13-4 M641/15-1 M641/15-2 M651/15-3 M641/16-1 M641/16-2 M641/16-3 M641/18-1	JJ-015 JJ-019 JJ-016 JJ-017 JJ-024 JJ-035 JJ-072 JJ-084 JJ-085 JJ-086 JJ-087 JJ-034 JJ-089 JJ-092 JJ-093 JJ-096 JJ-097 JJ-098 JJ-099 JJ-102 JJ-104 JJ-105 JJ-107 JJ-134	M642/1-1 M642/1-2 M642/4-1 M642/4-2 M642/4-3 M642/11-1	PJ-047B PJ-047R PJ-055B PJ-055R PJ-055M PJ-636
M641/3-1 M641/3-2 M641/3-3 M641/3-4 M641/3-5 M641/3-6 M641/3-7 M641/9-1 M641/9-2 M641/9-3 M641/9-4 M641/14-1 M641/14-2 M641/14-3	JJ-022 JJ-042 JJ-073 JJ-074 JJ-075 JJ-077 JJ-078 JJ-079 JJ-081 JJ-082 JJ-106 JJ-095 JJ-101 JJ-103	M642/2-1 M642/2-2	PJ-051B PJ-051R
M641/4-1 M641/4-2	JJ-026 JJ-026	M642/3-1 M642/3-2 M642/10-1 M642/10-2	1/ PJ-054B 1/ PJ-054R PJ-540B PJ-540R
M641/5-1 M641/10-1 M641/17-1	JJ-033 JJ-063 JJ-133	M642/5-1 M642/8-1	PJ-068 PJ-309
M641/7-1 M641/7-2 M641/8-1 M641/8-2	JJ-048 JJ-048 JJ-055 JJ-055	M642/6-1 M642/7-1	PJ-291 PJ-292
M641/2-8 M641/11-1	2/ JJ-086 JJ-088	 M642/9-1	 PJ-327

TABLE IV. Jacks and mating plugs. – Continued.

Jacks		Plugs	
Part number	Type designation	Part number	Type designation
M641/19-9 M641/20-1 thru M641/20-8 thru M641/21-12	JJ-805 N/A N/A	 M642/13-1 thru M642/13-4	 PJ-711 PJ-778
M641/22-1	U-385/U	U-385/U	U-384/U

1/ Types PJ-054B and PJ-054R can be replaced by types PJ-540B and PJ-540R, respectively. The cord-entrance dimension for PJ-054B and PJ-054R is 0.250 inch, for PJ-540B and PJ-540R, the cord-entrance dimension is 0.281 inch.
2/ Two JJ-086 are needed for use with PJ-327

4.6.3 Insulation resistance (see 3.6.2). Jacks shall be tested in accordance with method 302 of MIL-STD-202. The following details shall apply:

a. Special preparation – Use applicable test plug (see 3.1).
b. Points of measurement – Between mutually insulated terminals of the jack before insertion of the plug, and between normally closed local contacts after insertion of the plug.
c. Test condition letter – A.

4.6.4 Dielectric withstanding voltage (see 3.6.3). Jacks shall be tested in accordance with method 301 of MIL- STD-202. The following details shall apply:

a. Magnitude of test voltage and nature of potential – 500 volts ac.
b. Duration of application – For first artical inspection, the test voltage shall be applied at a rate of 100 volts per second. For conformance inspection, the voltage may be applied instantaneously and shall be maintained for at least 5 seconds.
c. Points of application – Between mutually insulated terminals of the jack.

4.6.5 Insertion and withdrawal forces (see 3.6.4). The specified test plug (see 3.1) conforming to the applicable figure (see figures 1 to 6, inclusive) shall be used. The maximum force required to insert and withdraw the plug shall be measured as follows: The axis of the plug shall be aligned with the axis of the jack bushing. A straight thrust shall then be applied gradually in a direction along the axis of the plug until it is completely inserted into the jack; a straight pull shall then be applied gradually in a direction along the axis of the plug until it is completely separated from the jack.

4.6.6 Thermal shock (see 3.6.5). Jacks shall be tested in accordance with method 107 of MIL-STD-202. The following details and exception shall apply:

a. Special mounting – The applicable mating plug (see table IV) shall be inserted into the jack and shall remain inserted in the jack throughout the test.
b. Test condition letter – A.
c. Examination after cycling – Jacks shall be examined for cracking, warping, and delamination of the insulation, and legibility of marking. Screw-on shells (where used) shall be removed and replaced without the use of tools other than a screwdriver inserted in the slot in the end of the metal portion of the jack.

4.6.7 Moisture resistance (see 3.6.6). Jacks shall be tested in accordance with method 106 of MIL-STD-202. The following details and exceptions shall apply:

a. Mounting – Cord-mounting jacks shall be supported by wires connected in the normal manner to their terminals; the wires shall conform to type MW of MIL-W-76 and shall be polyvinylchloride insulated. All other jacks shall be mounted by normal mounting means, using brass hardware, on a vertical silver-plated brass or stainless-steel panel, the panel shall be insulated from the test chamber by ceramic insulators, or equal.
b. Initial measurements – The insulation resistance shall be measured as specified in 4.6.3.
c. Subcycle – Cord-mounting jacks shall not be subjected to steps 7a and 7b; they shall remain in the humidity chamber until the next cycle begins.
d. Polarization voltage – Polarization voltage shall be applied between at least one pair of mutually insulated terminals of 50 percent of the jacks. No potential shall be applied to the remaining 50 percent of the jacks.
e. Final measurements:
   1. At high humidity – Insulation resistance shall be measured as specified in 4.6.3.
   2. After drying period – The jacks shall be conditioned at a relative humidity of 50 ± 5 percent for 24 hours, after which the insulation resistance, contact resistance and dielectric withstanding voltage shall be measured as specified in 4.6.3, 4.6.2, and 4.6.4, respectively.

4.6.8 Vibration, high frequency (see 3.6.7). Jacks shall be tested in accordance with EIA-364-28. The following details and exceptions shall apply:

a. Method of mounting: Jacks shall be mounted with their longitudinal axis in a horizontal plane. b. Test condition: I.
c. Direction of motion: Along the axis of the jack, and then perpendicular to the axis of the jack.
d. Measurements during vibration: Each jack shall be monitored for electrical continuity, using a test current of 100 ±2 milliamperes, dc. Loss of continuity for a period longer than 10 microseconds constitutes a failure.
e. Measurements after vibration: Contact resistance shall be measured as specified in 4.6.2.
f. The vibration test shall be performed on jacks, both unmated (without the mating plug) and mated (with the mating plug).
g. Mating plug: The applicable mating plug (see table IV) shall have a 3-foot ±3 inch length of cord, of the type normally used with the plug, attached and hanging free. The mating plug shall be inserted into the jack and shall remain inserted in the jack throughout the mated portion of the test.

4.6.9 Shock (specified pulse) (see 3.6.8). Jacks shall be tested in accordance with method 213 of MIL-STD-202. The following details shall apply:

a. Mounting – Jacks shall be mounted on a vertical test plate. b. Test condition letter – M.

The test shall then be repeated with the jacks mounted on a horizontal plate.

4.6.10 Spring life (see 3.6.9). The specified test plug (see 3.1) conforming to the applicable figure (see figures 1 to 7 inclusive) shall be used. The plug should be lubricated, but the lubricant shall be removed from the plug and jack at the completion of the last cycle of insertion and withdrawal. The jacks shall be subjected to 5,000 cycles of complete insertion and withdrawal of the plug. The jacks shall then be examined for damage and loosening of parts, after which the insertion and withdrawal forces, dielectric withstanding voltage, and contact resistance shall be tested as specified in 4.6.5, 4.6.4, and 4.6.2, respectively. The jacks shall then be subjected to an additional 5,000 cycles of complete insertion and withdrawal of the plug and then shall be examined for damage and loosening of parts, after which the contact resistance shall be tested as specified in 4.6.2. For first article inspection, the rate of cycling shall not exceed 600 cycles per hour. For conformance inspection, the rate of cycling may be 1,200 cycles per hour.

4.6.11 Water seal (see 3.6.10). The jacks shall be mounted by normal mounting means at a depth of 6 feet in a tank, with the body of the jacks outside the tank and the bushing end of the jacks within the tank. The jacks shall then be subjected to a 6-foot minimum head of water (in the tank) for a period of 24 hours.

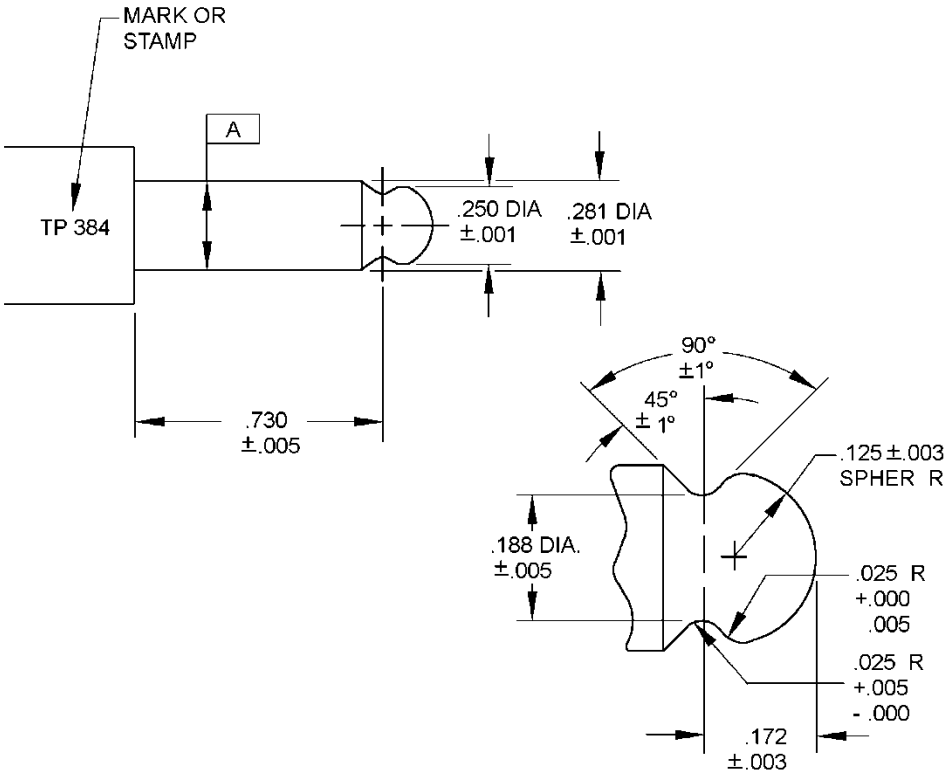

Inches	mm	Inches	Mm	Inches	mm
.0003	.008	.033	.84	.375	9.52
.002	.05	.143	3.63	.675	17.14
.003	.08	.170	4.32	.875	22.22
.005	.13	.210	5.33	.900	22.86
.010	.25	.250	6.35	1.144	29.06

FIGURE 1. Test plug TP51.

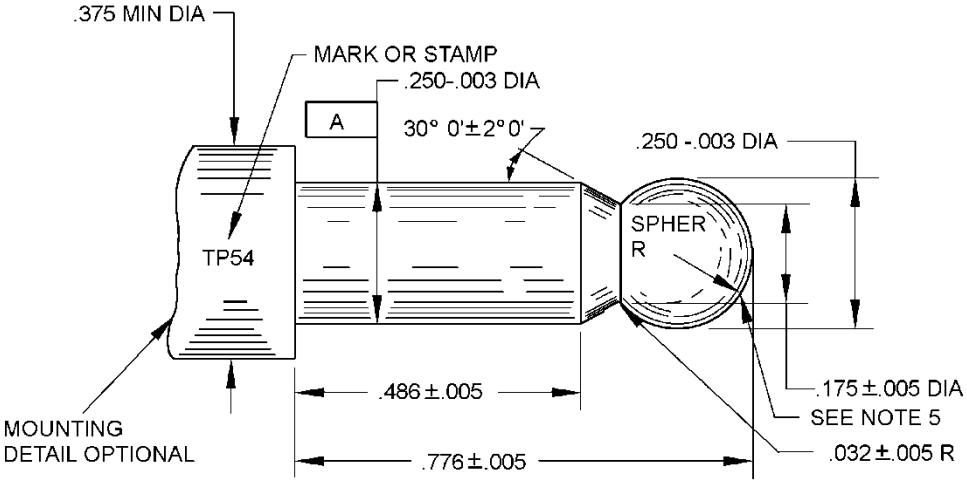

Inches	Mm	Inches	mm
.0003	.008	.175	4.44
.002	.05	.250	6.36
.003	.08	.375	9.52
.005	.13	.484	12.34
.032	.81	.776	19.71

NOTES:
1. Dimensions are in inches.
2. Metric equivalents are given for information only.
3. Finger shall be hardened to Rockwell C 60-62, polished, and then hard-chromium plated to .0003 (.008 mm) maximum thickness.
4. All dimensions before plating.
5. Concentricity shall be .002 (.05 m) total indicator reading on finger diameter A.

FIGURE 2. Test plug TP54.

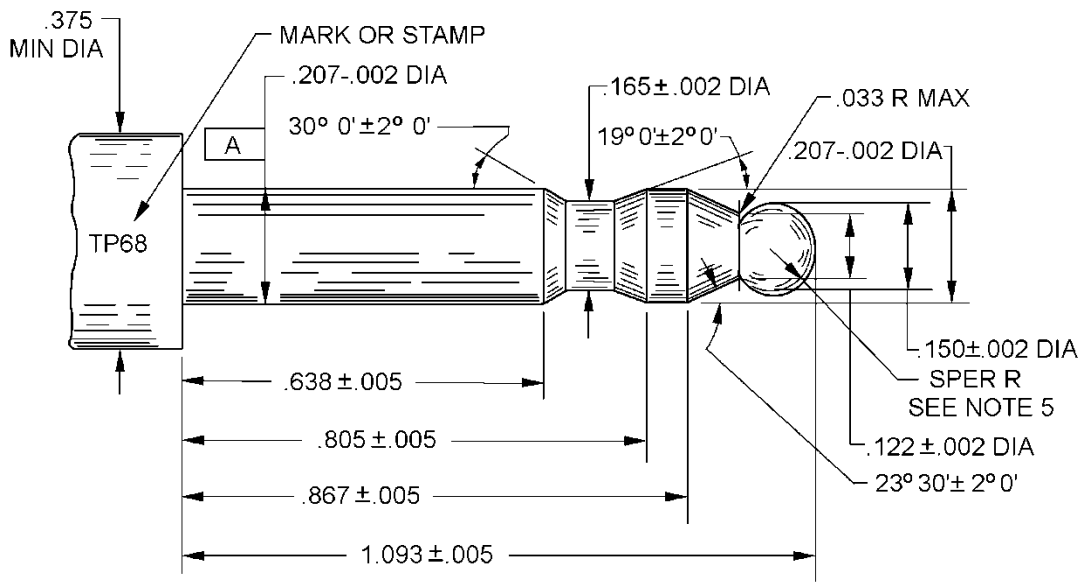

Inches	mm	Inches	mm	Inches	mm
.0003	.008	.010	.25	.375	9.52
.002	.05	.032	.81	.922	23.42
.003	.08	.175	4.44	1.218	30.94
.005	.13	.250	6.35		

NOTES:
1. Dimensions are in inches.
2. Metric equivalents are given for information only.
3. Finger shall be hardened to Rockwell C 60-62, polished, and then hard-chromium plated to .0003 (.008 mm) maximum thickness.
4. All dimensions before plating.
5. Concentricity shall be .002 (.05 mm) total indicator reading on finger diameter A.

FIGURE 3. Test plug TP55.

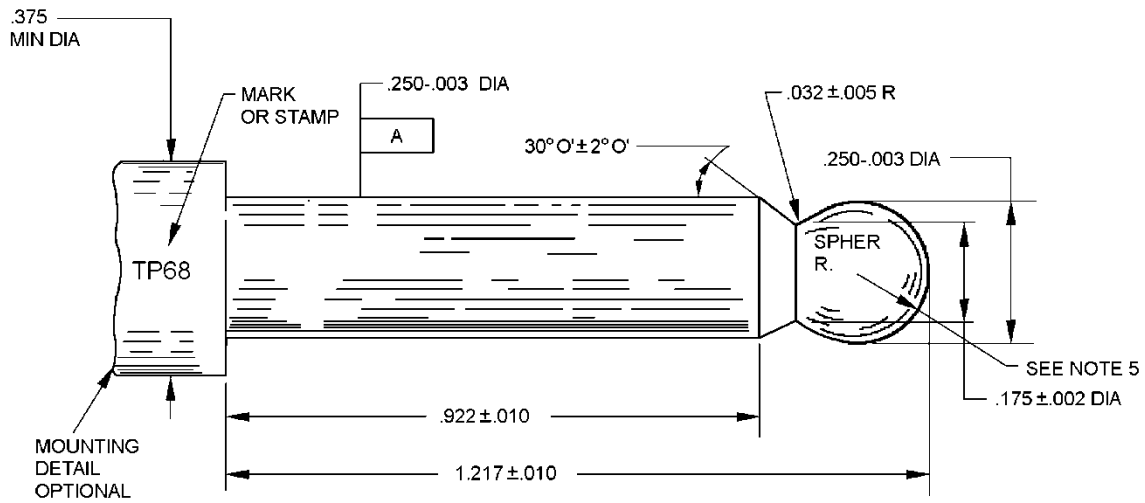

Inches	mm	Inches	mm	Inches	mm
.0003	.008	.150	3.81	.805	20.45
.002	.05	.165	4.19	.867	22.02
.005	.13	.207	5.25	1.093	27.76
.033	.34	.375	9.52		
.122	3.10	.638	16.21		

NOTES:
1. Dimensions are in inches.
2. Metric equivalents are given for information only.
3. Finger shall be hardened to Rockwell C 60-62, polished, and then hard-chromium plated to .0003 (.008 mm) maximum thickness.
4. All dimensions before plating.
5. Concentricity shall be .002 (.05 mm) total indicator reading on finger diameter A.

FIGURE 4. Test plug TP68.

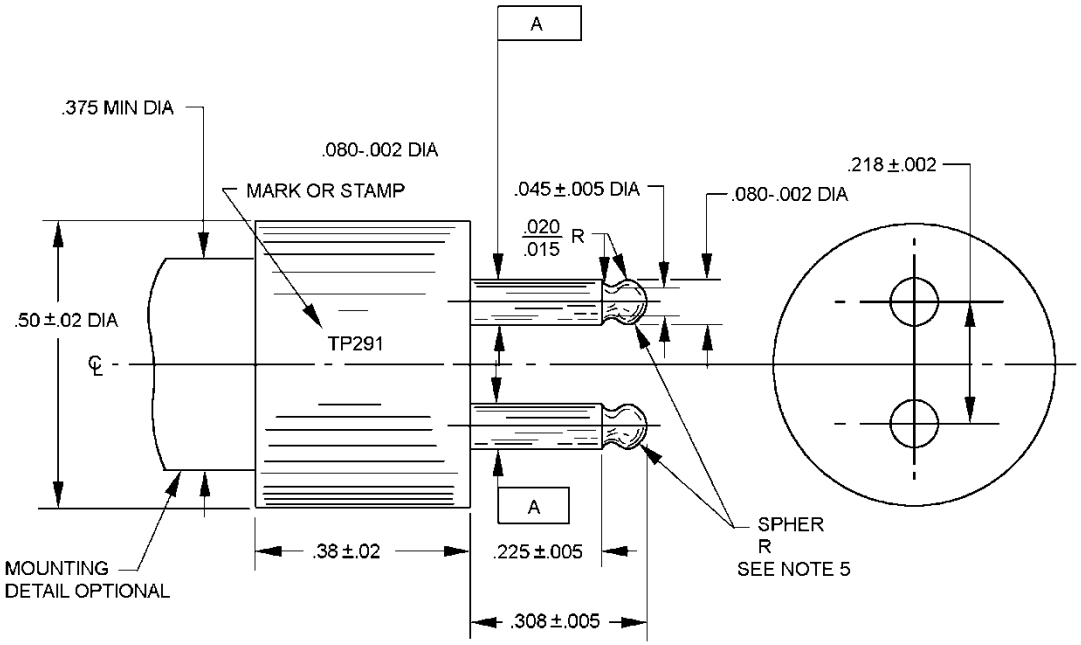

Inches	mm	Inches	mm	Inches	mm
.0003	.008	.045	1.14	.375	9.52
.002	.05	.080	2.03	.38	9.7
.005	.13	.218	5.54	.50	12.7
.015	.38	.225	5.72		
.020	.51	.308	7.82		

NOTES:
1. Dimensions are in inches.
2. Metric equivalents are given for information only.
3. Finger shall be hardened to Rockwell C 60-62, polished, and then hard-chromium plated to .0003 (.008 mm) maximum thickness.
4. All dimensions before plating.
5. Concentricity shall be .002 (.05 mm) total indicator reading on finger diameter A.

FIGURE 5. Test plug TP291.

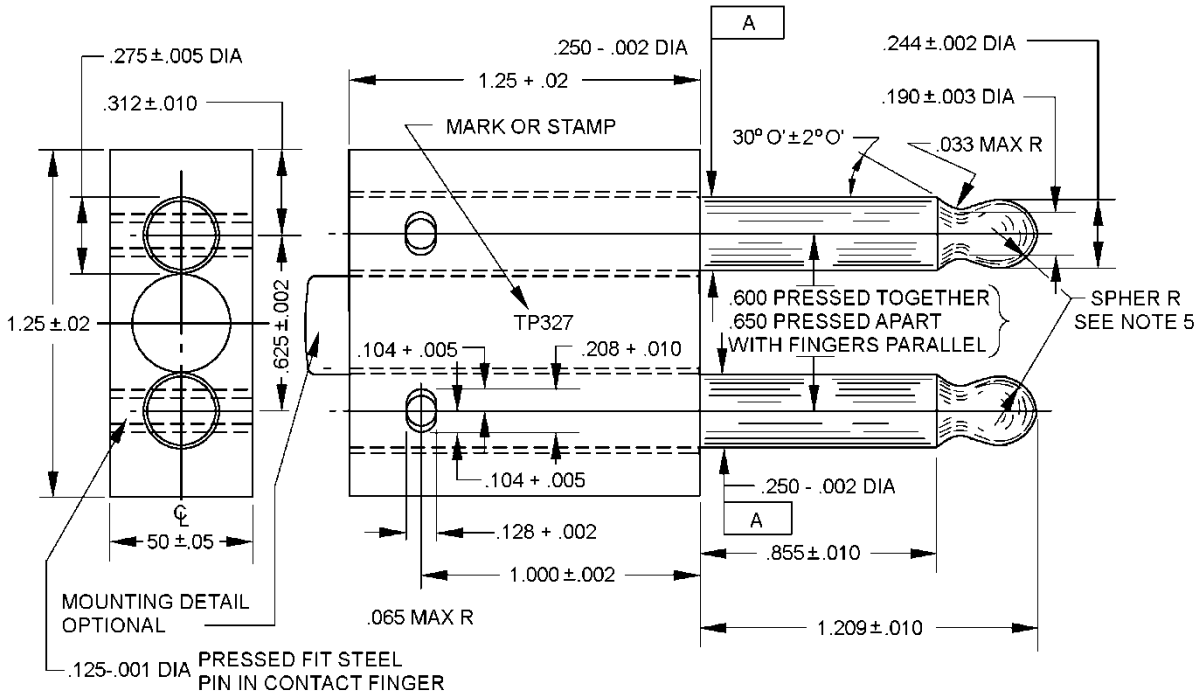

Inches	mm	Inches	mm	Inches	mm	Inches	mm	Inches	mm
.0003	.008	.02	.5	.190	4.83	.50	12.7	1.209	30.71
.001	.03	.033	.84	.208	5.28	.600	15.24	1.25	31.8
.002	.05	.065	1.65	.244	6.20	.625	15.88		
.003	.08	.104	2.64	.250	6.35	.650	16.51		
.005	.13	.125	3.18	.275	6.98	.855	21.72		
.010	.28	.128	3.25	.312	7.92	1.000	25.40		

NOTES:
1. Dimensions are in inches.
2. Metric equivalents are given for information only.
3. Finger shall be hardened to Rockwell C 60-62, polished, and then hard-chromium plated to .0003 (.008 mm) maximum thickness.
4. All dimensions before plating.
5. Concentricity shall be .002 (.05 mm) total indicator reading on finger diameter A.

FIGURE 6. Test plug TP327.

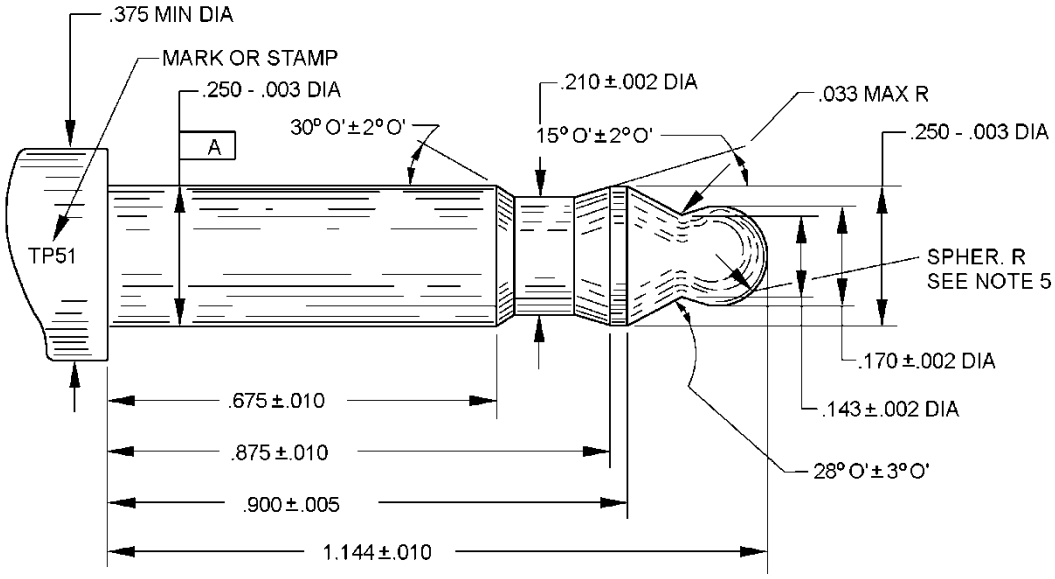

Inches	Mm	Inches	mm
.0003	.008	.172	4.37
.001	.03	.188	4.78
.003	.08	.250	6.35
.005	.13	.281	7.14
.025	.64	.730	18.54
.125	3.18		

NOTES:
1. Dimensions are in inches.
2. Metric equivalents are given for information only.
3. Finger shall be hardened to Rockwell C 60-62, polished, and then hard-chromium plated to .0003 (.008 mm) maximum thickness.
4. All dimensions before plating.
5. Concentricity shall be .002 (.05 mm) total indicator reading on finger diameter A.

FIGURE 7. Test plug TP384.

4.6.12 Salt spray (corrosion) (see 3.6.11). Jacks shall be tested in accordance with method 101 of MIL-STD- 202. The following details shall apply:

a. Test condition letter – B.
b. Measurements after exposure – After 1-hour drying period at room temperature, contact resistance shall be measured as specified in 4.6.2.
c. Unless otherwise specified, 5 percent salt solution.

4.6.13 Frame strength (see 3.6.12) unless otherwise specified (see 3.1). Jacks shall be mounted on a suitable panel, with the long axis of the jack horizontal, and the heads of the pileup clamping screws facing upward. A 30- pound minimum load, freely suspended between the pileup clamping screws, shall be applied for 5 minutes.

4.6.14 Strain relief (see 3.6.13). While terminated to the specified cable, a force of 50 pounds minimum shall be applied in a longitudinal direction for a minimum of five minutes.

4.6.15 Contact spring pressure (see 3.6.14).

4.6.15.1 Mated jacks (see 3.6.14.1). The specified test plug (see 3.1) conforming to the applicable figure (see figures 1 to 7, inclusive) shall be used. Each jack shall be monitored for electrical continuity, using a test current of 100 ± 2 milliamperes, dc. A force of 16 ± (0, 1) ounces shall be applied in a direction perpendicular to the jack axis. Continuation of continuity for a period longer than ten microseconds constitutes a failure.

4.6.15.2 Unmated jacks (see 3.6.14.2). While in the unmated state, each contact spring shall be subjected to a force of 12 ± (0, 1) ounces applied in a direction perpendicular to the jack axis away from the jack body.

4.6.16 Contact spring overtravel (see 3.6.15). The specified test plug (see 3.1) conforming to the applicable figure (see figures 1 to 7, inclusive) shall be used. During the insertion of the test plug, the flexing of the contact spring shall be measured.

4.6.17 Static load (see 3.6.16). A static load of 150 pounds minimum shall be applied to the jack at approximately midpoint for one minute minimum. The jack shall be resting in a horizontal position on a concrete floor or rigid metal surface. The load shall be applied perpendicular to the longitudinal axis of the jack through a rigid bar 0.50 ± 0.25 wide placed tangent to the shell surface and parallel to the floor or surface supporting the jack.

4.6.18 Longitudinal pull (see 3.6.17). The specified test plug (see 3.1) conforming to the applicable figure (see figures 1 to 7, inclusive) shall be used. The test plug, when inserted in the jack and subjected to a longitudinal
pull of one pound less than the measured withdrawal force shall not render the jack inoperative or cause an open contact (discontinuity) between the plug and jack.

5. PACKAGING

5.1 Packaging. For acquisition purposes, the packaging requirements shall be as specified in the contract or order (see 6.2). When packaging of materiel is to be performed by DoD or in-house contractor personnel, these personnel need to contact the responsible packaging activity to ascertain packaging requirements. Packaging requirements are maintained by the Inventory Control Point's packaging activities within the Military Service or Defense Agency, or within the Military Service's System Commands. Packaging data retrieval is available from the managing Military Department's or Defense Agency's automated packaging files, CD-ROM products, or by contacting the responsible packaging activity.

6. NOTES

(This section contains information of a general or explanatory nature which may be helpful, but is not mandatory.)

6.1 Intended use. The telephone jacks covered by this specification are primarily for use in ground support and shipboard communications equipment. Those connectors which form an integral part of a headset and do not encounter a high vibration environment may be used for aerospace applications.

6.2 Acquisition requirements. Acquisition documents should specify the following:

a. Title, number, and date of this specification.
b. Title, number, and date of the applicable specification sheet, and the complete PIN (see 3.1).
c. Packaging requirements (see 5.1).

6.3 Definitions. See MIL-STD-1353, "Electrical connectors and hardware."

6.4 First article. The contracting officer should include specific instructions in acquisition documents regarding arrangements for examinations, approval of first article test results, and disposition of first article samples. Invitations for bids should provide that the Government reserves the right to waive the requirement for samples for first article inspection to those bidders offering a product which has been previously acquired or tested by the Government, and that bidders offering such products, who wish to rely on such production or test, must furnish evidence with the bid that prior Government approval is presently appropriate for the pending contract.

6.5 Mating plugs. Information on mating plugs is shown in table IV. All jacks listed in the same block of column 1 are applicable for mating with all plugs listed in the corresponding block of column 2.

6.6 Finish colors. Coating will vary in color depending on basic metal alloy and method of manufacture. This variance in color does not alter the performance capabilities of the finish.

6.7 Environmentally preferable material. Environmentally preferable materials should be used to the maximum extent possible to meet the requirements of this specification. As of the dating of this document, the U.S. Environmental Protection Agency (EPA) is focusing efforts on reducing 31 priority chemicals. The list of chemicals and additional information is available on their website at http://www.epa.gov/osw/hazard/wastemin/priority.htm. Included in the list of 31 priority chemicals are cadmium, lead, and mercury. Use of these materials should be minimized or eliminated unless needed to meet the requirements specified herein (see Section 3).

6.8 Subject term (keyword) listing.

Cable
Jumper Plugs
Receptacles
Accessories

6.9 Changes from previous issue. The margins of this specification are marked with vertical lines to indicate where changes from the previous issue were made. This was done as a convenience only and the Government assumes no liability whatsoever for any inaccuracies in these notations. Bidders and contractors are cautioned to evaluate the requirements of this document based on the entire content irrespective of the marginal notations and relationship to the previous issue.

CONCLUDING MATERIAL

Custodians:
Army – CR
Navy – EC
Air Force – 85
DLA –- CC

Preparing activity:
DLA – CC

Review activities:
Army – AR, CR4, MI
Navy – AS, MC, OS, SH
Air Force – 19, 99

(Project 5935-2015-008)

NOTE: The activities listed above were interested in this document as of the date of this document. Since organization and responsibilities can change, you should verify the currency of the information above using the ASSIST Online database at https://assist.dla.mil.