INCH POUND

MIL-DTL-5794C
w/AMENDMENT 1
1 February 2012
SUPERSEDING
MIL-DTL-5794C
16 November 2006

DETAIL SPECIFICATION

MICROPHONE UNIT M-6A/UR AND MICROPHONE, CARBON M-51/UR (CARBON NOISE CANCELLING)

Inactive for new design after March 30, 1999.

This specification is approved for use by all
Departments and Agencies of the Department of Defense.

1. SCOPE

1.1 This specification covers two types of noise canceling; carbon microphone units designated Microphone Unit M-6A/UR and Carbon Microphone M-51/UR.

2. APPLICABLE DOCUMENTS

2.1 General. The documents listed in this section are specified in sections 3, 4, or 5 of this specification. This section does not include documents cited in other sections of this specification or recommended for additional information or as examples. While every effort has been made to ensure the completeness of this list, document users are cautioned that they must meet all specified requirements of documents cited in sections 3, 4, or 5 of this specification, whether or not they are listed.

2.2 Government documents.

2.2.1 Specifications, standards, and handbooks. The following specifications, standards, and handbooks form a part of this document to the extent specified herein. Unless otherwise specified, the issues of these documents are those cited in the solicitation or contract.

DEPARTMENT OF DEFENSE SPECIFICATION

DOD-P-15328 - Primer (Wash), Pretreatment (Formula No. 117 for Metals) (Metric)

Comments, suggestions, or questions on this document should be addressed to: DLA Land and Maritime, ATTN: VAI, P.O. Box 3990, Columbus, Ohio, 43218-3990 or emailed to sound@dscc.dla.mil. Since contact information can change, you may want to verify the currency of this address information using the ASSIST Online database at https://assist.daps.dla.mil.

DEPARTMENT OF DEFENSE STANDARDS

MIL-STD-130	-	Identification Marking of U.S. Military Property
MIL-STD-202	-	Electronic and Electrical Component Parts
MIL-STD-13231	-	Marking of Electronic Items
MIL-STD-31000	-	Technical Data Packages

(Copies of these documents are available online at https://assist.daps.dla.mil/quicksearch/ or from the Standardization Document Order Desk, 700 Robbins Avenue, Building 4D, Philadelphia, PA 19111-5094.)

2.2.2 Other Government documents, drawings, and publications. The following other Government documents, drawings, and publications form a part of this document to the extent specified herein. Unless otherwise specified, the issues of these documents are those cited in the solicitation or contract.

DRAWINGS

U.S. ARMY (CAGE 80063)

SC-D-10598	-	Microphone Test Equipment, ARL-174-A, Calibration & Test Set-Ups.

(Copies of this document required by contractors in connection with specific acquisition functions may be obtained from the procuring activity at DSCC.cddwgs@dla.mil, or as directed by the contracting officer.)

2.3 Non-Government publications. The following documents form a part of this document to the extent specified herein. Unless otherwise specified, the issues of these documents are those cited in the solicitation or contract.

AMERICAN NATIONAL STANDARDS INSTITUTE

ANSI S1.15	-	Measurement Microphones – Part 2: Primary Method for Pressure Calibration of Laboratory Standard Microphones by the Reciprocity Technique

(Copies of these documents are available from http://www.ansi.org or the American National Standards Institute (ANSI), 25 West 43rd Street, 4th floor, New York, NY 10036).

ASTM INTERNATIONAL

ASTM B633	-	Electrodeposited Coatings of Zinc on Iron and Steel

(Copies of these documents are available from http://www.astm.org or ASTM International, P.O. Box C700, 100 Barr Harbor Drive, West Conshohocken, PA 19428-2959.)

IPC - ASSOCIATION CONNECTING ELECTRONICS INDUSTRIES

J-STD-004	-	Requirements for Soldering Fluxes
J-STD-005	-	Requirements for Soldering Pastes-Replaces QQ-S-571: 1994; Amendment 1 - June 1996
J-STD-006	-	Requirements for Electronic Grade Solder Alloys and Fluxed and Non-Fluxed Solid Solders for Electronic Soldering Applications-Incorporates Amendment 1: October 2008; Amendment 2: October 2009.

(Copies of these documents are available from http://www.ipc.org or IPC - Association Connecting Electronics Industries, 3000 Lakeside Drive, Suite 309 S, Bannockburn, IL 60015-1249.)

2.4 Order of precedence. Unless otherwise noted herein or in the contract, in the event of a conflict between the text of this document and the references cited herein, the text of this document takes precedence. Nothing in this document, however, supersedes applicable laws and regulations unless a specific exemption has been obtained.

3. REQUIREMENTS

3.1 General. Unless otherwise stated herein, the term “microphone unit” is taken to mean either Microphone Unit M-6A/UR or Carbon Microphone M-51/UR.

3.2 First article. When specified (see 6.2), a sample shall be subjected to first article inspection, in accordance with 4.3.

3.2.1 Fabrication and assembly. First article samples shall be fabricated by the contractor and shall meet all requirements specified for the equipment on contract. The first article samples shall be assembled using parts, materials, and processes that will be employed in production, and shall be fabricated and assembled in a manner similar to that to be used in production.

3.2.2 Approval and use. Approval of first article samples shall not be construed as a waiver of any specified requirement. After being released to the contractor (see 3.2.3), first article samples, which are to be offered as units on a contract, shall be refabricated by the contractor, if necessary to meet specified requirements.

3.2.3 Reference standards. After first article samples have been approved, they shall be kept intact in custody of the Government inspector until released by him. They shall be used as reference standards to resolve any differences of opinion regarding interpretation of requirements.

3.3 Parts, materials, and processes; general. Parts, materials, and processes shall be such as to enable the microphone unit to meet its performance and other requirements as specified herein. Ratings and derated values of parts and materials shall not be exceeded, when the microphone unit is subjected to specified service conditions (see 3.6).

3.3.1 Molded plastic material. All molded plastic parts shall be of the high temperature, high impact, and resistant plastic material, which shall meet the service requirements of the specification.

3.3.2 Steel parts. Steel parts shall be zinc-plated in accordance with ASTM B633, with thickness class Fe/Zn 25 and finish type II.

3.3.3 Exposed non-ferrous parts. Parts that are exposed after the microphone unit is assembled shall be thoroughly cleaned, followed by a preventive coating in accordance with DOD-P-15328. This shall be followed by two coats of a high quality alkyd, semi-gloss, black enamel.

3.3.4 Cementing compound. Any cementing compound used in the construction of the microphone unit, shall be of such a character and quality that it will withstand all service and test conditions specified herein, without evidence of loosening or otherwise affecting the performance requirements of the microphone unit.

3.3.5 Soldering flux. Only rosin or rosin-core solder may be used as a flux in the assembly of the microphone unit.

3.3.5.1 Soft solder. Soft solder shall not be depended upon, for the mechanical strength of any soldered joint. There shall be no evidence of “cold soldering” and the use of excessive amounts of solder will not be acceptable. Soft solder shall be solid or rosin flux-cored in accordance with composition Sn97Pb3 of J-STD-004, J-STD-005, and J-STD-006.

3.3.5.2 Pure tin. The use of pure tin, as an underplate or final finish, is prohibited both internally and externally. Tin content of loudspeaker components and solder shall not exceed 97 percent, by mass. Tin shall be alloyed with a minimum of 3 percent lead, by mass (see 6.3)

3.3.6 Recycled, recovered, or environmentally preferable materials. Recycled, recovered, or environmentally preferable materials should be used to the maximum extent possible, provided that the material meets or exceeds the operational and maintenance requirements, and promotes economically advantageous life cycle costs.

3.4 Detail requirements.

3.4.1 Design. The microphone units shall be of the noise-canceling carbon microphone type. In general, the design and assembly of the microphone units shall be such that they will be inherently stable in mechanical, electrical, and acoustical characteristics. It shall not be necessary to condition a microphone unit by any special procedure before it is ready for use. Each microphone unit shall consist of a plastic housing and a separate integral assembly containing the active operating elements. The electro-acoustical performance of this element shall not be adversely affected by stresses or deformation of the plastic housing. This element, when completely assembled, shall be mechanically rigid and sealed to prevent entrance of moisture into the carbon chamber of the unit.

3.4.2 Microphone cover. Microphone Unit M-6A/UR shall be equipped with a cover for protection against breath and air blasts and icing. The cover shall be a thin rugged membrane held in place over the front and rear grids of the microphone unit. The design shall be such as to permit easy removal and replacement of the cover. The frequency response and noise-canceling characteristics of the microphone unit shall remain essentially unchanged with the cover in place on the microphone unit, or removed.

3.4.3 Contour and dimensions. The shape and dimensions of Microphone Unit M-6A/UR shall be as specified on figure 1. The shape and dimensions of Microphone Carbon M-51/UR shall be as specified on figure 2.

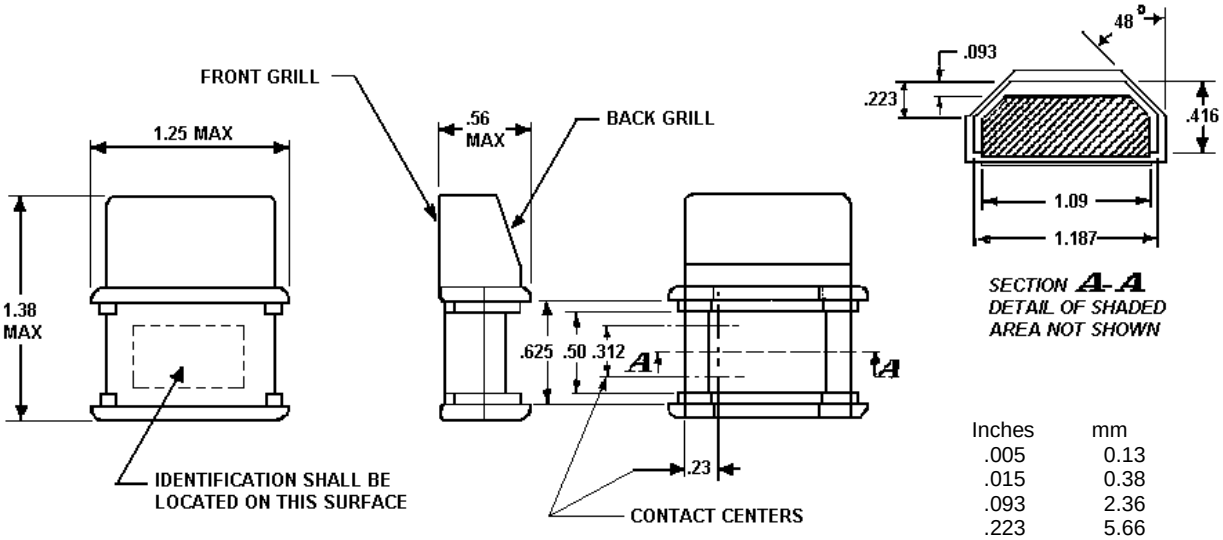

Inches	mm
.005	0.13
.015	0.38
.093	2.36
.223	5.66
.234	5.94
.312	7.92
.416	10.57
.500	12.70
.593	15.06
.625	15.88
1.094	27.79
1.187	30.15
1.250	31.75
1.375	34.93

NOTES:

1. Dimensions are in inches. Tolerances are ± .015 inch for two place (.XX), ± .005 inch for three place (.XXX) dimensions, and ± 2 degrees for angles.
2. Metric equivalents are given for information only.
3. Characters and markings shall be for identification in accordance with MIL-STD-130 and meet the test requirements of MIL-STD-13231.

FIGURE 1. Microphone unit M-6A/UR.

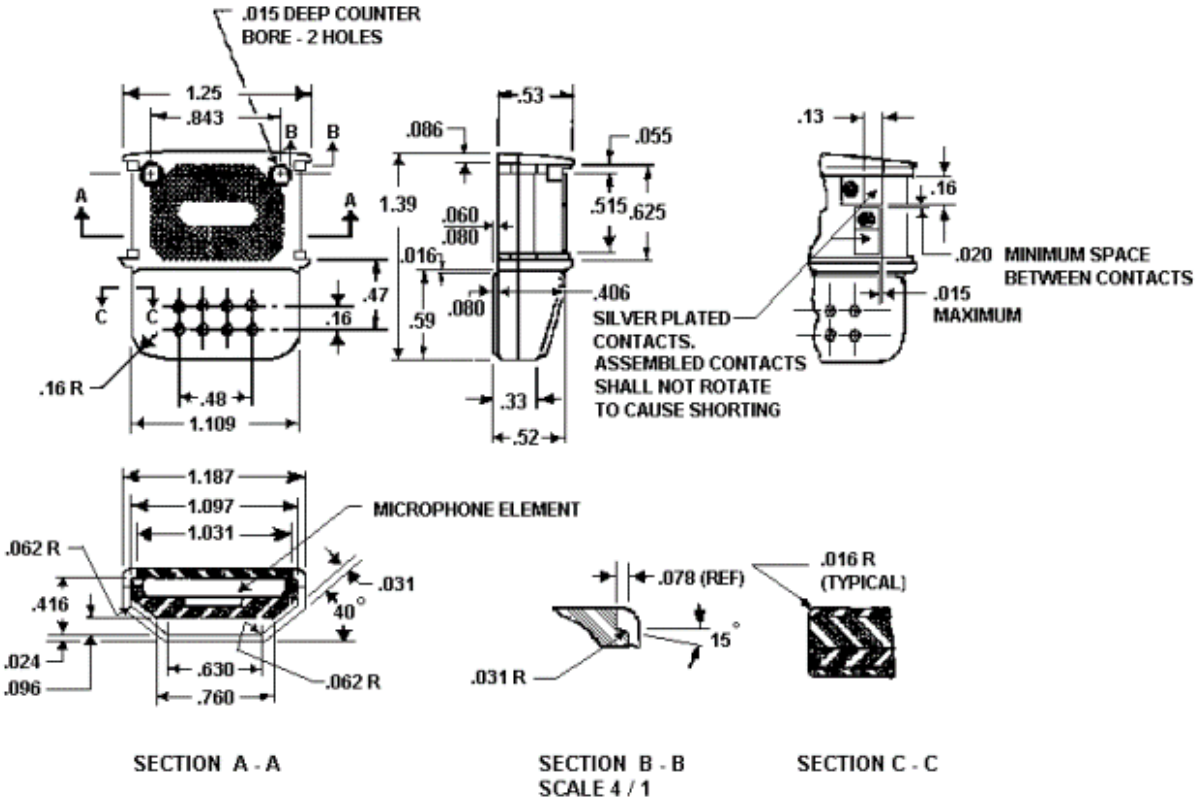

Inches	mm	Inches	mm	Inches	mm	Inches	mm
.005	0.13	.062	1.57	.406	10.31	.625	15.88
.015	0.38	.078	1.98	.416	10.57	.630	16.00
.016	0.41	.080	2.03	.47	11.94	.760	19.30
.020	0.51	.086	2.18	.48	12.19	.843	21.41
.024	0.61	.096	2.44	.515	13.08	1.031	26.19
.031	0.79	.13	3.30	.52	13.21	1.097	27.86
.055	1.40	.16	4.06	.53	13.46	1.109	28.17
.060	1.52	.33	8.38	.59	14.99	1.187	30.15
						1.25	31.75

NOTES:

1. Dimensions are in inches. Tolerances are ± .015 inch for two place (.XX), ± .005 inch for three place (.XXX) dimensions, and ± 1 degree for angles.
2. Metric equivalents are given for information only.
3. Characters and markings shall be for identification in accordance with MIL-STD-130 and meet the test requirements of MIL-STD-13231.

FIGURE 2. Microphone, carbon M-51/UR outline dimensions.

3.4.4 Weight. The weight of a microphone unit shall not exceed one ounce.

3.4.5 Carbon and carbon cavity.

3.4.5.1 Carbon granules. The carbon granules shall be of a grade, quality, size, and shape equivalent to Western Electric type 13A122 and shall be suitable in every respect, for the particular application.

3.4.5.2 Carbon granule leaks. The carbon granules shall be retained positively in the microphone unit in such a manner that it is impossible for them to leak from the carbon cavity during normal service use or under any of the conditions specified herein.

3.4.5.3 Carbon cavity. All contact surfaces within the carbon cavity shall be suitably plated with gold, and shall be free from porosity, and shall be thoroughly cleaned before assembly of the microphone.

3.5 Performance.

3.5.1 Response characteristics. The response of the microphone unit measured as specified herein shall be expressed in decibels (dB) relative to a zero reference level of 1.0 millivolt. The sound pressure applied to the face of the microphone unit shall be 115 dB and relative to 20 m+icro-Pascal (µPa). The response shall be such as to meet the following requirements, when measured with the grid of the microphone unit in a vertical plane.

3.5.1.1 Response limits – Microphone M-6A/UR. The frequency response shall be not less than 45 dB, nor more than 53 dB, at any frequency between 300 and 4,000 Hz, inclusive. The arithmetical average of the test frequency response values over the 300 to 4,000 Hz frequency range shall be between the limits of 47.0 and 51.0 dB, inclusive. The difference between any two successive readings, 200 cycles apart, shall not exceed 2.5 dB. Below 300 and above 4,000 Hz, the response shall fall off at a rate of not less than 3 dB per octave.

3.5.1.2 Response limits – Microphone, Carbon M-51/UR. The response shall be not less than 45 dB above a zero reference level of 1 millivolt across 100 ohms at 1,000 Hz and shall meet the frequency requirements listed in table I and table II, when the microphone unit is in the vertical position.

3.5.1.2.1 Smoothness of frequency response curve. The response, within each frequency band shown in table II, shall not vary by more than the specified rate of change in dB, when measured across any band width of the specified size.

TABLE I. Frequency response.

Frequency in Hz	Allowable variation in response from 1,000 Hz values in dB	
300	-5	+1
400	-4	+1
500	-3	+1
600	-2	+1
800	-1	+1
1,000	0	0
1,250	-1	+1
1,500	-1	+1
1,750	-2	+1
2,000	-3	+1
2,250	-4	+1
2,500	-5	+1
2,750	-6	+1
3,000	-6	+1
3,250	-6	+1
3,500	-6	+1
3,750	-7	+1
4,000	-8	+1

TABLE II. Smoothness of frequency response.

Frequency band Hz	Band width Hz	Rate of change dB	
300 – 1,000	400	+3	-1
1,000 – 2,000	500	+1	-3
2,000 – 3,000	1,000	+1	-4
3,000 – 4,000	1,000	+3	-5

3.5.2 Positional characteristics.

3.5.2.1 Microphone unit M-6A/UR. The frequency response shall be not less than 4 dB at any frequency between 300 and 4,000 Hz, when a sound pressure of 115 dB relative to 20 µPa is established at the face of the microphone unit with the microphone unit mounted in positions of ± 90 degrees with reference to the vertical. In each position, the response at any frequency within the range of 300 to 3,000 Hz shall be within ± 5 dB of the response at 1,000 Hz. The difference between any two successive readings, taken at 200 Hz apart, shall not exceed 3 dB. From 3,000 to 4,000 Hz the change shall be no more than ± 8 dB from the response at 1,000 Hz.

3.5.2.2 Microphone, carbon M-51/UR. The response of the microphone, when mounted at an angle of + 90 degrees (face up) or – 90 degrees (face down), shall not be more than 5 dB below the response of the microphone in the vertical position, at any of the test frequencies. The shape of the curve shall be similar to the shape of the curve obtained in the vertical position.

3.5.3 Microphone unit resistance (see 4.6.3). The direct current (dc) resistance of the microphone unit shall be between 40 and 100 ohms.

3.5.4 Noise cancellation (see 4.6.4). The signal-to-noise ratio of the microphone unit shall be at least 13 dB in favor of the signal, for noises of the types encountered in aircraft, boats, tanks, and other vehicles.

3.5.5 Burning noise (see 4.6.5). The output of the microphone unit, due to burning noise, shall be kept to the lowest practicable minimum and in no case shall it exceed 1.0 millivolt.

3.5.6 Vibration aging characteristics (see 4.6.13). The design and construction of and the materials used in the microphone unit shall be such that the microphone unit shall maintain its original performance characteristics, in use or in storage. The microphone unit shall comply with the following requirements, when artificially aged as a result of the vibration tests.

3.5.6.1 Change in resistance due to aging. The resistance of the microphone unit shall not increase by more than 75 percent of its original resistance, as a result of the prescribed vibration tests.

3.5.6.2 Change in response due to aging. The average response of the microphone unit over the 300 to 4,000 Hz frequency range shall not change by more than 3 dB, as a result of the vibration tests.

3.5.7 Anti-packing (see 4.6.16).

3.5.7.1 Surges. The microphone unit shall retain its response characteristics within 4 dB, after 10 interruptions of the current, in the test circuit on figure 3. The following test conditions apply:

a. 50 millihenry inductance.
b. make-break switch added in series with the microphone unit.
c. microphone current adjusted for 50 milliamperes.

3.5.7.2 Overload current. The microphone unit shall be capable of retaining its response characteristics within 3 dB immediately after being subjected to a dc excitation of 80 milliamperes for 1 (one) hour in a constant current circuit.

3.5.7.3 Extended operation. The microphone unit shall be capable of retaining its response characteristics within 4 dB, immediately after being subjected to an excitation current of 50 milliamperes for 8 (eight) hours in a constant current circuit.

3.5.8 Immersion – (Microphone, Carbon M-51/UR). The response of the microphone shall not decrease by more than 3 dB from its initial response, at any frequency between 300 and 4,000 Hz after immersion (see 4.6.12).

3.5.9 Gun blast – (Microphone, Carbon M-51/UR). The microphone shall transmit intelligible speech after subjection to the gun blast test (see 4.6.14). The degradation in response shall not exceed 4 dB at any frequency.

3.6 Service conditions (Environmental).

3.6.1 Altitude.

3.6.1.1 Microphone Unit M-6A/UR.

3.6.1.1.1 Response during pressure changes within operating range (see 4.6.8.2). The response of the microphone unit shall not vary by more than 3 dB from its initial response at any frequency between 300 and 4,000 Hz, when subjected to any pressure in the range of 30 to 16.7 inches of mercury (simulation of ground level to approximately an altitude of 15,000 feet) inclusive, with the pressure constant or varying.

3.6.1.1.2 Pressure extremes (see 4.6.8.1). The response of the microphone unit shall not vary by more than 4 dB from its initial response at any frequency between 300 and 4,000 Hz. The signal-to-noise ratio shall not be reduced by more than 2 dB as a result of subjection to pressures ranging from 30 to 3.4 inches of mercury (ground level to approximately an altitude of 50,000 feet).

3.6.1.1.3 Response during rapid pressure changes (see 4.6.8.2). The response of the microphone unit shall not vary by more than 5 dB from its initial response at any frequency in the range of 300 to 4,000 Hz, during rapid pressure changes corresponding to a rate of 5,000 feet per minute in the range of 30 to 16.7 inches of mercury (ground level to approximately 15,000 feet).

3.6.1.2 Carbon microphone M-51/UR (see 4.6.8.3). The response of the microphone unit at any frequency in the range of 300 to 4,000 Hz shall not decrease by more than 5 dB from the response at ground level, when operated at a pressure of 20.4 inches of mercury (corresponding to an altitude of 10,000 feet).

3.6.2 Salt atmosphere. The response of the microphone unit shall not vary by more than 4 dB from its initial response between 300 and 4,000 Hz, after having been subjected to the salt spray test specified in 4.6.11. There shall be no evidence of destructive corrosion.

3.6.3 Temperature cycling (see 4.6.9). The response of the microphone unit shall not vary by more than 3 dB from its initial response at any frequency between 300 and 4,000 Hz, after being subjected to the temperature cycling test specified herein. The resultant signal-to-noise ratio shall not be reduced by more than 2 dB.

3.6.4 Temperature extremes. The response of the microphone unit shall not vary by more than 4 dB from its initial response at any frequency between 300 and 4,000 Hz, after being subjected to the temperature extremes test specified in 4.6.10.

3.6.5 Moisture resistance. The response of the microphone unit shall not vary by more than 3 dB from its initial response at any frequency between 300 and 4,000 Hz, immediately after being subjected to the humidity cycling test specified in 4.6.7.

3.6.6 Impact (see 4.6.15). The microphone unit shall withstand the impact test specified herein, with no resultant structural failure or other defects. In order to meet this requirement, it will be necessary to fasten the grill to the microphone case by means other than cementing alone. The frequency response shall not show a change greater than 3 dB from its original response at any frequency between 300 and 4,000 Hz. The resultant signal-to-noise ratio shall not decrease by more than 2 dB.

3.6.7 Vibration. The microphone unit shall have no structural failure or defects and its frequency response shall be within 3 dB of its initial response at any frequency between 300 and 4,000 Hz, after being subjected to the vibration test of 4.6.13.

3.7 Marking. The microphone unit shall be marked for identification in accordance with MIL-STD-130 and tested in accordance with MIL-STD-13231. The identification shall include the type designation and the manufacturer's Part or Identifying Number (PIN) and shall be located as specified on figure 1 and figure 2.

3.8 Interchangeability. All parts having the same manufacturer's PIN shall be functionally and dimensionally interchangeable. The total data package requirements of MIL-STD-31000, in the elements for product drawings and associated lists, shall govern changes in the manufacturer's PIN.

3.9 Workmanship. Workmanship shall be such that the finished product shall meet all the requirements of this specification.

4. VERIFICATION

4.1 Classification of inspections. The inspection requirements specified herein are classified as follows:

a. First article inspection (microphone only) (see 4.3).
b. Conformance inspection (see 4.4).

4.2 Inspection conditions. Unless otherwise specified, all inspections shall be performed in accordance with the test conditions specified in 4.5.

4.3 First article inspection (microphone only). When required (see 6.2), first article inspection shall consist of all of the tests in table III and the inspections specified for groups A, B, and C (see table IV, table V, and table VI, respectively).

4.3.1 Sample size. Ten (10) microphones shall be submitted for first article inspection. The units selected shall be representative of "production configuration" in design, materials, construction and performance.

4.3.2 Inspection routine. The sample shall first be subjected to the inspections specified in table III, in the order shown. All sample units shall then be subjected to the inspections of group A in table IV. The sample shall then be divided equally into two groups of 5 (five) units each. One group shall be subjected to the group B inspections, and the other group shall be subjected to group C inspections, as specified in table IV.

4.3.3 Failures. If one or more sample units fail to pass any group inspections, the sample lot shall be considered to have failed.

4.3.4 Noncompliance. If a sample fails to pass first article inspection, the manufacturer shall notify the procuring activity and the responsible Government inspector of such failure and take corrective action on the materials or processes, or both, as warranted. The manufacturer shall also take corrective action on all units of product, which can be corrected, were manufactured under essentially the same materials and processes, and are considered subject to the same failure. Acceptance of the product shall be discontinued until corrective action, which is acceptable to the procuring activity, has been taken. After the corrective action has been taken, first article inspection shall be repeated on additional sample units (all inspections, or the inspection which the original sample failed, at the option of the procuring activity). Final first article approval shall be withheld until the first article inspection has shown that the corrective action was successful.

TABLE III. First article inspection.

Inspection	Requirement paragraph	Inspection paragraph
Moisture resistance	3.6.5	4.6.7
Altitude	3.6.1	4.6.8
Temperature extreme	3.6.4	4.6.10
Vibration	3.6.7	4.6.13
Salt atmosphere	3.6.2	4.6.11
Anti-Packing	3.5.7	4.6.16
Gun blast	3.5.9	4.6.14

4.4 Conformance inspection.

4.4.1 Inspection of product for delivery. Inspection of product for delivery shall consist of group A, group B, and group C inspections, as specified in table IV.

4.4.1.1 Inspection lot. An inspection lot shall consist of all products of the same type, produced under essentially the same conditions, and offered for inspection at one time.

4.4.2 Group A inspection. Group A inspection shall consist of 100 percent of each lot. If one or more defects are found, the defective microphone unit(s) shall be removed. All failures occurring during testing shall be documented and investigated to determine root cause. Acceptance of the product shall be discontinued until corrective action, which is acceptable to the procuring activity, has been taken. After the corrective action has been taken, the group A inspections shall be repeated (all inspections, or the inspection which originally failed, at the option of the procuring activity). Approval shall be withheld until the inspection has shown that the corrective action was successful. If one or more defects are found during the second inspection, the lot shall be rejected and shall not be supplied to this specification.

TABLE IV. Conformance inspection.

Inspection	Requirement paragraph	Inspection paragraph
Group A		
Visual and mechanical	3.8	4.6.1
Response measurements (spot check)	3.5.1	4.6.2.6
Microphone unit resistance	3.5.3	4.6.3
Group B		
Response measurements (Continuous check)	3.5.1	4.6.2.4
Signal to noise ratio	3.5.4	4.6.4
Burning noise	3.5.5	4.6.5
Group C		
Position characteristics	3.5.2	4.6.6
Temperature cycling	3.6.3	4.6.9
Immersion	3.5.8	4.6.12
Impact	3.6.6	4.6.15

4.4.3 Group B inspection. Group B inspections shall be as specified in table IV and shall be made on samples, which have been subjected to and have passed group A inspection.

4.4.3.1 Order of inspection within group B. Group B inspections shall be performed in any order, which is satisfactory to the Government inspector.

4.4.3.2 Sampling plan. A sample of parts shall be randomly selected, as specified in table V. If one or more defects are found, the lot shall be rescreened and defects removed. All failures occurring during testing shall be documented and investigated to determine root cause. Acceptance of the product shall be discontinued until corrective action, which is acceptable to the procuring activity, has been taken. After corrective action has been taken, a new sample of parts shall be randomly selected, as specified in table V, and the group B inspection repeated. If one or more defects are found in the second sample, the lot shall be rejected and shall not be supplied to this specification.

TABLE V. Group B sampling plan.

Lot size	Sample size Group B
2 to 25	2
26 to 50	3
51 to 90	4
91 to 150	5
151 to 280	6
281 to 500	7
501 to 1,200	8
1,201 to 3,200	9
Over 3,200	5 per thousand

4.4.4 Group C inspection. This inspection shall be as specified in table IV and shall normally be performed on sample units that have been subjected to and met group A and group B inspection.

4.4.4.1 Sampling for Group C inspection. Samples for group C inspection shall be selected as specified in table VI, and inspected as specified in table IV, from which no failures are permitted:

TABLE VI. Group C sampling plan.

Purchase quantity	Number to be tested
Up to 300	1
301 to 700	2
701 to 1500	3
1501 to 3000	5
Over 3000	5 per thousand

4.4.4.2 Noncompliance. If one or more sample units fail group C inspection, the contractor shall immediately investigate the cause of failure and shall report to the government inspector the results thereof and details of the corrective action on the process and all units of product, which were manufactured with the same conditions, materials, processes, etc. If the government inspector does not consider that the corrective action will enable the product to meet specified requirements or if the contractor cannot determine the cause of failure, the matter shall be referred to the contracting officer.

4.4.4.2.1 Disposition of samples. Samples, which have passed the group C inspection, may be delivered on the contract, if the lot is accepted and the samples are still within specified electrical tolerances.

4.5 Test conditions. Unless otherwise specified or indicated, the microphone unit shall be tested under the following conditions:

a. Temperature. Between 20 and 35 degrees Centigrade.
b. Pressure. Normal atmospheric.
c. Humidity. Between 25 and 90 percent relative.
d. Position. The face of the microphone shall be in a vertical plane.

4.6 Test procedures.

4.6.1 Visual and mechanical inspection. The microphone unit shall be given a thorough mechanical inspection for size, loose or defective parts, workmanship, visible defects, marking, weight and dimensions.

4.6.2 Response tests.

4.6.2.1 Sound pressure meter. The sound pressure meter specified on figure 4, or equal, shall be used in setting up sound levels for performing the response measurements specified herein. The microphone of this sound level meter shall be a Western Electric 640-A or 640-AA condenser microphone or a demonstrated equivalent. The sound pressure meter microphone shall be calibrated by the reciprocity method in accordance with ANSI S1.15 (Part 2) at a recognized laboratory.

4.6.2.2 Sound source calibration. The equipment and test setup shown on figure 5, or its specifically approved equivalent, shall be used to provide the sound input to the microphone under test for all response measurements. The test fixture (see Drawing SC-D-10598) employed to hold the microphone unit under test shall be so constructed as to permit rotation of the microphone unit when mounted in the fixture (for conditioning purposes), and shall support the microphone unit in such a fashion that the grid area of the microphone unit (with no surrounding baffle) is exposed to the sound source. The grid of the microphone unit under test shall be spaced 0.25 (¼) inch from the mouth of the sound source. The geometric centerline of the grid shall coincide with the centerline of the mouth of the sound source. The input to the drive unit required to produce a sound pressure of 115 dB above a reference level of 20 µPa, at the grid of the microphone unit under test, shall be determined for each 100 Hz increment from 200 to 1,000 Hz inclusive, each 200 Hz increment from 1,000 to 4,000 Hz inclusive, and each 500 Hz increment from 4,000 to 5,000 Hz inclusive. The grid of the 640-A condenser microphone shall be spaced 0.25 (¼) inch from the mouth of the sound source during calibration, and the centerline of the sound source mouth and the 640-A condenser microphone shall coincide. No baffle shall be used with the 640-A condenser microphone. At each frequency the distortion in the output of the sound source shall be such that the level of the second harmonic is at least 35 dB below the fundamental and the levels of the third and higher harmonics are each at least 40 dB below the fundamental.

4.6.2.3 Conditioning of microphone unit. Immediately prior to response measurements, each microphone unit shall be conditioned using the test circuit on figure 3, according to the following procedure.

4.6.2.3.1 Secure microphone in test fixture. The microphone unit shall be secured to the test fixture, and electrically connected to Jack J-1 of the test circuit. The microphone shall be shaken vigorously in all directions before mounting it in the test fixture.

4.6.2.3.2 Adjust for microphone current. Switch S-1 of the test circuit shall be closed (no microphone current) and resistor R-1 shall be adjusted to produce a reading of 60 milliamperes for M-6A/UR, and 85 milliamperes for M-51/UR, on meter M-1.

4.6.2.3.3 Rotate microphone. The microphone unit shall be rotated about its axis 3 times, through an arc of approximately 270 degrees and back in 2 seconds. The microphone unit shall be in the position at which it is to be tested at the completion of this rotation procedure.

4.6.2.3.4 Apply conditioning sweep tone. Switch S-1 shall be opened, approximately 3 seconds shall be allowed for current stabilization, then the conditioning sweep tone specified in 4.6.2.3.5 and 4.6.2.3.6 shall be applied. The voltage of the conditioning sweep tone shall have been previously determined as follows:

4.6.2.3.4.1 Set oscillator for maximum driver response. The oscillator shall be set at that frequency between 1,000 and 3,000 Hz, at which the response of the driver is maximized.

4.6.2.3.4.2 Set driver output sound pressure level. The driver input voltage shall be adjusted at that frequency, to 127 dB sound level (the maximum sound pressure level developed during conditioning shall, therefore, not exceed 127 dB).

4.6.2.3.4.3 Determine reference conditioning voltage. The oscillator frequency shall be changed to 1,000 Hz without disturbing the output control of the oscillator. The voltage read on output meter 2 on figure 5, shall then be taken as the 1,000 Hz reference conditioning voltage.

4.6.2.3.5 Adjust input voltage. The driver input voltage shall be adjusted at 1,000 Hz to the value required for conditioning (see 4.6.2.3.4.3).

4.6.2.3.6 Perform conditioning sweep cycles. The oscillator frequency shall be continuously varied from 1,000 to 3,000 and returned to 1,000 Hz audio frequency range 3 times at a rate of approximately one complete sweep in 2 seconds.

4.6.2.3.7 Adjust oscillator to zero. At the conclusion of the third sweep cycle, the oscillator output voltage shall be gradually reduced to zero.

4.6.2.3.8 Delay before response measurements. Approximately 2 seconds shall elapse, before starting response measurements in a specific test run.

Caution: The microphone unit shall not be disturbed by loud clicks from the driver unit, noises, vibrations, or accidental bumps during “conditioning” or measurements of response, resistance or thermal noise.

4.6.2.4 Response measurement. After the microphone unit under test has been conditioned in accordance with the above procedure, the sound level, determined as specified in 4.6.2.2 shall be applied. The response (output level) of the microphone unit shall be determined for each test frequency. Measurements shall start at 200 Hz and progress through each successively higher test frequency up to 4,000 Hz. The sound output from the driver shall be left on in changing the oscillator from one test frequency to the next, but the sound input to the microphone unit shall not exceed 115 dB in effecting the changes in frequency. This shall not be construed as prohibiting the use of push-button frequency control in production testing, provided that substantially equivalent results are obtained.

4.6.2.5 Response curves. The response curves of the microphone units, based on the contractor's test data, shall be plotted on 20 divisions per inch (total 120 divisions) by two 4.5-inch cycles, semi-logarithmic graph paper. The axis of ordinates shall cover the range of from + 10 to + 70 dB. Each vertical division shall be 0.5 dB. Resistance, thermal noise and signal-to-noise ratio values for the microphone units shall also be shown on the curve sheets. It is necessary that the total time for taking the response curve does not exceed 3 minutes in order that the carbon button may not completely lose its conditioning.

4.6.2.6 Response measurements (individual tests). Prior to making response measurements, the microphone unit shall be conditioned as specified herein or according to some other specifically approved method, which will produce equivalent results. Each microphone units shall be subjected to response tests at not less than 6 (six) approved frequencies, such as 400, 1,000, 2,000, 3,000, and 4,000 Hz. The specified frequencies to be used will be determined by the procuring activity on the basis of tests made on the first article samples and information gained in the initial stages of production. Sweep or band frequency tests may be employed provided the contractor demonstrates the suitability of such tests to the procuring activity. The method of testing and the selection of frequencies shall be such that they will truly indicate the overall response characteristics and output level of the microphone.

4.6.3 Microphone unit resistance (see 3.5.3). The microphone unit resistance shall be measured at the time the 1,000-Hz response is being determined, as specified in 4.6.2.4, by the voltmeter-ammeter method and meters M-1 and M-3 read simultaneously utilizing the circuit shown on figure 3.

4.6.4 Signal-to-noise ratio test (see 3.5.4).

4.6.4.1 Noise spectrum. By means of suitable apparatus similar to that detailed on figure 6, or equal, and the test circuit on figure 7, or equal, provision shall be made for the production of the noise spectrum shown in table VII at an rms sound pressure of 115 dB above a reference level of 20 µPa, as measured at the microphone diaphragm. The "noise" source shall be a loud speaker capable of producing a sound pressure of 115 dB above a reference level of 20 µPa at the rear as well as the front of the microphone and the loudspeaker shall be located as far away from the microphone as practicable. The calibrating microphone shall be mounted in the test rig, in the box, 0.25 (¼) inch from the mouth of the signal speaker, which shall be short-circuited during adjustments of the noise spectrum.

4.6.4.2 Signal spectrum. By means of the apparatus as set up previously, provision shall also be made for the production of the following signal spectrum shown in table VIII, at an rms sound pressure of 115 dB above a reference level of 20µPa. The "signal" source shall be the driver unit. The calibrating microphone shall be positioned 0.25 (¼) inch directly in front of the driver unit.

TABLE VII. Noise spectrum.

Frequency Hz	Sound pressure in dB relative to sound pressure at 130 Hz
40	0
70	0
130	0
300	-5
600	-9
1,000	-13
2,000	-17
3,000	-19
4,000	-21

TABLE VIII. Signal spectrum.

Frequency Hz	Sound pressure in dB relative to sound pressure at 130 Hz
130	0
300	+7
600	+8
1,000	+5
2,000	-3
3,000	-7
4,000	-9

4.6.4.3 Measurement of the signal-to-noise ratio.

4.6.4.3.1 Connection to test circuit. The microphone under test shall be mounted in its test rig with its front grid 0.25 (¼) inch from the mouth of the signal speaker. The microphone shall be connected to the test circuit.

4.6.4.3.2 Measurement of the signal-to-noise ratio. The short-circuit current shall be as specified in 4.6.2.3.2. The short-circuit switch shall be opened and the noise spectrum applied for 3 seconds. The noise spectrum shall be removed and the signal spectrum applied for 3 seconds and the output of the microphone shall be measured. The signal spectrum shall be removed and the noise spectrum applied for 3 seconds and the output of the microphone measured. The signal-to-noise ratio shall be the quotient of these values.

4.6.5 Burning noise (see 3.5.5). The output of the microphone unit due to burning noise shall be measured in the circuit shown on figure 3. After the microphone unit has been conditioned according to the procedure given, it shall remain still and without signal input for 30 seconds. The maximum output, as indicated on Meter M-2 of the test circuit during the 10-second interval immediately following the 30-second period, shall be the measure of the burning noise.

4.6.6 Positional characteristics. Response measurements shall be made with the microphone mounted at angles of + 90 degrees (face up) and – 90 degrees (face down). The angles shall be measured in vertical plane between the sound source-microphone axis and the horizontal.

4.6.7 Moisture resistance (see 3.6.5). The microphone shall be subjected to the humidity resistance test of method 106 of MIL-STD-202, except that step 7 shall not apply.

4.6.8 Altitude.

4.6.8.1 Pressure cycling (M-6A/UR only) (see 3.6.1.1.2). The microphone unit shall be subjected to 5 varying pressure cycles. Each pressure cycle shall consist of 30 minutes at 3.4 inches of mercury (approximately 50,000 feet) and 30 minutes at 30 inches of mercury (approximately sea level). The pressure transition shall be approximately 5,000 feet per minute. The response characteristic of the microphone unit shall then be measured.

4.6.8.2 Response at simulated altitude of 15,000 feet (M-6A/UR only) (see 3.6.1.1.1 and 3.6.1.1.3). The microphone unit shall be placed in an altitude chamber and the pressure inside the chamber reduced from 30 inches of mercury (approximately sea level) to that corresponding to an altitude of 15,000 feet (approximately 16.7 inches of mercury). The response of the microphone unit shall be measured at that simulated altitude. The response of the microphone unit shall also be measured at a frequency of 1,000 Hz while the pressure is being varied at a rate of 5,000 feet per minute (up or down).

4.6.8.3 Response at simulated altitude of 10,000 feet (M-51/UR only) (see 3.6.1.2). The microphone unit shall be placed in an altitude chamber. The response of the microphone unit at ground level shall be obtained at 300, 500, 1,000, 2,000, 3,000 and 4,000 Hz. Pressure inside the chamber shall then be reduced to 20.4 inches of mercury, corresponding to an altitude of 10,000 feet. The response of the microphone unit shall be taken again at the same frequencies as mentioned above.

4.6.9 Temperature cycling (see 3.6.3). The microphone shall be subjected to the thermal shock test of method 107, condition A of MIL-STD-202.

4.6.10 Temperature extremes (see 3.6.4).

4.6.10.1 Low temperature. The microphone unit shall be exposed to an ambient temperature of – 62 degrees C, for 2 hours. Remove the microphone from the cold chamber and immediately measure the response under normal room temperature conditions.

4.6.10.2 High temperature. The microphone unit shall be exposed to an ambient temperature of + 71 degrees C, for 2 hours. Remove the microphone unit from the hot chamber and immediately measure its response under normal room temperature conditions.

4.6.11 Salt atmosphere (see 3.6.2). The microphone unit shall be subjected to the salt spray test in accordance with method 101 of MIL-STD-202 for a period of 50 hours. The microphone unit shall be washed in tap water to remove excess salt deposits and then excess moisture removed. The response characteristics shall be measured immediately after removal from the salt spray chamber.

4.6.12 Immersion (M-51/UR only) (see 3.5.8). The microphone unit shall be immersed in tap water, at room temperature to a covering depth of 3 feet for a period of 2 hours. The response characteristics of the microphone unit shall be measured immediately after removal from the water.

4.6.13 Vibration (see 3.5.6 and 3.6.7). The microphone unit shall be placed in a vertical position on a vibration machine giving motion in 3 planes; vertical, horizontal and 45 degrees to the horizontal of 0.03 inch amplitude (0.06 inch total excursion), and the frequency of vibration varying from 10 to 50 to 10 Hz approximately every 3 minutes. The microphone shall be connected in a test circuit providing for a carbon current of 50 milliamperes. The test shall be conducted for a period of one hour. The current shall be turned on for 2 minutes and off for 2 minutes alternately for the duration of the test.

4.6.14 Blast test for microphone unit M-51/UR (see 3.5.9).

4.6.14.1 Blast test for microphone unit M-51/UR. The microphone unit shall be subjected to 30 rounds of blast at a peak pressure of 9.5 pounds per square inch, by using one of the following methods:

a. The microphone unit shall be mounted so that the pressure produced by ammunition explosion strikes the face of the microphone unit under test. A transducer capable of operating under a peak pressure of twelve pounds per square inch or more and of a known calibration shall be placed in the same relative position as the microphone under test. The voltage produced by this transducer shall be fed into a fast response oscilloscope, with an oscilloscope camera available. Photographs of the pressure produced on the transducer by the ammunition explosion shall be recorded at the 1st, 10th, 20th, and 30th round to show instant pressure.

b. The microphone unit shall be elevated at least 6 feet above the ground and located at least 12 feet, for a 5 inch 25 caliber gun, or 14 feet, for a 5 inch 38 caliber gun, from the gun muzzle in the plane through the muzzle perpendicular to the gun axis. The front edge of the microphone unit shall be positioned so that its axis will be coincident with that of the gun muzzle.

4.6.14.2 Blast test for microphone unit M-51/UR. After the above conditioning, the microphone unit shall meet the requirements of 3.5.9.

4.6.15 Impact test (see 3.6.6).

4.6.15.1 Impact test (Microphone Unit M-6A/UR). The microphone unit shall be subjected to the following combination of tests, which shall be repeated 3 (three) times:

a. Five cycles of exposure to moisture resistance tests, as specified in 4.6.7.
b. Exposure to the temperature cycling test as specified herein, except that the temperatures shall be maintained for 2-hour periods, as specified in 4.6.9.
c. Impact test shall consist of 10 (ten) random drops. The drops shall be from a 6-foot height to a concrete floor, covered with 0.125 (1/8) or 0.1875 (3/16) inch thick asphalt tile thoroughly cemented to the concrete floor, using a 4 (four) inches minimum thickness of cement.

4.6.15.2 Impact test (Microphone, Carbon M-51/UR). The microphone shall be subjected to 20 random drops from a 6-foot height to a covered concrete floor. The covering shall consist of 0.125 (1/8) or 0.1875 (3/16) inch thick asphalt tile thoroughly cemented to the concrete floor, using a 4 (four) inches minimum thickness of cement.

4.6.16 Anti-packing (see 3.5.7). The microphone unit shall be tested for surges, overload-current, and extended operation using the circuit on figure 3. The microphone unit shall not be conditioned prior to making the response measurements required to determine degradation in performance.

5. PACKAGING

5.1 Packaging. For acquisition purposes, the packaging requirements shall be as specified in the contract or order (see 6.2). When packaging of materiel is to be performed by DoD or in-house contractor personnel, these personnel need to contact the responsible packaging activity to ascertain packaging requirements. Packaging requirements are maintained by the Inventory Control Point's packaging activities within the Military Service or Defense Agency, or within the military service's system commands. Packaging data retrieval is available from the managing Military Department's or Defense Agency's automated packaging files, CD-ROM products, or by contacting the responsible packaging activity.

6. NOTES

(This section contains information of a general or explanatory nature which may be helpful, but is not mandatory.)

6.1 Intended use. Microphone Units M-6A/UR and M-51/UR are intended to be used in military aircraft, boats, tanks and vehicles as a part of a boom-suspended or other type of microphone.

6.2 Acquisition requirements. Acquisition documents should specify the following:

a. Title, number, and date of the specification.
b. Type required.
c. Number of first article samples required (10 sample units of each item cited in section 1 are generally required).
d. Packaging (see 5.1).
e. Marking and shipping of samples.
f. Place of final inspection.

6.3 Tin whisker growth (see 3.3.5.2). The use of alloys with tin content greater than 97 percent, by mass, may exhibit tin whisker growth problems after manufacture. Tin whiskers may occur anytime from a day to years after manufacture and can develop under typical operating conditions, on products that use such materials. Conformal coatings applied over top of a whisker-prone surface will not prevent the formation of tin whiskers. Alloys of 3 percent lead, by mass, have shown to inhibit the growth of tin whiskers. For additional information on this matter, refer to ASTM-B545 (Standard Specification for Electrodeposited Coatings of Tin).

6.4 Subject term (key word) listing.

Acoustical characteristics
Calibrating
Decibels
Frequency response
Grid
Plastic material
Signal spectrum
Sound pressure level
Sound source

6.5 Environmentally preferable material. Environmentally preferable materials should be used to the maximum extent possible to meet the requirements of this specification. As of the dating of this document, the U.S. Environmental Protection Agency (EPA) is focusing efforts on reducing 31 priority chemicals. The list of chemicals and additional information is available on their website http://www.epa.gov/osw/hazard/wastemin/priority.htm. Included in the EPA list of 31 priority chemicals are cadmium, lead, and mercury. Use of these materials should be minimized or eliminated unless needed to meet the requirements specified herein (see Section 3).

6.6 Amendment notations. The margins of this specification are marked with vertical lines to indicate modifications generated by this amendment. This was done as a convenience only and the Government assumes no liability whatsoever for any inaccuracies in these notations. Bidders and contractors are cautioned to evaluate the requirements of this document based on the entire content, irrespective of the marginal notations.

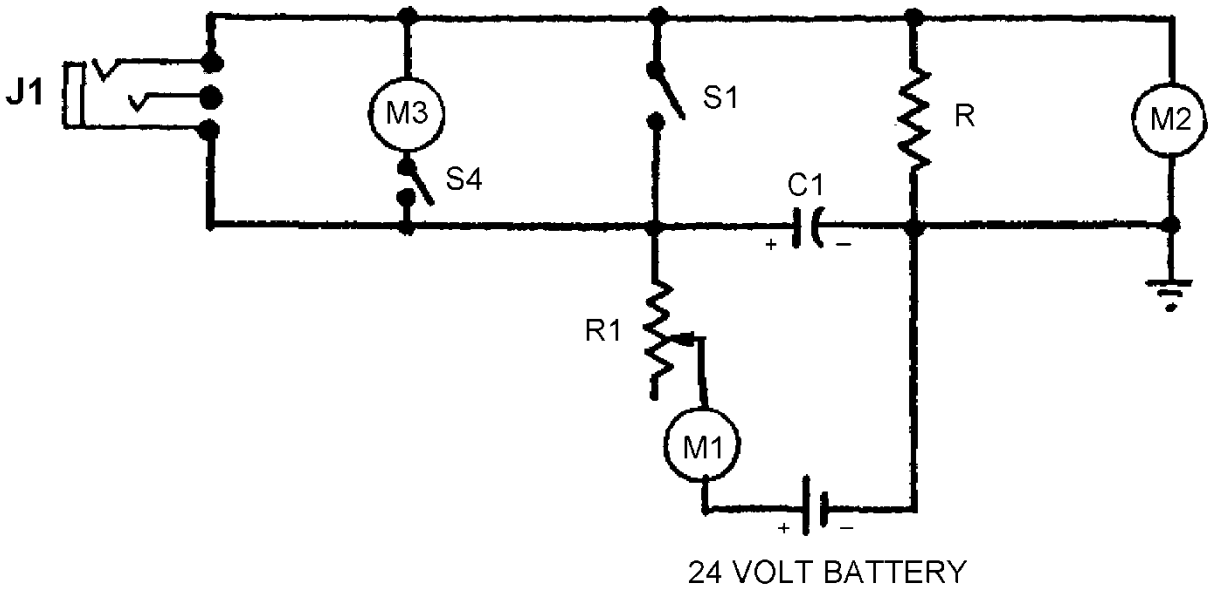

Components List:

J1 – Microphone Jack, 3-Contact
S1 – Switch, SPST
C1 – Capacitor, 100 MFD, 50 Volts Electrolytic
R1 – Variable Resistor, 400 OHM
R – Resistor, 100 OHM
M1 – Milliammeter, 0-200 MA, DC.
M2 – Electronic Voltmeter, Ballantine Model 300, or equal
M3 – Voltmeter, 0-10 Volts, DC, 1000 OHMS per Volt, minimum
S4 – Switch push button, single contact

FIGURE 3. Conditioning of microphone unit (see 4.6.2.3).

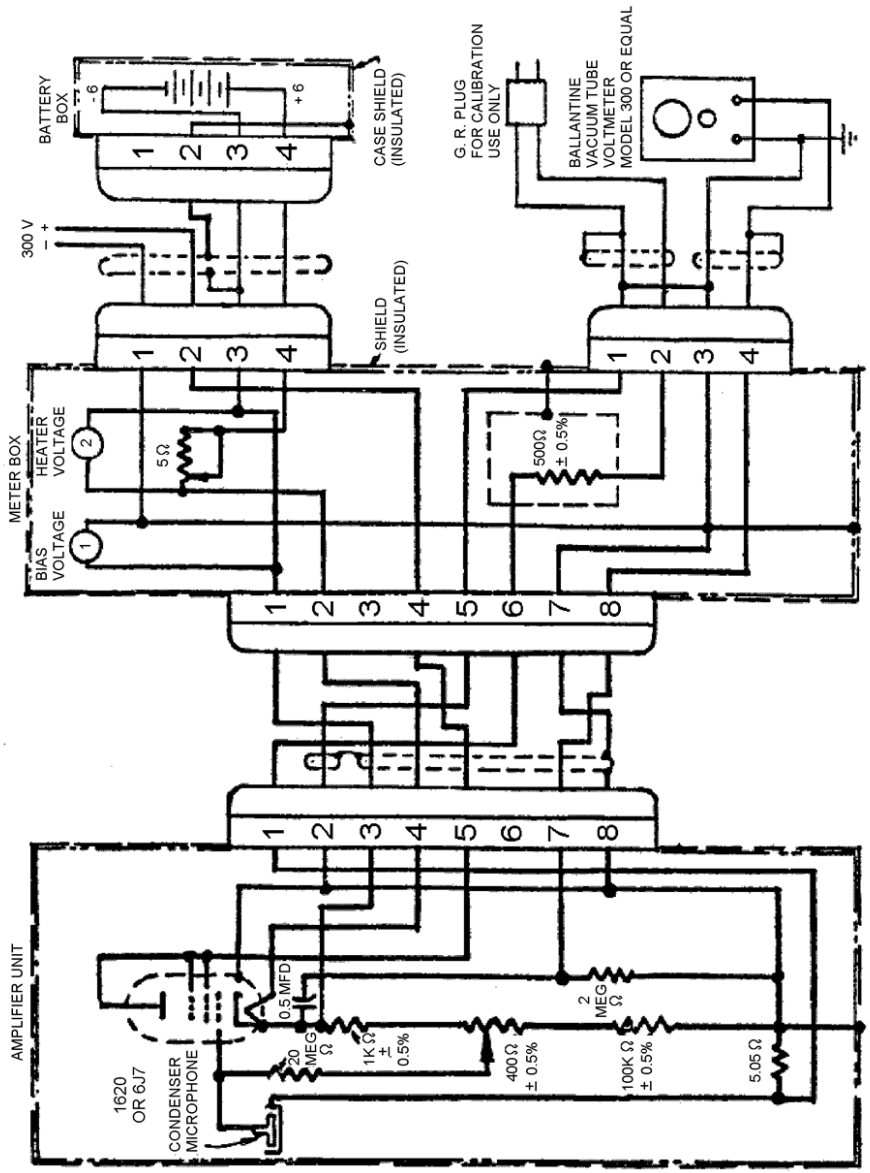

FIGURE 4. Response tests (see 4.6.2.1).

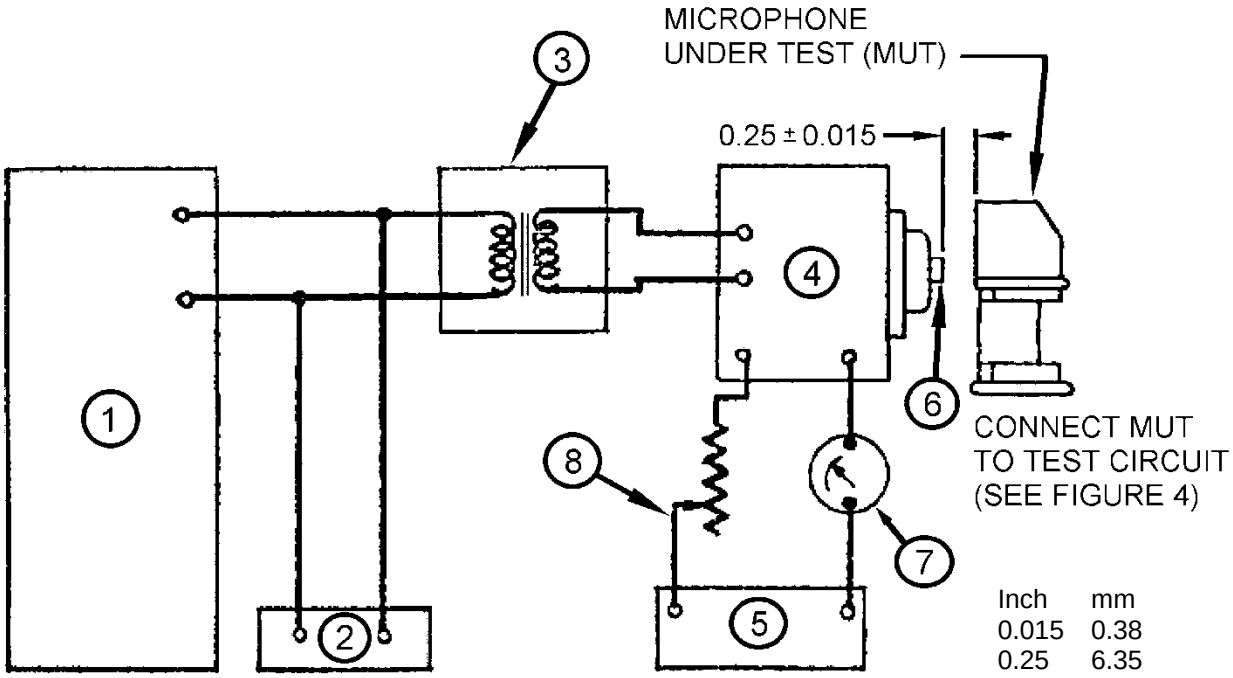

COMPONENTS LIST:

1. Audio oscillator – General Radio, type no. 713-B or equal. (connect for 50 OHM output).
2. Output meter – General Radio type no. 483-C or equal.
3. Transformer – General Radio no. 541-C or equal.
4. Driver unit – Western Electric type 555 Receiver, or equal.
5. Storage battery – 12 volts.
6. Coupler for Western Electric (no. 555) receiver in accordance with drawing SC-D-10598.
7. Ammeter, 0-2 AMPS, DC
8. Resistor, variable, 0-5 OHMS, 10 WATTS, adjusted to maintain reading of 1.5 AMPS on meter.

NOTES:

1. Dimensions are in inches.
2. Unless otherwise specified, tolerance is ± .010 (0.25 mm).
3. Metric equivalents are given for information only.

FIGURE 5. Sound source calibration (see 4.6.2.2)

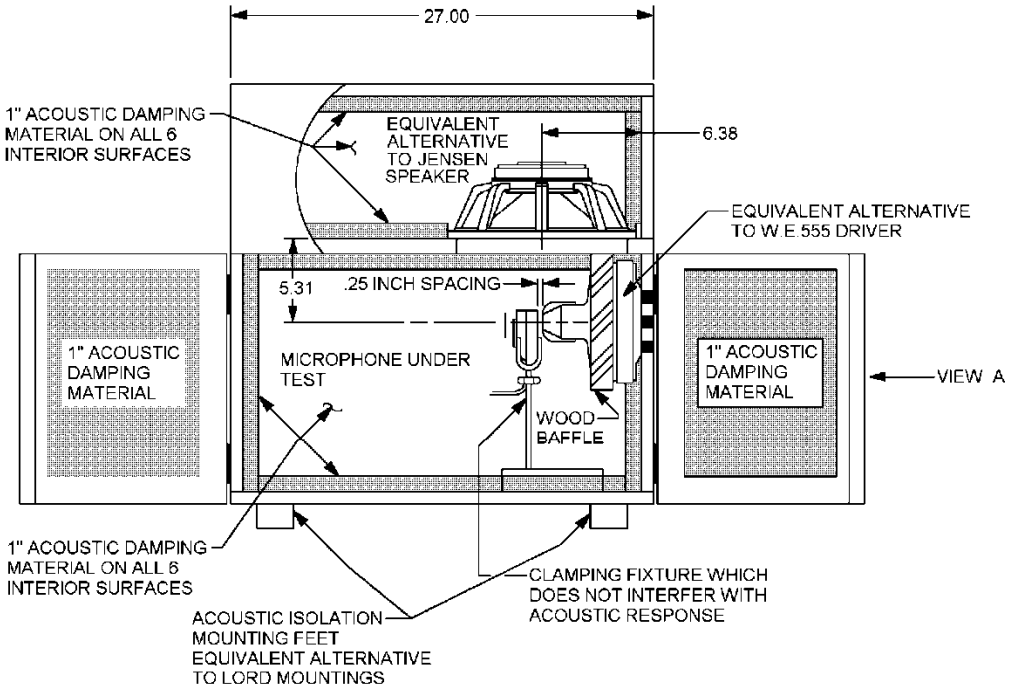

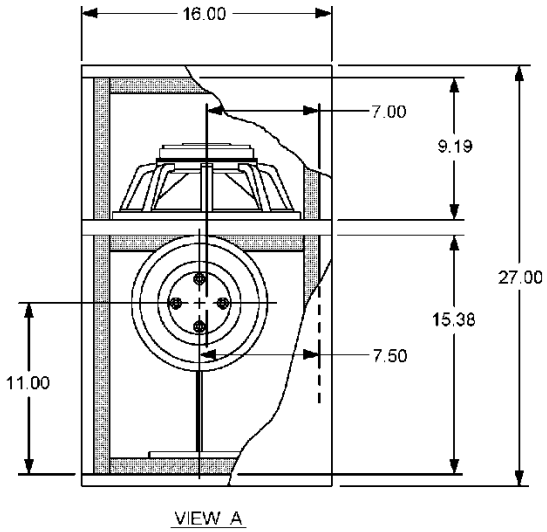

Inches	mm
.015	0.38
.250	6.35
1.000	25.40
5.310	134.87
6.38	162.05
7.000	177.80
7.500	190.50
9.19	233.43
11.00	279.40
15.38	390.65
16.00	406.40
27.00	685.80

NOTES:

1. Dimensions are in inches, tolerances ± .015 unless otherwise noted.
2. Metric equivalents are given for information only.
3. All acoustic damping material will be equivalent to or better than Akoustikos felt and Acoustic-celotex.

FIGURE 6. Signal-to-noise ratio test (see 4.6.4).

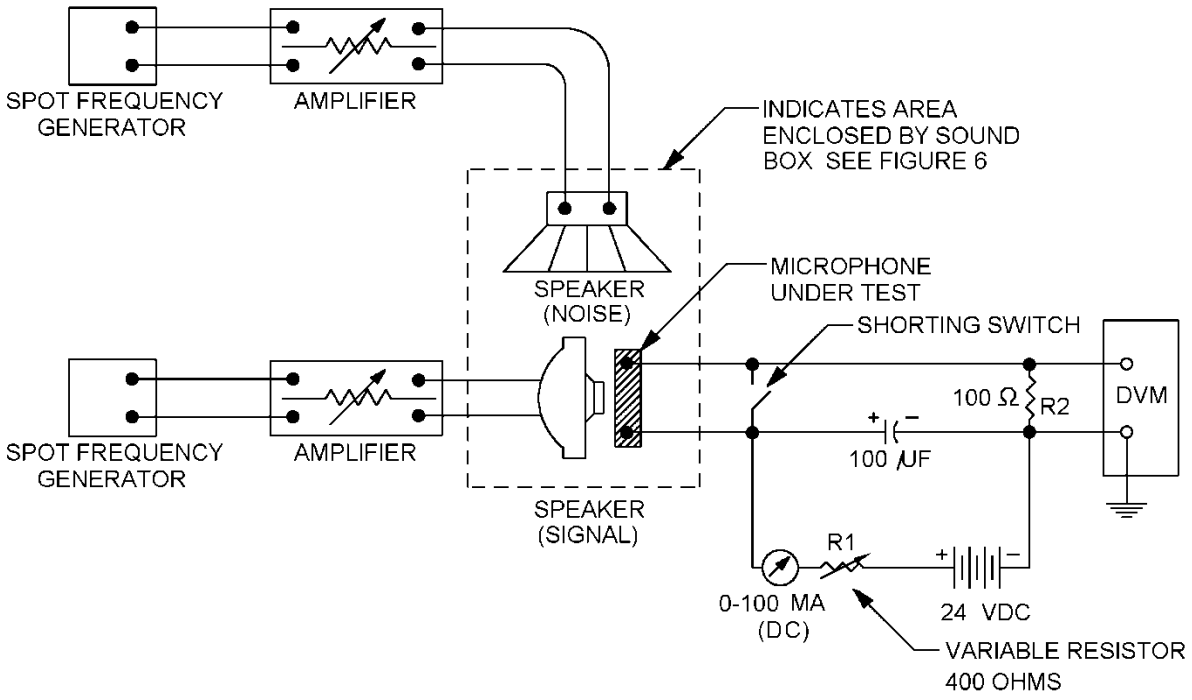

FIGURE 7. Test circuit for signal-to-noise test (see 4.6.4)

CONCLUDING MATERIAL

Custodians:
Army – CR
Air Force – 85
DLA - CC

Review activities:
Army – EA, MI

Preparing activity:
DLA - CC

(Project 5965-2011-006)

NOTE: The activities listed above were interested in this document as of the date of this document. Since organizations and responsibilities can change, you should verify the currency of the information above using the ASSIST Online database at https://assist.daps.dla.mil.