INCH-POUND
MIL-DTL-55181F
1 August 2012
SUPERSEDING
MIL-DTL-55181E
10 March 2008

DETAIL SPECIFICATION

CONNECTORS, PLUG AND RECEPTACLE, INTERMEDIATE POWER (ELECTRICAL, WATERPROOF), TYPE MW, GENERAL SPECIFICATION FOR

This specification is approved for use by all Departments and Agencies of the Department of Defense.

1. SCOPE

1.1 Scope. This specification covers the general requirements for a series of center-lock coupling screw, waterproof, polarized, multi-contact, intermediate power connectors for interconnection of power and control circuits on electronic equipment (see 6.1).

1.2 Classification.

1.2.1 Part or Identifying Number (PIN). The PIN consists of the letter M, the basic specification number, a forward slash, the specification sheet number, a dash, a number for the cable size accommodation (when applicable), and a finish designator, (see 3.1) as shown in the following example:

Note: Cadmium is the default finish. No finish designator is required for cadmium finish.

1.2.2 Cable size accommodation. When applicable, the cable size accommodation is indicated by a number assigned in a specific specification sheet.

Comments, suggestions, or questions on this document should be addressed to DLA Land and Maritime-VAI, P.O. Box 3990, Columbus OH 43218-3990 or emailed to CircularConnector@dla.mil. Since contact information can change, you may want to verify the currency of this address information using the ASSIST Online database at https://assist.dla.mil.

2. APPLICABLE DOCUMENTS

2.1 General. The documents listed in this section are specified in sections 3, 4, or 5 of this specification. This section does not include documents cited in other sections of this specification or recommended for additional information or as examples. While every effort has been made to ensure the completeness of this list, document users are cautioned that they must meet all specified requirements documents cited in sections 3, 4, or 5 of this specification, whether or not they are listed.

2.2 Government documents.

2.2.1 Specifications, standards, and handbooks. The following specifications, standards, and handbooks form a part of this document to the extent specified herein. Unless otherwise specified, the issues of these documents are those cited in the solicitation or contract.

FEDERAL STANDARDS

FED-STD-H28	-	Screw-Thread Standards for Federal Services.

DEPARTMENT OF DEFENSE STANDARDS

MIL-STD-202	-	Test Methods for Electronic and Electrical Component Parts.
MIL-STD-790	-	Standard Practices for Established Reliability and High Reliability Qualified Products List (QPL) Systems For Electrical, Electronic, and Fiber Optic Parts Specifications.
MIL-STD-810	-	Test Method Standard for Environmental Engineering Considerations and Laboratory Tests.
MIL-STD-889	-	Dissimilar Metals.
MIL-STD-1285	-	Marking of Electrical and Electronic Parts.
MIL-DTL-45204	-	Gold Plating, Electrodeposited.
MIL-DTL-81706	-	Chemical Conversion Materials for Coating Aluminum and Aluminum Alloys.

(See supplement 1 for list of specification sheets.)

(Copies of these documents are available online at https://assist.dla.mil/quicksearch/ or from the Standardization Document Order Desk, 700 Robbins Avenue, Building 4D, Philadelphia, PA 19111-5094.)

2.2.2 Other Government documents, drawings, and publications. The following other Government documents, drawings, and publications form a part of this document to the extent specified herein. Unless otherwise specified, the issues of these documents are those cited in the solicitation or contract.

DRAWINGS

ELECTRONIC COMMAND

SC-A-46439	-	List of Accessories for Package Tester.

(Unless otherwise indicated, copies of the above specifications, standards, and drawings required by suppliers in connection with specific procurement functions should be obtained from the procuring activity or as directed by the procuring activity or as directed by the contracting officer. Both the title and number or symbol should be stipulated when requesting copies.)

2.3 Non-Government publications. The following documents form a part of this document to the extent specified herein. Unless otherwise specified, the issues of these documents are those cited in the solicitation or contract.

ASTM INTERNATIONAL

ASTM A582/A582M	-	Bars, Free Machining Stainless Steel.
ASTM B16/B16M	-	Rod, Bar, Free Cutting, Bar and Shapes for use in Screw Machines.
ASTM B139/B139M	-	Rod, Phosphor Bronze, Bar, and Shapes.
ASTM B194	-	Copper-Beryllium Alloy, Plate, Sheet, Strip, and Rolled Bar.
ASTM B196/B196M	-	Rod and Bar, Copper-Beryllium Alloy.
ASTM-B841	-	Standard Specification for Electrodeposited Coatings of Zinc Nickel Alloy Deposits.
ASTM B487	-	Measurement of Metal and Oxide Coating Thickness by Microscopical Examination of a Cross Section.
ASTM B488	-	Gold for Engineering Uses, Electrodeposited Coatings of.
ASTM B567	-	Measurement of Coating Thickness by the Beta Backscatter Method.
ASTM B568	-	Measurement of Coating Thickness by X-Ray Spectrometry.
ASTM B748	-	Measurement of Thickness of Metallic Coatings by Measurement of Cross Section with a Scanning Electron Microscope.
ASTM D2000	-	Rubber Products in Automotive Applications.
ASTM D5948	-	Compounds, Molding, Thermosetting.

(Copies of these documents are available from http://www.astm.org/ or from ASTM International, P.O. Box C700, 100 Barr Harbor Drive, West Conshohocken, PA 19428-2959.)

ELECTRONIC COMPONENTS INDUSTRY ASSOCIATION (ECIA)

EIA-364	-	Electrical Connector/Socket Test Procedures Including Environmental Classifications.
EIA-364-09	-	Connectors and Contacts, Electrical, Durability Test Procedure for.
EIA-364-20	-	Connectors, Sockets and Coaxial Contacts, Electrical, Withstanding Voltage, Test Procedures for.
EIA/ECA-364-21	-	Insulation Resistance Test Procedure for Electrical Connectors, Sockets, and Coaxial Contacts.
EIA/ECA-364-26	-	Connectors, Contacts and Sockets, Electrical, Salt Spray Test Procedure for.
EIA-364-28	-	Connectors and Sockets, Electrical, Vibration Test Procedure for.
EIA/ECA-364-29	-	Contact Retention Test Procedure for Electrical Connectors.
EIA-364-31	-	Connectors and Sockets, Electrical, Humidity Test Procedure for.
EIA-364-32	-	Connectors and Sockets, Thermal Shock (Temperature Cycling), Test Procedure for.

(Copies of these documents are available online at http://eciaonline.org or from the Electronic Components Industry Association (ECIA), 1111 Alderman Dr., Suite 400, Alpharetta, GA 30005-4175.)

INTERNATIONAL ORGANIZATION FOR STANDARDIZATION (ISO)

ISO 10012 - Measurement Management Systems – Requirements for Measurement Processes and Measuring Equipment – First Edition.

(Copies of these documents are available online at http://www.iso.ch or from the International Organization for Standardization American National Standards Institute, 11 West 42nd Street, 13th Floor, New York, NY 10036.)

NCSL INTERNATIONAL

NCSL Z540.3 - Requirements for the Calibration of Measuring and Test Equipment.

(Copies of these documents are available online at http://www.ncsli.org or from NCSL International, 2995 Wilderness Place, Suite 107 Boulder, Colorado 80301-5404.)

SAE INTERNATIONAL

SAE-AMS-QQ-N-290	-	Nickel Plating (Electrodeposited).
SAE-AMS-QQ-P-416	-	Plating, Cadmium (Electrodeposited).
SAE-AMS2404	-	Nickel, Electroless, Plating.
SAE-AMS2454	-	Plating, Electroless Nickel, Codeposited with Polytetrafluoroethylene (PTFE).

(Copies of these documents are available online at http://www.sae.org or from SAE International, 400 Commonwealth Drive, Warrendale, PA 15096-0001, and Tel: 877-606-7323 (inside USA and Canada) or 724-776-4970 (outside USA), email at CustomerService@sae.org.)

2.4 Order of precedence. Unless otherwise noted herein or in the contract, in the event of a conflict between the text of this document and the references cited herein (except for related specification sheets), the text of this document takes precedence. Nothing in this document, however, supersedes applicable laws and regulations unless a specific exemption has been obtained.

3. REQUIREMENTS

3.1 Specification sheets. The individual item requirements shall be as specified herein and in accordance with the applicable specification sheet. In the event of any conflict between the requirements of this specification and the specification sheet, the latter shall govern.

3.2 Qualification. Connectors furnished under this specification shall be products that are authorized by the qualifying activity for listing on the applicable qualified products list before contract award (see 4.7 and 6.3).

3.2.1 Qualified Products List (QPL) system. The manufacturer shall establish and maintain a quality system that allows parts that are covered by this specification to be listed on the QPL. Requirements for this system are specified in MIL-STD-790.

3.3 Materials.

3.3.1 Material requirements. The materials used to manufacture these connectors shall be as specified herein. When a definite material is not identified, a material shall be used which will enable the connectors to meet all requirements of this specification. Acceptance or approval of a constituent material shall not be construed as a guaranty of acceptance of the finished product.

3.3.2 Recycled, recovered, or environmentally preferable materials. Recycled, recovered, or environmentally preferable materials should be used to the maximum extent possible, provided that the material meets or exceeds the operational and maintenance requirements, and promotes economically advantageous life cycle costs.

3.3.3 Metals and finishes. All exposed metal parts, other than electrical contacts, may be aluminum, aluminum alloy, brass, steel or corrosion resistant steel.

3.3.3.1 Dissimilar metals. When dissimilar metals are used in intimate contact with each other, protection against galvanic corrosion shall be provided. The use of dissimilar metals in contact, which tend toward active galvanic corrosion (particularly brass, copper, or steel used in contact with aluminum or aluminum alloy) is not acceptable. However, metal plating of dissimilar base metals to provide similar or suitable abutting surfaces is permitted. The use of dissimilar metals separated by a suitable insulating material is also permitted. Dissimilar metals and compatible couples are defined in accordance with MIL-STD-889.

3.3.3.2 Pure tin. The use of pure tin, as an underplate or final finish, is prohibited both internally and externally. Tin content of connectors, their components and solder shall not exceed 97 percent, by mass. Tin shall be alloyed with a minimum of 3 percent lead, by mass (see 6.4).

3.3.4 Inserts.

3.3.4.1 Material requirements. Insert material shall be in accordance with ASTM D5948, diallyl ortho-phthalate, type SDG-F, or GDF-30F.

3.3.4.2 Construction. Inserts shall be designed and constructed with proper radii so they will not readily chip, crack, or break in assembly or normal service. The inserts shall be non-removable, mechanically retained in the shell.

3.3.5 Rubber. Rubber material shall be in accordance with ASTM D2000.

3.3.6 Contacts.

3.3.6.1 Contact outer sleeve (pin and socket). The sleeve of the pin and socket shall be made of brass in accordance with ASTM B16/B16M.

3.3.6.2 Male contacts. Male contacts shall be made of brass in accordance with ASTM B16/B16M.

3.3.6.3 Female contacts. Female contacts shall be of the closed entry type. The spring contact portion of the socket shall be beryllium copper in accordance ASTM B139/B139M, ASTM B194, or ASTM B196/B196M.

3.3.6.4 Contact finish. When tested as specified in 4.9.21, the contact finish shall meet the requirements as specified herein.

3.3.6.5 Overall or optional localized contact finish. Nonremovable contacts shall have a finish as specified in 3.3.6.5.1 or 3.3.6.5.2. Each desired finish shall be qualified.

3.3.6.5.1 Overall finish. Contact body shall be gold plated in accordance with ASTM B488, type II, code C, class 1.27 (50 microinches) or in accordance with MIL-DTL-45204 type II, class 1, .00005 inches (50 microinches) minimum thickness (see 4.9.21). The entire surface of the contact body shall be nickel underplated in accordance with SAE-AMS-QQ-N-290, class 2, 30 to 150 microinches (0.00076 to 0.0038 mm) minimum thickness. Silver shall not be used as an underplate.

3.3.6.5.2 Localized finish, female (socket) contacts (2 piece contacts with solid body and clip). Contact clip (a separate spring contact body or pressure member produced from a base material of stamped and formed beryllium-copper) shall be gold plated in accordance with ASTM B488, type II, code C, class 1.27 (50 microinches) or in accordance with MIL-DTL-45204 type II, class 1, .00005 inches (50 microinches) minimum thickness (see 4.9.21). Contact body of machined brass shall be gold plated in accordance with ASTM B488 or MIL-DTL-45204 (any type), .000015 inches (15 microinches) minimum thickness. The entire surface of the contact body shall be nickel underplated in accordance with SAE-AMS-QQ-N-290, class 2, 30 to 150 microinches (0.00076 to 0.0038 mm) minimum thickness. Silver shall not be used as an underplate.

3.3.6.5.3 Localized finish, male (pin) contacts. Contact mating surfaces (electrical engagement area) shall be gold plated in accordance with ASTM B488, type II, code C, class 1.27 (50 microinches) or in accordance with MIL-DTL-45204 type II, class 1, .00005 inches (50 microinches) minimum thickness (see 4.9.21) applied to areas X and Y (see figure 1 and figure 2) as applicable. All other body surfaces shall be finished with a minimum gold thickness of 15 microinches, in accordance with ASTM B488 or MIL-DTL-45204 (any type). The entire surface of the contact body shall be nickel underplated in accordance with SAE-AMS-QQ-N-290, class 2, 30 to 150 microinches (0.00076 to 0.0038 mm) minimum thickness. Silver shall not be used as an underplate.

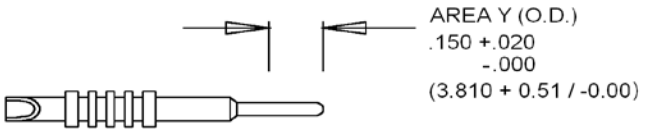

NOTE:
1. Dimensions are in inches. Metric equivalents are given for information only.

FIGURE 1. Areas of application of localized finish, pin (male) contacts with solder cups.

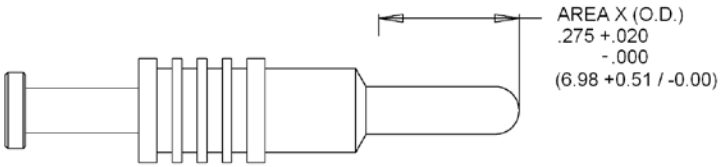

NOTE:
1. Dimensions are in inches. Metric equivalents are given for information only.

FIGURE 2. Areas of application of localized finish, pin (male) contacts with turrets (posts).

3.3.7 Nose piece. The nose piece shall be hardened alloy steel capable of meeting the requirements of this specification.

3.3.8 Jack screw and handle. Jack screw and handle shall be stainless steel, class 303, condition A, in accordance with ASTM A582/A582M.

3.3.9 Finish. When no finish designator is specified, the finish on exposed surfaces, except the jackscrew and handle assembly, shall be cadmium plated in accordance with SAE-AMS-QQ-P-416, type II, class 1, lusterless olive drab (note: cadmium is the default finish and no finish designator shall be specified in the PIN when cadmium finish is required). Alternative finishes, including nickel fluorocarbon polymer , zinc nickel, and black electroless nickel, shall be specified in the PIN with a letter designator when required. Alternative finishes shall be in accordance with the following finish designators:

T - Nickel fluorocarbon polymer. Nickel with fluorocarbon polymer additives over a suitable underplate in accordance with SAE-AMS2454, to withstand salt spray corrosion testing in accordance with EIA/ECA-364-26, test condition B. Color shall be nonreflective, conductive, and shall meet the requirements as specified herein.

F - Electroless nickel. Lusterless black electroless nickel in accordance with SAE-AMS2404, class 3 for molded/extruded alloy or class 4 for heat treated alloys, grade B. Conversion coat shall be in accordance with MIL-DTL-81706, type II. Finish shall withstand salt spray corrosion testing in accordance with EIA/ECA-364-26, test condition B.

Z - Zinc-nickel alloy in accordance with ASTM B841, Type D (black), over a suitable underplate to withstand salt spray corrosion testing in accordance with EIA/ECA-364-26, test condition B. Color shall be nonreflective, conductive, and shall meet the requirements as specified herein.

3.3.9.1 Flaking. In areas where the finish has been coined, minor flaking of the plating in the roll-over area is acceptable, providing such flaking does not affect the functionality of the connector.

3.3.10 Fungus resistance. Finishes and materials used in the construction of connectors shall be fungus inert in accordance with MIL-STD-810, method 508.6. Amount of growth: none. Rating: 0.

3.3.11 Threaded parts. Unless otherwise specified (see 3.1), all threaded parts shall be in accordance with FED-STD-H28.

3.4 Design and construction. Connectors shall be of the design, physical dimensions, and construction specified to withstand the handling and maintenance expected in installation and normal use, and shall comply with the requirements specified herein (see 3.1).

3.4.1 Castings. Castings shall be of uniform quality and conditions, and free from harmful cracks, shrinkage, porosity, gas holes, foreign matter, and other injurious defects. The surface of the castings shall be free from pits, porous areas, fins, ridges, modules, raised metal, and scale. All castings shall be completely cleaned prior to presentation for inspection. Castings shall not be plugged or welded, nor shall imperfections be filled in. Parting lines, gates, and vents shall be neat and clean and present a good workmanlike appearance.

3.4.2 Molded parts. Molded parts shall be uniform in quality, condition, and color. The molded parts shall be clean, smooth, and free from porous areas, foreign materials, weak sections, bubbles, flash, and any other detrimental defects. Inserts shall be designed with suitable sections and radii that will not readily chip or break in assembly or normal use. The contact retaining system shall be free of foreign material, adhesive, or any obstruction that would prevent smooth contact insertion and positive retention.

3.5 Contact arrangements. Contact arrangements in inserts shall be as specified in the individual specification sheets (see 3.1).

3.6 Performance. The connectors shall be designed to meet the all requirements specified herein (see 3.1).

3.6.1 Dielectric withstanding voltage. There shall be no arcing, dielectric breakdown, or damage when the connectors are tested as specified in 4.9.3. The altitudes and corresponding test potentials shall be as specified in table I.

TABLE I. Test voltages.

Altitude	12 AWG contacts (volts, ac, rms)	20 AWG contacts (volts, ac, rms)
Sea level	2,000	1,500
50,000 feet (15.24 Km)	750	500

3.6.2 Insulation resistance. When tested as specified in 4.9.4, the insulation resistance shall not be less than 1,000 megohms.

3.6.3 Air leakage. When tested as specified in 4.9.5, the connectors (plugs and receptacles) shall be capable of withstanding an air pressure of 2.5 psi (10.24 kPa) when applied to the contact face, and then to the rear of the plug or receptacle, without leakage developing through the body.

3.6.4 Interchangeability. Mated connectors, including individual plugs and receptacles, having the same Part or Identifying Number (PIN) shall be completely interchangeable with each other with respect to installation and performance as specified herein and the applicable specification sheet (see 3.1). Reliance shall not be placed on any unspecified dimension, characteristics, etc. When tested as specified in 4.9.6, like units, assemblies, and subassemblies shall be interchangeable without modification, and individual items shall not be handpicked for fit.

3.6.5 Contact resistance. When connectors are tested as specified in 4.9.7, the voltage drop across the mating contact terminals shall not exceed 20 millivolts.

3.6.6 Humidity. Mated and unmated connectors shall be tested as specified in 4.9.8. Following the test, the connectors shall meet the following electrical requirements; dielectric withstanding voltage (sea level) (see 3.6.1), insulation resistance (see 3.6.2), contact resistance (see 3.6.5), and air leakage requirements (see 3.6.3).

3.6.7 Insert strength. When tested as specified in 4.9.9, the connectors shall be capable of withstanding the force specified without the inserts cracking, breaking, or the center lock nut rotating or breaking loose from the insert.

3.6.8 Contact retention. The individual contacts shall be capable of withstanding an axial load of 10 pounds (4.54 kg) minimum when tested as specified in 4.9.10.

3.6.9 Temperature cycling. During the fifth cycle of the test specified in 4.9.11, the connectors shall be capable of being mated and unmated. Following the test, the connectors shall meet the following electrical requirements; dielectric withstanding voltage (sea level) (see 3.6.1), insulation resistance (see 3.6.2), contact resistance (see 3.6.5), and air leakage requirements (see 3.6.3).

3.6.10 Durability. Following testing as specified in 4.9.12, the connectors shall show no evidence of the following changes:

a. Uneven wear on engaging hardware.
b. Uneven wear, galling, or removal of plating on contacts.
c. Free metal chips in the contact area.
d. Displaced, bent, or broken contacts.
e. Pierced or broken inserts.
f. Wing blade shall not loosen, change shape, or be otherwise damaged.

Following the test, the connectors shall meet the following electrical requirements; dielectric withstanding voltage sea level (see 3.6.1), insulation resistance (see 3.6.2), contact resistance (see 3.6.5), and air leakage requirements (see 3.6.3).

3.6.11 Impact resistance of nosepiece. The connectors shall be capable of being mated and shall show no physical damage after being subjected to testing as specified in 4.9.13.

3.6.12 Vibration. When mated connectors are tested as specified in 4.9.14, there shall be no evidence of cracking, breaking or loosening of parts, and the plug shall not become disengaged from the receptacle. Following the test, connectors shall meet the following electrical requirements; dielectric withstanding voltage sea level (see 3.6.1), insulation resistance (see 3.6.2), contact resistance (see 3.6.5), and air leakage requirements (see 3.6.3).

3.6.13 Salt spray (corrosion). When connectors are tested as specified in 4.9.15, unmated connectors shall show no exposure of base material due to corrosion, which will adversely affect performance, and there shall not be sufficient corrosion to interfere with mating or unmating the connectors.

3.6.14 Immersion. When test as specified in 4.9.16, the connectors shall meet the insulation resistance requirements (see 3.6.2) and there shall be no evidence of water in the connector.

3.6.15 Bounce. After being tested as specified in 4.9.17, there shall be no evidence of loose parts or physical damage other than surface abrasions. Following the test, the connectors shall meet the following electrical requirements; dielectric withstanding voltage sea level (see 3.6.1), insulation resistance (see 3.6.2), contact resistance (see 3.6.5), and air leakage requirements (see 3.6.3).

3.6.16 Drop. After being tested as specified in 4.9.18, the connectors shall show no evidence of cracking, breaking, or loosening of parts. Following the test, the connectors shall then meet the following electrical requirements; dielectric withstanding voltage sea level (see 3.6.1), insulation resistance (see 3.6.2), contact resistance (see 3.6.5), and air leakage requirements (see 3.6.3).

3.6.17 Compression. There shall be no evidence of breakage or distortion following the test specified in 4.9.19.

3.6.18 Impact resistance of shell body. When connectors are tested as specified in 4.9.9, there shall be no evidence of breakage or distortion following testing.

3.7 Marking. Connectors are to be marked in accordance with MIL-STD-1285, method I, and shall include the PIN (see 3.1), the manufacturer's name or code symbol, and date code. The marking shall remain legible after completion of the tests specified herein.

3.7.1 JAN and J marking. The United States Government has adopted and is exercising legitimate control over the certification marks “JAN” and “J”, respectively, to indicate that items so marked or identified are manufactured to, and meet all the requirements of specifications. Accordingly, items acquired to, and meeting all of the criteria specified herein and in the applicable specifications shall bear the certification mark ”JAN” except that items too small to bear the certification mark “JAN” shall bear the letter “J”. The “JAN” or “J” shall be placed immediately before the part number except that if such location would place a hardship on the manufacturer in connection with such marking, the “JAN” or “J” may be located on the first line above or below the part number. Items furnished under contracts or orders which either permit or require deviation from the conditions or requirements specified herein or in the applicable specifications shall not bear “JAN” or “J”. In the event an item fails to meet the requirements of this specification and the applicable specification sheets, the manufacturer shall remove completely the military part number and the “JAN” or the “J” from the sample tested and also from all items represented by the sample. The “JAN” or “J” certification mark shall not be used on products acquired to contractor drawings or specifications. The United States Government has obtained Certificate of Registration Number 504,860 for the certification mark “JAN” and Registration Number 1,586,261 for the certification mark “J”.

Note: The “JAN” or “J” is not part of the PIN but indicates a certification.

3.7.2 Change effectivity. Unless otherwise specified by the preparing activity and/or the qualifying activity, all changes from the previous revision of MIL-DTL-55181 shall become effective within 90 days from the date of publication of the latest revision. QPL listed manufacturers who have concerns regarding possible changes to retention reporting requirements, should contact the Qualifying Activity for clarification.

3.7.3 Disposition of stock. Unless otherwise specified by the preparing activity and/or qualifying activity, qualified manufacturers and their selling agents or distributors may ship connectors and accessories manufactured in accordance with the previous revision of MIL-DTL-55181 and its associated specification sheets for a period of six months from the date of the latest revision, provided that form, fit and function requirements are not affected. This is to allow QPL manufacturers to sell previously manufactured stock, made in accordance with specifications in effect at the time of manufacture, but prior to the effective date of this revision.

3.8 Workmanship. Connectors and accessories shall be uniform in quality and free from defects. There shall be no evidence of poor molding, poor fabrication, or cracking of the insulator. There shall be no improperly assembled contacts, peeling or chipping of the plating or finish, or nicks and burrs on metal surfaces. The contacts shall be free from burrs or sharp corners that would damage the plating of mating connectors. Wire barrel ends shall be free from burrs or sharp corners that would damage or cut wires.

4. VERIFICATION

4.1 Classification of inspections. The inspection requirements specified herein are classified as follows:

a. Qualification inspection (see 4.4).

b. Conformance inspection (see 4.8).

4.2 Inspection conditions. Unless otherwise specified, all inspections shall be performed in accordance with the test conditions specified in EIA-364 and MIL-STD-202.

4.2.1 Verification testing. The following tests and test methods assure connector integrity within typical operating conditions and applications. Any deviations from test requirements specified herein must be coordinated with the qualifying activity prior to performance of the test. The test methods described herein are proven methods and shall be the accepted test method in cases of dispute.

4.2.2 Test equipment and inspection facilities. Test and measuring equipment and inspection facilities of sufficient accuracy, quality and quantity to permit performance of the required inspection shall be established and maintained by the contractor. The establishment and maintenance of a calibration system to control the accuracy of the measuring and test equipment (i.e. NCSL Z540.3, or ISO 10012) shall be required.

4.2.2.1 Automatic testing. The inspection for insulation resistance and dielectric withstanding voltage may be performed by automatic means, except during qualification testing. Insulation resistance and dielectric withstanding voltage may be performed simultaneously in less than one minute provided that the current flow in the circuit is zero before automatically proceeding to the next step. In addition, automatic test equipment shall be manually reset when failure occurs.

4.3 Materials inspection. Materials inspection shall consist of certification, supported by verifying data that the materials used in the fabricating these connectors are in accordance with the applicable specifications (see 3.1, 3.3.1, 4.9.2, and 6.2).

4.4 Qualification inspection. Qualification inspection shall be performed at a laboratory acceptable to the Government (see 6.3.1) on sample units produced with equipment and procedures normally used in production.

4.5 Test conditions.

4.5.1 Test fixture. Connector test samples can be mated with a test fixture to perform electrical testing provided all required test conditions are maintained.

4.5.2 Preconditioning. The contractor shall be permitted to precondition the connector samples prior to performing any electrical tests. The preconditioning shall consist of removing surface moisture from the connectors by wiping, drying, blowing, or heating. The application of heat shall be limited to 3 minutes. For unmated connectors subjected to immersion and humidity test, a 24-hour waiting period in an ambient room temperature with a relative humidity of 50 ±5% is permitted.

4.6 Preparation of samples. Preparation of samples for immersion, air leakage, and humidity testing.

a. Connector plug. The cable entry shall be sealed with a solid rubber plug having a length of approximately 6 inches (15.24 cm) and a diameter within + .005 inch (0.13 mm) of the minimum cable size specified in the individual specification sheets.

b. Connector receptacle. Connector receptacle shall be mounted using the normal mounting method so that only the front face is exposed to the water.

4.6.1 Sample size. Nine completely assembled plugs and receptacles from each specification sheet to be qualified shall be subjected to qualification inspections. Connector pairs shall be as specified in table II.

TABLE II. Mating characteristics.

Plug 1/	Mating receptacle
M55181/1	M55181/2-01
M55181/3	M55181/4-01
M55181/5	M55181/6-01
M55181/7	M55181/8-01

1/ For dash numbers -01 through -05, inclusive.

4.6.2 Inspection routine. Sample connectors and contacts shall be subjected to the inspections specified in table III.

4.6.3 Failures. Failure to pass any one of the tests, as specified in table III shall be cause for refusal to grant qualification. All failures shall be attributed to the connector unless data is provided showing failure is due to the cable or test fixture. In such cases the cause of failure may be rectified and the connectors retested. The test report shall clearly indicate all actions taken.

TABLE III. Qualification inspection.

Inspection	Requirement paragraph	Method paragraph	Group (pairs) 1/								
			1	2	3	4	5	6	7	8	9
Visual and mechanical	3.1, 3.3, 3.4, 3.7, and 3.8	4.9.2	U	U	U	U	U	U	U	U	U
Dielectric withstanding voltage (sea level)	3.6.1	4.9.3.1	U	U	U	U	U	U	U	U	U
Insulation resistance	3.6.2	4.9.4	U	U	U	U	U	U	U	U	U
Air leakage	3.6.3	4.9.5	U	U	U	U	U	U	U	U	U
Interchangeability	3.6.4	4.9.6	U	U	U	U	U	U	U	U	U
Contact resistance	3.6.5	4.9.7	M	M	M	M	M	M	M	M	M
Dielectric withstanding voltage (high altitude)	3.6.1	4.9.3.2	U	U	U	U	U	U	U	U	U
Humidity	3.6.6	4.9.8	U	M	---	---	---	---	---	---	---
Insert strength	3.6.7	4.9.9	M	M	M	---	---	---	---	---	---
Contact retention	3.6.8	4.9.10	M	M	M	---	---	---	---	---	---
Temperature cycling	3.6.9	4.9.11	M*	U	U	---	---	---	---	---	---
Durability	3.6.10	4.9.12	M	M	M	---	---	---	---	---	---
Impact resistance of nose piece	3.6.11	4.9.13	U	U	U	---	---	---	---	---	---
Vibration	3.6.12	4.9.14	---	---	---	M	M	M	---	---	---
Salt spray	3.6.13	4.9.15	---	---	---	U	U	U	---	---	---
Immersion	3.6.14	4.9.16	---	---	---	---	---	---	M*	U	U
Bounce	3.6.15	4.9.17	---	---	---	---	---	---	M	M	M
Drop	3.6.16	4.9.18	---	---	---	---	---	---	M	M	M
Compression	3.6.17	4.9.19	---	---	---	---	---	---	UP	UP	UP
Impact resistance body Shell	3.6.18	4.9.20	---	---	---	---	---	---	UP	UP	UP
Contact plating and finish thickness 2/	3.3.6.4 and 3.3.6.5	4.9.21									

1/ M - Mated plug and receptacle
U - Unmated plug and receptacle.
M* - For purposes of qualification inspection the three samples shall be configured as follows: One mated and two unmated
UP - Unmated plug.

2/ See 4.9.21.2 for sample sizes.

4.7 Verification of qualification. To retain qualification, the contractor shall verify, in coordination with the qualifying activity, the capability of manufacturing products which meet the requirements of this specification. Refer to the qualifying activity for the guidelines necessary to retain qualification to this specification. The contractor shall immediately notify the qualifying activity at any time that the inspection data indicates failure of the qualified product to meet the requirements of this specification.

4.8 Conformance inspection.

4.8.1 Inspection of product for delivery. Inspection of product for delivery shall consist of group A inspection. Except as specified in 4.8.7, delivery of products which have passed the group A inspection shall not be delayed pending the results of group B inspection.

4.8.2 Inspection lot. An inspection lot shall consist of all the connectors, counterpart receptacles, and plugs as indicated in each specification sheet, produced under essentially the same conditions and offered for inspection at one time.

4.8.3 Group A inspection. Group A inspection shall consist of the examinations and tests specified in table IV, and shall be made on the same set of sample units in the order shown.

4.8.3.1 Sampling plan (group A). Tests specified in table IV shall be performed on a production run basis. Samples shall be selected as specified in table V. If one or more defects are found, the lot shall be screened for that particular defect and defects removed. A new sample of parts shall be selected as specified in table IV and all group A tests shall be performed again. If one or more defects are found in the second sample, the lot shall be rejected and shall not be supplied to this specification.

TABLE IV. Group A inspection.

Inspection	Requirement paragraph	Method paragraph
Visual and mechanical examination	3.1, 3.3.1, 3.4, 3.7, and 3.8	4.9.2
Dielectric withstanding voltage (sea level)	3.6.1	4.9.3.1
Insulation resistance	3.6.2	4.9.4
Air leakage	3.6.3	4.9.5
Immersion	3.6.14	4.9.16

TABLE V. Lot and sample size.

Lot size	Samples
1 to 3	All
4 to 25	3
26 to 50	5
51 to 90	6
91 to 150	7
151 to 280	10
281 to 500	11
501 to 1,200	15
1,201 to 3,200	18
3,201 to 10,000	22
10,001 and over	29

4.8.4 Retention of qualification. To retain qualification, the contractor shall make the following reports available to the qualifying activity:

a. 12 month intervals. A summary of the results of both group A and group B tests performed for inspection of product for delivery, indicating as a minimum the number of lots that have passed and the number that have failed. The results of all reworked lots shall be identified and accounted for.

b. 36 month intervals. A summary of the results of group C tests performed for qualification inspection, including the number and mode of failures. If the summary of the test results indicates nonconformance with the specification requirements, and corrective action acceptable to the qualifying activity has not been taken, action may be taken to remove the failing product from the qualified products list (QPL).

4.8.5 No production. In the event that no production occurred during the reporting period, a report shall be submitted to the qualifying activity certifying that the company still has the capabilities and facilities necessary to produce the item. If during 2 consecutive reporting periods, there has been no production, the manufacturer may be required, at the discretion of the qualifying activity, to submit products for testing in accordance with the qualifying inspection requirements.

4.8.6 Rejected lots. If an inspection lot is rejected, the manufacturer may rework it to correct the defects, or screen out the defective units, and resubmit for reinspection. Resubmitted lots shall be inspected using the sample size of the next higher lot size specified in table V and shall not thereafter be tendered for acceptance unless the cause for rejection has been corrected, and correction action taken has been disclosed to the qualifying activity. Such lots shall be separate from new lots and shall be clearly identified as reinspected lots.

4.8.7 Disposition of sample units. If the lot is accepted, unwired samples may be delivered on the contract. The wired samples with removable contacts may be delivered on the contract provided the wired contacts are replaced with new contacts.

4.8.8 Group B inspection. Group B inspection shall consist of the tests specified in table VI, in the order shown, and shall be made on sample units which have been subjected to and shall have passed group A inspection.

TABLE VI. Group B inspection.

Inspection	Requirement paragraph	Method paragraph
Contact resistance	3.6.5	4.9.7
Contact retention	3.6.8	4.9.10
Interchangeability	3.6.4	4.9.6

4.8.8.1 Sampling plan. Samples shall be selected as specified in table V. Connectors shall be selected at random from production units. These inspections shall be performed at least once every 12 months.

4.8.8.2 Failures. No failures shall be allowed.

4.8.8.3 Rejected lots. If an inspection lot is rejected, the contractor may rework it to correct the defects, or screen out the defective units, and resubmit for reinspection. Such lots shall be separate from new lots, and shall be clearly identified as reinspected lots.

4.8.8.4 Disposition of sample units. Sample units, which have been subjected to group B inspection, are deliverable on the contract or purchase order.

4.8.9 Periodic inspection. Periodic inspection shall consist of group C. Except where the results of these inspections show noncompliance with the applicable requirements (see 6.3), delivery of products, which have passed groups A and B, shall not be delayed pending the results of these periodic inspections.

4.8.9.1 Group C inspection. Group C inspection shall consist of the tests specified in table VII, in the order shown. Group C inspection shall be made on sample units selected from inspection lots, which have passed the groups A and B inspection.

4.8.9.2 Sampling plan. For group C inspection, two mated pairs shall be selected from each specification sheet to be qualified. Connectors shall be selected at random from units produced within twelve (12) months preceding the initial reporting date, and every thirty-six (36) months thereafter. The pairs to be tested shall be those with the largest number of contacts to be qualified for that specification sheet. When necessary for inspection purposes, the manufacturer shall supply mating plugs or receptacles.

TABLE VII. Group C inspection. 1/

Inspection	Requirements paragraph	Method paragraph	Number of sample pairs
Humidity	3.6.6	4.9.8	2
Insert strength	3.6.7	4.9.9	2
Temperature cycling	3.6.9	4.9.11	2
Durability	3.6.10	4.9.12	2
Impact resistance of nose piece	3.6.11	4.9.13	2
Vibration	3.6.12	4.9.14	2
Salt spray	3.6.13	4.9.15	2
Bounce	3.6.15	4.9.17	2
Drop	3.6.16	4.9.18	2
Compression	3.6.17	4.9.19	2
Impact resistance of shell body	3.6.18	4.9.20	2
Contact plating and finish thickness	3.3.6.4 and 3.3.6.5	4.9.21	1/

1/ See 4.9.21.3 for sample sizes.

4.8.9.3 Failures. If one or more sample units fail to pass group C inspection, the entire lot shall be considered to have failed.

4.8.9.4 Disposition of sample units. Sample units, which have been subjected to group C inspection, shall not be delivered on the contract or purchase order.

4.8.9.5 Noncompliance. If a sample fails to pass group C inspection, the manufacturer shall notify the qualifying activity and the cognizant inspection activity of such failure and take corrective action on the materials or processes, or both, as warranted, and on all units of product which can be corrected and which are manufactured using essentially the same materials and processes, and which are considered subject to the same failure. Acceptance and shipment of the product shall be discontinued until corrective action acceptable to the qualifying activity has been taken. After the corrective action has been taken, group C inspection shall be repeated on additional sample units (all tests and examinations, or the test which the original sample failed, at the option of the qualifying activity). Groups A and B inspections may be reinstituted; however, final acceptance and shipment shall be withheld until the group C inspection has shown that the corrective action was successful. In the event of failure after reinspection, information concerning the failure shall be furnished to the inspection activity and the qualifying activity.

4.9 Methods of inspection.

4.9.1 Test methods. The following tests and test methods assure connector integrity within typical operating conditions and applications. Alternate industry standard test methods may be allowed with prior written approval from the qualifying activity. The test methods described herein are proven methods and shall be the accepted method in cases of dispute.

4.9.2 Visual and mechanical inspection. The connectors, accessories and piece parts shall be examined to verify that the dimensions, materials, design construction, marking, and workmanship are in accordance with the applicable requirements (see 3.1, 3.3.1, 3.4, 3.7, and 3.8).

4.9.3 Dielectric withstanding voltage (see 3.6.1).

4.9.3.1 At sea level. Unmated connector pairs shall be tested in accordance with EIA-364-20. The following details shall apply:

a. Points of application: The test voltage specified in table I shall be applied between each contact of the unmated connector with the remaining contacts connected together and to the shell.

b. The voltage shall be applied at a rate of approximately 500 volts (RMS of DC) per second until specified voltage is reached. Voltage shall be maintained for 60 +10, -0 seconds, and the connectors shall meet the requirements of 3.6.1.

4.9.3.2 At altitude. Unmated connector pairs shall be tested in accordance with EIA-364-20. The following details shall apply:

a. Special preparations or conditions: Unless otherwise specified (see 3.1), connectors shall be tested as specified in 4.9.3.1, while being maintained at a barometric pressure simulating an altitude of 50,000 ft (15.24 Km) (i.e. 87 torr).

b. The voltage for 50,000 ft (15.24 Km) as specified in table I shall be applied as described in 4.9.3.1 and the connector shall meet the requirements of 3.6.1.

4.9.4 Insulation resistance (see 3.6.2). When tested as specified in EIA/ECA-364-21, the connectors shall meet the requirements specified in 3.6.2.

4.9.5 Air leakage (see 3.6.3). Connectors shall be prepared for test as indicated in 4.6. Air pressure of 2.5 pounds per square inch (psi) (17.2 kilopascal) shall be applied to the contact face and them to the rear of the plug or receptacle, using the differential leakage tester as shown on figure 3 the following details apply:

a. The connector shall be attached to the leakage tester with its face against the appropriate jig of the leakage tester.

(1) With differential gage bypass valve open, the line valve and regulator shall be adjusted to apply 2.5 psi (17.2 kilopascal) to the connector face.
(2) After 15 seconds minimum the line valve shall be closed.
(3) Then the differential gage bypass valve shall be closed and the differential gage observed for not less than 30 seconds for a continuous change in the level of the two columns (a small momentary change when the bypass valve is closed is not evidence of leakage).
(4) The bypass valve shall then be opened before removal of the connector.

b. After completion of the above, the rear of the connector shall be attached to the proper jig and the test repeated.

c. After completion of the above, the face of the connector shall be attached to the appropriate jig of the tester, and the mating seal shall be tested by applying a differential pressure of 2.5 psi (117.2 kilopascals) to the seal lip around the contact face and repeating the test.

d. Connectors shall meet the requirements specified in 3.6.3.

Note: The use of water to visually indicate air leakage is also acceptable.

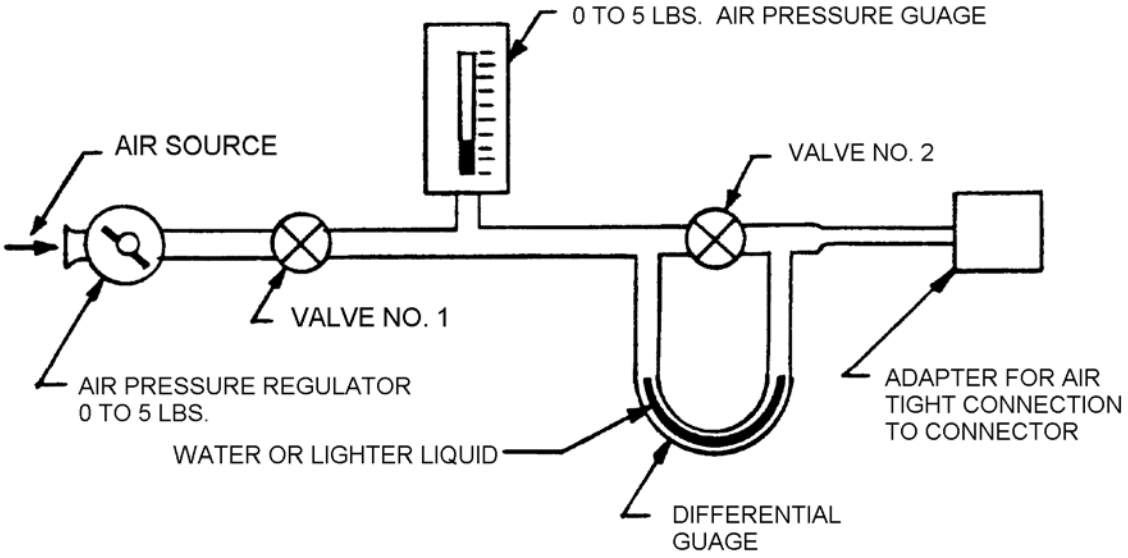

FIGURE 3. Diagram of air pressure test set-up.

4.9.6 Interchangeability (see 3.6.4).

Initial qualification - For initial qualification testing, dimensions shall be gauged using gauges specified in the applicable specification sheet to determine conformance to the physical interchangeability requirements of 3.6.4.

Group B inspection - For group B inspection, gauges may be used, or compliance to the dimensional call outs in the individual specification sheets may be used to verify compliance to the interchangeability requirements.

4.9.7 Contact resistance (see 3.6.5). The connector under test and a test fixture mating connector shall meet the interchangeability requirements of 3.6.4 relative to the mating dimensions. The following conditions shall apply:

a. The connectors shall be mated and a test current specified in table VIII shall be applied between corresponding terminals.

b. The voltage drop across the mating contact terminals shall be measured with a voltmeter, or an equivalent test method may be used to measure the resistance.

c. The combined error to the measurement shall not exceed 5 percent.

d. The connectors shall meet the requirements of 3.6.5.

TABLE VIII. Contact resistance current.

Contact size (AWG)	Current rating (amps)
12	35
20	7.5
20	7.5

4.9.8 Humidity (see 3.6.6). Connectors shall be tested as specified in EIA-364-31, method II, except steps 7a and 7b shall not be required. The following details shall apply:

a. After being prepared for test as specified in 4.6., half of the test sample connectors shall be mated and the other half shall be unmated.

b. The connectors shall meet the requirements of 3.6.6.

4.9.9 Insert strength (see 3.6.7). The connector shall be securely mounted and shall be tested with the applicable test connector as specified in the axial force 4.9.9.1, radial torque 4.9.9.2 and torque 4.9.9.3. The connectors shall meet the requirements of 3.6.7.

4.9.9.1 Axial force.

a. A force increasing from 0 to 400 pounds (0 to 181.4 kg) in not less than 10 or more than 20 seconds shall be applied for a period of 1 minute -0/+5 seconds parallel to the axis of the receptacle.

b. The force shall be applied first against the front and then the rear of the insert.

c. A pull of 400 pounds (181.4 kg) in not less than 10 or more than 20 seconds shall then be applied to the center coupling threaded part for a period of 1 minute -0/+5 seconds.

4.9.9.2 Radial torque.

4.9.9.2.1 Radial torque, connector plugs. A test receptacle shall be mated with the plug under test.

A gradually increasing radial torque shall be applied until 150 lbf in (17 Nm) is reached, and shall be maintained for a period of 1 minute -0/+5 seconds.

4.9.9.2.2 Radial torque, connector receptacles. The test shall be performed as specified in 4.9.9.2.1, except that a test connector plug shall be mated with the receptacle under test.

4.9.9.3 Torque. The complete test plug shall be mated with the receptacle under test. The following conditions shall apply:

a. A gradually increasing torque shall be applied to the test connector plug by means of a lever attached to the cable entry, until a torque of 150 lbf in (17 Nm) is reached.

b. The torque shall be maintained for a period of 1 minute -0/+5 seconds, and shall be applied both axially and radially.

4.9.10 Contact retention (see 3.6.8). Connectors shall be tested in accordance with EIA/ECA-364-29. The following details shall apply:

a. Sample connector with all contacts in place and insert mounted in the shell.

b. Axial load: Applied uniformly at a rate of approximately one pound per second (454 grams/sec).

c. Axial direction: Shall be applied in both directions; first one direction then the opposite direction.

d. The contacts shall meet the requirements of 3.6.8.

4.9.11 Temperature cycling (see 3.6.9). Connectors shall be tested in accordance with EIA-364-32. The following details shall apply:

a. Test connectors: Half of the connectors shall be mated.
b. Test condition letter: I.
c. Measurements after mating: During the last 5 minutes of each exposure in the fifth cycle:
   (1) Unmated connectors shall be mated and checked for contact resistance (see 3.6.5) and then unmated.
   (2) Mated connectors shall be checked for contact resistance.
d. Forty-five minutes after the end of the fifth cycle, all connectors shall be subjected to the mating and unmating operation at least once.
e. Following the test, the connectors shall meet the requirements of 3.6.9.

4.9.12 Durability (see 3.6.10). The connectors shall be tested in accordance with EIA-364-09. The connector assemblies shall be subjected to 500 cycles of mating and unmating at a rate not to exceed 300 cycles per hour. The mating and unmating shall be accomplished so that the plug and receptacle are completely separated during each cycle. The following details shall apply:

a. For each coupling, a torque of 12 ± 1 inch-pounds (1.36 Nm) shall be applied to the wing blade in the direction of the direction to tighten.
b. During the final coupling, the torque shall be maintained for at least 1 minute.
c. Connectors shall meet the requirements of 3.6.10.

4.9.13 Impact resistance nose piece (see 3.6.11). The following conditions shall apply:

a. The connector and plug under test shall be securely mounted to a hardwood block and subjected to a traverse blow of 40 inch-pounds (4.52 Nm). A weight of 2 pounds (907 grams) falling freely through a height of 20 inches (50.8 cm).
b. Two blows shall be delivered by a flat, blunt object, approximately 1/8 inch (3.17 mm) wide; on to the polarizing grove and the other at a point of 180 degrees from the polarizing grove in the vicinity of the mating edge (see figure 4).
c. The connectors shall meet the requirements of 3.6.11.

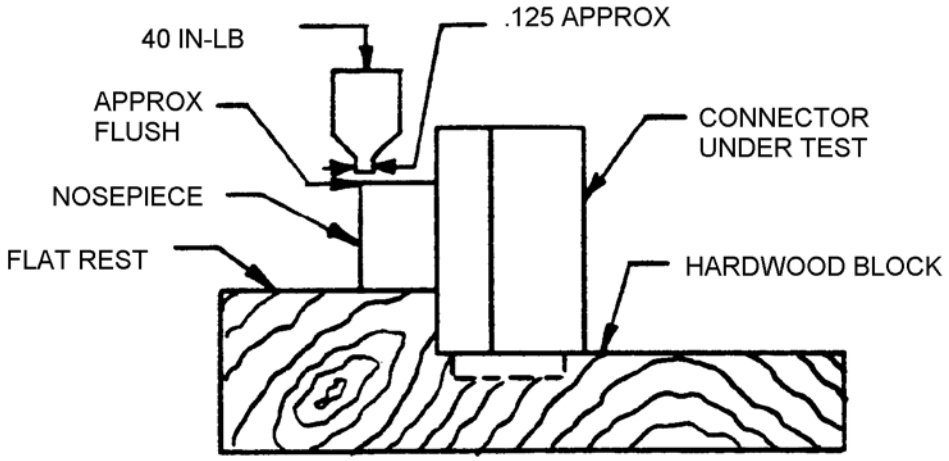

FIGURE 4. Impact resistance of nose piece test set-up.

4.9.14 Vibration (see 3.6.12). Mated connectors shall be tested in accordance with EIA-364-28, test condition I. The following details shall apply:

a. Method of mounting. Receptacles shall be rigidly installed on a bracket by means or the receptacle mounting flange and nut. Plugs shall be fully mated to an appropriate mating receptacle.
b. Duration and direction of motion: Two hours in each of three mutually perpendicular directions. One direction shall be with the contact axis in a horizontal plane.
c. Tests and measurements after vibration: The connectors shall meet the requirements of 3.6.12.

4.9.15 Salt spray (corrosion) (unmated) (see 3.6.13). Connectors shall be tested in accordance with EIA/ECA-364-26. The following details shall apply:

a. Test condition: B.
b. The samples shall not be mounted, but shall be suspended using wax twine (or string), glass rods, or glass cord.
c. The connectors shall meet the requirements of 3.6.13.

4.9.16 Immersion (see 3.6.14). The following conditions shall apply:

a. After being prepared for test as indicated in 4.6, the connectors shall be immersed in tap water or deionized water to a depth of 6 feet (1.83 meters) for a period of 48 hours.
b. Fifty percent of the connectors tested shall be mated and 50 percent shall be unmated.
c. Following the test, the connectors shall meet the requirements of 3.6.14.

4.9.17 Bounce (see 3.6.15). The connectors shall be tested on Package Tester. Examples of package testing tables meeting these requirements include model Type 1000SC or 100V, as made by the L. A. B. Equipment, Inc., or equivalent. Accessories shall be selected from those listed on drawing SC-A-46439. The following details apply:

a. Cover the tester bed with a panel of 1/2 inch (12.70 mm) plywood, with the grain parallel to the drive chain. Space sixpenny nails with heads below the surface, at 6 inch (152 mm) around all four edges at 3 inch (76 mm) intervals in a 6 inch (152 mm) square in the center.
b. Place the mated connectors on the bed of the package tester. Limit the lateral motion by wooden fences, to not more than 3 inches (76 mm) and not less than 1 inch (25.4 mm).
c. Operate the package tester, shafts in phase, for a total of 3 hours at 284 $\pm$ 2 rpm.
d. Following the above, the connector shall meet the requirements of 3.6.15.

4.9.18 Drop (see 3.6.16). The connectors shall be dropped at random six times from a height of 6 feet (1.83 m) onto a 2 inch (50.80 mm) wood floor or barrier backed by a concrete or rigid steel frame. The connectors shall meet the requirements of 3.6.16.

4.9.19 Compression (see 3.6.17). The shell body of the connector plug shall be subjected to a force of 500 pounds (227 kg) applied as shown on figure 5. The connectors shall meet the requirements of 3.6.17.

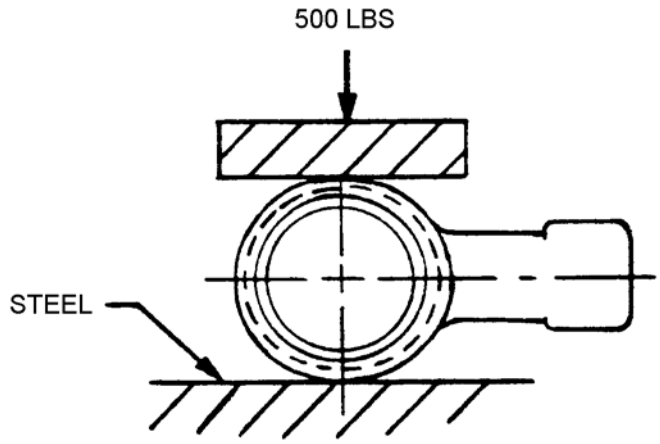

FIGURE 5. Compression test of shell.

4.9.20 Impact resistance of shell body (see 3.6.18). The shell body of the connector plug shall be subjected to a force of 180 inch-pounds (20.3 Nm) applied as shown on figure 6. The connectors shall meet the requirements of 3.6.18.

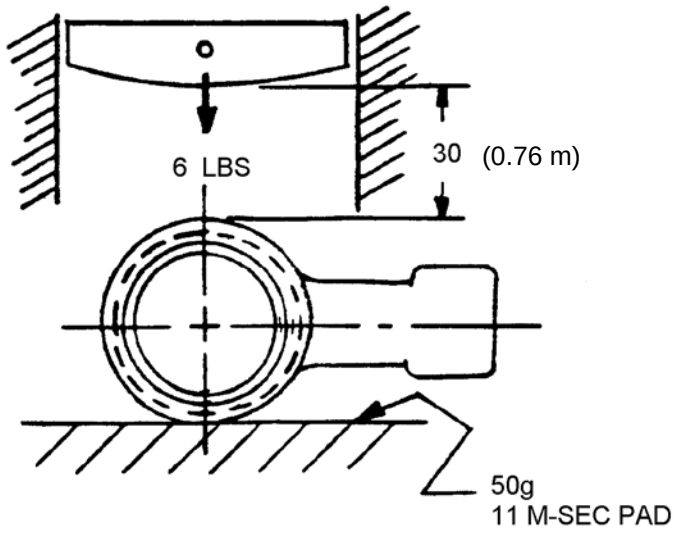

FIGURE 6. Impact resistance of shell body test set up.

4.9.21 Verification of contact plating thickness. Verification of nickel under plating and gold finish plating thickness shall be in accordance with ASTM B567, ASTM B568, ASTM B487 or ASTM B748, or an equivalent industry recognized standard. When the connector manufacturer does not manufacture the contacts himself, but instead procures contacts from another source, the connector manufacturer shall obtain written documentation from the contact source that the requirements of this specification are met, and shall include such documentation with test data presented to the qualification activity for initial qualification and Group C testing.

4.9.21.1 Plating process or procedure changes. Any changes to the plating process or procedures subsequent to qualification or the latest verification that could affect the quality or thickness of the under plate or finish plating shall be reported to DLA Land and Maritime-VQP. Any such changes may require re-verification of contact plating to retain qualification. Responsibility for ensuring that plating requirements are met rests with the connector manufacturer.

4.9.21.2 Sample size. A minimum of 10 contacts for each type of contact to be used in qualified connectors shall be tested for initial qualification, or 5 contacts for each type of contact to be used in qualified connectors shall be tested for Group C testing. Contacts may be removed from assembled connectors, or, if loose contacts are tested, they must be representative of contacts used in assembly of the finished connectors. All individual test points shall meet the plating requirements of this specification.

4.9.21.3 Visual inspection. Visually inspect all contacts for any signs of damage or other abnormalities.

4.9.21.4 Plating thickness measurement points.

4.9.21.4.1 Pin contacts. A minimum of 5 straight line points shall be measured on the contact mating surface. The contact may be rotated, but measurement points shall be progressively further from the last point. Measurements shall be as follows:

(1) 1 measurement shall be taken at a point on the front radius.
(2) 3 measurements shall be taken in the middle areas.
(3) 1 measurement shall be taken at the end of the contact mating surface.

4.9.21.4.2 Socket contacts. A minimum of 3 straight line points shall be measured on the contact mating surface. Socket contact may be rotated, but measurement points shall be progressively further from the last point.

4.9.21.4.3 Termination ends. A minimum of 2 straight line points on the termination surface (solder areas) shall be measured. Termination end may be rotated, but measurement points shall be progressively further from the last point.

5. PACKAGING

5.1 Packaging. For acquisition purposes, the packaging requirements shall be as specified in the contract or order (see 6.2). When packaging of materiel is to be performed by DoD or in-house contractor personnel, these personnel need to contact the responsible packaging activity to ascertain packaging requirements. Packaging requirements are maintained by the Inventory Control Point's packaging activities within the Military Service or Defense Agency, or within the Military Service's service commands. Packaging data retrieval is available from the managing Military Department's or Defense Agency's automated package files, CD-ROM products, or by contacting the responsible packaging activity.

6. NOTES

(This section contains information of a general or explanatory nature that may be helpful, but is not mandatory.)

6.1 Intended use. The electrical connectors covered by this specification are used primarily for portable and vehicular mounted equipment.

6.1.1 Military unique rationale. The connectors covered by this specification are military unique because they must be able to function after 500 hours of salt spray, operate at -55° to +200° C, and withstand barometric pressure drops from 50,000 feet (15.24 km) to sea level. Commercial electronic connectors are not designed to withstand such extreme and sudden environmental conditions and would experience catastrophic failure.

6.2 Acquisition requirements. Acquisition documents must specify the following:

a. Title, number and date of the specification.
b. Title, number and date of the applicable specification sheet, and the complete PIN (see 1.2.1 and 3.1).
c. Certificate of compliance covering materials, when required.

6.3 Qualification. With respect to products requiring qualification, awards will be made only for products which are, at the time of award of contract, qualified for inclusion in Qualified Products List (QPL) No. 55181 whether or not such products have actually been so listed by that date. The attention of the contractors is called to these requirements, and manufacturers are urged to arrange to have the products that they propose to offer to the Federal Government tested for qualification in order that they may be eligible to be awarded contracts or orders for the products covered by this specification. Information pertaining to qualification of products may be obtained from DLA Land and Maritime - VQP, P.O. Box 3990, Columbus, Ohio 43218-5000. An online listing of products qualified to this specification may be found in the Qualified Products Database (QPD) at https://assist.dla.mil.

Note: Application for qualification testing will be conducted in accordance with “Provisions Governing Qualification” (see 6.3.1).

6.3.1 Provisions governing qualification. Copies of “Provisions Governing Qualification” may be obtained upon application to Standardization Document Order Desk, Building 4D, 700 Robbins Avenue, Philadelphia, PA 19111-5094.

6.4 Tin whisker growth. The use of alloys with tin content greater than 97 percent, by mass, may exhibit tin whisker growth problems after manufacture. Tin whiskers may occur anytime from a day to years after manufacture and can develop under typical operating conditions, on products that use such materials. Conformal coatings applied over top of a whisker-prone surface will not prevent the formation of tin whiskers. Alloys of 3 percent lead, by mass, have shown to inhibit the growth of tin whiskers. For additional information on this matter, refer to ASTM B545 (Standard Specification for Electrodeposited Coatings of Tin) (see 3.3.3.2).

6.5 Cross-reference.

6.5.1 Previous designator. The previous connector designator was in the following format.

MW	10	M	(M)	A	11
Connector type (6.4.1.1)	Shell type (6.4.1.2)	Insert type (6.4.1.3)	Contact type (6.4.1.4)	Insert arrangement (6.4.1.5)	Cable size accommodation (6.4.1.6)

6.5.1.1 Connector type. Connectors covered by this specification were identified by two letter symbols "MW".

6.5.1.2 Shell type. The shell type was identified by a two digit number; plugs by the number "10" and receptacles by the number "20".

6.5.1.3 Insert type. The insert type was identified by a single letter; male contacts by the letter "M" and female contacts by the letter "F".

6.5.1.4 Contact type. The contact type was identified by a single letter in parenthesis; molded contacts by "M".

6.5.1.5 Insert arrangements. The insert arrangements were identified by a single letter as specified in table IX.

TABLE IX. Insert characteristics.

Insert arrangement	Number of contacts	Contact size (AWG)	Current rating (amps)
A	4	12	35
B	9	20	7.5
D	18	20	7.5

6.5.1.6 Cable size accommodation. The cable size accommodation was identified by a two-digit number as specified in table X. This number indicated the maximum outside diameter of the cable.

TABLE X. Cable size accommodation.

Symbol	Minimum (mm)	Maximum (mm)
00	Not applicable	Not applicable
11	.292 (7.41)	.343 (8.71)
13	.323 (8.20)	.406 (10.31)
15	.386 (9.80)	.468 (11.88)
17	.448 (11.38)	.531 (13.48)
19	.511 (12.98)	.593 (15.06)

6.6 Environmentally preferable material. Environmentally preferable materials should be used to the maximum extent possible to meet the requirements of this specification. As of the dating of this document, the U.S. Environmental Protection Agency (EPA) is focusing efforts on reducing 31 priority chemicals. The list of chemicals and additional information is available on their website at http://www.epa.gov/osw/hazard/wastemin/priority.htm. Included in the EPA list of 31 priority chemicals are cadmium, lead and mercury. Use of these materials should be minimized or eliminated unless needed to meet the requirements specified herein (see Section 3).

6.7 Subject term (key word) listing.

Beryllium
Center coupling
Copper
Lead
Nickel
Wing blade

6.8 Changes from previous issue. Marginal notations are not used in this revision to identify changes with respect to the previous issue due to the extent of the changes.

CONCLUDING MATERIAL

Custodians:
Army - CR
Navy - EC
Air Force – 85
DLA - CC

Review activity:
Air Force - 99

Preparing activity
DLA - CC

(Project 5935-2012-004)

NOTE: The activities listed above were interested in this document as of the date of this document. Since organizations and responsibilities can change, you should verify the currency of the information above using the ASSIST Online database at https://assist.dla.mil.