INCH-POUND

MIL-DTL-55116D
w/AMENDMENT 2
22 December 2015
SUPERSEDING
MIL-DTL-55116D
w/AMENDMENT 1
02 October 2015

DETAIL SPECIFICATION

CONNECTORS: MINIATURE AUDIO, FIVE-PIN AND SIX-PIN GENERAL SPECIFICATION FOR

This specification is approved for use by all Departments and Agencies of the Department of Defense.

1. SCOPE

1.1 Scope. This specification covers waterproof, polarized, five and six contact electrical connectors (plugs and receptacles) for use in audio frequency circuits at 60 volts maximum potential and 0.5 amperes maximum current.

1.2 Designated types. The following connectors are covered by this specification.

1.2.1 Plug connectors. Connector plugs U-228( )/U and U-229( )/U are field serviceable and replace the unserviceable molded boot type connector plugs U-181( )/U and U-182( )/U.

U-182( )/U (Rigid contacts; mates with U-228( )/U, U-183( )/U)
U-228( )/U (Non-rigid contacts; mates with U-229( )/U, U-182( )/U)
U-229( )/U (Rigid contact; mates with U-228( )/U and U-183( )/U)

1.2.2 Receptacle connectors.

U-183( )/U (Non-rigid contacts; mates with U-229( )/U)

1.3 Cable size accommodation. The cable size accommodation is identified by a dash number in accordance with table I. This number indicates the outside diameter of the cable that the connector will accommodate.

TABLE I. Cable accommodation.

Dash no.	Cable diameter
-0	N/A
-1	.165 ± .010
-2	.228 ± .010

Dash no.	Cable diameter
-3	.250 ± .010
-4	.290 ± .010
-5	.320 ± .010

Comments, suggestions, or questions on this document should be addressed to DLA Land and Maritime, Columbus, ATTN: VAI, Post Office Box 3990, Columbus, OH 43216-5000, or emailed to RFConnector@DLA Land and Maritime.dla.mil. Since contact information can change, you may want to verify the currency of this address information using the ASSIST Online database at https://assist.dla.mil.

AMSC N/A FSC 5935

1.4 Part or Identifying Number (PIN). The connector PIN will be designated in the following manner:

M55116/XX-X

The letter "M" followed by the basic specification number.

Specification sheet number.

Cable size designator (0 thru 5) in accordance with table I.

2. APPLICABLE DOCUMENTS

2.1 General. The documents listed in this section are specified in section 3 and 4 of this specification. This section does not include documents cited in other sections of this specification or recommended for additional information or as examples. While every effort has been made to ensure the completeness of this list, document users are cautioned that they must meet all specified requirements of documents cited in 3 and 4 of this specification, whether or not they are listed.

2.2 Government documents.

2.2.1 Specifications, standards, and handbook. The following specifications, standards, and handbooks form a part of this document to the extent specified herein. Unless otherwise specified, the issues of these documents are those cited in the solicitation or contract (see 6.2).

FEDERAL SPECIFICATIONS

FED-STD-H28	-	Screw-Thread Standards for Federal Services
L-P-410	-	Plastic, Polyamide (nylon), Rigid: Rods, Tubes, Flats, Molded and Cast Parts

DEPARTMENT OF DEFENSE SPECIFICATIONS

MIL-PRF-28800	-	Test Equipment for use with Electrical and Electronic Equipment, General Specification
MIL-DTL-13924	-	Coating, Oxide, Black, for Ferrous Metals
MIL-DTL-14072	-	Finishes for Ground Signal Equipment.

DEPARTMENT OF DEFENSE STANDARDS

MIL-STD-202-101	-	Test Method Standard, Method 101, Salt Atmosphere (corrosion)
MIL-STD-202-107	-	Test Method Standard, Method 107, Thermal Shock
MIL-STD-202-201	-	Test Method Standard, Method 201, Vibration
MIL-STD-889	-	Dissimilar Metals
MIL-STD-13231	-	Marking of Electronic Items

(See supplement 1 for list of specification sheets.)

(Copies of these documents are available online at http://quicksearch.dla.mil/.

2.3 Non-Government publications. The following documents form a part of this document to the extent specified herein. Unless otherwise specified, the issues of these documents are those cited in the solicitation or contract (see 6.2).

AMERICAN SOCIETY OF AUTOMOTIVE ENGINEERS (SAE)

SAE AMS 5639	-	Steel, Corrosion-Resistant, Bars, Wire, Forgings, Tubing, and Rings
SAE AMS-QQ-N-290	-	Nickel Plating (Electrodeposited)
SAE AMS-QQ-S-763	-	Steel, Corrosion Resistant, Bars, Wire, Shapes, and Forgings
SAE AMS2700	-	Passivation Treatment for Corrosion-Resistant Steel

(Copies of these documents are available online at http://www.sae.org.)

ASTM INTERNATIONAL

ASTM A313/A313M	-	Chromium-Nickel Stainless and Heat-Resisting Steel Wire
ASTM A582/A582M	-	Free Machining Stainless and Heat-Resisting Steel Wire
ASTM B16/B16M	-	Rod, Brass, Free-cutting, Bar and Shapes for Use in Screw Machines
ASTM B194	-	Copper Beryllium Alloy Plate, Sheet, Strip and Bar
ASTM B196/B196M	-	Rod and Bar, Copper-Beryllium Alloy
ASTM B197/B197M	-	Wire, Alloy Copper-Beryllium
ASTM B488	-	Electrodeposited Coatings of Gold for Engineering Uses
ASTM D2000	-	Standard Classification System for Rubber Products in Automotive Applications
ASTM D5948	-	Compounds, Molding, Thermosetting
ASTM D6779	-	Nylon Injection and Extrusion Materials (PA), Standard Classification Systems for

(Copies of these documents are available online at http://www.astm.org.)

ELECTRONIC INDUSTRIES ALLIANCE (EIA)

ECA/EIA-364-31	-	Humidity Test Procedure for Electrical Connectors and Sockets

(Copies of these documents are available online at http://www.eia.org.)

INTERNATIONAL ORGANIZATION FOR STANDARDIZATION (ISO)

ISO 10012	-	Measurement Management Systems - Requirements for Measurement Processes and Measuring Equipment

(Copies of these documents are available online at http://www.ansi.org).

2.4 Order of precedence. Unless otherwise noted herein or in the contract, in the event of a conflict between the text of this document and the references cited herein (except for related specification sheets), the text of this document takes precedence. Nothing in this document, however, supersedes applicable laws and regulations unless a specific exemption has been obtained.

3. REQUIREMENTS

3.1 Specification sheets. The individual item requirements shall be as specified herein and in accordance with the applicable specification sheets. In the event of any conflict between the requirements of this specification and the specification sheets, the latter shall govern.

3.2 Qualification. Connectors furnished under this specification shall be products that are authorized by the qualifying activity for listing on the applicable qualified products list before contract award (see 4.5 and 6.3).

3.3 Materials. The material for each part shall be as specified herein. However, when a definite material is not specified, a material shall be used which will enable the connector to meet the performance requirements of this specification.

3.3.1 Plastics.

3.3.1.1 Inserts. Insert material shall be in accordance with ASTM D5948, diallylphthalate resin type SDG-F or GDI-30F, or MDG.

3.3.1.2 Loading sleeve. Material shall be nylon 6/6, white or natural, in accordance with specification L-P-410.

3.3.2 Rubber. Rubber material shall be in accordance with ASTM D2000. Composition and hardness shall be such that the fabricated parts, when assembled with other parts into a finished connector, will meet the requirements of this specification.

3.3.3 Metals. Metals used to fabricate connectors covered by this specification may be aluminum, aluminum alloy, brass, steel, or corrosion resistant steel. Where dissimilar metals are used in intimate contact with each other, protection against electrolysis and corrosion shall be provided. Dissimilar metals shall be in accordance with MIL-STD-889. Dissimilar metals such as brass, copper or steel, except corrosion-resisting steel passivated in accordance with SAE AMS2700, shall not be used in intimate contact with aluminum or aluminum alloy.

3.3.3.1 Contacts. All contacts shall be brass, UNS no. C36000, temper H02, in accordance with ASTM B16/B16M. Finish shall be gold plate in accordance with ASTM B488, type I, code C, class 0.75 (.000030) over nickel in accordance with SAE AMS-QQ-N-290, minimum thickness .0001 inch. Copper underplate is optional before nickel. If used, copper underplate must be .0002 inch minimum. Contacts are to be washed in hot water only to remove salts. Do not burnish, tumble, or coat in any manner that may interfere with cements used for bonding contact into plastic.

Spring elements of the spring loaded contacts shall be beryllium copper, C17200 and C17300, temper TH04, in accordance with ASTM B197/B197M, ASTM B196/B196M, or ASTM B194. The finish shall be silver plate, M351, in accordance with MIL-DTL-14072 or gold plate over silver in accordance with ASTM B488, type I, code C, class 0.75 (.000030).

3.3.3.2 Connector shell. The connector shell may be fabricated entirely of stainless steel or with a stainless steel liner covered with plastic. The stainless steel shall be in accordance with SAE AMS 5639, or type 304 condition B, hardened in accordance with SAE AMS-QQ-S-763, or type 303 condition A, cold rolled annealed in accordance with ASTM A582/A582. The plastic covering shall be black, glass filled nylon 6, 6/10 or 6/12 type in accordance with ASTM D6779.

3.3.3.2.1 Connector locking pins. The three connector locking pins required in female type connectors shall be hardened stainless steel, type 304, condition B in accordance with SAE AMS-QQ-S-763, or heat treated stainless steel, type 416, condition H, in accordance with ASTM A582/A582. The pins shall each have a diameter of 0.044 ± .001 inch on the exposed surface. The base circle diameter of the 3 pins shall be .557 ± .002 inch.

3.3.3.3 Bend relief spring. The bend relief spring shall be fabricated using steel, corrosion-resisting wire, form I, condition B, composition 302, in accordance with ASTM A313/A313M. Finish with chemical blackening process, class 3 or class 4, in accordance with MIL-DTL-13924.

3.3.3.4 Finish protective. Finish on the exposed surfaces of aluminum or aluminum alloy parts shall be dyed black finish E-511 in accordance with MIL-DTL-14072. Stainless steel shall be light sand blast, finish type E300 in accordance with MIL-DTL-14072.

3.3.3.5 Tinsel cord. Tinsel cord shall be in accordance with figure 2.

3.4 Design and construction. Connectors shall be of the design, construction, and physical dimensions specified (see 3.1).

3.4.1 Threaded parts. Unless otherwise specified (see 3.1), all threaded parts shall be in accordance with FED-STD-H28.

3.4.2 Casting and molded parts.

3.4.2.1 Casting. Castings shall be of uniform quality and conditions, and free from harmful cracks, shrinkage, porosity, gas holes, foreign matter and other injurious defects. The surface of the castings shall be free from pits, parting lines, porous areas, fins, ridges, modules, raised metal and scale. All castings shall be completely cleaned prior to presentation for inspection. Castings shall not be plugged or welded, nor shall imperfections be filled in.

3.4.2.2 Molded parts. Molded parts shall be uniform in quality, condition and color. The molded parts shall be clean, smooth, free from porous areas, foreign materials, weak sections, bubbles, flash and any other injurious defects.

3.4.3 Cleaning.

3.4.3.1 Parts. After fabrication, parts shall be cleaned in accordance with good commercial practice, or as specified in an applicable document. Cleaning processes shall have no deleterious effect. Corrosive material shall be removed completely before the parts are assembled.

3.4.3.2 Connectors. After assembly, connectors shall be cleaned and shall be free from foreign material.

3.4.4 Alignment dot. Alignment dot(s) shall be a depression filled with orange epoxy paint.

3.5 Electrical.

3.5.1 Dielectric withstanding voltage. There shall be no arcing or dielectric breakdown when the connectors are tested in accordance with 4.7.1.

3.5.2 Insulation resistance. When tested in accordance with 4.7.2, the insulation shall be not less than 1,000 megohm, except for unmated connectors following the immersion test, when it shall not be less than 100 megohms.

3.5.3 Contact resistance. The electrical resistance of each non-rigid contact shall be such that the terminal-to-terminal resistance of mated connector contacts shall not exceed 0.050 ohm (see 4.7.3).

3.6 Mechanical requirements.

3.6.1 Contact depression. The force required to depress the contacts of connectors with non-rigid contacts to the distance specified in 4.8.1 shall not exceed 1.75 lbs. or be less than 1.25 lbs. per individual contact. For 5 contacts, total contact depression force shall not exceed 8.75 lbs. or be less than 6.25 lbs. For 6 contacts, total depression force shall not exceed 10.5 lbs. or be less than 7.5 lbs. (see 4.8.1).

3.6.2 Air pressure. Connectors shall show no evidence of leakage through the connector when tested in accordance with 4.8.2.

3.6.3 Mating action. After 3000 matings, in accordance with 4.8.3, connectors shall show no mechanical damage, and the dielectric, contact resistance, and air pressure, in accordance with 3.5.1, 3.5.3 and 3.6.2 respectively, shall be met.

3.6.4 Contact retention. The individual contacts shall be capable of withstanding an axial load of at least 10 pounds when tested in accordance with 4.8.4.

3.6.5 Interchangeability. When tested in accordance with 4.8.5, like units, assemblies, and subassemblies shall be physically and functionally interchangeable without modification of such items or of the connector. Individual items shall not be handpicked for fit. Reliance shall not be placed on any unspecified dimension, characteristics, etc.

3.6.6 Compression. When plugs are tested in accordance with 4.8.6, there shall be no evidence of distortion or damage to the plugs that would affect form, fit, or function.

3.6.7 Pull test. When mated and tested in accordance with 4.8.7, connectors shall withstand an axial pull of not less than 40 lbs applied to the shell, and 25 lbs applied to the cable. In each instance the weight is to be applied abruptly.

3.7 Service conditions.

3.7.1 Bounce. After being tested in accordance with 4.9.1, the connectors shall show no evidence of cracking, breaking or loosening of parts. Following the test, the connectors shall then meet the electrical requirements of 3.5, air leakage requirement of 3.6.2, and interchangeability 3.6.5.

3.7.2 Vibration. When mated connectors are tested in accordance with 4.9.2, there shall be no evidence of cracking, breaking, or loosening of parts, and the plug shall not become disengaged from the receptacle. Following the test, the connectors shall meet the electrical requirements of 3.5 and the air leakage requirement of 3.6.2.

3.7.3 Drop. Connectors subjected to the test in accordance with 4.9.3 shall show no physical damage which would affect mateability nor shall there be any loose parts. Following the test, the connectors shall then meet the electrical requirements of 3.5 and the air leakage requirement of 3.6.2.

3.7.4 Temperature cycling. During the fifth cycle of the test in accordance with 4.9.4, the connectors shall be capable of being mated and unmated. Following the test, the connectors shall meet the electrical requirements of 3.5 and air leakage requirements of 3.6.2.

3.7.5 Salt spray. After unmated connectors are tested in accordance with 4.9.5, there shall be no evidence of base metal corrosion.

3.7.6 Humidity. Mated and unmated connectors shall be subjected to the test in accordance with 4.9.6. Following the test, the connectors shall meet the electrical requirements of 3.5 and the air leakage requirement of 3.6.2.

3.7.7 Water immersion. There shall be no evidence of leakage into the body of unmated connectors or into the body or contact-face area of mated connectors when tested in accordance with 4.9.7.

3.8 Marking. Marking shall conform to MIL-STD-13231.

3.9 Identification of contacts. All contacts shall be identified by letters, either raised or depressed, on the front and on the rear surface of each male and female insert. Lettering shall be as specified on the individual specification sheets.

3.10 Workmanship. Connectors and accessories shall be processed in such a manner as to be uniform in quality, and shall be free from burrs, crazing, cracks, voids, pimples, chips, blisters, pinholes, sharp cutting edges, and other defects as listed in 4.10, that will adversely affect life, serviceability, or appearance. The connectors shall comply with the requirements of 3.3, 3.4, 3.8, and 3.9.

3.11 Safety requirements.

3.11.1 Personnel hazards. MIL-PRF-28800 safety requirements are applicable. Verification of compliance with this requirement shall be via visual inspection (see 4.11).

3.11.2 Edge rounding exposed. Exposed edges and corners shall be rounded sufficiently to minimize laceration/puncture hazards. The design goal being a minimum radius of 0.04 inch (1 mm) for edges, and 0.5 inch (12.7 mm) minimum for corners.

3.12 Recycled, recovered, or environmentally preferable materials. Recycled, recovered, or environmentally preferable materials should be used to the maximum extent possible, provided that the material meets or exceeds the operational and maintenance requirements and promotes economically advantageous life cycle costs.

4. VERIFICATION

4.1 Classification of inspections. The inspections specified herein are classified as follows:

a. Qualification inspection (see 4.5).
b. Conformance inspection (see 4.6).
c. Materials inspection (see 4.3).

4.2 Test equipment and inspection facilities. Test and measuring equipment and inspection facilities of sufficient accuracy, quality, and quantity to permit performance of the required inspection shall be established and maintained by the contractor. The establishment and maintenance of a calibration system to control the accuracy of the measuring and test equipment shall be in accordance with ISO 10012, or equivalent. This requirement also applies to automatic test equipment.

4.2.1 Automatic testing. The inspection for insulation resistance and dielectric withstanding voltage may be performed by automatic means, except during qualification testing. Insulation resistance and dielectric withstanding voltage may be performed simultaneously in less than one minute provided that the current flow in the circuit is zero before automatically proceeding to the next step. In addition, the automatic test equipment shall be manually reset when failure occurs.

4.2.2 Test conditions.

4.2.2.1 Test fixture. A connector test sample can be mated with a test fixture unit to perform electrical testing, provided all applicable test conditions are maintained.

4.2.2.2 Preconditioning. The contractor shall be permitted to precondition the connector samples prior to performing any electrical tests. The preconditioning shall consist of removing surface moisture from the connectors by wiping, drying, blowing, or heating. The application of heat shall be limited to 3 minutes. For unmated connectors to be subjected to immersion and humidity test, a 24 hour waiting period in an ambient room temperature with a relative humidity of 50 $\pm$ 5% is permitted.

4.2.2.3 Preparation of samples for immersion and air pressure.

4.2.2.3.1 Connector, plug.

a. Unmated connector, the cable entry shall be sealed with a solid rubber plug having a length of approximately 6 inches and a diameter within +.005 of the minimum cable size given on table I.

b. Mated connector, the cable entry shall be installed in accordance with the test cable paragraph 4.9.8.1.

4.2.2.3.2 Connector receptacle. Connector receptacles shall be mounted using the normal mounting method so that only the front face is exposed to water.

4.3 Materials inspection. Materials inspection shall consist of certification supported by verifying data that the materials used in fabricating the connectors and accessories are in accordance with the applicable specifications or requirements prior to such fabrication.

4.4 Inspection conditions. Unless otherwise specified herein, all inspections shall be performed under the following ambient conditions: 15°C to 35°C, atmospheric pressure 550 to 800 mm Hg, 20 to 80 percent relative humidity.

4.5 Qualification inspection. Qualification inspection shall be performed at a laboratory acceptable to the Government (see 6.5) on sample units (see 3.1) produced with equipment and procedures normally used in production.

4.5.1 Samples. Nine (9) mated pairs of connectors from each specification sheet to be qualified shall be subjected to qualification inspection. Mated receptacles and plugs shall be in accordance with table II.

TABLE II. Mating plugs and receptacles

Plugs	Mating receptacles
MIL-DTL-55116/1	MIL-DTL-55116/9
MIL-DTL-55116/3	MIL-DTL-55116/11
MIL-DTL-55116/5	MIL-DTL-55116/13
MIL-DTL-55116/7	

Plugs	Mating receptacles
MIL-DTL-55116/2	MIL-DTL-55116/10
MIL-DTL-55116/4	MIL-DTL-55116/12
MIL-DTL-55116/6	MIL-DTL-55116/14
MIL-DTL-55116/8	

4.5.2 Inspection routine. Sample connectors shall be subjected to the inspection on table III.

4.5.3 Failures. One or more failures shall be cause for refusal to grant QPL approval.

4.5.4 Retention of qualification. To retain qualification, the contractor shall furnish the following reports to the qualifying activity at the time intervals specified:

a. 12 month intervals – A summary of the results of both group A and group B tests performed for inspection of product for delivery, indicating as a minimum the number of lots that have passed and the number that have failed. The results of tests of all reworked lots shall be identified and accounted for.

b. 24 to 36 months intervals – A summary of the results of group C tests performed for qualification inspection, including the number and mode of failures. The contractor shall forward the initial report at the end of 24 months; subsequent reporting periods will be 36 months. The qualifying activity shall establish the initial reporting date. If the summary of the test results indicated nonconformance with the specification requirements, and corrective action acceptable to the qualifying activity has not been taken, action may be taken to remove the failing product from the QPL.

Failure to submit the report within 30 days after the end of each 12-, 24- or 36-month period may result in loss of qualification for the product. In addition to the periodic submission of inspection data, the contractor shall immediately notify the qualifying activity at any time during the 12-, 24- or 36-month period that the inspection data indicates failure of the qualified product to meet the requirements of this specification.

In the event that no production occurred during the reporting period, a report shall be submitted certifying that the company still has the capabilities and facilities necessary to produce the item. If during two consecutive reporting periods there has been no production, the manufacturer may be required, at the discretion of the qualifying activity, to submit a representative product of each PIN for testing in accordance with the qualification inspection requirements.

4.6 Conformance inspection.

4.6.1 Responsibility for compliance. All items must meet all requirements of section 3. The absence of any inspection requirements in the specification shall not relieve the contractor of the responsibility of assuring that all products or supplies submitted to the Government for acceptance comply with all

requirements of the contract. Sampling in quality conformance does not authorize submission of known defective material, either indicated or actual, nor does it commit the Government to accept defective material. The government reserves the right to perform any of the inspections set forth in the specifications where such inspections are deemed necessary to assure the products supplied to this specification conform to prescribed requirements.

4.6.2 Inspection of product for delivery. Inspection of product for delivery shall consist of groups A, B and C.

4.6.2.1 Inspection lot. An inspection lot shall consist of all the connectors of the same PIN, produced under essentially the same conditions, and offered for inspection at one time.

4.6.2.2 Unit of product. The unit of product, for purposes of sampling, shall be each connector as specified in the contract or order.

4.6.2.3 Sample. The sample consist of one or more units of product drawn from a lot, the units of the sample being selected at random without regard to their quality. The number of units of product in the sample is the sample size.

4.6.2.4 Specimen. A specimen may be one unit of product or any portion of the unit of product which is to be subjected to inspection.

4.6.2.5 Rejected lots. If an inspection lot is rejected after group A or group B inspection, the lot shall not be supplied to the contract or purchase order. In cases where the defects are minor in nature, such as smudged marking, the contractor may contact the qualifying activity and may be allowed to screen the lot to remove defective parts or rework the lot. The qualifying activity can provide further guidance in such situations.

4.6.3 Group A inspection. Group A inspection shall consist of the inspections specified on table IV in the order shown.

4.6.3.1 Sampling plan (group A). A sample of parts shall be randomly selected from a production lot in accordance with table V. If one or more defects are found, the lot shall be rescreened and defects removed. After screening and removal of defects, a new sample of parts shall be randomly selected in accordance with table V. If one or more defects are found in the second sample, the lot shall be rejected and shall not be supplied to this specification.

TABLE III. Qualification inspection.

Inspection	Requirement paragraph	Test para.	1		2		3		4		5		6		7		8		9	
			P	R	P	R	P	R	P	R	P	R	P	R	P	R	P	R	P	R
Visual and mechanical	3.3, 3.4, 3.8, 3.9, 3.10	4.10	U	U	U	U	U	U	U	U	U	U	U	U	U	U	U	U	U	U
Dielectric withstanding voltage	3.5.1	4.7.1	U	U	U	U	U	U	U	U	U	U	U	U	U	U	U	U	U	U
Insulation resistance	3.5.2	4.7.2	U	U	U	U	U	U	U	U	U	U	U	U	U	U	U	U	U	U
Air pressure	3.6.2	4.8.2	U	U	U	U	U	U	U	U	U	U	U	U	U	U	U	U	U	U
Interchangeability	3.6.5	4.8.5	U	U	U	U	U	U	U	U	U	U	U	U	U	U	U	U	U	U
Contact resistance	3.5.3	4.7.3	M	M	M	M	M	M	M	M	M	M	M	M	M	M	M	M	M	M
Dielectric withstanding voltage (High altitude)	3.5.1	4.7.1.2	U	U	U	U	U	U	U	U	U	U	U	U	U	U	U	U	U	U
Humidity	3.7.6	4.9.6	U	U	M	M	–	–	–	–	–	–	–	–	–	–	–	–	–	–
Contact depression	3.6.1	4.8.1	–	U	–	U	–	U	–	U	–	U	–	U	–	U	–	U	–	U
Contact retention	3.6.4	4.8.4	U	U	U	U	U	U	–	–	–	–	–	–	–	–	–	–	–	–
Temperature cycling	3.7.4	4.9.4	M*	M*	U	U	U	U	–	–	–	–	–	–	–	–	–	–	–	–
Mating action	3.6.3	4.8.3	U	U	U	U	U	U	–	–	–	–	–	–	–	–	–	–	–	–
Pull test	3.6.7	4.8.7	–	–	–	–	–	–	M	–	M	–	M	–	–	–	–	–	–	–
Vibration	3.7.2	4.9.2	–	–	–	–	–	–	M	M	M	M	M	M	–	–	–	–	–	–
Salt spray	3.7.5	4.9.5	–	–	–	–	–	–	U	U	U	U	U	U	–	–	–	–	–	–
Immersion	3.7.7	4.9.7	–	–	–	–	–	–	–	–	–	–	–	–	M*	M*	U	U	U	U
Bounce	3.7.1	4.9.1	–	–	–	–	–	–	–	–	–	–	–	–	M	M	M	M	M	M
Drop	3.7.3	4.9.3	–	–	–	–	–	–	–	–	–	–	–	–	M	M	M	M	M	M
Compression	3.6.6	4.8.7													U	U	U	U	U	U

P = Plug U-229B, U-182 ( )/U.
R = Receptacle U - 183/U-228.
M = Mated plug and receptacle: Mated tests: U - 229B and U-182 shall be mated to U-183; U-228 shall be mated to U-229B.
U = Unmated.
M* = For purposes of qualification inspection the three samples shall be arranged as follows: one mated and two unmated.

TABLE IV. Group A inspection.

Inspection	Requirement paragraph	Test method paragraph	Sampling procedure
Visual and mechanical	3.3, 3.4, 3.8, 3.9, 3.10	4.10	See table V
Electrical			
Dielectric withstanding voltage	3.5.1	4.7.1	
Insulation resistance	3.5.2	4.7.2	
Air pressure	3.6.2	4.8.2	

TABLE V. Sample sizes for group A inspection.

Lot size	Visual and mechanical	Electrical	Air pressure
2 to 13	All	All	All
14 to 150	13	13	13
151 to 280	20	20	20
281 to 500	29	29	29
501 to 1,200	34	34	34
1,201 to 3,200	42	42	42
3,201 to 10,000	50	50	50
10,001 to 35,000	60	60	60
35,001 to 150,000	74	74	74
150,001 to 500,000	90	90	90
500,001 and over	102	102	102

4.6.4 Group B inspection. Group B inspection shall consist of the inspections in accordance with table VI in the order shown, and the sample shall be selected from inspection lots that have passed group A inspection.

4.6.4.1 Sampling plan (group B). A sample of parts shall be randomly selected from a production lot in accordance with table VII. If one or more defects are found, the lot shall be rescreened and defects removed. After screening and removal of defects, a new sample of parts shall be randomly selected in accordance with table VII. If one or more defects are found in the second sample, the lot shall be rejected and shall not be supplied to this specification.

4.6.4.2 Disposition of sample units. Sample units which have passed group A and B inspection are deliverable on the contact or order.

4.6.5 Group C inspection. Group C inspection shall consist of the inspections in accordance with table VIII in the order shown. Group C inspection shall be made on sample units selected from inspection lots which have passed the group A and B inspection.

4.6.5.1 Sampling plan. Sample units shall be subjected to the tests in accordance with table VIII every 12 months.

TABLE VI. Group B inspection.

Inspection	Requirement paragraph	Test method paragraph	Sampling procedure
Contact resistance	3.5.3	4.7.3	See table VII
Contact retention	3.6.4	4.8.4	
Interchangeability	3.6.5	4.8.5	
Contact depression	3.6.1	4.8.1	

TABLE VII. Sample sizes for group B inspection.

Lot size	Contact resistance	Contact retention	Interchangeability	Contact depression
2 to 3	All	All	All	All
4 to 13	3	3	all	3
14 to 25	3	3	13	3
26 to 50	5	5	13	5
51 to 90	6	6	13	6
91 to 150	7	7	13	7
151 to 280	10	10	20	10
281 to 500	11	11	29	11
501 to 1,200	15	15	34	15
1,201 to 3,200	18	18	42	18
3,201 to 10,000	22	22	50	22
10,001 to 35,000	29	29	60	29
35,001 to 150,000	29	29	74	29
150,001 to 500,000	29	29	90	29
500,001 and over	29	29	102	29

TABLE VIII. Group C inspection.

Inspection	Requirement paragraph	Test method paragraph	Number of sample units
Pull Test	3.6.7	4.8.7	2
Humidity	3.7.6	4.9.6	2
Mating Action	3.6.3	4.8.3	2
Temperature cycling	3.7.4	4.9.4	2
Vibration	3.7.2	4.9.2	2
Salt spray	3.7.5	4.9.5	2
Bounce	3.7.1	4.9.1	2
Drop	3.7.3	4.9.3	2
Water immersion	3.7.7	4.9.7	2
Compression	3.6.6	4.8.6	2

4.6.5.2 Failures. If one or more sample units fail to pass group C inspection, the sample shall be considered to have failed.

4.6.5.3 Disposition of sample units. Sample units which have been subjected to group C inspection shall not be deliverable on the contract.

4.7 Electrical tests.

4.7.1 Dielectric withstanding voltage.

4.7.1.1 At sea level. A potential of 500 volts rms shall be applied between each contact of the connector and the remaining contacts connected together and to the shell. The voltage shall be increased gradually from zero until the specified voltage is reached and shall be maintained at the value for approximately, but not less than, 1 minute. The specified voltage shall be reached within 5 seconds (see 3.5.1).

4.7.1.2 At high altitude. At a barometric pressure of 3.4 inches of mercury, a voltage of 300 V rms shall be applied as described in 4.7.1.1 and the connector shall meet the requirement specified in 3.5.1.

4.7.2 Insulation resistance. The insulation resistance shall be measured between each contact of the connector and the remaining contacts connected together and to the shell (see 3.5.2).

4.7.3 Contact resistance. The connector shall be mated with a test jig having non-rigid contact and the electrical resistance between mating contact terminals shall be measured with a Kelvin bridge, or other approved method (see 3.5.3).

4.8 Mechanical tests.

4.8.1 Contact depression. Two tests are required. First, a test plate shall be applied to non-rigid contacts of the U-228 and U-183 connectors in such a manner that the face of the contacts shall be depressed .080 inches from the normal plane of the face of the contact. The force required to accomplish this shall be recorded. Second, a test jig shall be used that will permit the depression of each individual contact. Each contact in turn shall be depressed .080 inches from the normal plane of the contact face and the depression force required shall be recorded. The forces required shall be in accordance with 3.6.1. At the conclusion of contact depression measurements, the contact resistance of each contact shall meet the requirements of 3.5.3.

4.8.2 Air pressure. To detect leakage, a pressure of 2.5 pounds per square inch shall be applied to the contact face and then to the rear of the plug or receptacle, using the differential leakage tester described on figure 1, or an equivalent method approved by the qualifying activity (see 3.6.2).

4.8.3 Mating action. The connector shall be mated and unmated 3000 times with the applicable mating connector at the rate of not more than 30 mating cycles per minute (see 4.9.8.1). The connector shall be examined for mechanical damage and then tested for contact resistance, air pressure, and dielectric in accordance with 4.7.3, 4.8.2 and 4.7.1 respectively, as applicable. Failure of any of these tests shall constitute failure of the mating action test. Failure of the sample connector due to failure of the applicable mating connector shall invalidate the test. The mating connector shall not be used for more than one mating action test (see 3.6.3).

4.8.4 Contact retention. An axial load shall be applied to the individual contacts of the sample connector with all contacts in place and the insert mounted in the shell. The load shall be applied uniformly at a rate of approximately one (1) pound per second. The load shall be applied first in one direction and then in the opposite direction, except for spring loaded contacts, where the load need be applied in one direction only, at the terminal end tending to push the contact inward. Contacts shall meet the requirements of 3.6.4.

4.8.5 Inspection for interchangeability. Connectors shall meet the physical interchangeability requirements of 3.6.5. Connectors may be gauged, using the gages specified in the applicable specification sheets, or the interchangeability requirement may be met by verifying the dimensions specified in the specification and detailed specification sheets.

4.8.6 Compression. The plugs shall be subject to a compression force of 500 pounds applied to its axis, and shall sustain no damage that will affect performance (see 3.6.6 and fig 3.)

4.8.7 Pull test. The receptacle and plug shall be mated. The receptacle shall be mounted rigidly in a vertical plane. A device such as a sling or harness shall be affixed to the plug which is below the receptacle. A dead weight of 40 pounds is placed on the device. Repeat this test by adding 25 pounds to a device secured to the cable. In each instance, the weight is abruptly placed on the device. At the completion of the test, the receptacle and plug shall unlock and lock without difficulty, and there shall be no visible damage (see 3.6.7).

4.9 Service conditions.

4.9.1 Bounce test. The connector shall be placed on a table of a device intended for Package Testing, and shall be constrained from a horizontal motion of more than 2 inches by suitable wooden frames. The table shall move with a circular-synchronous motion in a vertical plane with a 1-inch diameter orbital displacement wherein the table remains level and follows a circular path. The table shall operate at 284 ± 2 rpm for a total of 3 hours. Contact resistance, insulation resistance, dielectric withstanding voltage and air pressure tests shall follow (4.7.3, 4.7.2, 4.7.1, 4.8.2). There shall be no degradation in performance (see 3.7.1). Examples of Package Testing tables meeting these requirements are the Models SC1000 or 100V made by Lab Equipment, Inc. of Skaneateles, N.Y.

4.9.2 Vibration test.

4.9.2.1 U-183( )/U. Receptacle connector U-183 shall be mounted securely to a plate mounted on the vibration table. Corresponding mating plug U-229 shall be mated to it. The unit shall be tested in accordance with MIL-STD-202-201 (see 3.7.2).

4.9.2.2 U-228( )/U, U-229( )/U and U-182( )/U. Plug U-228( )/U, U-229( )/U, or U-182( )/U shall be securely mounted by metal straps to a plate mounted on the vibration table in such a manner that the mating plug U-229( )/U or receptacle U-183( )/U, when mounted with it, is not supported by any means other than the coupling device. The corresponding plug shall be mated with it and the coupling nut tightened finger tight (see 3.7.2). The unit shall be tested in accordance with MIL-STD-202-201 test condition A.

4.9.3 Drop. The connector shall be dropped six times at random from a height of six feet. The floor or barrier receiving the impact shall be 2 inch fir backed by a concrete or a rigid steel frame. Contact resistance, dielectric, and air pressure tests shall follow (4.7.3, 4.7.1, and 4.8.2). There shall be no degradation in performance (see 3.7.3).

4.9.4 Temperature cycling. The connectors with mating connectors shall be subjected to temperature cycling in accordance with MIL-STD-202-107 test condition A. Half of the connectors shall be mated and half shall be unmated when placed into each temperature condition. It shall be possible to mate and unmate the connectors at temperature extremes, and there shall be no loss of continuity (see 3.7.4).

4.9.5 Salt spray. The connectors shall be subjected to salt spray (corrosion) in accordance with MIL-STD-202-101, test condition B of (see 3.7.5).

4.9.6 Humidity. After being prepared for test in accordance with 4.2.2.3, 50 percent of the connectors shall be mated and 50 percent shall be unmated. The connectors shall be tested in accordance with method IV of ECA/EIA-364-31, except step 7a shall not be required. The connectors shall meet the requirements of 3.7.6.

NOTE: The connectors may be placed in the humidity chamber in such a manner as to preclude accumulation of moisture on the contact face.

4.9.7 Water immersion. Connector plugs U-228( )/U, U-229( )/U and U-182( )/U assembled to separate test cables and each other, or U-229( )/U with connector receptacle U-183( )/U, shall be immersed in tap water to a depth of 6 feet for a period of 48 hours in accordance with the following. The length of the cable shall be such that the cable extends a few feet outside of the tank (see 3.7.7)

a. The receptacles tested shall be completely sealed against leakage or shall be mounted by their normal means to the wall of the water tank so that the terminal end of the shell is external to the tank and the water in the tank does not leak through the junction of the receptacle and the tank.

b. Mated connectors – 50% of the connectors tested shall be mated. Insulation resistance of the still mated units shall be measured at the end of the test and shall meet the requirement of 3.5.2.

c. Unmated connector – 50% of the connectors tested shall remain unmated. Upon completion of the test, all excess moisture shall then be removed and the connector dried by room temperature compressed air for a period of 5 minutes. Insulation resistance shall be measured within ½ hour after test is performed and shall meet the requirement of 3.7.7. They shall then be examined for leakage into the body.

4.9.8 Mating test-connector. Test connectors necessary for the performance of tests requiring a mating connector shall be the applicable mate in accordance with 1.2. They shall have passed the visual and mechanical inspection of 4.10.

4.9.8.1 Test cables. For test purposes, plug connectors U-228( )/U, U-182( )/U and U-229( )/U will be equipped with length of cable not less than 7 feet.

4.10 Visual and mechanical inspection. Connectors shall be examined for the defects listed on table IX.

4.11 Visual and mechanical inspection for hazards. A visual inspection shall be performed to verify compliance with 3.11.

TABLE IX. Visual and mechanical defects.

Characteristic	Description of defect
Dimensions	Not as specified.
Materials and finish	Not as specified. Wrong or incomplete finish. Flaking, peeling, or chipping of finish. Scratches, cuts, abrasions, etc. causing exposure of base metal.
Parts	Missing parts. Inoperative, improperly assembled, or defective parts. Wrong parts. Any defective parts.
Marking	Marking missing, smudged or illegible, incorrect, incorrectly placed.
Contact identification	Contact identification, missing, illegal, or incorrect.
Foreign objects	No foreign objects should be on the device.

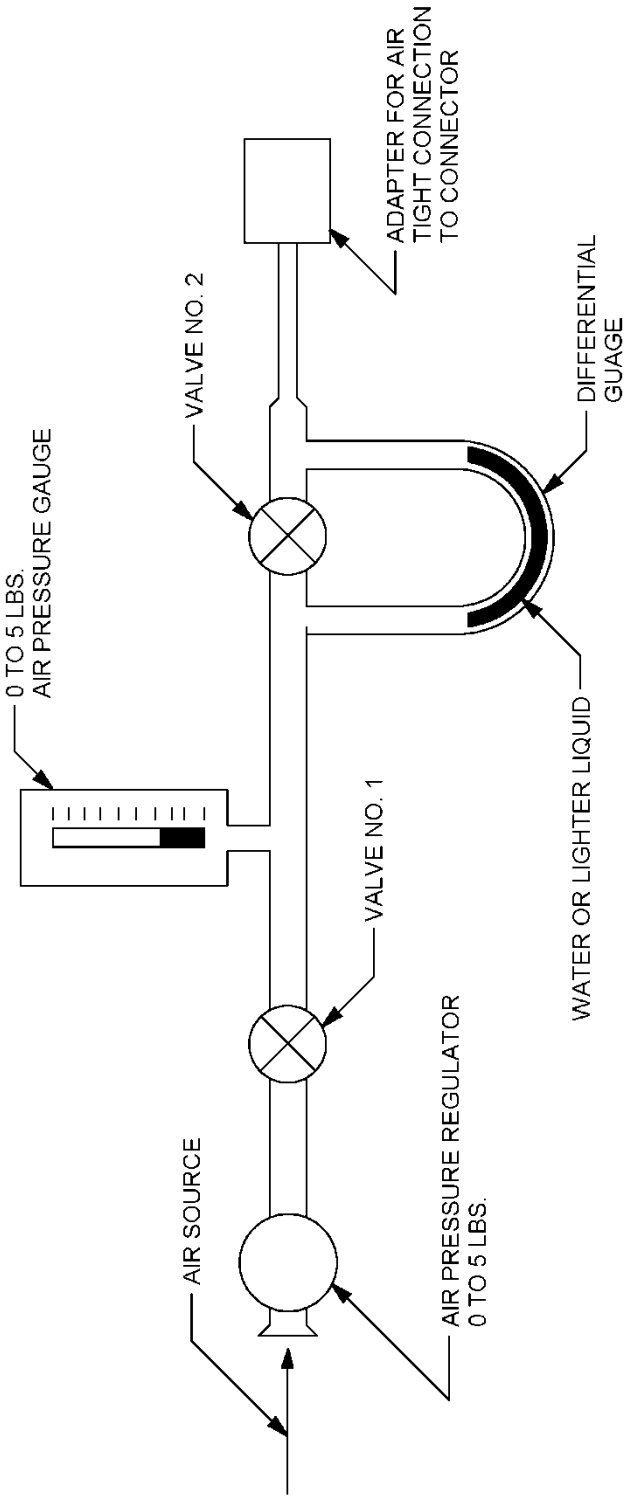

FIGURE 1. Diagram of air pressure test set up.

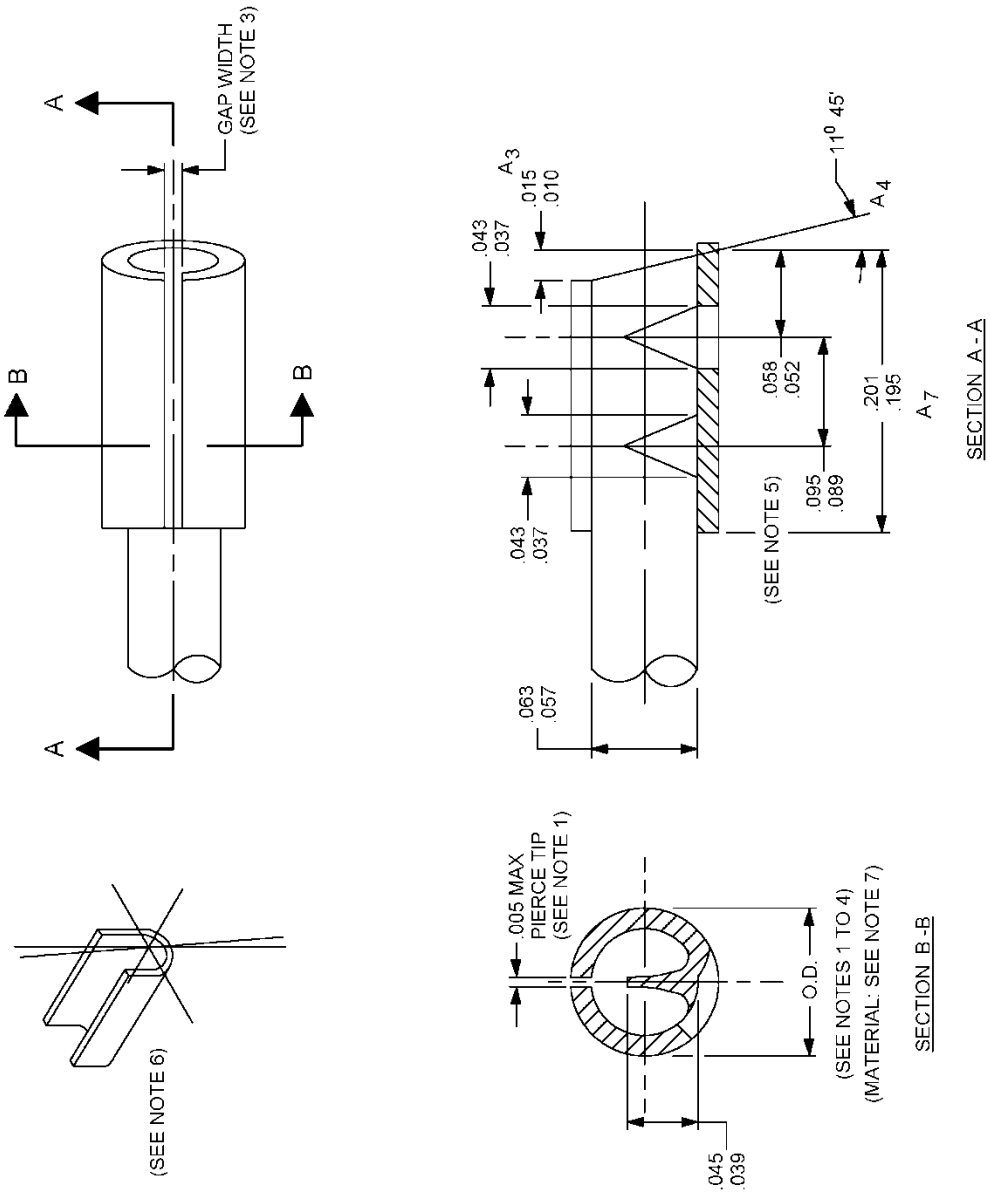

FIGURE 2. Diagram for termination of tinsel cord.

NOTES:

1. Two pierces to be coined so that cross section is tapered as shown.
2. O.D, of termination assembled to T-2049 tinsel cord to be force fit into .088/.086 ID.
3. Gap width to be adequate to allow insertion of termination assembled to cord into .088/.086 ID.
4. Scrap from cut off chaining link must extend no more than .020 from inclined front face.
5. External dimples or embosses or forming burr for retention of termination in contact may be located on this portion of periphery.
6. Termination to be formed into approx. “U” as shown above. Wire to be pushed down onto pierces and sides closed to form a cylinder.
7. Material to be quarterhard brass 0.011 inch thick; final plated with copper flash.
8. Dimensions are in inches. Metric equivalents are given for information only.

Inches	mm
.005	.127
.010	.254
.015	.381
.037	.9398
.043	1.0922
.045	1.143
.052	1.3208
.058	1.4732
.089	2.2606
.095	2.413
.195	4.953
.201	5.1054

FIGURE 2. Diagram for termination of tinsel cord - Continued.

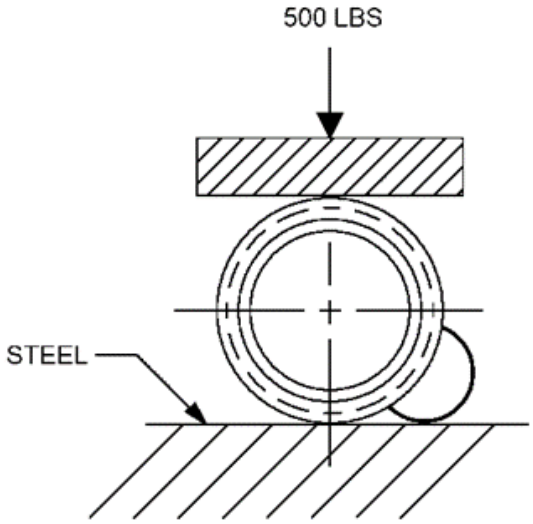

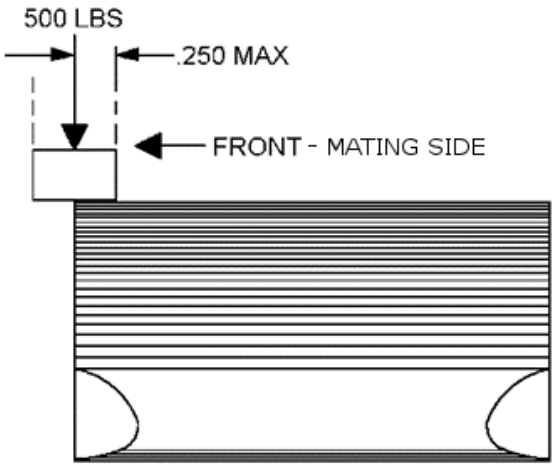

FIGURE 3. Compression test of shell.

5. PACKAGING

5.1 Packaging. For acquisition purposes, the packaging requirements shall be as specified in the contract or order (see 6.2). When packaging of materiel is to be performed by DoD or in-house contractor personnel, these personnel need to contact the responsible packaging activity to ascertain packaging requirements. Packaging requirements are maintained by the Inventory Control Point's packaging activities within the Military Service or Defense Agency, or within the Military Service's System Commands. Packaging data retrieval is available from the managing Military Department's or Defense Agency's automated packaging files, CD-ROM products, or by contacting the responsible packaging activity.

6. NOTES

(This section contains information of a general or explanatory nature which may be helpful, but is not mandatory.)

6.1 Intended use. The connectors are used in connection with audio frequency equipments, such as headsets, chestsets, handsets, etc.

6.2 Acquisition requirements. Acquisition documents should specify the following:

a. Title, number and date of this specification.
b. Type required.
c. For levels of preservation and packing requirements see section 5.
d. When first article inspection rough handling tests are not required.
e. Preproduction inspection: See 3.2 for number of samples.
f. Marking and shipping of samples.
g. Place of final inspection.
h. When first article packaging inspection reports require Acquisition Activity approval prior to production unit packing.
i. The specific issue of individual documents referenced.

6.3 Qualification. With respect to products requiring qualification, awards will be made only for products which are, at the time of award of contract, qualified for inclusion in Qualified Products List QPL No. 55116 whether or not such products have actually been so listed by that date. The attention of the contractors is called to these requirements, and manufacturers are urged to arrange to have the products that they propose to offer to the Federal Government tested for qualification in order that they may be eligible to be awarded contracts or orders for the products covered by this specification. Information pertaining to qualification of products may be obtained from Defense Supply Center Columbus, DSCC-VQ, 3990 East Broad Street, Columbus, Ohio 43218-3990. An online listing of products qualified to this specification may be found in the Qualified Products Database (QPD) at https://assist.dla.mil.

6.4 Verification inspection. Verification by the Government will be limited to the amount deemed necessary to determine compliance with the contract and will be limited in severity to the definitive quality assurance provisions established in this specification and the contract. The amount of verification inspection by the government will be adjusted to make maximum utilization of the contractor's quality control system and the quality history of the product.

6.5. Group C inspection. Approval to ship may be withheld, at the discretion of the Government, pending the decision from the contracting officer on the adequacy of corrective action (see 4.5.4).

6.6 Subject terms (key word) listing.

Plug, Electrical
Receptacle, Electrical
Waterproof

6.7 Environmentally preferable material. Environmentally preferable materials should be used to the maximum extent possible to meet the requirements of this specification. As of the dating of this document, the U.S. Environmental Protection Agency (EPA) is focusing efforts on reducing 31 priority chemicals. The list of chemicals and additional information is available on their website http://www.epa.gov/osw/hazard/wastemin/priority.htm. Included in the EPA list of 31 priority chemicals are cadmium, lead, and mercury. Use of these materials should be minimized or eliminated unless needed to meet the requirements specified herein (see Section 3).

6.8 Changes from previous issue. The margins of this specification are marked with vertical lines to indicate where changes from the previous issue were made. This was done as a convenience only and the Government assumes no liability whatsoever for any inaccuracies in these notations. Bidders and contractors are cautioned to evaluate the requirements of this document based on the entire content irrespective of the marginal notations and relationship to the last previous issue.

CONCLUDING MATERIAL

Custodians:
Army – CR
Air Force – 85
DLA - CC

Preparing activity:

DLA - CC

(Project 5935-2015-179)

Review activities:
Air Force – 99

NOTE: The activities listed above were interested in this document as of the date of this document. Since organization and responsibilities can change, you should verify the currency of the information above using the ASSIST Online database at https://assist.dla.mil.