INCH-POUND

MIL-DTL-55041F
5 January 2012
SUPERSEDING
MIL-DTL-55041E
15 August 2007

DETAIL SPECIFICATION

SWITCHES, WAVEGUIDE, GENERAL SPECIFICATION FOR

This specification is approved for use by all Departments and Agencies of the Department of Defense.

1. SCOPE

1.1 Scope. This specification covers the general requirements for waveguide switches, either manually or electromechanically operated, designed to connect and disconnect one or more waveguide sections to other waveguide sections. Detail requirements and specific characteristics of switches are be specified in the applicable specification sheet.

1.2 Part or Identifying number (PIN). The military PIN consists of the letter "M", the basic number of the specification sheet, an assigned dash number (see 3.1), and the letter N or S; where N indicates a non-screened item and S indicates a screened item.

EXAMPLE:

M55041/3-	01	N	or	S
Military designator and specification sheet number	Dash number	Non-screened		Screened

2. APPLICABLE DOCUMENTS

2.1 General. The documents listed in this section are specified in sections 3 and 4 of this specification. This section does not include documents cited in other sections of this specification or recommended for additional information or as examples. While every effort has been made to ensure the completeness of this list, document users are cautioned that they must meet all specified requirements documents cited in sections 3 and 4 of this specification, whether or not they are listed.

2.2 Government documents.

2.2.1 Specifications, standards, and handbooks. The following specifications, standards, and handbooks form a part of this document to the extent specified herein. Unless otherwise specified, the issues of these documents are those cited in the solicitation or contract (see 6.2).

FEDERAL STANDARDS

FED STD H28	-	Screw Thread Standards for Federal Services.
FED-STD-595/27038	-	Colors Used in Government Procurement.

Comments, suggestions or questions on this document should be addressed to DLA Land and Maritime, ATTN: VAT, Post Office Box 3990, Columbus, OH 43218-3990, or emailed to TubesAmps@dla.mil. Since contact information can change, you may want to verify the currency of this address information using the ASSIST Online database at https://assist.daps.dla.mil

DEPARTMENT OF DEFENSE SPECIFICATIONS

MIL-DTL-3922	-	Flanges, Waveguide, General Purpose, General Specification for.
MIL-DTL-5541	-	Chemical Conversion Coatings on Aluminum and Aluminum Alloys.
MIL-PRF-22750	-	Coating, Epoxy High Solids.
MIL-PRF-23377	-	Primer Coatings, Epoxy, High-Solids.
MIL-P-24691/3	-	Pipe and Tube, Corrosion-Resistant, Stainless Steel, Seamless or Welded.
MIL-DTL-38999	-	Connectors, Electrical, Circular, Miniature, High Density, Quick Disconnect (Bayonet, Threaded, and Breech Coupling), Environment Resistant, Removable Crimp and Hermetic Solder Contacts, General Specification for.
MIL-DTL-55041/10	-	Switch, Waveguide, Electromechanical, Latching, Frequency Range 8.6 to 10.3 GHz.
MIL-DTL-55041/11	-	Switch, Waveguide, 1P2T, Latching.
MIL-DTL-83723	-	Connectors, Electrical, (Circular, Environment Resisting), Receptacles and Plugs, General Specification for.

DEPARTMENT OF DEFENSE STANDARDS

MIL-STD-202	-	Electronic and Electrical Component Parts.
MIL-STD-889	-	Dissimilar Metals.
MIL-STD-1285	-	Marking of Electrical and Electronic Parts.

(Copies of these documents are available online at https://assist.daps.dla.mil/quicksearch/ or https://assist.daps.dla.mil or from the Standardization Document Order Desk, Building 4D, 700 Robbins Avenue, Philadelphia, PA 19111-5094.)

2.3 Non-Government publications. The following document(s) form a part of this document to the extent specified herein. Unless otherwise specified, issues of these documents are those cited in the solicitation or contract (see 6.2).

ASME INTERNATIONAL (ASME)

ASME-B46.1 - Surface Texture, (Surface Roughness, Waviness and Lay).

(Copies of this document are available online at http://www.asme.org or from ASME International, Three Park Avenue, New York, NY 10018.)

ASTM INTERNATIONAL (ASTM)

ASTM-A240/A240MB	-	Chromium and Chromium-Nickel Stainless Steel Plate, Sheet, and Strip for Pressure Vessels and for General Applications.
ASTM-A666	-	Annealed or Cold-Worked Austenitic Stainless Steel Sheet, Strip, Plate, and Flat Bar.
ASTM-A693	-	Precipitation-Hardening Stainless and Heat-Resisting Steel Plate, Sheet, and Strip.
ASTM-B26/B26M	-	Aluminum-Alloy Sand Castings.
ASTM-B36/B36M	-	Plate, Brass, Sheet, Strip, and Rolled Bar.
ASTM-B85/B85M	-	Aluminum-Alloy Die Castings.
ASTM-B108/B108M	-	Aluminum-Alloy Permanent Mold Castings.
ASTM-B121/B121M	-	Plate, Leaded Brass, Sheet, Strip and Rolled Bar.
ASTM-B209	-	Aluminum and Aluminum-Alloy Sheet and Plate.
ASTM-B221	-	Aluminum and Aluminum-Alloy Extruded Bars, Rods, Wire, Profiles, and Tubes.

(Copies of these documents are available online at http://astm.org or from ASTM INTERNATIONAL, 100 Barr Harbor Drive, West Conshohocken, PA 19428-2959.)

NATIONAL CONFERENCE OF STANDARDS LABORATORIES (NCSL)

NCSL-Z540.3	-	Calibration Laboratories and Measuring and Test Equipment.

(Copies of the above document are available online at http://www.ncsli.org or from National Conference of Standards Laboratories (NCSL), 2995 Wilderness Place Suite 107, Boulder, CO 80301-5404, United States).

SAE INTERNATIONAL (SAE) AEROSPACE MATERIALS SPECIFICATIONS (AMS)

SAE-AMS-QQ-A-200	-	Aluminum Alloy, Bar, Rod, Shapes, Structural Shapes, Tube, and Wire, Extruded; General Specification for.
SAE-AMS-QQ-S-763	-	Steel Bars, Wire, Shapes, and Forgings; Corrosion Resistant.
SAE-AS50151	-	Connectors, Electrical, Circular Threaded, An Type, General Specification For

(Copies of these documents are available online at http://www.sae.org or from SAE World Headquarters, 400 Commonwealth Drive, Warrendale, PA 15096-0001).

2.4 Order of precedence. Unless otherwise noted herein or in the contract, in the event of a conflict between the text of this document and the references cited herein (except for related specification sheets), the text of this document takes precedence. Nothing in this document, however, supersedes applicable laws and regulations unless a specific exemption has been obtained.

3. REQUIREMENTS

3.1 Specification sheets. The individual item requirements shall be as specified herein and in accordance with the applicable specification sheets. In the event of any conflict between requirements of this specification and the specification sheets (MIL-DTL-55041/10 and MIL-DTL-55041/11), the latter shall govern (see 6.2).

3.2 Material. The material for each part shall be as specified herein; however, when a definite material is not specified, a material shall be used which will enable the waveguide switches to meet the performance requirements of this specification. Acceptance or approval of any constituent material shall not be construed as a guaranty of the acceptance of the finished product. The material shall be selected from the following:

a. Aluminum alloy plates and sheets shall conform to composition 6061 of ASTM-B209; extruded aluminum alloy shall conform to composition 6063 of ASTM-B221 (non-aerospace applications) and SAE-AMS-QQ-A-200 (aerospace and unspecified applications) or composition 6061 of ASTM-B209.

b. Corrosion-resisting steel plates, sheets, and strips shall conform to ASTM-A666 (cold-worked grades), ASTM-A693 (precipitation-hardening grades) or ASTM-A240/A240M (all other grades).

c. Corrosion-resisting forgings shall conform to SAE-AMS-QQ-S-763 and corrosion-resisting steel pipe shall conform to MIL-P-24691/3.

d. Copper alloy sheet shall conform to ASTM-B36/B36M and ASTM-B121/B121M.

e. Aluminum alloy castings shall conform to alloy A360 of ASTM-B85/B85M, class 8 alloy 356 of ASTM-B108/B108M, or alloy 40E of ASTM-B26/B26M.

3.2.1 Dissimilar metals. Unless suitably protected against electrolytic corrosion, dissimilar metals shall be as specified in MIL-STD-889.

3.2.2 Fungus. Materials used in the construction of switches shall be fungus inert (see 6.4.12).

3.2.3 Pure tin. The use of pure tin as an underplate or final finish is prohibited both internally and externally. Tin content of the waveguide switch components and solder shall not exceed 97 percent, by mass. Tin shall be alloyed with a minimum of 3 percent lead, by mass (see 6.7).

3.3 Design and construction. Waveguide switches shall be of the design, construction, and physical dimensions specified (see 3.1).

3.3.1 Operating frequency range. The frequency range shall be as specified (see 3.1).

3.3.2 Operation. Switches shall be either manually or electromechanically operated.

3.3.2.1 Operating voltage. When applicable, the nominal operating voltage shall be as specified (see 3.1).

3.3.3 Configuration. Switches shall be furnished with the number of positions specified (see 3.1).

3.3.4 Threaded parts. All threaded parts shall be in accordance with FED-STD-H28. Inserts shall be provided when added thread strength and life is needed for mounting holes.

3.3.5 Diode suppression. When a diode is used for radio frequency (RF) noise suppression, it shall be protected by another diode such that applying reverse polarity to the actuating circuit does not cause excessive current flow in the suppressing diode. Unless otherwise specified, all suppressing diodes shall be mounted inside the switch body.

3.3.6 Waveguide and connector cover. The connector and waveguide opening of the switches shall be sealed with covers to prevent damage and the entrance of moisture and foreign material during storage.

3.3.7 Connectors. The connector receptacle shall conform with SAE-AS50151, MIL-DTL-38999, or MIL-DTL-83723. All connectors shall have their metallic shells grounded to the switch metallic casing.

3.3.8 Waveguide flanges. The waveguide flange faces and mounting holes shall mate with waveguide flanges conforming with MIL-DTL-3922.

3.3.9 Solder terminals. Solder terminals shall be in accordance with best manufacturing practices.

3.3.10 Indicating circuits (see 6.4.4). When specified (see 3.1), switches shall be designed with separate contacts and terminals to operate a pilot light or other device which shall indicate each position of the switch.

3.3.11 Interlock circuit. When specified (see 3.1), switches shall be designed with separate contacts and terminals to operate or control the output of a transmitter or other RF power source, during switching or at any one of the switch positions. Interlocks shall be activated before rotor has traveled less than 6 degrees across the waveguide opening.

3.3.12 Finish. Unless otherwise specified (see 3.1), the finish shall be as specified in 3.3.12.1 and 3.3.12.2.

3.3.12.1 Waveguide flange face surface. The flange face surface of the switch shall be finished to 63 root-mean-square microinches in accordance with ASME-B46.1. Aluminum flange face shall be coated with a chromate-type conversion coating in accordance with MIL-DTL-5541, class 1A.

3.3.12.2 Exterior surface. All exterior surfaces of the switch, except flange faces and connectors, shall be painted in accordance with MIL-PRF-23377 and MIL-PRF-22750.

3.3.13 Temperature range. The temperature range shall be as specified (see 3.1).

3.3.14 Weight. The weight shall not exceed the limit specified (see 3.1).

3.4 Screening. All screened switches produced to this specification shall be screened in accordance with table III and 4.7.2. After screening, the switch shall be subjected to group A inspection.

3.5 Run-in. All electromechanically operated switches produced to this specification shall be run-in in accordance with 4.7.3.

3.6 Pull-in voltage (see 6.4.6). When electromechanically operated switches are tested as specified in 4.7.4, the pull-in voltage value shall not exceed the value specified (see 3.1). The measured pull-in voltage at the highest operating temperature shall not exceed the maximum specified value (see 3.1) by more than 10 percent.

3.7 Dropout voltage (see 6.4.1). When fail-safe electromechanically operated switches are tested as specified in 4.7.5, the dropout voltage value shall be not less than the value specified (see 3.1).

3.8 Operating current (see 6.4.10). When electromechanically operated switches are tested as specified in 4.7.6, the maximum operating current shall not exceed the value specified (see 3.1). The measured operating current at the lowest operating temperature shall not exceed the maximum specified value by more than 25 percent.

3.9 Holding current (see 6.4.3). When fail-safe electromechanically operated switches are tested as specified in 4.7.7, the holding current value shall not exceed the value specified (see 3.1). The measured holding current at the lowest operating temperature shall not exceed the maximum specified value (see 3.1) by more than 25 percent.

3.10 Rotor motion delay (when specified) (see 6.4.7 and 3.1). When electromechanically operated switches are tested as specified in 4.7.8, the rotor motion delay time shall not exceed the time specified (see 3.1).

3.11 Dielectric withstanding voltage. When electromechanically operated switches are tested as specified in 4.7.9, there shall be no evidence of voltage breakdown.

3.12 Transient interference (RFI) (when specified) (see 3.1). When electromechanically operated switches are tested as specified in 4.7.10, the switch shall not conduct or radiate RF noise to a degree greater than the following limiting values:

a. DC switches +50 percent or -150 percent of nominal line voltage (28 V dc limit is ± 42 V peak).

b. AC switches ± 2 x nominal RMS line voltage (115 V ac limit is ± 230 V peak).

3.13 Isolation. When switches are tested as specified in 4.7.11, the isolation between the activated and any other ports shall be not less than the value specified (see 3.1).

3.14 Voltage standing wave ratio (VSWR). When switches are tested as specified in 4.7.12, the input VSWR shall not exceed the value specified (see 3.1).

3.15 Insertion loss. When switches are tested as specified in 4.7.13, the insertion loss shall not exceed the value specified (see 3.1).

3.16 Switching time (see 6.4.8). When electromechanically operated switches are tested as specified in 4.7.14, the time required to switch from one position to an adjacent position shall not exceed the time specified (see 3.1).

3.17 RF energy leakage (when specified) (see 3.1). When switches are tested as specified in 4.7.15, the RF leakage shall not exceed the value specified (see 3.1).

3.18 RF power handling capability. When switches are tested as specified in 4.7.16, with specified RF power (see 3.1) passing through the switch, no evidence of breakdown, charring, arcing, or overheating shall be evident. Following this test, the switch shall be capable of meeting the specified insertion loss and isolation requirements. Unless otherwise specified (see 3.1), switches shall not be required to switch under power.

3.19 Cycle life. When tested as specified in 4.7.17, the switch shall show no evidence of physical damage or deterioration. Following the test, switching time, insertion loss, and VSWR shall be not greater than and isolation shall be no less than the initial values specified (see 3.1).

3.20 Thermal shock. When electromechanically operated switches are tested as specified in 4.7.18, the switch shall be capable of reliable operation. Following the test, the switch shall be capable of meeting the specified insertion loss, isolation, and switching time requirements.

3.21 Altitude and cold. When electromechanically operated switches are tested as specified in 4.7.19, there shall be no evidence of malfunction. Switches shall operate within the initial switching time specified (see 3.1) and withstand dielectric withstanding voltage without breakdown (see 4.7.9).

3.22 Moisture resistance. When electromechanically operated switches are tested as specified in 4.7.20, the switch shall be capable of reliable operation. Following the test, the switch shall be capable of meeting the specified isolation, VSWR, insertion loss, holding current, pull-in voltage, dropout voltage, switching time and rotor motion delay requirement.

3.23 Pressure (when specified) (see 3.1). When pressurized switches are tested as specified in 4.7.21 at the specified pressure (see 3.1), the leak rate of the switches shall be less than 5.0 standard atmosphere cubic centimeter per minute or shall be such that no stream of bubbles emanates from the switches.

3.24 Vibration. When tested as specified in 4.7.22, there shall be no evidence of displacement or loosening of parts. Following this test, the switch shall be capable of meeting the specified isolation, VSWR, insertion loss, holding current, pull-in voltage, dropout voltage, switching time, and rotor motion delay requirements.

3.25 Shock (specified pulse). When tested as specified in 4.7.23, the switches shall show no evidence of damage or loosening of parts. Following this test, the switch shall be capable of meeting the specified isolation, insertion loss, and switching time requirements.

3.26 Explosion (when specified) (see 3.1). When switches are tested as specified in 4.7.24, there shall be no explosion within the test chamber. Following this test, the switch shall be capable of meeting the switching time requirement.

3.27 Salt atmosphere (when specified) (see 3.1). When tested as specified in 4.7.25, the surfaces of the switch shall exhibit no marked pitting or corrosion. Following this test, the switch shall be capable of meeting the switching time, insertion loss, and dielectric withstanding voltage requirements.

3.28 Sand and dust. When electromechanically operated switches are tested as specified in 4.7.26, there shall be no evidence of sand and dust accumulation within the enclosure.

3.29 Post electrical tests, environmental (see 4.7.27). Following the environmental tests, pull-in and dropout voltages, operating and holding currents, rotor motion delay, dielectric withstanding voltage, isolation, VSWR, insertion loss and switching time shall meet the specified values.

3.30 Marking. Switches shall be marked in accordance with MIL-STD-1285 with PIN (see 1.2) and manufacturer's source code. The marking shall remain legible after completing all environmental tests specified herein.

a. Electromechanically operated switches shall be marked with the type of supply, the operating voltage, and the frequency in the case of an ac supply.

b. Waveguide ports shall be marked in a logical manner to identify the input and output ports.

3.31 Recycled, recovered, or environmentally preferable materials. Recycled, recovered, or environmentally preferable materials should be used to the maximum extent possible, provided that the material meets or exceeds the operational and maintenance requirements, and promotes economically advantageous life cycle costs.

3.32 Workmanship. Switches shall be manufactured and processed in such a manner as to be uniform in quality, and the surfaces of the switch shall be free from tool marks, burrs, deep scratches, and other defects that will affect life, serviceability, or appearance.

4. VERIFICATION

4.1 Test equipment and inspection facilities. Test and measuring equipment and inspection facilities of sufficient accuracy, quality and quantity to permit performance of the required inspection shall be established and maintained by the manufacturer. The establishment and maintenance of a calibration system to control the accuracy of the measuring and test equipment shall be in accordance with NCSL-Z540.3.

4.2 Classification of inspections. The inspections specified herein are classified as follows:

a. Materials inspection (see 4.3).

b. First article inspection (see 4.5).

c. Conformance inspection (see 4.6).

4.3 Materials inspection. Materials inspection shall consist of verifying that the materials listed in table I, used in fabricating the switches, are in accordance with the applicable referenced specifications or requirements prior to fabrication.

TABLE I. Materials inspection.

Material	Requirement paragraph	Applicable documents
Aluminum alloy	3.2	ASTM-B221, ASTM-B209, SAE-AMS-QQ-A-200
Corrosion-resisting steel	3.2	ASTM-A240/A240M, ASTM-A666 and ASTM-A693
Corrosion-resisting steel pipe	3.2	MIL-P-24691/3
Corrosion-resisting forging	3.2	SAE-AMS-QQ-S-763
Copper alloy sheet	3.2	ASTM-B36/B36M, ASTM-B121/B121M
Aluminum alloy casting	3.2	ASTM-B85/B85, ASTM-B108/108M, ASTM-B26/B26M
Dissimilar metals	3.2.1	MIL-STD-889
Fungus	3.2.2	See 6.4.12
Connectors	3.3.7	SAE-AS50151, ML-DTL-38999, MIL-DTL-83723
Waveguide flanges	3.3.8	MIL-DTL-3922
Finishes	3.3.12	ASME B46.1, MIL-DTL-5541, MIL-PRF-23377, MIL-PRF-22750, FED-STD-595

4.4 Inspection conditions. Unless otherwise specified herein, all inspections shall be performed in accordance with the test conditions specified in the "GENERAL REQUIREMENTS" of MIL-STD-202.

4.4.1 Test method deviation. Deviation from the specified test methods are allowed provided that it is demonstrated to the acquiring activity or their agent that such deviations in no way relax the requirements of this specification and that they are approved before testing is performed. For proposed test deviations, test method comparative error analysis shall be made available to the acquiring activity or their agent for review and approval.

4.5 First article inspection. First article inspection shall be performed at a laboratory acceptable to the Government on sample units produced with equipment and procedures normally used in production. First article approval obtained for each group (see Appendix A) shall constitute first article approval for all switches with characteristics for that group.

4.5.1 Sample size. The sample size shall be four.

4.5.2 Inspection routine. The sample shall be subjected to the first article inspection specified in table II, in the order shown. All units shall be subjected to the inspection of group I. The sample shall then be divided into two groups of two units each (see 4.5.1). The sample units shall then be subjected only to the inspections indicated for their particular group.

TABLE II. First article inspection.

Inspection	Requirement paragraph	Test method paragraph
Group I (all samples)		
Screening (see table III for screened switches) - - -	3.4	4.7.2
Visual and mechanical inspection (for nonscreened switches) - - - - - - - - - - - - - - - - - - -	3.1, 3.3 through 3.3.12, 3.3.14, 3.30, and 3.32	4.7.1
Run-in (for nonscreened switches) - - - - - - - - - - - -	3.5	4.7.3
Pull-in voltage 1/ -	3.6	4.7.4
Dropout voltage 3/ -	3.7	4.7.5
Operating current 1/ -	3.8	4.7.6
Holding current 3/ -	3.9	4.7.7
Rotor motion delay 1/ 2/ -	3.10	4.7.8
Dielectric withstanding voltage 1/ - - - - - - - - - - - -	3.11	4.7.9
Transient interference (RFI) 1/ 2/ - - - - - - - - - - - -	3.12	4.7.10
Isolation -	3.13	4.7.11
VSWR -	3.14	4.7.12
Insertion loss -	3.15	4.7.13
Switching time 1/ -	3.16	4.7.14
Group II (2 samples)		
RF energy leakage 2/ -	3.17	4.7.15
RF power handling capability - - - - - - - - - - - - - - -	3.18	4.7.16
Cycle life -	3.19	4.7.17
Post electrical tests -	3.29	4.7.27
Group III (2 samples)		
Thermal shock 1/ -	3.20	4.7.18
Altitude and cold 1/ -	3.21	4.7.19
Moisture resistance 1/ -	3.22	4.7.20
Pressure 2/ -	3.23	4.7.21
Vibration -	3.24	4.7.22
Shock (specified pulse) -	3.25	4.7.23
Explosion 1/ -	3.26	4.7.24
Salt atmosphere -	3.27	4.7.25
Sand and dust 1/ -	3.28	4.7.26
Post electrical tests 4/ -	3.29	4.7.27

1/ For electromechanically operated waveguide switches only.
2/ When specified.
3/ For fail-safe electromechanically operated waveguide switches only.
4/ The applicable post electrical tests shall be performed after the last environmental test is completed.

4.5.3 Failures. One or more failures shall be cause for refusal to grant first article approval. A failure shall be anything that does not meet the requirements of the specification.

4.5.4 Disposition of first article approval sample units. Sample units which have been subjected to first article approval testing shall not be delivered on any contract or purchase order. Unless otherwise specified, the contractor shall furnish the sample units with the first article approval test report. The samples shall be retained by the Government or, at the option of the acquiring activity and with the agreement of the contractor, returned to the contractor for storage. Samples stored by the contractor shall not be disposed of without acquiring activity approval.

4.6 Conformance inspection.

4.6.1 Inspection of product for delivery. Inspection of product for delivery shall consist of group A inspection and, when applicable, screening.

4.6.1.1 Inspection lot. An inspection lot shall consist of all waveguide switches of the same PIN, produced under essentially the same conditions, and offered for inspection at one time.

4.6.1.2 Screening. Screening shall consist of the inspections specified in table III, in the order shown. Switches shall pass screening before being subjected to group A inspection.

TABLE III. Screening.

Inspection	Requirement paragraph	Test method paragraph
Thermal shock -	3.20	4.7.2.1
Run-in -	3.5	4.7.2.2
Visual and mechanical inspection - - - - - - - - - - - - - - -	3.1, 3.3 through 3.3.12, 3.3.14, 3.30, and 3.32	4.7.1

4.6.1.3 Group A inspection. Group A inspection shall consist of the inspections specified in table IV, in the order shown.

4.6.1.4 Sampling plan. All screened switches shall be subjected to screening and group A inspection. All nonscreened switches shall be subjected to group A inspection. Defective units shall be individually rejected.

4.6.1.5 Disposition of sample units. Switches which have passed all the group A inspection shall be delivered on the contract or purchase order.

4.6.1.6 Rejected items. If an inspected item is rejected, the contractor may rework it to correct the defect and resubmit for reinspection. Such items shall be separate from new items, and shall be clearly identified as reinspected items.

TABLE IV. Group A inspection.

Inspection	Requirement paragraph	Test method paragraph
Screening (see table III for screened switches - - - -	3.4	4.7.2
Visual and mechanical inspection (for nonscreened switches) - - - - - - - - - - - - - - - - - - -	3.1, 3.3 through 3.3.12, 3.3.14, 3.30 and 3.32	4.7.1
Run-in (for nonscreened switches) - - - - - - - - - - - -	3.5	4.7.3
Pull-in voltage 1/ -	3.6	4.7.4
Dropout voltage 3/ -	3.7	4.7.5
Operating current 1/ -	3.8	4.7.6
Holding current 3/ -	3.9	4.7.7
Rotor motion delay 1/ 2/ -	3.10	4.7.8
Dielectric withstanding voltage 1/ - - - - - - - - - - - -	3.11	4.7.9
Transient interference (RFI) 1/ 2/ - - - - - - - - - - - -	3.12	4.7.10
Isolation -	3.13	4.7.11
VSWR -	3.14	4.7.12
Insertion loss -	3.15	4.7.13
Switching time 1/ -	3.16	4.7.14

1/ For electromechanically operated waveguide switches only.
2/ When specified.
3/ For fail-safe electromechanically operated waveguide switches only.

4.6.2 Periodic inspection. Periodic inspection shall consist of group B inspection. Except where the results of these inspections show noncompliance with the applicable requirements (see 4.6.2.5), delivery of products which have passed group A shall not be delayed pending the results of the periodic inspection.

4.6.2.1 Group B inspection. Group B inspection shall consist of the inspections specified in table V, in the order shown. Group B inspection shall be made on sample units selected from inspection lots which have passed the group A inspection.

4.6.2.2 Sampling plan. Four sample units (see 4.5.1) shall be selected every 24 months. The first inspection shall be 24 months after the date of notification of first article approval.

4.6.2.3 Failures. If one or more sample units fail to pass group B inspection, the sample shall be considered to have failed.

4.6.2.4 Disposition of sample units. Sample units which have been subjected to group B inspection shall not be delivered on any contract or purchase order.

4.6.2.5 Noncompliance. If a sample fails to pass group B inspection, the manufacturer shall take corrective action on the materials or processes, or both, as warranted, and on all units of products which can be corrected and which were manufactured under essentially the same conditions, with essentially the same materials, processes, etc., and which are considered subject to the same failure. Acceptance of the product shall be discontinued until corrective action, acceptable to the Government, has been taken. After the corrective action has been taken, group B inspection shall be repeated on additional sample units (all inspection, or the inspection which the original sample failed, at the option of the Government). Group A inspection may be reinstituted; however, final acceptance shall be withheld until the group B reinspection has shown that the corrective action was successful. In the event of failure after reinspection, information concerning the failure and the corrective action taken shall be furnished to the acquiring activity.

TABLE V. Group B inspection.

Inspection	Requirement paragraph	Test method paragraph
Cycle life - - -

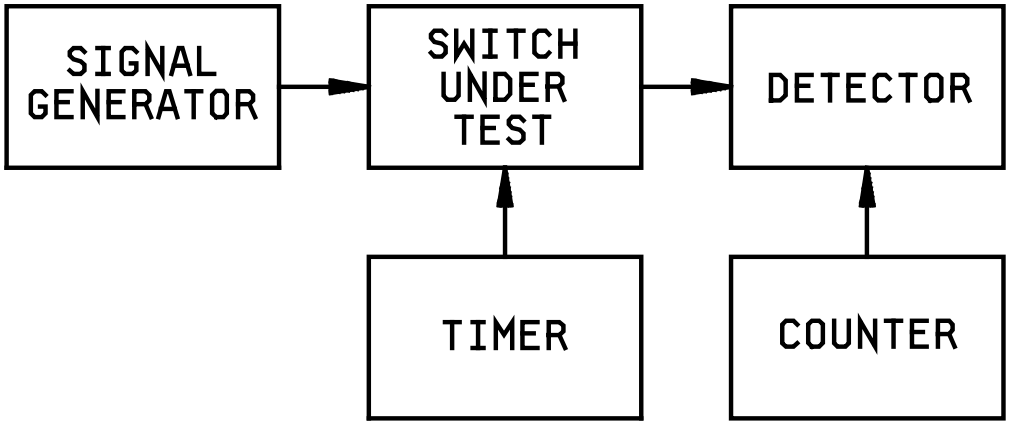

FIGURE 1. Run-in and cycle life test setup.

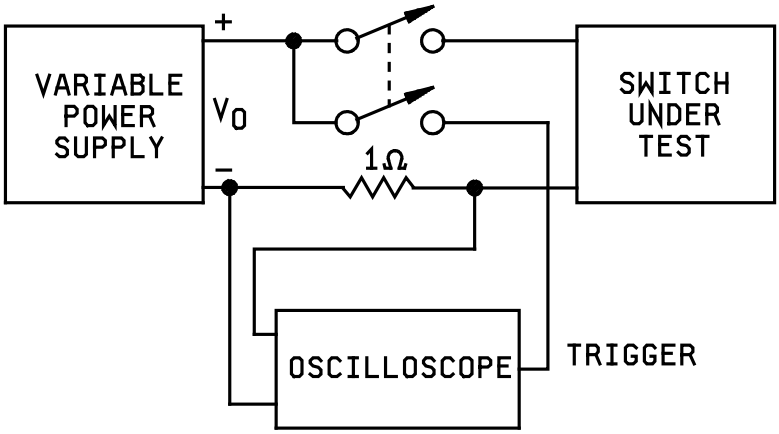

FIGURE 2. Operating and holding current test setup.

4.7.8 Rotor motion delay (see 3.10). With the switch at room ambient temperature, apply nominal operating voltage (see 3.1) and measure the rotor motion delay in both the energized and deenergized position using the test setup of figure 3. Repeat the rotor motion delay measurement for each electrically selected position of the switch.

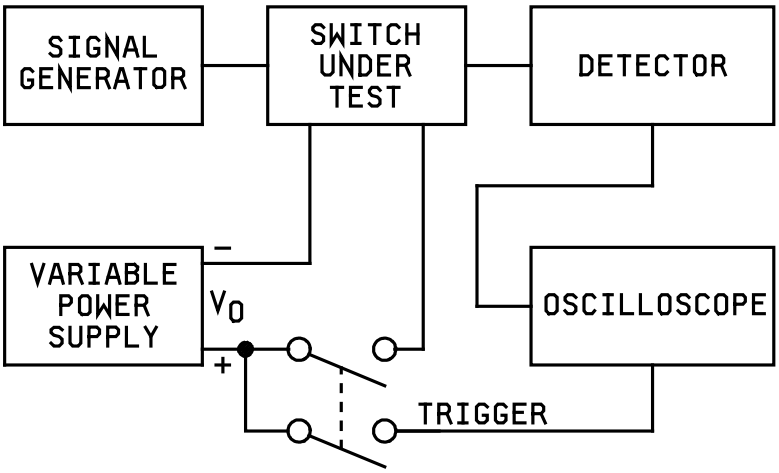

FIGURE 3. Rotor motion delay and switching time test setup.

4.7.9 Dielectric withstanding voltage (see 3.11). Switches shall be tested in accordance with method 301 of MIL-STD-202. The following details apply:

a. Magnitude of test voltage:

(1) AC operated switches: 500 volts RMS plus twice the nominal operating voltage.

(2) DC operated switches: 500 volts dc plus twice the nominal operating voltage.

b. Points of application of test voltage:

(1) Indicator and interlock circuit: The test voltage shall be applied in turn between each separate position indicator and interlock circuit terminal and the switch housing (ground). All open indicator and interlock circuit terminals shall be grounded to the switch housing (ground) for this test.

(2) Actuator circuit: The test voltage shall be applied between the actuator terminals and the switch housing (ground). All actuator terminals shall be connected together for this test so that any RFI noise suppression devices are not damaged.

4.7.10 Transient interference (RFI) (see 3.12). Transient interference emanating from the switch shall be measured on the power lines using the test procedure of figure 4.

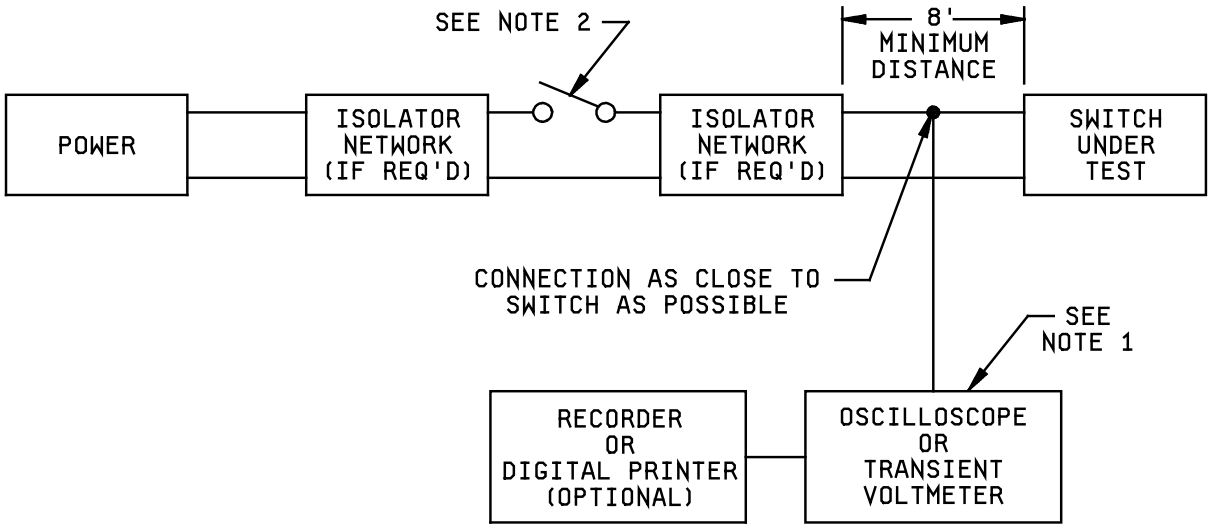

NOTES:

1. Oscilloscope or transient voltmeter should be of the memory storage type and be capable of detecting and measuring.

Magnitude:	± 1 volt to ± 1,000 volts.
Width:	50 nanoseconds to 100 milliseconds.
Pulse repetition frequency:	Single shot to 500 pps.

2. Use of a low noise mercury switch is recommended to activate the waveguide switch.

   Procedure:

   a. Activate switch at least 20 times.

   b. Highest reading obtained is to be recorded for both make and break.

FIGURE 4. RFI transient test arrangement and test procedure.

4.7.11 Isolation (see 3.13). Connect the equipment as illustrated in figure 5. The characteristics of the low pass filter shall be such that it will attenuate all harmonics of the RF signal for at least 30 dB. Set the start/stop limits on the sweep oscillator to the specified lowest and highest frequency values, respectively. Connect the calibrated mismatch to the output of the network analyzer. Adjust the horizontal sensitivity of the X-Y recorder for 10 inches of travel and using the sweep oscillator sweep output signal, set the sweep width for the same value. Adjust the RF power level on the sweep oscillator to a level that will provide the best detection efficiency for the detector. With the sweep oscillator adjusted and the network analyzer and X-Y recorder calibrated, draw calibration lines in 1 dB step above and below the specified isolation value of the switch on the X-Y recorder. Remove the calibrated mismatch and insert the switch under test. Terminate all unused ports with matched loads. With the switch at room ambient temperature, apply the nominal operating voltage and record the isolation versus frequency on the recorder. The frequency shall be labeled and recorded at not less than 5 equally spaced points evenly distributed across the frequency band. Repeat the above procedures for any other adjacent ports. If the test must be made at fixed frequencies, the test shall be made at not less than 7 equally spaced points evenly distributed across the band width of the switch. The overall inaccuracy of isolation measurements shall be no greater than 5 percent. A means shall be provided for producing a permanent record of the switch's isolation versus frequency if fixed frequencies or other than the above test setup is used.

4.7.12 Voltage standing wave ratio (see 3.14). With the switch at room ambient temperature, apply nominal operating voltage and measure the VSWR for each RF path across the specified range, using the test setup of figure 6. Relatively low RF input power shall be used for this test. Each unused port shall be terminated in a matched load. A means shall be provided for producing a permanent record of the switch's VSWR versus frequency. The VSWR shall be recorded in increments of 0.05 between VSWR limits of 1.02:1 and 1.5:1 and 0.1 above 1.5:1. If the test must be made at fixed frequencies, the test shall be made at not less than 7 equally spaced points evenly distributed across the bandwidth of the switch. If VSWR is not directly measured; that is, if return loss is measured and VSWR calculated from that measurement, the permanent record shall indicate the worst case VSWR numerically and shall provide the calculation used to obtain the calculated VSWR. The measurement system and permanent record shall provide a minimum accuracy of .04 over the frequency ranges below 26.5 GHz and a minimum accuracy of .08 over the frequency ranges 26.5 GHz and above.

4.7.13 Insertion loss (see 3.15). With the switch at room ambient temperature, apply nominal operating voltage (see 3.1) and measure the insertion loss for each RF path, using the general test procedures and test setup of 4.7.11. The calibration lines on the recorder shall be .02 dB step above and below the specified insertion loss value. The measurement system and permanent record shall provide a minimum accuracy of .04 dB over the frequency ranges below 26.5 GHz and a minimum accuracy of .08 dB over the frequency ranges 26.5 GHz and above.

4.7.14 Switching time (see 3.16). For electrically operated switches, the switching time from both the energized and deenergized positions shall be measured, using the test setup of figure 3. With the switch at room ambient temperature, apply RF and dc power and measure the time lapse between application of dc actuator power and final positioning of the RF portion of the switch for the position selected. Measure the time lapse for the switch to go from an energized position to a de-energized position. Repeat these tests for each electrically selected position of the switch.

4.7.15 RF energy leakage (see 3.17). Using the test setup shown in figure 7, the input of the switch shall be furnished with a minimum of 10 milliwatts of RF power at the center frequency of the switch pass band. Each output port shall be terminated in a matched load. The entire external surface of the switch shall be explored for maximum RF leakage. This test shall be repeated for each switch position. The maximum RF leakage shall be no higher than specified (see 3.1).

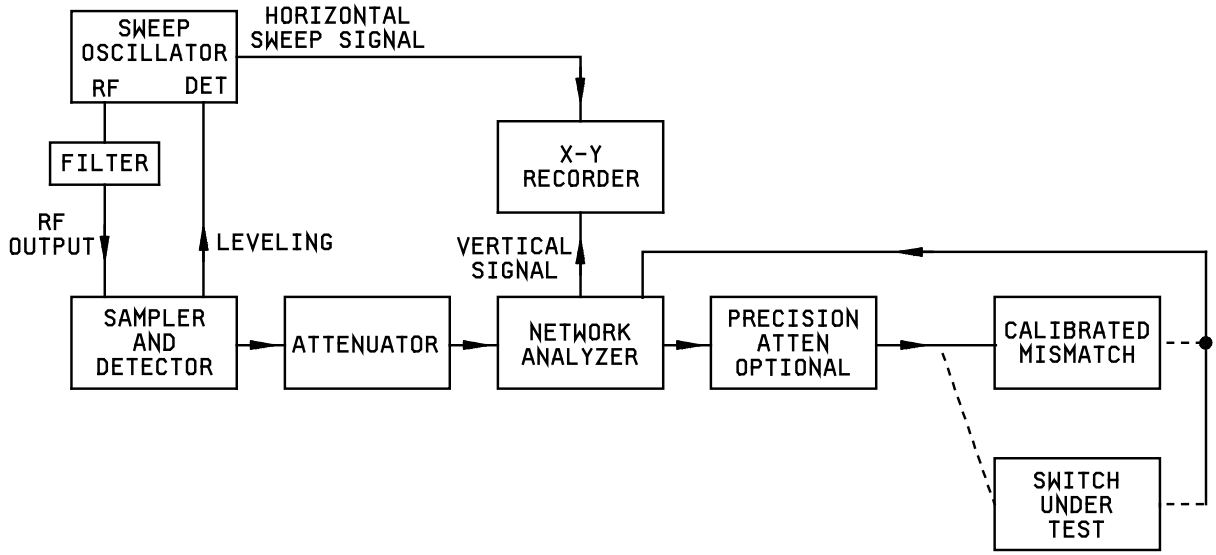

FIGURE 5. Isolation test setup.

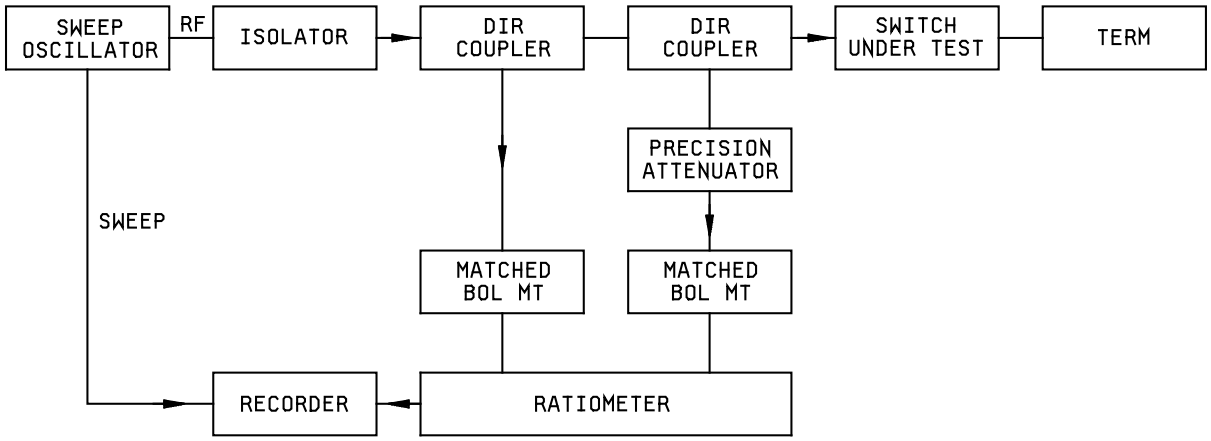

FIGURE 6. Voltage standing wave ratio measurement test setup.

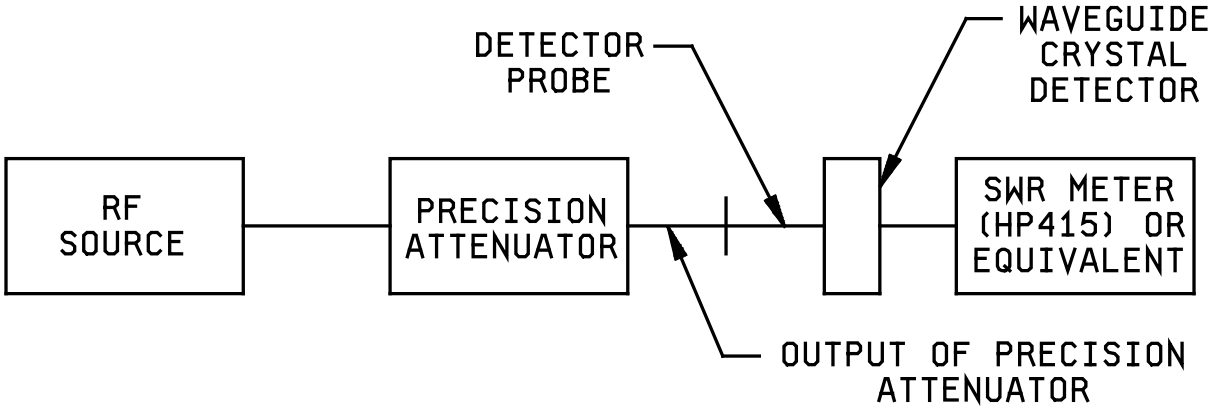

Test setup for calibration for RF leakage detector. The calibration sensitivity of the test position shall be 90 dB relative to the power output of the RF source.

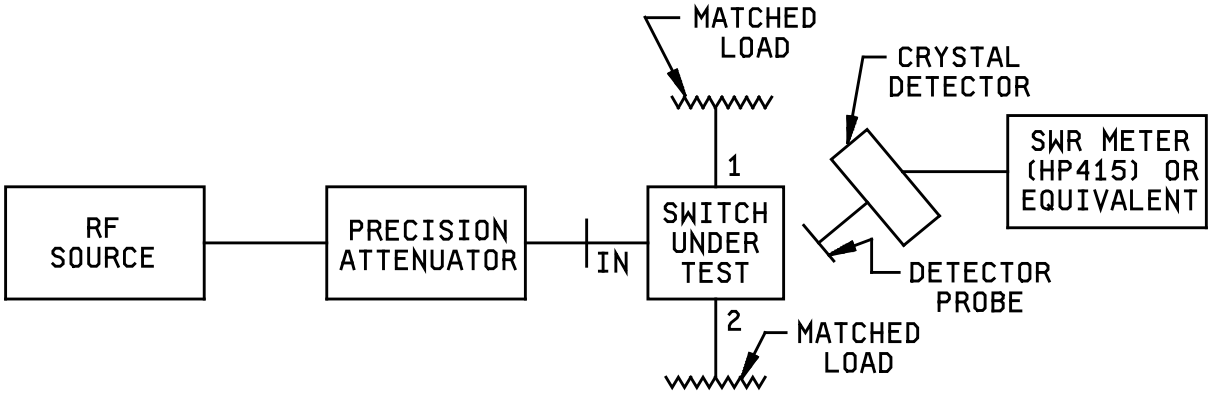

FIGURE 7. Test setup for RF leakage.

4.7.16 RF power handling capability (see 3.18). The RF power sources shall be capable of furnishing the specified average and peak power to the input of the switch. The output of the switch shall be terminated into a matched dummy load. When specified (see 3.1), the RF section shall be pressurized; otherwise, the RF section shall be vented to atmospheric pressure (30 ± 2 inches mercury) during the test. The power source shall be adjusted to the lowest specified frequency and the specified average power. Apply this power to the input of the switch for at least 1 hour. At the end of this time, remove the average power and apply the specified peak power (at the same frequency) to the input of the switch for at least 5 minutes. Repeat these procedures at the middle frequency and at the highest specified frequency. The above procedure shall be repeated for each position of the switch. If required to switch under power and if the switch design includes interlock circuits used to interrupt the RF power source during switching (see 3.1), the circuits shall be used to do so during this test. During and following the test, the switches shall be examined for evidence of breakdown, charring, arcing or overheating.

4.7.17 Cycle life (see 3.19). The switch shall be securely mounted on a block weighing not less than 5 times the weight of the switch; the switch temperature shall be allowed to stabilize at room ambient temperature for not less than 1 hour before the beginning of the test. Unless specified, RF power need not be applied to the switch. The switch shall then be operated, at a rate not to exceed one position per second, for the specified number of cycles (see 3.1). One cycle shall consist of switching from the initial position into each other position and returning to the initial position. The operating voltage shall be nominal (+10, -0 percent). When indicator or interlock circuits are included in the design, they shall be energized with the specified current and voltage (see 3.1) during this test. The contact resistance of these circuits shall be measured at the switch connector terminals before and after this test. Following this test, switching time, VSWR, insertion loss and isolation shall be measured as specified in 4.7.14, 4.7.12, and 4.7.11, respectively.

4.7.18 Thermal shock (see 3.20). The switch shall be tested in accordance with test method 107 of MIL-STD-202. Unless otherwise specified (see 3.1), test condition B applies. The waveguide ports shall be covered during this test.

4.7.19 Altitude and cold (see 3.21). Switches shall be placed in a pressure chamber maintained at a temperature of -55°C +0°C, -5°C for 24 hours. After temperature stabilization, the switching time shall be measured as specified in 4.7.14 (except the temperature shall be maintained at -55°C). The pressure shall then be reduced from standard barometric pressure to 1.3 inches of mercury (approximately 70,000 feet elevation) and then allowed to stabilize. At this reduced pressure and during the last 4 hours of the 24 hour holding period, the switches shall be tested for dielectric withstanding voltage and switching time as specified in 4.7.9 and 4.7.14, respectively (the reduced pressure and temperature of -55°C shall be maintained). Only one half the voltage specified in 4.7.9 need be applied for the dielectric withstanding voltage test.

4.7.20 Moisture resistance (see 3.22). The switch, with the waveguide ports sealed, shall be tested in accordance with test method 106 of MIL-STD-202 except that steps 7a and 7b may be omitted. The following details apply:

a. Initial measurements: Not applicable.

b. Polarization voltage: Not applicable.

c. Loading voltage: Not applicable.

4.7.21 Pressure (see 3.23). With the switch at room ambient temperature, the RF portion shall be capped and then pressurized at the pressure specified (see 3.1). The applied pressure shall be measured at the switch, not at the pressure source. The switch shall then be submerged for one minute in fresh tap water that is at 25 ± 5°C. Repeat the test with the switch at the lower temperature extreme.

4.7.22 Vibration (see 3.24). The switch shall be tested in accordance with method 201 of MIL-STD-202 except that the motion shall be applied for a period of 10 minutes in each of the 3 mutually perpendicular directions (a total of 30 minutes). The switch shall be firmly secured to the vibration platform without the use of shock isolators. Unless otherwise specified, the switch need not be energized for this test.

4.7.23 Shock (specified pulse) (see 3.25). The switch shall be securely mounted, without isolators, and subjected to the shock test in accordance with condition K of method 213, MIL-STD-202.

4.7.24 Explosion (see 3.26). The switch shall be tested in accordance with test method 109 of MIL-STD-202. Indicator and interlock circuits shall be energized at rated voltage and current (see 3.1). Unless otherwise specified (see 3.1), switches that are pressurized and are designed so that the switching mechanism is completely isolated from the RF path need not have RF power applied. However, all other switches shall be tested with full RF power applied.

4.7.25 Salt atmosphere (see 3.27). The switch shall be tested in accordance with test condition B of method 101, MIL-STD-202. The waveguide ports shall be sealed during this test.

4.7.26 Sand and dust (see 3.28). The switch shall be tested in accordance with step 1 only of test method 110, MIL-STD-202. The air velocity shall be between 100 and 500 feet per minute. Unless otherwise specified (see 3.1), protective caps shall be used to cover the waveguide ports.

4.7.27 Post electrical tests, environmental. Following environmental tests, pull-in and dropout voltages, operating and holding currents, rotor motion delay (when specified), dielectric withstanding voltage, isolation, VSWR, insertion loss and switching time shall be measured as specified in 4.7.4 through 4.7.9 and 4.7.11 through 4.7.14, respectively.

5. PACKAGING

5.1 Packaging. For acquisition purposes, the packaging requirements shall be as specified in the contract or order (see 6.2). When packaging of materiel is to be performed by DoD or in-house contractor personnel, these personnel need to contact the responsible packaging activity to ascertain packaging requirements. Packaging requirements are maintained by the Inventory Control Point's packaging activities within the Military Service or Defense Agency, or within the military service's system commands. Packaging date retrieval is available from the managing Military Department's or Defense Agency's automated packaging files, CD-ROM products, or by contacting the responsible packaging activity.

6. NOTES

(This section contains information of a general or explanatory nature that may be helpful, but is not mandatory.)

6.1 Intended use. Waveguide switches covered by this specification are intended for use in waveguide transmission lines for the switching of transmitters, receivers, and antennas, in a waveguide connected system.

6.2 Acquisition requirements. Acquisition documents must specify the following:

a. Title, number, and date of this specification.

b. Title, number, and date of the applicable specification sheet and PIN.

c. Packing requirements (see 5.1).

6.3 Subject term (key word) listing.

Alloy	Forgings
Aluminum	Fungus inert
Castings	Holding current
Connector	Interlock
Corrosion-resistant	Isolation
Cycle life	Manually
Dielectric withstanding voltage	Plate
Dissimilar metals	Pull-in voltage
Dropout voltage	Radio frequency
Electromechanically	Rotor
Fail-safe	Run-in
Flanges	VSWR

6.4 Definitions. For the purpose of this specification, the following definitions apply:

6.4.1 Dropout voltage. The dropout voltage is defined as the minimum operating voltage at which the switch returns to the deenergized position.

6.4.2 Fail-safe switch. A fail-safe switch is defined as a switch with an actuator that contains a spring return mechanism that provides RF connection to one selected position when no dc or ac voltage is applied to the switch. This type of switch requires continuous voltage to maintain RF connection to any other position.

6.4.3 Holding current. The holding current is defined as the current required to hold the switch in position after the RF contacts have completely transferred.

6.4.4 Indicating circuit. An indicating circuit is a circuit that remotely indicates the switch position. This is normally done with indicator lights. The indicating circuit is a set of contacts controlled by the same shaft as the RF switch.

6.4.5 Latching switch. A latching switch is defined as a switch that contains a mechanism, either mechanical or magnetic, that will maintain a chosen RF position. This is with or without voltage being maintained after the switching action is completed.

6.4.6 Pull-in voltage. The pull-in voltage is defined as the minimum operating voltage at which the switch contacts assume the energized position.

6.4.7 Rotor motion delay. The rotor motion delay is defined as the time between application of the switching voltage and the beginning of rotor motion.

6.4.8 Switching time. The switching time is defined as beginning when the dc operating voltage is first applied and ending when the switch RF signal reaches its steady-state value. Switching time consists of the following time elements:

a. Inductive delay time in the actuator coil.

b. Transfer time of the RF contacts.

c. Bounce time of the RF contacts.

6.4.9 Transfer switch. A transfer switch is defined as a switch with four-port and provides two independent pairs of RF paths. These pairs are actuated simultaneously.

6.4.10 Operating current. The operating current is that current required for satisfactory operation of the switch. The value of the current is normally specified for operation at room ambient temperature.

6.4.11 Interlock circuits. An interlock circuit is designed into a latching type of switch. The switch will remain in the last position, until the switch is re-energized.

6.4.12 Fungus inert. Use guideline 4 of MIL-HDBK-454 for guidance in determining compliance with requirements that switches use fungus inert materials in construction.

6.5 Occupational Safety and Health Administration (OSHA). OSHA review completed; no further review required.

6.6 Cleaning and drying. Waveguide switches should be cleaned in accordance with MIL-STD-2073-1. Waveguide switches should be dried in accordance with MIL-STD-2073-1. Contact preservatives should not be used.

6.7 Tin whisker growth. The use of alloys with tin content greater than 97 percent, by mass, may exhibit tin whisker growth problems after manufacture. Tin whiskers may occur anytime from a day to years after manufacture and can develop under typical operating conditions, on products that use such materials. Conformal coatings applied over top of a whisker-prone surface will not prevent the formation of tin whiskers. Alloys of 3 percent lead, by mass, have shown to inhibit the growth of tin whiskers. For additional information on this matter, refer to ASTM-B545 (Standard Specification for Electrodeposited Coatings of Tin).

6.8 Environmentally preferable material. Environmentally preferable materials should be used to the maximum extent possible to meet the requirements of this specification. As of the dating of this document, the U.S. Environmentally Protection Agency (EPA) is focusing efforts on reducing 31 priority chemicals. The list of chemicals and additional information is available on their website at http://www.epa.gov/osw/hazard/wastemin/priority.htm. Included in the list of 31 priority chemicals are cadmium, lead, and mercury. Use of the materials on the list should be minimized or eliminated unless needed to meet the requirements specified herein (see section 3).

6.9 Changes from previous issue. The margins of this specification are marked with vertical lines to indicate where changes from the previous revisions were made. This was done as a convenience only and the Government assumes no liability whatsoever for any inaccuracies in these notations. Bidders and contractors are cautioned to evaluate the requirements of this document based on the entire content irrespective of the marginal notations and relationship to the last previous issue.

APPENDIX A

GROUP FIRST ARTICLE APPROVAL

A.1 SCOPE

A.1.1 Scope. This appendix provides manufacturers a grouping that can be used to obtain first article approval for a number of items by obtaining first article approval for one item in a group. The grouping shall be in accordance with the following table. Manufacturers may obtain first article approval at a lower frequency range than listed in the table. This will satisfy first article approval for switches with the stated characteristics in a group from this frequency range down to the lowest frequency range specified.

A.1.2 Group first article approval. Group first article approval of switches having requirements for interlock circuit, rotor motion delay, transient interference, RF energy leakage, pressure, explosion or Salt atmosphere is not permitted unless these tests are performed on the first article approved switch.

TABLE A-I. Grouping for first article approval.

Group number	Characteristics of first article approved switch	Characteristics of switches first article approved
1	Rectangular waveguide Choke face Fail-safe With indicator Frequency range 1.7-2.6 GHz Screened DC or AC energizing voltage 1P2T	Rectangular waveguide Choke or cover face Fail-safe or latching With or without indicator Frequency ranges 1.7-2.6 GHz to .32-.49 GHz Screened or nonscreened DC or AC energizing voltage or manual 1P1T or 1P2T
2	Rectangular waveguide Choke face Fail-safe With indicator Frequency range 1.7-2.6 GHz Nonscreened DC or AC energizing voltage 1P2T	Rectangular waveguide Choke or cover face Fail-safe or latching With or without indicator Frequency ranges 1.7-2.6 GHz to .32-.49 GHz Nonscreened DC or AC energizing voltage or manual 1P1T or 1P2T
3	Rectangular waveguide Cover face Fail-safe With indicator Frequency range 1.7-2.6 GHz Screened DC or AC energizing voltage 1P2T	Rectangular waveguide Cover face Fail-safe or latching With or without indicator Frequency ranges 1.7-2.6 GHz to .32-.49 GHz Screened or nonscreened DC or AC energizing voltage or manual 1P1T or 1P2T
4	Rectangular waveguide Cover face Fail-safe With indicator Frequency range 1.7-2.6 GHz Nonscreened DC or AC energizing voltage 1P2T	Rectangular waveguide Cover face Fail-safe or latching With or without indicator Frequency ranges 1.7-2.6 GHz to .32-.49 GHz Nonscreened DC or AC energizing voltage or manual 1P1T or 1P2T

TABLE A-I. Grouping for first article approval - Continued.

Group number	Characteristics of first article approved switch	Characteristics of switches first article approved
5	Rectangular waveguide Cover face Manual Frequency range 1.7-2.6 GHz Screened 1P2T	Rectangular waveguide Cover face Manual Frequency ranges 1.7-2.6 GHz to .32-.49 GHz Screened or nonscreened 1P2T
6	Rectangular waveguide Cover face Manual Frequency range 1.7-2.6 GHz Nonscreened 1P2T	Rectangular waveguide Cover face Manual Frequency ranges 1.7-2.6 GHz to .32-.49 GHz Nonscreened 1P2T
7	Rectangular waveguide Choke face Fail-safe With indicator Frequency range 1.7-2.6 GHz Screened DC or AC energizing voltage 2P2T	Rectangular waveguide Choke or cover face Fail-safe or latching With or without indicator Frequency ranges 1.7-2.6 GHz to .32-.49 GHz Screened or nonscreened DC or AC energizing voltage 2P2T
8	Rectangular waveguide Choke face Fail-safe With indicator Frequency range 1.7-2.6 GHz Nonscreened DC or AC energizing voltage 2P2T	Rectangular waveguide Choke or cover face Fail-safe or latching With or without indicator Frequency ranges 1.7-2.6 GHz to .32-.49 GHz Nonscreened DC or AC energizing voltage 2P2T
9	Rectangular waveguide Cover face Fail-safe With indicator Frequency range 1.7-2.6 GHz Screened DC or AC energizing voltage 2P2T	Rectangular waveguide Cover face Fail-safe or latching With or without indicator Frequency ranges 1.7-2.6 GHz to .32-.49 GHz Screened or nonscreened DC or AC energizing voltage 2P2T
10	Rectangular waveguide Cover face Fail-safe With indicator Frequency range 1.7-2.6 GHz Nonscreened DC or AC energizing voltage 2P2T	Rectangular waveguide Cover face Fail-safe or latching With or without indicator Frequency ranges 1.7-2.6 GHz to .32-.49 GHz Nonscreened DC or AC energizing voltage 2P2T

TABLE A-I. Grouping for first article approval - Continued.

Group number	Characteristics of first article approved switch	Characteristics of switches first article approved
11	Rectangular waveguide Choke face Fail-safe With indicator Frequency range 18-26.5 GHz Screened DC or AC energizing voltage 1P2T	Rectangular waveguide Choke or cover face Fail-safe or latching With or without indicator Frequency ranges 18-26.5 GHz to 2.2-3.3 GHz Screened or nonscreened DC or AC energizing voltage or manual 1P1T or 1P2T
12	Rectangular waveguide Choke face Fail-safe With indicator Frequency range 18-26.5 GHz Nonscreened DC or AC energizing voltage 1P2T	Rectangular waveguide Choke or cover face Fail-safe or latching With or without indicator Frequency ranges 18-26.5 GHz to 2.2-3.3 GHz Nonscreened DC or AC energizing voltage or manual 1P1T or 1P2T
13	Rectangular waveguide Cover face Fail-safe With indicator Frequency range 18-26.5 GHz Screened DC or AC energizing voltage 1P2T	Rectangular waveguide Cover face Fail-safe or latching With or without indicator Frequency ranges 18-26.5 GHz to 2.2-3.3 GHz Screened or nonscreened DC or AC energizing voltage or manual 1P1T or 1P2T
14	Rectangular waveguide Cover face Fail-safe With indicator Frequency range 18-26.5 GHz Nonscreened DC or AC energizing voltage 1P2T	Rectangular waveguide Cover face Fail-safe or latching With or without indicator Frequency ranges 18-26.5 GHz to 2.2-3.3 GHz Nonscreened DC or AC energizing voltage or manual 1P1T or 1P2T
15	Rectangular waveguide Cover face Manual Frequency range 18-26.5 GHz Screened 1P2T	Rectangular waveguide Cover face Manual Frequency ranges 18-26.5 GHz to 2.2-3.3 GHz Screened or nonscreened 1P2T
16	Rectangular waveguide Cover face Manual Frequency range 18-26.5 GHz Nonscreened 1P2T	Rectangular waveguide Cover face Manual Frequency ranges 18-26.5 GHz to 2.2-3.3 GHz Nonscreened 1P2T

TABLE A-I. Grouping for first article approval - Continued.

Group number	Characteristics of first article approved switch	Characteristics of switches first article approved
17	Rectangular waveguide Choke face Fail-safe With indicator Frequency range 18-26.5 GHz Screened DC or AC energizing voltage 2P2T	Rectangular waveguide Choke or cover face Fail-safe or latching With or without indicator Frequency ranges 18-26.5 GHz to 2.2-3.3 GHz Screened or nonscreened DC or AC energizing voltage or manual 2P2T
18	Rectangular waveguide Choke face Fail-safe With indicator Frequency range 18-26.5 GHz Nonscreened DC or AC energizing voltage 2P2T	Rectangular waveguide Choke or cover face Fail-safe or latching With or without indicator Frequency ranges 18-26.5 GHz to 2.2-3.3 GHz Nonscreened DC or AC energizing voltage or manual 2P2T
19	Rectangular waveguide Cover face Fail-safe With indicator Frequency range 18-26.5 GHz Screened DC or AC energizing voltage 2P2T	Rectangular waveguide Cover face Fail-safe or latching With or without indicator Frequency ranges 18-26.5 GHz to 2.2-3.3 GHz Screened or nonscreened DC or AC energizing voltage or manual 2P2T
20	Rectangular waveguide Cover face Fail-safe With indicator Frequency range 18-26.5 GHz Nonscreened DC or AC energizing voltage 2P2T	Rectangular waveguide Cover face Fail-safe or latching With or without indicator Frequency ranges 18-26.5 GHz to 2.2-3.3 GHz Nonscreened DC or AC energizing voltage 2P2T
21	Rectangular waveguide Choke or contact face Fail-safe With indicator Frequency range 220-325 GHz Screened DC or AC energizing voltage 1P2T	Rectangular waveguide Choke, cover, or contact face Fail-safe or latching With or without indicator Frequency ranges 220-325 GHz to 22-33 GHz Screened or nonscreened DC or AC energizing voltage or manual 1P2T or 1P1T
22	Rectangular waveguide Choke or contact face Fail-safe With indicator Frequency range 220-325 GHz Nonscreened DC or AC energizing voltage 1P2T	Rectangular waveguide Choke, contact, or cover face Fail-safe or latching With or without indicator Frequency ranges 220-325 GHz to 22-33 GHz Nonscreened DC or AC energizing voltage or manual 1P1T or 1P2T

TABLE A-I. Grouping for first article approval - Continued.

Group number	Characteristics of first article approved switch	Characteristics of switches first article approved
23	Rectangular waveguide Cover or contact face Fail-safe With indicator Frequency range 220-325 GHz Screened DC or AC energizing voltage 1P2T	Rectangular waveguide Cover or contact face Fail-safe or latching With or without indicator Frequency ranges 220-325 GHz to 22-33 GHz Screened or nonscreened DC or AC energizing voltage or manual 1P1T or 1P2T
24	Rectangular waveguide Cover or contact face Fail-safe With indicator Frequency range 220-325 GHz Nonscreened DC or AC energizing voltage 1P2T	Rectangular waveguide Cover or contact face Fail-safe or latching With or without indicator Frequency ranges 220-325 GHz to 22-33 GHz Nonscreened DC or AC energizing voltage or manual 1P1T or 1P2T
25	Rectangular waveguide Cover or contact face Manual Frequency range 220-325 GHz Screened 1P2T	Rectangular waveguide Cover or contact face Manual Frequency ranges 220-325 GHz to 22-33 GHz Screened or nonscreened 1P2T
26	Rectangular waveguide Cover or contact face Manual Frequency range 220-325 GHz Nonscreened 1P2T	Rectangular waveguide Cover or contact face Manual Frequency ranges 220-325 GHz to 22-33 GHz Nonscreened 1P2T
27	Rectangular waveguide Choke or contact face Fail-safe With indicator Frequency range 220-325 GHz Screened DC or AC energizing voltage 2P2T	Rectangular waveguide Choke, contact, or cover face Fail-safe or latching With or without indicator Frequency ranges 220-325 GHz to 22-33 GHz Screened or nonscreened DC or AC energizing voltage 2P2T
28	Rectangular waveguide Choke or contact face Fail-safe With indicator Frequency range 220-325 GHz Nonscreened DC or AC energizing voltage 2P2T	Rectangular waveguide Choke, contact, or cover face Fail-safe or latching With or without indicator Frequency ranges 220-325 GHz to 22-33 GHz Nonscreened DC or AC energizing voltage 2P2T

TABLE A-I. Grouping for first article approval - Continued.

Group number	Characteristics of first article approved switch	Characteristics of switches first article approved
29	Rectangular waveguide Cover or contact face Fail-safe With indicator Frequency range 220-325 GHz Screened DC or AC energizing voltage 2P2T	Rectangular waveguide Cover or contact face Fail-safe or latching With or without indicator Frequency ranges 220-325 GHz to 22-33 GHz Screened or nonscreened DC or AC energizing voltage 2P2T
30	Rectangular waveguide Cover or contact face Fail-safe With indicator Frequency range 220-325 GHz Nonscreened DC or AC energizing voltage 2P2T	Rectangular waveguide Cover or contact face Fail-safe or latching With or without indicator Frequency ranges 220-325 GHz to 22-33 GHz Nonscreened DC or AC energizing voltage 2P2T
31	Double ridge waveguide 2.4:1 ratio Fail-safe With indicator Frequency range 18-40 GHz Screened DC or AC energizing voltage 1P2T	Double or single ridge waveguide 2.4:1 or 3.6:1 ratio Fail-safe or latching With or without indicator Frequency ranges 18-40 GHz to 1.4-5.0 GHz Screened or nonscreened DC or AC energizing voltage or manual 1P1T or 1P2T
32	Double ridge waveguide 2.4:1 ratio Fail-safe With indicator Frequency range 18-40 GHz Nonscreened DC or AC energizing voltage 1P2T	Double or single ridge waveguide 2.4:1 or 3.6:1 ratio Fail-safe or latching With or without latching Frequency ranges 18-40 GHz to 1.4-5.0 GHz Nonscreened DC or AC energizing voltage or manual 1P1T or 1P2T
33	Double ridge waveguide 2.4:1 ratio Fail-safe With indicator Frequency range 1.5-3.6 GHz Screened DC or AC energizing voltage 1P2T	Double or single ridge waveguide 2.4:1 or 3.6:1 ratio Fail-safe or latching With or without indicator Frequency ranges 1.5-3.6 GHz to .108-.39 GHz Screened or nonscreened DC or AC energizing voltage or manual 1P1T or 1P2T
34	Double ridge waveguide 2.4:1 ratio Fail-safe With indicator Frequency range 1.5-3.6 GHz Nonscreened DC or AC energizing voltage 1P2T	Double or single ridge waveguide 2.4:1 or 3.6:1 ratio Fail-safe or latching With or without indicator Frequency ranges 1.5-3.6 GHz to .108-.39 GHz Nonscreened DC or AC energizing voltage or manual 1P1T or 1P2T

TABLE A-I. Grouping for first article approval - Continued.

Group number	Characteristics of first article approved switch	Characteristics of switches first article approved
35	Double ridge waveguide 2.4:1 ratio Manual Frequency range 18-40 GHz Screened 1P2T	Double or single ridge waveguide 2.4:1 or 3.6:1 ratio Manual Frequency ranges 18-40 GHz to 1.4-5.0 GHz Screened or nonscreened 1P2T
36	Double ridge waveguide 2.4:1 ratio Manual Frequency range 18-40 GHz Nonscreened 1P2T	Double or single ridge waveguide 2.4:1 or 3.6:1 ratio Manual Frequency ranges 18-40 GHz to 1.4-5.0 GHz Nonscreened 1P2T
37	Double ridge waveguide 2.4:1 ratio Manual Frequency range 1.5-3.6 GHz Screened 1P2T	Double or single ridge waveguide 2.4:1 or 3.6:1 ratio Manual Frequency ranges 1.5-3.6 GHz to .108-.39 GHz Screened and nonscreened 1P2T
38	Double ridge waveguide 2.4:1 ratio Manual Frequency range 1.5-3.6 GHz Nonscreened 1P2T	Double or single ridge waveguide 2.4:1 or 3.6:1 ratio Manual Frequency ranges 1.5-3.6 GHz to .108-.39 GHz Nonscreened 1P2T
39	Double ridge waveguide 2.4:1 ratio Fail-safe With indicator Frequency range 18-40 GHz Screened DC or AC energizing voltage 2P2T	Double or single ridge waveguide 2.4:1 or 3.6:1 ratio Fail-safe or latching With or without indicator Frequency ranges 18-40 GHz to 1.4-5.0 GHz Screened or nonscreened DC or AC energizing voltage 2P2T
40	Double ridge waveguide 2.4:1 ratio Fail-safe With indicator Frequency range 18-40 GHz Nonscreened DC or AC energizing voltage 2P2T	Double or single ridge waveguide 2.4:1 or 3.6:1 ratio Fail-safe or latching With or without indicator Frequency ranges 18-40 GHz to 1.4-5.0 GHz Nonscreened DC or AC energizing voltage 2P2T

TABLE A-I. Grouping for first article approval - Continued.

Group number	Characteristics of first article approved switch	Characteristics of switches first article approved
41	Double ridge waveguide 2.4:1 ratio Fail-safe With indicator Frequency range 1.5-3.6 GHz Screened DC or AC energizing voltage 2P2T	Double or single ridge waveguide 2.4:1 or 3.6:1 ratio Fail-safe or latching With or without indicator Frequency ranges 1.5-3.6 GHz to .108-.39 GHz Screened or nonscreened DC or AC energizing voltage 2P2T
42	Double ridge waveguide 2.4:1 ratio Fail-safe With indicator Frequency range 1.5-3.6 GHz Nonscreened DC or AC energizing voltage 2P2T	Double or single ridge waveguide 2.4:1 ratio Fail-safe or latching With or without indicator Frequency ranges 1.5-3.6 GHz to .108-.39 GHz Nonscreened DC or AC energizing voltage 2P2T

Custodians:
Army - CR
Navy - EC
Air Force - 85
DLA - CC

Review activities:
Army - AV, MI, SM
Navy - AS, MC, OS, SH
Air Force - 19, 99
DOD - NS

Preparing activity:
DLA - CC

(Project 5985-2012-003)

NOTE: The activities listed above were interested in this document as of the date of this document. Since organizations and responsibilities can change, you should verify the currency of the information above using the ASSIST Online database at https://assist.daps.dla.mil/.